FED. ROAD DIST. NO.	STATE	FEDERAL AID PROJ. NO.	FISCAL YEAR	SHEET NO.	TOTAL SHEETS
HAWAII	HAW.	NH-H1-1(285)	2023	172	287

INDEX TO STRUCTURAL DRAWINGS

SHEET NO.	DESCRIPTION
S0.1	INDEX TO STRUCTURAL DRAWINGS
S0.2	INDEX TO STRUCTURAL DRAWINGS
S0.3	STRUCTURAL GENERAL NOTES
S0.4	SYMBOLS AND ABBREVIATIONS
SA1.1	PEARL CITY VIADUCT KEY PLAN
SA1.2	PEARL CITY VIADUCT KEY PLAN
SA2.1	PEARL CITY VIADUCT IB REPAIR PLAN - SPAN NO. 1 AND SPAN NO. 2
SA2.2	PEARL CITY VIADUCT IB REPAIR PLAN - SPAN NO. 3 AND SPAN NO. 4
SA2.3	PEARL CITY VIADUCT IB REPAIR PLAN - SPAN NO. 5 AND SPAN NO. 6
SA2.4	PEARL CITY VIADUCT IB REPAIR PLAN - SPAN NO. 7 AND SPAN NO. 8
SA2.5	PEARL CITY VIADUCT IB REPAIR PLAN - SPAN NO. 9 TO SPAN NO. 11
SA2.6	PEARL CITY VIADUCT IB REPAIR PLAN - SPAN NO. 12 TO SPAN NO. 14
SA2.7	PEARL CITY VIADUCT IB REPAIR PLAN - SPAN NO. 15 TO SPAN NO. 17
SA2.8	PEARL CITY VIADUCT IB REPAIR PLAN - SPAN NO. 18 TO SPAN NO. 20
SA2.9	PEARL CITY VIADUCT IB REPAIR PLAN - SPAN NO. 21 TO SPAN NO. 23
SA2.10	PEARL CITY VIADUCT IB REPAIR PLAN - SPAN NO. 24 TO SPAN NO. 26
SA2.11	PEARL CITY VIADUCT IB REPAIR PLAN - SPAN NO. 27 TO SPAN NO. 29
SA2.12	PEARL CITY VIADUCT IB REPAIR PLAN - SPAN NO. 30 TO SPAN NO. 32
SA2.13	PEARL CITY VIADUCT IB REPAIR PLAN - SPAN NO. 33 TO SPAN NO. 35
SA2.14	PEARL CITY VIADUCT IB REPAIR PLAN - SPAN NO. 36 TO SPAN NO. 38
SA2.15	PEARL CITY VIADUCT IB REPAIR PLAN - SPAN NO. 39 TO SPAN NO. 41
SA2.16	PEARL CITY VIADUCT IB REPAIR PLAN - SPAN NO. 42 TO SPAN NO. 44
SA2.17	PEARL CITY VIADUCT IB REPAIR PLAN - SPAN NO. 45 TO SPAN NO. 47
SA2.18	PEARL CITY VIADUCT IB REPAIR PLAN - SPAN NO. 48 TO SPAN NO. 50
SA2.19	PEARL CITY VIADUCT IB REPAIR PLAN - SPAN NO. 51 TO SPAN NO. 53
SA2.20	PEARL CITY VIADUCT IB REPAIR PLAN - SPAN NO. 54 TO SPAN NO. 56
SA2.21	PEARL CITY VIADUCT IB REPAIR PLAN - SPAN NO. 57 AND SPAN NO. 58
SA2.22	PEARL CITY VIADUCT IB REPAIR PLAN - SPAN NO. 59 AND SPAN NO. 60
SA2.23	PEARL CITY VIADUCT IB REPAIR PLAN - SPAN NO. 61 AND SPAN NO. 62
SA3.1	PEARL CITY VIADUCT - IB REPAIR SCHEDULES
SA3.2	PEARL CITY VIADUCT - IB REPAIR SCHEDULES
SA3.3	PEARL CITY VIADUCT - IB REPAIR SCHEDULES
SA3.4	PEARL CITY VIADUCT - IB REPAIR SCHEDULES

SHEET NO.	DESCRIPTION
SA3.5	PEARL CITY VIADUCT - IB REPAIR SCHEDULES
SA3.6	PEARL CITY VIADUCT - IB REPAIR SCHEDULES
SA3.7	PEARL CITY VIADUCT - IB REPAIR SCHEDULES
SA3.8	PEARL CITY VIADUCT - IB REPAIR SCHEDULES
SA4.1	PEARL CITY VIADUCT OB REPAIR PLAN - SPAN NO. 1 AND SPAN NO. 2
SA4.2	PEARL CITY VIADUCT OB REPAIR PLAN - SPAN NO. 3 AND SPAN NO. 4
SA4.3	PEARL CITY VIADUCT OB REPAIR PLAN - SPAN NO. 5 AND SPAN NO. 6
SA4.4	PEARL CITY VIADUCT OB REPAIR PLAN - SPAN NO. 7 AND SPAN NO. 8
SA4.5	PEARL CITY VIADUCT OB REPAIR PLAN - SPAN NO. 9 TO SPAN NO. 11
SA4.6	PEARL CITY VIADUCT OB REPAIR PLAN - SPAN NO. 12 TO SPAN NO. 14
SA4.7	PEARL CITY VIADUCT OB REPAIR PLAN - SPAN NO. 15 TO SPAN NO. 17
SA4.8	PEARL CITY VIADUCT OB REPAIR PLAN - SPAN NO. 18 TO SPAN NO. 20
SA4.9	PEARL CITY VIADUCT OB REPAIR PLAN - SPAN NO. 21 TO SPAN NO. 23
SA4.10	PEARL CITY VIADUCT OB REPAIR PLAN - SPAN NO. 24 TO SPAN NO. 26
SA4.11	PEARL CITY VIADUCT OB REPAIR PLAN - SPAN NO. 27 TO SPAN NO. 29
SA4.12	PEARL CITY VIADUCT OB REPAIR PLAN - SPAN NO. 30 TO SPAN NO. 32
SA4.13	PEARL CITY VIADUCT OB REPAIR PLAN - SPAN NO. 33 TO SPAN NO. 35
SA4.14	PEARL CITY VIADUCT OB REPAIR PLAN - SPAN NO. 36 TO SPAN NO. 38
SA4.15	PEARL CITY VIADUCT OB REPAIR PLAN - SPAN NO. 39 TO SPAN NO. 41
SA4.16	PEARL CITY VIADUCT OB REPAIR PLAN - SPAN NO. 42 TO SPAN NO. 44
SA4.17	PEARL CITY VIADUCT OB REPAIR PLAN - SPAN NO. 45 TO SPAN NO. 47
SA4.18	PEARL CITY VIADUCT OB REPAIR PLAN - SPAN NO. 48 TO SPAN NO. 50
SA4.19	PEARL CITY VIADUCT OB REPAIR PLAN - SPAN NO. 51 TO SPAN NO. 53
SA4.20	PEARL CITY VIADUCT OB REPAIR PLAN - SPAN NO. 54 TO SPAN NO. 56
SA4.21	PEARL CITY VIADUCT OB REPAIR PLAN - SPAN NO. 57 AND SPAN NO. 58
SA4.22	PEARL CITY VIADUCT OB REPAIR PLAN - SPAN NO. 59 AND SPAN NO. 60
SA4.23	PEARL CITY VIADUCT OB REPAIR PLAN - SPAN NO. 61 AND SPAN NO. 62

ERIC Y. MATSUMOTO
LICENSED PROFESSIONAL ENGINEER
NO. 10156-S
HAWAII, U.S.A.

THIS WORK WAS PREPARED BY ME OR UNDER MY SUPERVISION.

SIGNATURE — EXPIRATION DATE OF THE LICENSE 4-30-24

STATE OF HAWAII
DEPARTMENT OF TRANSPORTATION
HIGHWAYS DIVISION

INDEX TO STRUCTURAL DRAWINGS

INTERSTATE ROUTE H-1 IMPROVEMENTS
Vicinity of Pearl City Viaduct to Waimalu Viaduct
Federal-Aid Project No. NH-H1-1(285)

Scale: None — Date: May 2023

SHEET No. S0.1 OF 4 SHEETS

ORIGINAL PLAN — NOTE BOOK No. — SURVEY PLOTTED BY — DRAWN BY — TRACED BY — DESIGNED BY — QUANTITIES BY — CHECKED BY — DATE

DRAWING NAME: Z:\OD ONGOING\22-001.B PEARL CITY VIADUCT REPAIRS\01 CAD\05-23-23 1000PCT\PCVR-S0001 INDEX.DWG PLOT TIME: 05-24-23, 9:40 AM

FED. ROAD DIST. NO.	STATE	FEDERAL AID PROJ. NO.	FISCAL YEAR	SHEET NO.	TOTAL SHEETS
HAWAII	HAW.	NH-H1-1(285)	2023	173	287

INDEX TO STRUCTURAL DRAWINGS

SHEET NO.	DESCRIPTION
SA5.1	PEARL CITY VIADUCT - OB REPAIR SCHEDULES
SA5.2	PEARL CITY VIADUCT - OB REPAIR SCHEDULES
SA5.3	PEARL CITY VIADUCT - OB REPAIR SCHEDULES
SA5.4	PEARL CITY VIADUCT - OB REPAIR SCHEDULES
SA5.5	PEARL CITY VIADUCT - OB REPAIR SCHEDULES
SA5.6	PEARL CITY VIADUCT - OB REPAIR SCHEDULES
SA6.1	PEARL CITY VIADUCT - OVERLAY LAYOUT PLAN
SA6.2	PEARL CITY VIADUCT - OVERLAY LAYOUT PLAN
SA7.1	PEARL CITY VIADUCT - IB TYPICAL DECK SECTION
SA72	PEARL CITY VIADUCT - OB TYPICAL DECK SECTIONS
SA8.1	PEARL CITY VIADUCT - PARTIAL DEPTH CONCRETE DECK REPAIR DETAILS
SA8.2	PEARL CITY VIADUCT - REBAR REPAIR DETAILS
SA9.1	PEARL CITY VIADUCT - HPC OVERLAY DETAILS
SA9.2	PEARL CITY VIADUCT - HPC OVERLAY DETAILS
SA9.3	PEARL CITY VIADUCT - IB DECK DRAIN DETAILS
SA9.4	PEARL CITY VIADUCT - IB DI FRAME DETAILS
SA9.5	PEARL CITY VIADUCT - IB DI GRATE DETAILS
SA9.6	PEARL CITY VIADUCT - OB DECK DRAIN DETAILS
SA9.7	PEARL CITY VIADUCT - OB DI FRAME DETAILS
SA9.8	PEARL CITY VIADUCT - OB DI GRATE DETAILS
SA9.9	PEARL CITY VIADUCT - SURFACE TREATMENT AND PENETRATING SEALER DETAILS
SA10.1	PEARL CITY VIADUCT - EXISTING EXPANSION JOINT SEAL DETAILS
SA10.2	PEARL CITY VIADUCT - EXISTING EXPANSION JOINT DETAILS
SA10.3	PEARL CITY VIADUCT - EXISTING EXPANSION JOINT DETAILS
SA10.4	PEARL CITY VIADUCT - NEW EXPANSION JOINT COMPRESSION SEAL DETAILS
SA10.5	PEARL CITY VIADUCT - NEW EXPANSION JOINT COMPRESSION SEAL DETAILS
SA11.1	PEARL CITY VIADUCT - CONSTRUCTION SEQUENCE
SB1.1	WAIMALU VIADUCT KEY PLAN

SHEET NO.	DESCRIPTION
SB2.1	WAIMALU VIADUCT - IB REPAIR PLAN
SB2.2	WAIMALU VIADUCT - OB REPAIR PLAN
SB3.1	WAIMALU VIADUCT - OVERLAY LAYOUT PLAN
SB4.1	WAIMALU VIADUCT - IB DECK SECTION AND DETAIL
SB4.2	WAIMALU VIADUCT - IB BEAM "B" SECTIONS
SB4.3	WAIMALU VIADUCT - OB DECK SECTION
SB4.4	WAIMALU VIADUCT - OB BEAM "B" SECTION
SB4.5	WAIMALU VIADUCT - OB BEAM "D" SECTION
SB4.6	WAIMALU VIADUCT - OB BEAM "D" SECTION BETWEEN GIRDERS
SB4.7	WAIMALU VIADUCT - OB BEAM "D" SECTION AT GIRDERS
SB5.1	WAIMALU VIADUCT FULL DEPTH CONCRETE DECK REPAIR SECTIONS
SB5.2	WAIMALU VIADUCT FULL DEPTH CONCRETE DECK REPAIR DETAILS
SB6.1	WAIMALU VIADUCT - SURFACE TREATMENT DETAILS
SB6.2	WAIMALU VIADUCT - HPC OVERLAY DETAILS
SB6.3	WAIMALU VIADUCT - HPC OVERLAY TRANSITION DETAILS
SB6.4	WAIMALU VIADUCT - IB DECK DRAIN DETAILS
SB6.5	WAIMALU VIADUCT - IB DI FRAME DETAILS
SB6.6	WAIMALU VIADUCT - IB DI GRATE DETAILS
SB6.7	WAIMALU VIADUCT - OB DECK DRAIN DETAILS
SB6.8	WAIMALU VIADUCT - OB DI GRATE DETAILS
SB6.9	WAIMALU VIADUCT - OB DI FRAME DETAILS
SB6.10	WAIMALU VIADUCT - OB DI FRAME DETAILS
SB6.11	WAIMALU VIADUCT - OB DI GRATE DETAILS
SB7.1	WAIMALU VIADUCT - EXISTING EXPANSION JOINT SEAL DETAILS
SB7.2	WAIMALU VIADUCT - EXISTING EXPANSION JOINT DETAILS
SB7.3	WAIMALU VIADUCT - NEW EXPANSION JOINT COMPRESSION SEAL DETAILS
SB7.4	WAIMALU VIADUCT - NEW EXPANSION JOINT COMPRESSION SEAL DETAILS
SB8.1	WAIMALU VIADUCT - CONSTRUCTION SEQUENCE

ERIC Y. MATSUMOTO
LICENSED PROFESSIONAL ENGINEER
NO. 10156-S
HAWAII, U.S.A.

THIS WORK WAS PREPARED BY ME OR UNDER MY SUPERVISION.

SIGNATURE — EXPIRATION DATE OF THE LICENSE 4-30-24

STATE OF HAWAII
DEPARTMENT OF TRANSPORTATION
HIGHWAYS DIVISION

INDEX TO STRUCTURAL DRAWINGS

INTERSTATE ROUTE H-1 IMPROVEMENTS
Vicinity of Pearl City Viaduct to Waimalu Viaduct
Federal-Aid Project No. NH-H1-1(285)

Scale: None — Date: May 2023

SHEET No. S0.2 OF 4 SHEETS

ORIGINAL PLAN — SURVEY PLOTTED BY — DRAWN BY — TRACED BY — DESIGNED BY — QUANTITIES BY — CHECKED BY — DATE
NOTE BOOK No.

DRAWING NAME: Z:\OD ONGOING\22-001.B PEARL CITY VIADUCT REPAIRS\01 CAD\05-23-23 1000PCT\PCVR-S0001 INDEX.DWG PLOT TIME: 05-24-23, 9:40 AM

FED. ROAD DIST. NO.	STATE	FEDERAL AID PROJ. NO.	FISCAL YEAR	SHEET NO.	TOTAL SHEETS
HAWAII	HAW.	NH-H1-1(285)	2023	174	287

STRUCTURAL GENERAL NOTES:

1. General Specifications:

   A. Hawaii Department of Transportation (HDOT), Standard Specifications for Road and Bridge Construction 2005, together with Special Provisions prepared for this project.

2. Materials:

   A. Very Early Strength Latex Modified Concrete (VESLMC) shall produce a rapid-setting material capable of achieving 3000 psi compressive strength within 3 hours. See Section 682 - DEFECTIVE CONCRETE REPAIRS of the Special Provisions.

   B. A penetrating sealer shall be used to fill cracks on the existing bridge deck and shall rapidly cure to allow return to traffic within 3 hours. See Section 683 - PENETRATING SEALER FOR BRIDGE DECKS of the Special Provisions.

   C. Hybrid Polymer Concrete (HPC) shall cure for a minimum of 3 hours and achieve a minimum compressive strength of 1500 psi at 24 hours. See Section 678 - HYBRID POLYMER CONCRETE (HPC) of the Special Provisions.

   D. Surface treatment shall produce an impermeable layer on top of the existing bridge deck and shall rapidly cure to allow return to traffic within 3 hours. See Section 680 - SURFACE TREATMENT of the Special Provisions.

3. Reinforcement:

   A. Unless otherwise noted, the clear covering measured from the surface of the concrete to the face of any reinforcing steel bars shall be as follows:

      (1) Deck

         a) Top bars = 1 1/2"

      (2) All others = 2"

   B. Reinforcing steel shall conform to ASTM A706 W, Grade 60 deformed bars unless otherwise noted.

   C. Minimum clear spacing between parallel bars shall be 1 1/2 times the maximum size of the coarse aggregate or 1 1/2", whichever is greater, except when bundled.

   D. Reinforcing bars shall be placed and installed in accordance with the CRSI Manual of Standard Practice and CRSI Placing Reinforcing Bars, unless otherwise noted.

   E. Existing reinforcing shall not be damaged during demolition work, unless otherwise permitted.

   F. Reinforcing bars shall be securely tied at all intersections and lap splices except where the spacing of the intersections is less than 12" in each direction, in which case alternate intersections shall be tied.

3. Reinforcement (Cont.):

   G. Unless otherwise noted, reinforcing splices shall be staggered. Minimum distance between staggered lap splice shall be equal to the length required for the lap splice. Number of bars spliced at sections normal to axis of member shall not exceed 50 percent of the total main reinforcing in the member.

   H. Minimum lap splice length for steel reinforcing shall be 40 bar diameters or 2'-0", whichever is greater, unless otherwise noted. Increase lap length by 1.3 for bars having more than 12" of fresh concrete below bars.

4. General Construction Notes:

   A. Deck Condition Survey: The Contractor shall confirm the condition of the bridge decks shown on the plans by visual examination and sounding methods in accordance with ASTM D4580. The roadway plans shall be used as a guide to illustrate the general location of the areas to be repaired. Mark the limits on portions of deck to be repaired for approval by the Engineer. The Engineer may direct the Contractor to do repairs outside of the marked areas.

   B. The Contractor shall be responsible for obtaining As-Builts of the existing structures. As-built plans of the existing City and County structures are available for review from the City and County of Honolulu, Department of Design and Construction, Civil Division, Bridge & Structures Section, 650 S. King Street, Honolulu, HI 96813. As-Built plans of the existing HDOT structures are available for review from the Highways Design Branch located at the State Department of Transportation, Highway Division, Kakuhihewa Building, Room 809, 601 Kamokila Boulevard, Kapolei, Hi 96707. The Contractor shall verify all dimensions and site conditions and shall report any discrepancies in writing to the Engineer before commencing work or ordering materials.

   C. The Contractor shall verify all site conditions and not rely upon these plans for existing viaduct azimuths, stream channel locations, roads, roadway gutters, curbs and sidewalks, etc. Conditions may differ from those shown.

   D. The Contractor shall be solely responsible for the protection of adjacent properties, utilities and existing and new structures from damage due to construction. Repairing any damage shall be at the Contractor's own expenses, to the satisfaction of the Engineer.

   E. Unless otherwise noted, all vertical dimensions are measured plumb.

   F. Unless otherwise noted, all exposed concrete surfaces shall be chamfered 3/4" x 3/4".

   G. If the Contractor removes sound concrete more than 50% depth of the existing concrete bridge deck, then the Contractor will be responsible for performing a full depth repair upon approval of the Engineer at no increase in contract time and price. The Contractor shall provide full depth repair details and traffic control for approval.

4. General Construction Notes (Cont.):

   H. The project consists of full depth replacement of the existing concrete deck of Waimalu Viaduct. The thickness of the repair shall match the existing deck thickness. Bottom of repair shall extend to top of existing girder as shown.

   I. The Contractor shall submit working drawings and calculations for the proposed formwork details needed during full depth concrete repairs. All drawings and calculations shall be stamped by a State of Hawaii licensed Structural Engineer. The drawings and calculations shall be found acceptable by the Engineer before any construction work is to proceed.

   J. Do not remove concrete adjacent to previously placed VESLMC until previously placed VESLMC has cured for a minimum of 24 hours.

   K. Construction layout lines shall not interfere with the Zipper guideline. When the guideline is damaged, removed, or overlaid during construction, the Contractor shall re-establish the guideline prior to the nightly deployment of the Zipper barrier.

   L. Unless otherwise noted, all exposed HPC surfaces shall be chamfered 1/4" x 1/4".

   M. All phases of construction shall not interfere with Zipper operations.

   N. Construction Sequence, See SA11.1 and SB8.1.

ERIC Y. MATSUMOTO
LICENSED PROFESSIONAL ENGINEER
NO. 10156-S
HAWAII, U.S.A.

THIS WORK WAS PREPARED BY ME OR UNDER MY SUPERVISION.

SIGNATURE — EXPIRATION DATE OF THE LICENSE 4-30-24

STATE OF HAWAII
DEPARTMENT OF TRANSPORTATION
HIGHWAYS DIVISION

STRUCTURAL GENERAL NOTES

INTERSTATE ROUTE H-1 IMPROVEMENTS
Vicinity of Pearl City Viaduct to Waimalu Viaduct
Federal-Aid Project No. NH-H1-1(285)

Scale: None — Date: May 2023

SHEET No. S0.3 OF 4 SHEETS

ORIGINAL PLAN — SURVEY PLOTTED BY — DRAWN BY — TRACED BY — DESIGNED BY — QUANTITIES BY — CHECKED BY — DATE
NOTE BOOK No.

DRAWING NAME: Z:\00 ONGOING\22-0018 PEARL CITY VIADUCT REPAIRS\01 CAD\05-23-23 100PCT\PCVR-S0003 GENNOTES.DWG PLOT TIME: 05-24-23, 9:41 AM

FED. ROAD DIST. NO.	STATE	FEDERAL AID PROJ. NO.	FISCAL YEAR	SHEET NO.	TOTAL SHEETS
HAWAII	HAW.	NH-H1-1(285)	2023	175	287

SYMBOLS AND ABBREVIATIONS

⅊	And
@	At
Ø	Diameter
≥	Greater Than or Equal to
≤	Less Than or Equal to
#	Number
℄	Baseline
℄	Center line
∠	Angle
AB	Anchor Bolt
Abut.	Abutment
Abbr.	Abbreviation
AC	Asphaltic Concrete
Add.	Additional
Alt.	Alternate
Approx.	Approximate
Az.	Azimuth
Bal.	Balance
Bet.	Between
BF	Both Faces
BFE	Bottom of Footing Elevation
Bk.	Back
Blt.	Bolt
Bm.	Beam
BOF	Bottom of Footing
Bot., Bott., B	Bottom
Br.	Bridge
Brg., Brgs.	Bearing, Bearings
BVC	Beginning of Vertical Curve
BW	Both Ways
Cant.	Cantilever
CBW	Concrete Barrier Wall
cc	Center to Center
CF	Cubic Feet
CFCW	Continuous Flashing Compound Waterproofing
CG	Center of Gravity
CIP	Cast Iron Pipe, Cast in Place
CJ	Construction Joint
Cl.	Class
Clr.	Clearance
CLSM	Controlled Low Strength Material
CMU	Concrete Masonry Unit
Cntl. Jt.	Control Joint
CO	Clean Out
Col.	Column
Conc.	Concrete
Conn.	Connection
Const.	Construction
Cont.	Continuous
CSL	Crosshole Sonic Logging
CRM	Cement Rubble Masonry
CY, Cu. Yd.	Cubic Yard
Dbl.	Double
Demol.	Demolition
Det.	Detail
DI	Drain Inlet, Ductile Iron
Dia.	Diameter
Diaph.	Diaphragm
Dim.	Dimension
Dist.	Distance
Dn.	Down
DO	Ditto
DS	Drilled Shaft
Dwg., Dwgs.	Drawing, Drawings
Dwls.	Dowels
e	Existing
E	East
EA, Ea., ea.	Each
EF	Each Face
EFH	Each Face Horizontal
EFV	Each Face Vertical
EJ	Expansion Joint
El., Elev.	Elevation
Elec.	Electrical
Emb.	Embankment
EMH	Electrical Manhole
EPE	Existing Edge of Pavement
EPS	Expanded Polystyrene
Eq.	Equal
ES	Edge of Shoulder
Est.	Estimated
EVC	End of Vertical Curve
EW	Each Way
Exc.	Excavation
Excl.	Excluding
Exist., Ex.	Existing
Exp., (E)	Expansion
Ext.	Exterior
(F)	Fixed
FA	Force account
FB	Flat Bar
FC	Compression Stresses
f'c	Specified Compressive Strength of Concrete at 28 days
f'ci	Specified Compressive Strength of Concrete at Time of Initial Prestress
FF	Far Face, Front Face
Fig.	Figure
Fin. Gr.	Finish Grade
FRP	Fiberglass Reinforced Polymer
FT	Tensile Stresses
Ft.	Feet, Foot
Ftg.	Footing
G, Gir.	Girder
Ga.	Gage, Gauge
Galv.	Galvanized
GDI	Grated Drain Inlet
GFRP	Glass Fiber Reinforced Polymer Rebar
Gr.	Grade
Grd.	Ground
GRP	Grouted Rubble Pavement
(H)	Hinge
HDPE	High Density Polyethylene
HDOT	State of Hawaii Department of Transportation
HECO	Hawaiian Electric Company
Horiz., H	Horizontal
HPC	Hybrid Polymer Concrete
Ht.	Height
HS	High strength
Hwy.	Highway
IB	Inbound
ID	Inside Diameter
IF	Inside Face
In.	Inch
Int.	Interior
Inv.	Invert
Jt.	Joint
K	Kips
KF	Kip Foot
KLF	Kips Per Linear Foot
KSF	Kips Per Square Foot
KSI, ksi	Kips Per Square Inch
L	Length
lb., lbs., LBS.	Pound, Pounds
LF, Lin. Ft.	Linear Feet/Foot
Longit.	Longitudinal
LS	Lump Sum
Ltg. Std.	Lighting Standard
M	Modified
Max.	Maximum
Mech.	Mechanical
MH	Manhole
Min.	Minimum
Misc.	Miscellaneous
MPH	Miles Per Hour
MSL	Mean Sea Level
N	North
NF	Near Face
NIC	Not in Contract
No.	Number
NTS	Not to Scale
OB	Outbound
oc, o.c.	On Center
OD	Outside Diameter
OG	Outside Girder, Outbound Girder
Opn'g	Opening
O/S	Offset
OHWM	Ordinary High Water Mark
PB	Pull Box
PL	Plate
PCCP	Portland Cement Concrete Pavement
PC	Point of Curvature
PCF	Pounds per Cubic Foot
P(e)	Effective Prestress Force After All Losses
Perf.	Perforated
PI	Point of Intersection of Tangents
PIVC	Point of Intersection of Vertical Curve
PLF, plf	Pounds per Linear Foot
PPM	Parts Per Million
PRC	Point of Reverse Curvature
PVC	Polyvinyl Chloride
Prestr.	Prestressed
P/S	Prestressed Strands
PSF, psf	Pounds per Square Foot
PSI, psi	Pounds per Square Inch
PT	Point of Tangency
Pt., Pts.	Point, Points
R, Rad.	Radius
Rebar	Reinforcing Bar
Ref.	Reference
Reinf.	Reinforced, Reinforcing, Reinforcement
Req'd.	Required
Ret.	Retaining
RF	Rear Face
ROW	Right of Way
Rdwy.	Roadway
S	South
SBD	Special Bridge Deck Mix
SE	Super Elevation
Sect.	Section
SF, sq. ft.	Square Feet
Sht.	Sheet
Sim.	Similar
Sl.	Slope
Spcs., Spg.	Spaces, Spacing
Spec.	Specification
Sprd.	Spread
SRW	Segmental Retaining Wall
SS	Stainless Steel
Std.	Standard
Sta.	Station
Stiff.	Stiffener
Stirr.	Stirrup
Stl.	Steel
Str.	Straight
Struct.	Structure
SY	Square Yard
Symm.	Symmetrical
T	Top
T⅊B	Top and Bottom
Tan.	Tangent
TCE	Top of Column (and Bent Cap Soffit) Elevation
Temp.	Temporary
Term.	Terminal
TFE	Top of Footing Elevation
Thk.	Thick
TOD	Top of Deck
TOP	Top of Pier
Tot.	Total
Transv.	Transverse
TS	Structural Tubing
TSS	Tendon For Girder in Simply Supported Condition
Typ.	Typical
Undergrd.	Underground
Var.	Varies
VC	Vertical Curve
VESLMC	Very Early Strength Latex Modified Concrete
Vert., V	Vertical
W	West
w/	With
W/C	Water/Cementitious
WP	Work Point, Working Point
WS	Water Surface
WW	Wingwall
WWF	Welded Wire Fabric
Yr.	Year

ERIC Y. MATSUMOTO
LICENSED PROFESSIONAL ENGINEER
NO. 10156-S
HAWAII, U.S.A.

THIS WORK WAS PREPARED BY ME OR UNDER MY SUPERVISION.

4-30-24

SIGNATURE EXPIRATION DATE OF THE LICENSE

STATE OF HAWAII
DEPARTMENT OF TRANSPORTATION
HIGHWAYS DIVISION

SYMBOLS AND ABBREVIATIONS

INTERSTATE ROUTE H-1 IMPROVEMENTS
Vicinity of Pearl City Viaduct to Waimalu Viaduct
Federal-Aid Project No. NH-H1-1(285)

Scale: None Date: May 2023

SHEET No. S0.4 OF 4 SHEETS

ORIGINAL PLAN		SURVEY PLOTTED BY	
		DRAWN BY	
NOTE BOOK		TRACED BY	
		DESIGNED BY	
No.		QUANTITIES BY	
		CHECKED BY	

DATE

DRAWING NAME: Z:\OD ORIGINCV\22-0018 PEARL CITY VIADUCT REPAIRS\01 CAD\05-23-23 10\PCV\PCVR-S0004 SYMB-ABBREV.DWG PLOT TIME: 05-24-23, 9:41 AM

FED. ROAD DIST. NO.	STATE	FEDERAL AID PROJ. NO.	FISCAL YEAR	SHEET NO.	TOTAL SHEETS
HAWAII	HAW.	NH-H1-1(285)	2023	176	287

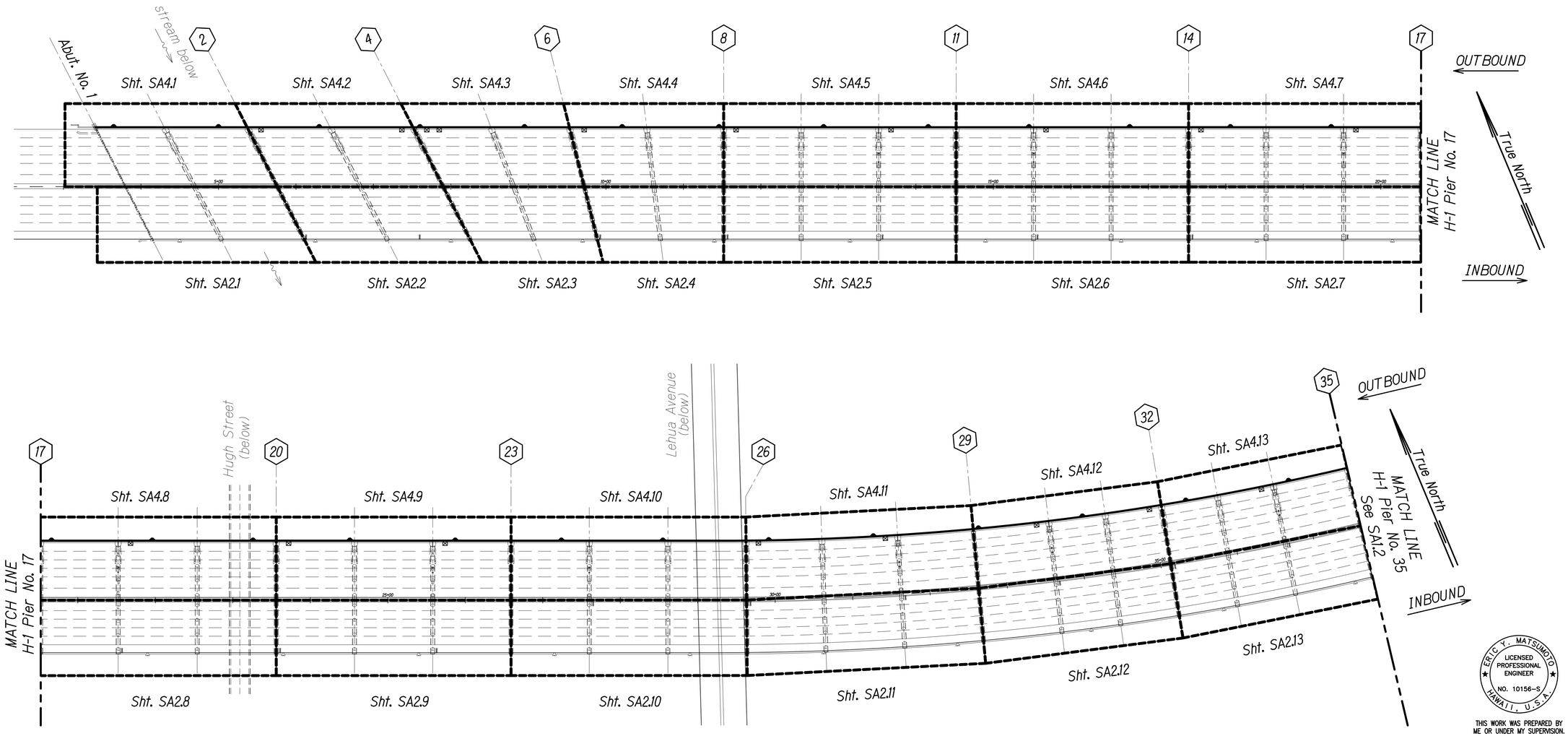

DECK KEY PLAN

Scale: Not to Scale

ORIGINAL PLAN	SURVEY PLOTTED BY	DATE
	DRAWN BY	
NOTE BOOK	TRACED BY	
	DESIGNED BY	
No.	QUANTITIES BY	
	CHECKED BY	

DRAWING NAME: Z:\OD ONGOING\22-0018 PEARL CITY VIADUCT REPAIRS\01 CAD\05-23-23 100PCT\POVR-SA0101 POV KEYPLANS.DWG PLOT TIME: 05-24-23, 9:13 AM

ERIC Y. MATSUMOTO
LICENSED PROFESSIONAL ENGINEER
NO. 10156-S
HAWAII, U.S.A.

THIS WORK WAS PREPARED BY ME OR UNDER MY SUPERVISION.

SIGNATURE — EXPIRATION DATE OF THE LICENSE 4-30-24

STATE OF HAWAII
DEPARTMENT OF TRANSPORTATION
HIGHWAYS DIVISION

PEARL CITY VIADUCT
KEY PLAN

INTERSTATE ROUTE H-1 IMPROVEMENTS
Vicinity of Pearl City Viaduct to Waimalu Viaduct
Federal-Aid Project No. NH-H1-1(285)

Scale: As Noted Date: May 2023

SHEET No. SA1.1 OF 2 SHEETS

FED. ROAD DIST. NO.	STATE	FEDERAL AID PROJ. NO.	FISCAL YEAR	SHEET NO.	TOTAL SHEETS
HAWAII	HAW.	NH-HI-1(285)	2023	177	287

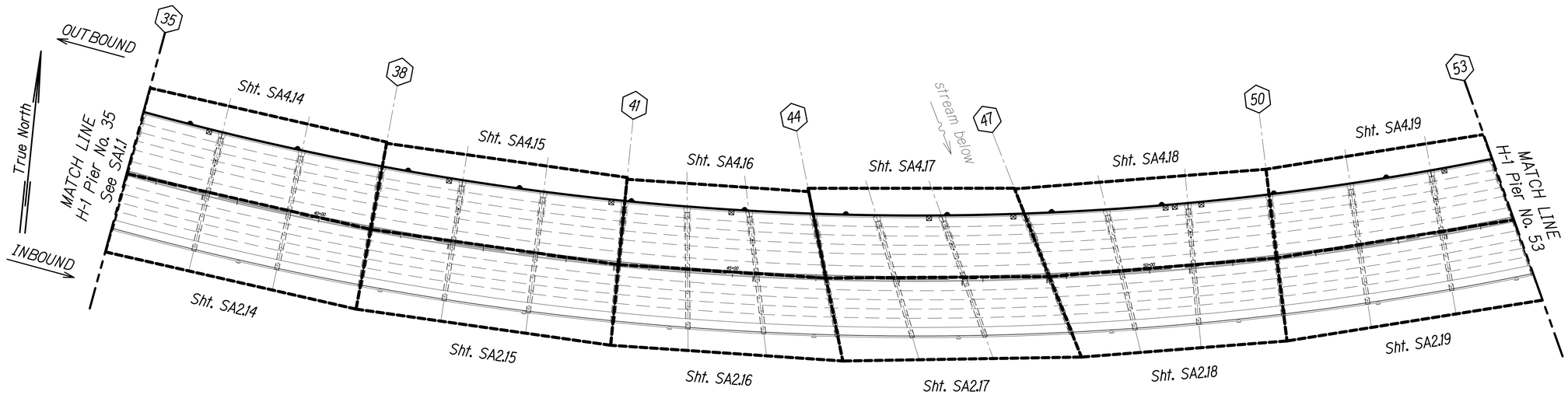

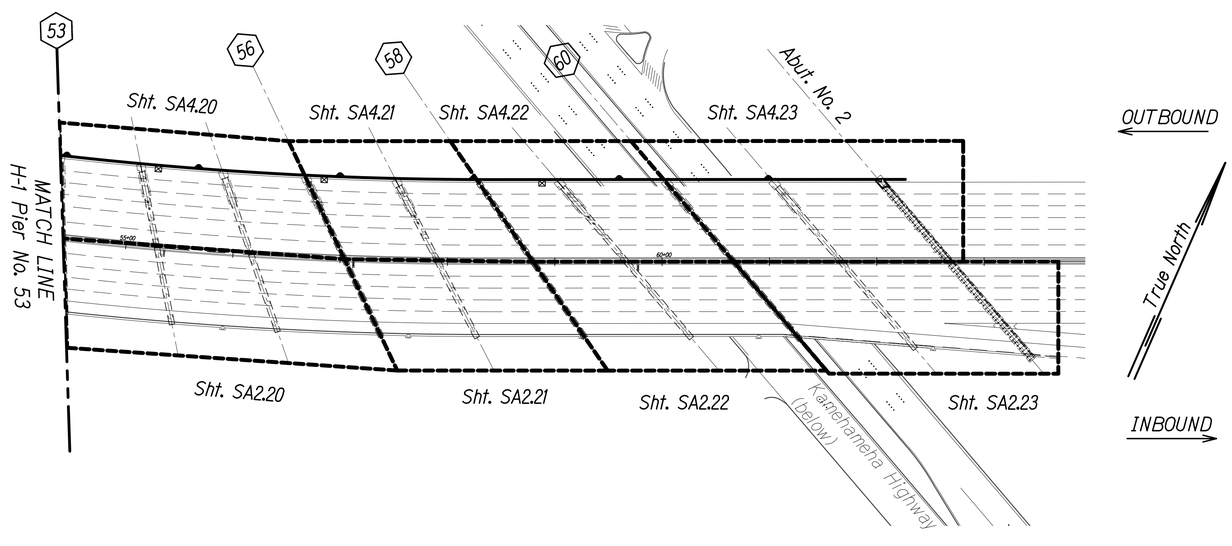

DECK KEY PLAN

Scale: Not to Scale

ORIGINAL PLAN	SURVEY PLOTTED BY	DATE
	DRAWN BY	"
	TRACED BY	"
NOTE BOOK	DESIGNED BY	"
	QUANTITIES BY	"
No.	CHECKED BY	"

DRAWING NAME: Z:\DO ONGOING\22-001.8 PEARL CITY VIADUCT REPAIRS\01 CAD\05-23-23 100PCT\POVR-SA001 PCV KEYPLANS.DWG PLOT TIME: 05-23-23, 3:45 PM

ERIC Y. MATSUMOTO
LICENSED PROFESSIONAL ENGINEER
NO. 10156-S
HAWAII, U.S.A.

THIS WORK WAS PREPARED BY ME OR UNDER MY SUPERVISION.

SIGNATURE — EXPIRATION DATE OF THE LICENSE 6-30-24

STATE OF HAWAII
DEPARTMENT OF TRANSPORTATION
HIGHWAYS DIVISION

PEARL CITY VIADUCT
KEY PLAN

INTERSTATE ROUTE H-1 IMPROVEMENTS
Vicinity of Pearl City Viaduct to Waimalu Viaduct
Federal-Aid Project No. NH-HI-1(285)

Scale: As Noted — Date: May 2023

SHEET No. SA1.2 OF 2 SHEETS

FED. ROAD DIST. NO.	STATE	FEDERAL AID PROJ. NO.	FISCAL YEAR	SHEET NO.	TOTAL SHEETS
HAWAII	HAW.	NH-H1-1(285)	2023	178	287

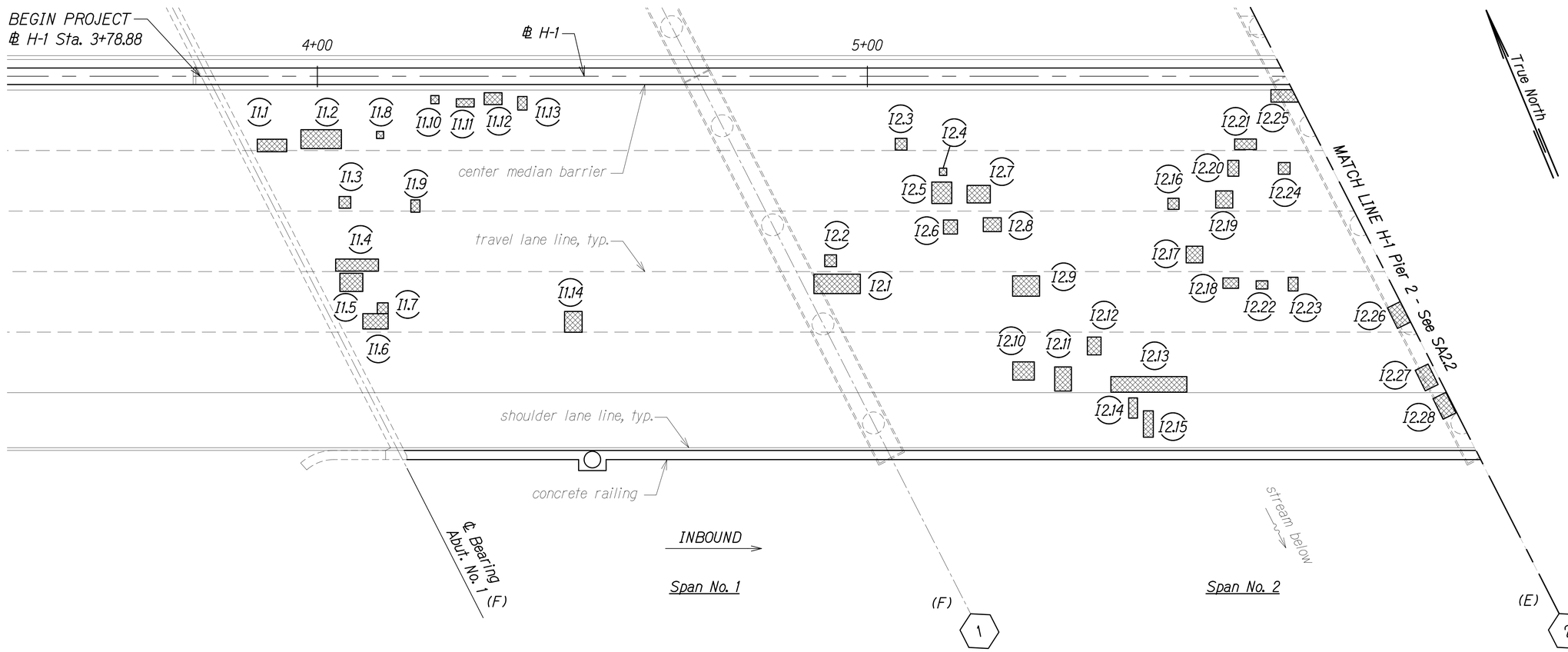

SPAN NO. 1 AND SPAN NO. 2

Scale: 1" = 10'-0"

LEGEND:

- # — Pier No.
- IX.# — Inbound Repair, See Schedules on SA3.1 to SA3.8
  - Defect No.
  - Span No.
  - Inbound
- Repair Area
- (E) Expansion Joint, See Note
- (F) Fixed Joint
- (H) Hinged Joint

NOTE:

All expansion joint compression seals shall be replaced. See SA10.1 to SA10.5.

ERIC Y. MATSUMOTO
LICENSED PROFESSIONAL ENGINEER
NO. 10156-S
HAWAII, U.S.A.

THIS WORK WAS PREPARED BY ME OR UNDER MY SUPERVISION.

SIGNATURE — EXPIRATION DATE OF THE LICENSE 4-30-24

STATE OF HAWAII
DEPARTMENT OF TRANSPORTATION
HIGHWAYS DIVISION

PEARL CITY VIADUCT IB
REPAIR PLAN SPAN NO. 1 AND SPAN NO. 2

INTERSTATE ROUTE H-1 IMPROVEMENTS
Vicinity of Pearl City Viaduct to Waimalu Viaduct
Federal-Aid Project No. NH-H1-1(285)

Scale: As Noted — Date: May 2023

SHEET No. SA2.1 OF 23 SHEETS

ORIGINAL PLAN	SURVEY PLOTTED BY	DATE
	DRAWN BY	
NOTE BOOK	TRACED BY	
	DESIGNED BY	
No.	QUANTITIES BY	
	CHECKED BY	

DRAWING NAME: Z:\00 ONGOING\22-001.8 PEARL CITY VIADUCT REPAIRS\01 CAD\05-23-23 100PCT\PCVR-SA0201 PCV IB DECK REPAIR LAYPLAN.DWG PLOT TIME: 05-23-23, 3:46 PM)

FED. ROAD DIST. NO.	STATE	FEDERAL AID PROJ. NO.	FISCAL YEAR	SHEET NO.	TOTAL SHEETS
HAWAII	HAW.	NH-HI-1(285)	2023	179	287

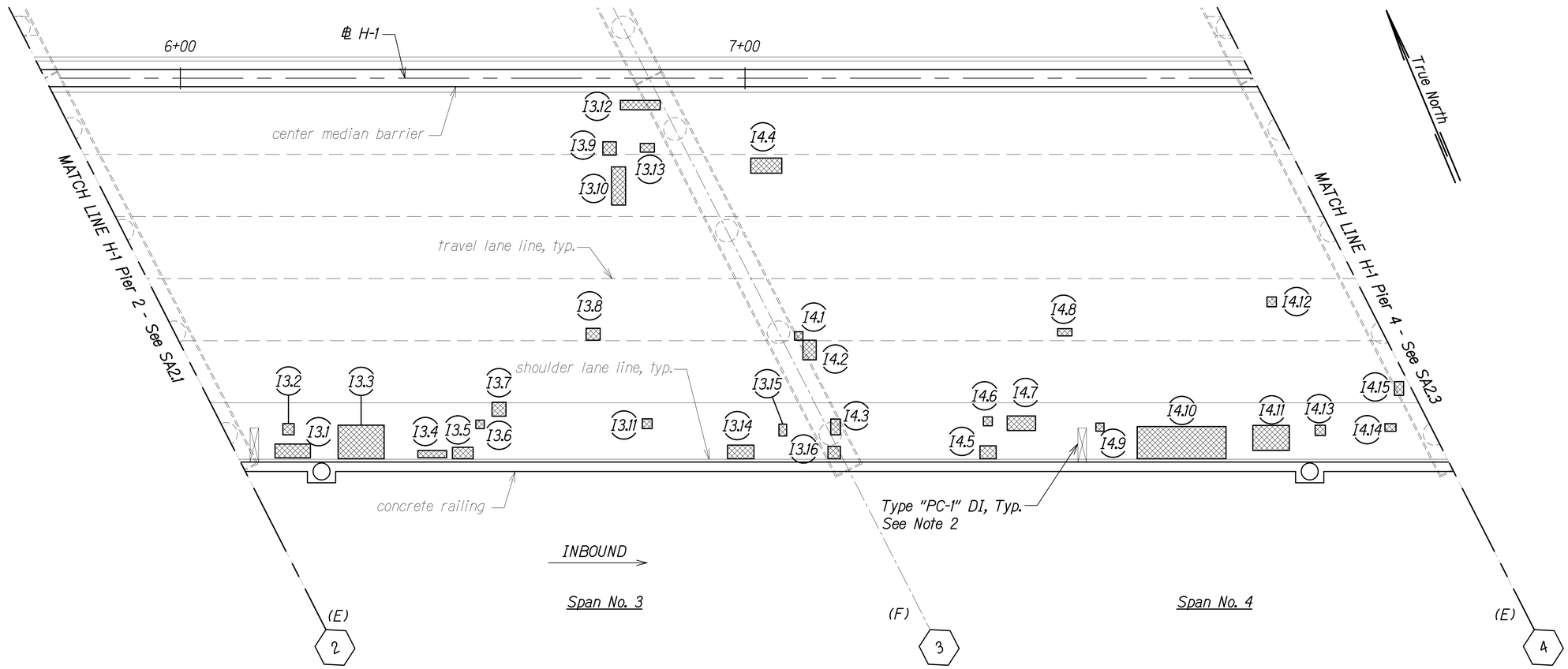

SPAN NO. 3 AND SPAN NO. 4

Scale: 1" = 10'-0"

LEGEND:

- # — Pier No.
- IX.# — Inbound Repair, See Schedules on SA3.1 to SA3.8
  - Defect No.
  - Span No.
  - Inbound
- Repair Area
- (E) Expansion Joint, See Note 1
- (F) Fixed Joint
- (H) Hinged Joint

NOTES:

1. All expansion joint compression seals shall be replaced. See SA10.1 to SA10.5.
2. Drain inlet grates shall be replaced and drain inlet frames shall be raised. See SA9.3 to SA9.5.

ERIC Y. MATSUMOTO
LICENSED PROFESSIONAL ENGINEER
NO. 10156-S
HAWAII, U.S.A.

THIS WORK WAS PREPARED BY ME OR UNDER MY SUPERVISION.

SIGNATURE — EXPIRATION DATE OF THE LICENSE 4-30-24

STATE OF HAWAII
DEPARTMENT OF TRANSPORTATION
HIGHWAYS DIVISION

PEARL CITY VIADUCT IB

REPAIR PLAN SPAN NO. 3 AND SPAN NO. 4

INTERSTATE ROUTE H-1 IMPROVEMENTS
Vicinity of Pearl City Viaduct to Waimalu Viaduct
Federal-Aid Project No. NH-HI-1(285)

Scale: As Noted — Date: May 2023

SHEET No. SA2.2 OF 23 SHEETS

ORIGINAL PLAN | NOTE BOOK No. | SURVEY PLOTTED BY | DRAWN BY | TRACED BY | DESIGNED BY | QUANTITIES BY | CHECKED BY | DATE

DRAWING NAME: Z:\00 ONGOING\22-0018 PEARL CITY VIADUCT REPAIRS\01 CAD\05-23-23 10\PCY\PCVR-SA0201 PCV IB DECK REPAIR LAYPLAN.DWG PLOT TIME: 05-23-23, 3:46 PM)

FED. ROAD DIST. NO.	STATE	FEDERAL AID PROJ. NO.	FISCAL YEAR	SHEET NO.	TOTAL SHEETS
HAWAII	HAW.	NH-H1-1(285)	2023	180	287

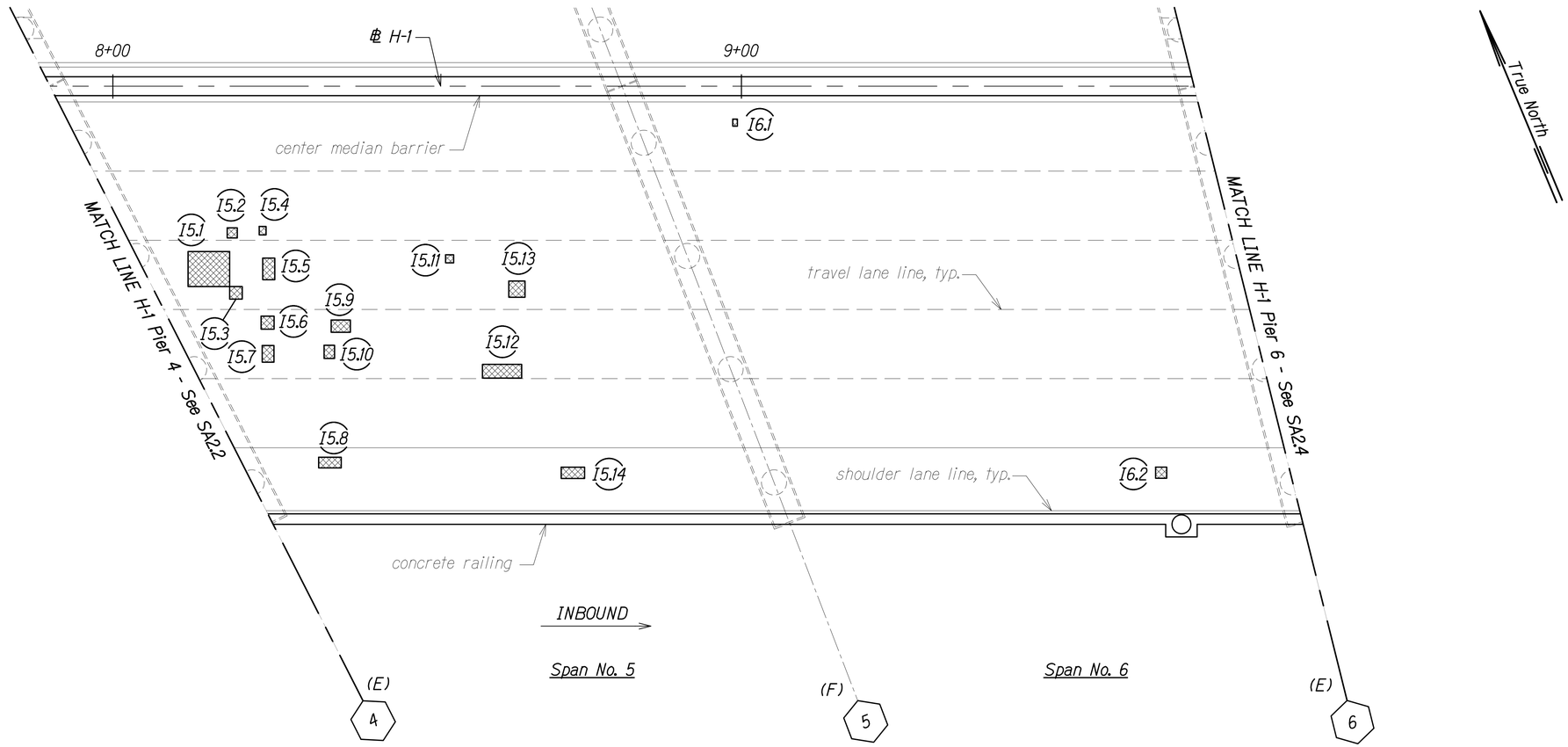

SPAN NO. 5 AND SPAN NO. 6

Scale: 1" = 10'-0"

LEGEND:

- # — Pier No.
- IX.# — Inbound Repair, See Schedules on SA3.1 to SA3.8
  - Defect No.
  - Span No.
  - Inbound
- Repair Area
- (E) Expansion Joint, See Note
- (F) Fixed Joint
- (H) Hinged Joint

NOTE:

All expansion joint compression seals shall be replaced. See SA10.1 to SA10.5.

ERIC Y. MATSUMOTO
LICENSED PROFESSIONAL ENGINEER
NO. 10156-S
HAWAII, U.S.A.

THIS WORK WAS PREPARED BY ME OR UNDER MY SUPERVISION.

SIGNATURE — EXPIRATION DATE OF THE LICENSE 4-30-24

STATE OF HAWAII
DEPARTMENT OF TRANSPORTATION
HIGHWAYS DIVISION

PEARL CITY VIADUCT IB
REPAIR PLAN SPAN NO. 5 AND SPAN NO. 6

INTERSTATE ROUTE H-1 IMPROVEMENTS
Vicinity of Pearl City Viaduct to Waimalu Viaduct
Federal-Aid Project No. NH-H1-1(285)

Scale: As Noted — Date: May 2023

SHEET No. SA2.3 OF 23 SHEETS

ORIGINAL PLAN — SURVEY PLOTTED BY — DRAWN BY — TRACED BY — DESIGNED BY — QUANTITIES BY — CHECKED BY — DATE
NOTE BOOK No.

DRAWING NAME: Z:\OD ONGOING\22-0013 PEARL CITY VIADUCT REPAIRS\01 CAD\05-23-23 100PCT\POR-SA0201 POV IB DECK REPAIR LAYPLAN.DWG PLOT TIME: 05-23-23, 3:46 PM)

FED. ROAD DIST. NO.	STATE	FEDERAL AID PROJ. NO.	FISCAL YEAR	SHEET NO.	TOTAL SHEETS
HAWAII	HAW.	NH-H1-1(285)	2023	181	287

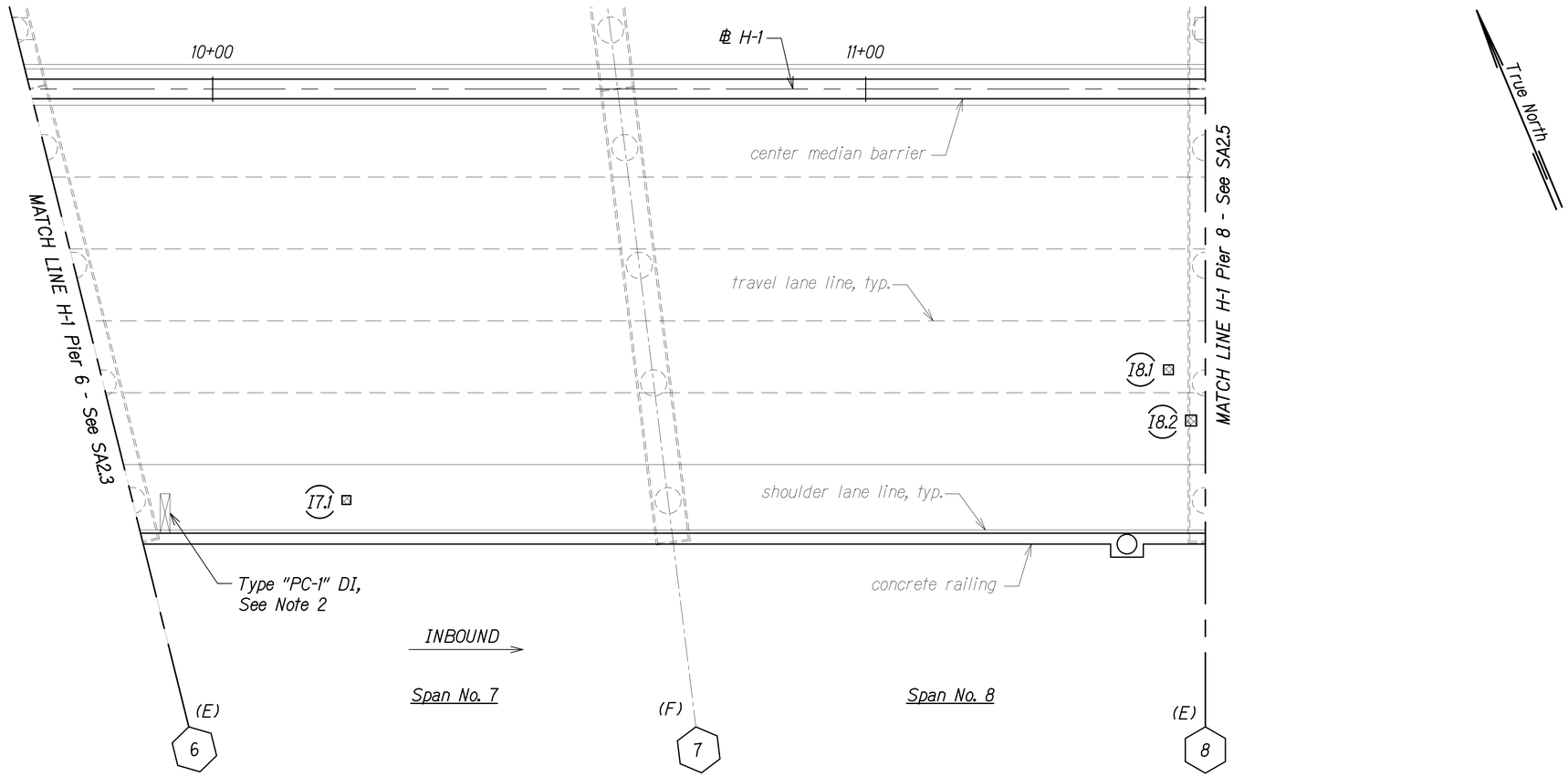

True North

SPAN NO. 7 AND SPAN NO. 8

Scale: 1" = 10'-0"

LEGEND:

- # — Pier No.
- IX.# — Inbound Repair, See Schedules on SA3.1 to SA3.8
  - Defect No.
  - Span No.
  - Inbound
- Repair Area
- (E) Expansion Joint, See Note 1
- (F) Fixed Joint
- (H) Hinged Joint

NOTES:

1. All expansion joint compression seals shall be replaced. See SA10.1 to SA10.5.
2. Drain inlet grates shall be replaced and drain inlet frames shall be raised. See SA9.3 to SA9.5.

ERIC Y. MATSUMOTO
LICENSED PROFESSIONAL ENGINEER
NO. 10156-S
HAWAII, U.S.A.

THIS WORK WAS PREPARED BY ME OR UNDER MY SUPERVISION.

SIGNATURE — EXPIRATION DATE OF THE LICENSE 4-30-24

STATE OF HAWAII
DEPARTMENT OF TRANSPORTATION
HIGHWAYS DIVISION

PEARL CITY VIADUCT IB
REPAIR PLAN SPAN NO. 7 AND SPAN NO. 8
INTERSTATE ROUTE H-1 IMPROVEMENTS
Vicinity of Pearl City Viaduct to Waimalu Viaduct
Federal-Aid Project No. NH-H1-1(285)

Scale: As Noted Date: May 2023

SHEET No. SA2.4 OF 23 SHEETS

ORIGINAL PLAN | SURVEY PLOTTED BY | DRAWN BY | NOTE BOOK | TRACED BY | DESIGNED BY | QUANTITIES BY | CHECKED BY | DATE | No.

DRAWING NAME: Z:\00 ONGOING\22-001.8 PEARL CITY VIADUCT REPAIRS\01 CAD\05-23-23 10PCY\PCVR-SA0201 PCV IB DECK REPAIR LAYPLAN.DWG PLOT TIME: 05-23-23, 3:46 PM

FED. ROAD DIST. NO.	STATE	FEDERAL AID PROJ. NO.	FISCAL YEAR	SHEET NO.	TOTAL SHEETS
HAWAII	HAW.	NH-H1-1(285)	2023	182	287

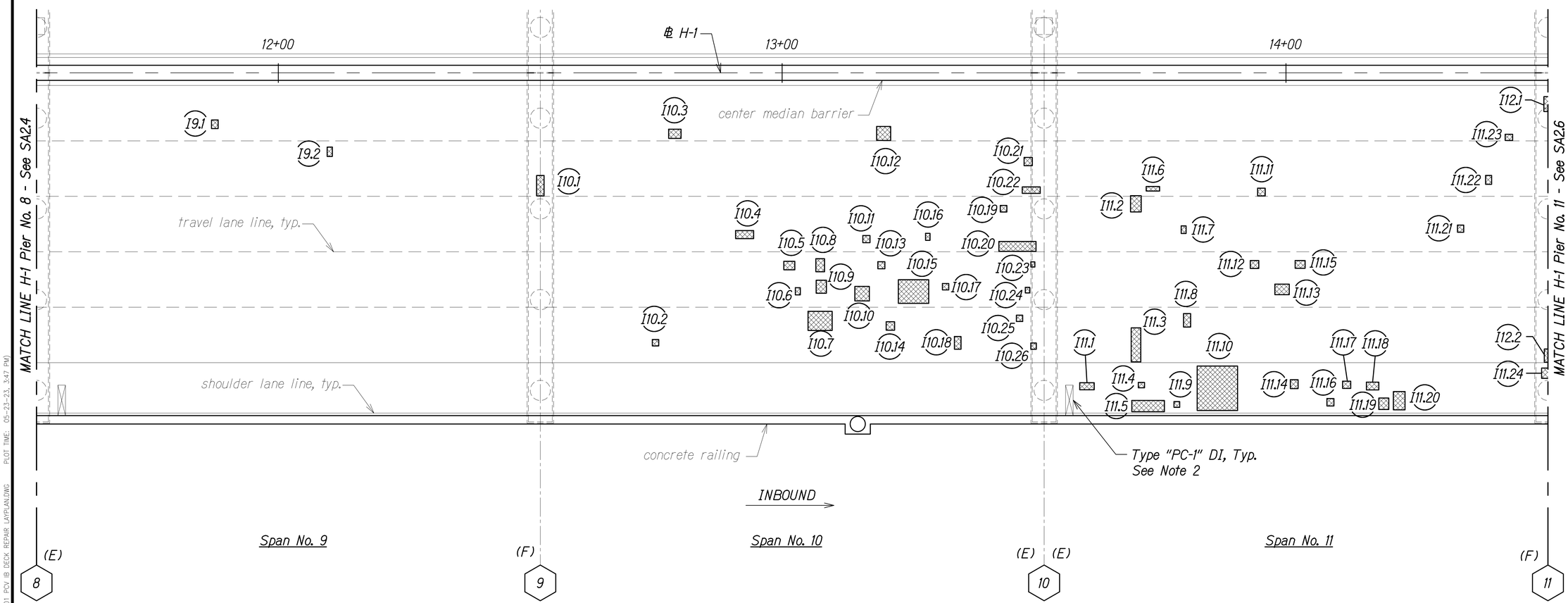

SPAN NO. 9 TO SPAN NO. 11

Scale: 1" = 10'-0"

LEGEND:

- # — Pier No.
- IX.# — Inbound Repair, See Schedules on SA3.1 to SA3.8
  - Defect No.
  - Span No.
  - Inbound
- Repair Area
- (E) Expansion Joint, See Note 1
- (F) Fixed Joint
- (H) Hinged Joint

NOTES:

1. All expansion joint compression seals shall be replaced. See SA10.1 to SA10.5.
2. Drain inlet grates shall be replaced and drain inlet frames shall be raised. See SA9.3 to SA9.5.

ERIC Y. MATSUMOTO
LICENSED PROFESSIONAL ENGINEER
NO. 10156-S
HAWAII, U.S.A.

THIS WORK WAS PREPARED BY ME OR UNDER MY SUPERVISION.

SIGNATURE — EXPIRATION DATE OF THE LICENSE 4-30-24

STATE OF HAWAII
DEPARTMENT OF TRANSPORTATION
HIGHWAYS DIVISION

PEARL CITY VIADUCT IB
REPAIR PLAN SPAN NO. 9 TO SPAN NO. 11

INTERSTATE ROUTE H-1 IMPROVEMENTS
Vicinity of Pearl City Viaduct to Waimalu Viaduct
Federal-Aid Project No. NH-H1-1(285)

Scale: As Noted — Date: May 2023

SHEET No. SA2.5 OF 23 SHEETS

ORIGINAL PLAN — SURVEY PLOTTED BY — DRAWN BY — NOTE BOOK — TRACED BY — DESIGNED BY — QUANTITIES BY — CHECKED BY — No. — DATE

DRAWING NAME: Z:\00 ORIGINCV\22-0018 PEARL CITY VIADUCT REPAIRS\01 CAD\05-23-23 10\PCY\PCVR-SA0201 PCV IB DECK REPAIR LAYPLAN.DWG PLOT TIME: 05-23-23, 3:47 PM

FED. ROAD DIST. NO.	STATE	FEDERAL AID PROJ. NO.	FISCAL YEAR	SHEET NO.	TOTAL SHEETS
HAWAII	HAW.	NH-H1-1(285)	2023	183	287

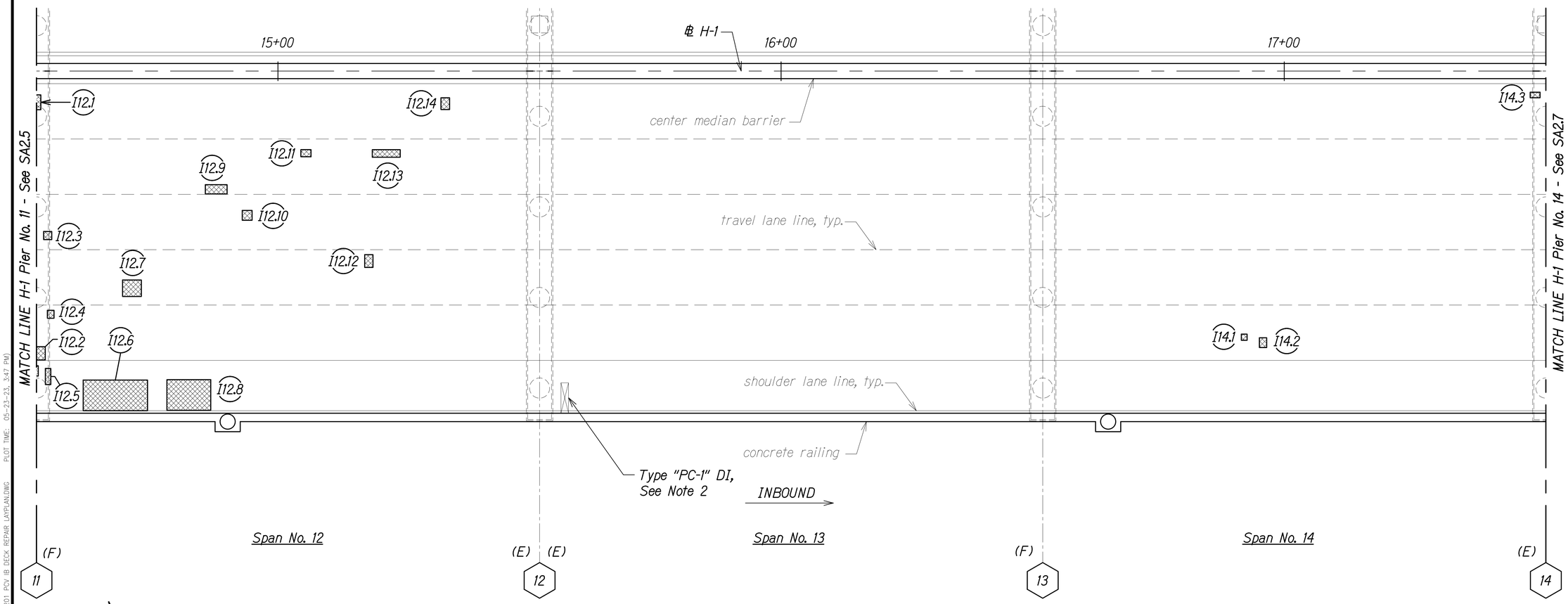

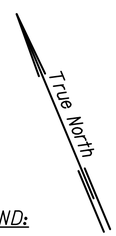

SPAN NO. 12 TO SPAN NO. 14

Scale: 1" = 10'-0"

LEGEND:

- # — Pier No.
- IX.# — Inbound Repair, See Schedules on SA3.1 to SA3.8
  - Defect No.
  - Span No.
  - Inbound
- Repair Area
- (E) Expansion Joint, See Note 1
- (F) Fixed Joint
- (H) Hinged Joint

NOTES:

1. All expansion joint compression seals shall be replaced. See SA10.1 to SA10.5.
2. Drain inlet grates shall be replaced and drain inlet frames shall be raised. See SA9.3 to SA9.5.

ORIGINAL PLAN	SURVEY PLOTTED BY	DATE
	DRAWN BY	
	TRACED BY	
NOTE BOOK	DESIGNED BY	
	DESIGNED BY	
No.	QUANTITIES BY	
	CHECKED BY	

ERIC Y. MATSUMOTO
LICENSED PROFESSIONAL ENGINEER
NO. 10156-S
HAWAII, U.S.A.

THIS WORK WAS PREPARED BY ME OR UNDER MY SUPERVISION.

SIGNATURE — EXPIRATION DATE OF THE LICENSE 4-30-24

STATE OF HAWAII
DEPARTMENT OF TRANSPORTATION
HIGHWAYS DIVISION

PEARL CITY VIADUCT IB

REPAIR PLAN SPAN NO. 12 TO SPAN NO. 14

INTERSTATE ROUTE H-1 IMPROVEMENTS
Vicinity of Pearl City Viaduct to Waimalu Viaduct
Federal-Aid Project No. NH-H1-1(285)

Scale: As Noted — Date: May 2023

SHEET No. SA2.6 OF 23 SHEETS

DRAWING NAME: Z:\OD ONGOING\22-001.B PEARL CITY VIADUCT REPAIRS\01 CAD\05-23-23 100PCT\PCVR-SA0201 PCV IB DECK REPAIR LAYPLAN.DWG PLOT TIME: 05-23-23, 3:47 PM)

FED. ROAD DIST. NO.	STATE	FEDERAL AID PROJ. NO.	FISCAL YEAR	SHEET NO.	TOTAL SHEETS
HAWAII	HAW.	NH-H1-1(285)	2023	184	287

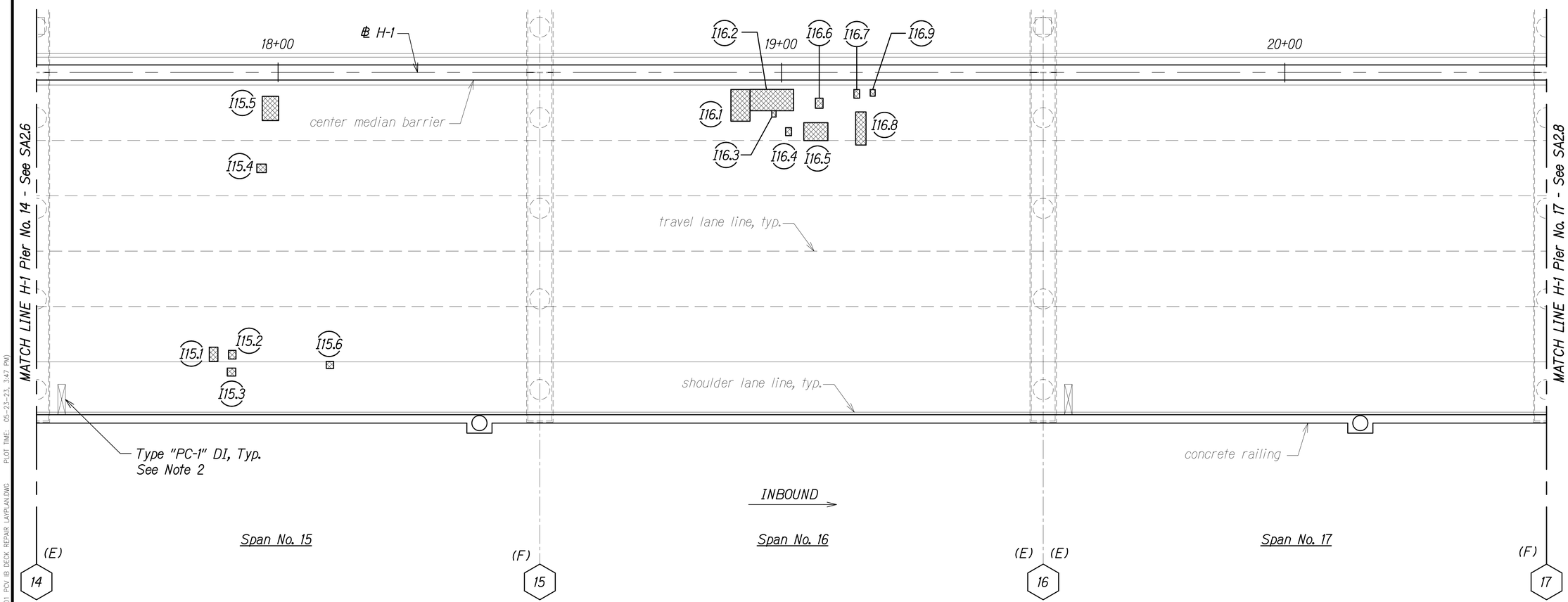

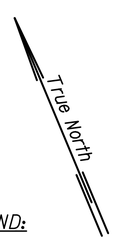

SPAN NO. 15 TO SPAN NO. 17

Scale: 1" = 10'-0"

LEGEND:

- # — Pier No.
- IX.# — Inbound Repair, See Schedules on SA3.1 to SA3.8
  - Defect No.
  - Span No.
  - Inbound
- Repair Area
- (E) Expansion Joint, See Note 1
- (F) Fixed Joint
- (H) Hinged Joint

NOTES:

1. All expansion joint compression seals shall be replaced. See SA10.1 to SA10.5.
2. Drain inlet grates shall be replaced and drain inlet frames shall be raised. See SA9.3 to SA9.5.

ORIGINAL PLAN	SURVEY PLOTTED BY	DATE
	DRAWN BY	
NOTE BOOK	TRACED BY	
	DESIGNED BY	
No.	QUANTITIES BY	
	CHECKED BY	

ERIC Y. MATSUMOTO
LICENSED PROFESSIONAL ENGINEER
NO. 10156-S
HAWAII, U.S.A.

THIS WORK WAS PREPARED BY ME OR UNDER MY SUPERVISION.

SIGNATURE — EXPIRATION DATE OF THE LICENSE 4-30-24

STATE OF HAWAII
DEPARTMENT OF TRANSPORTATION
HIGHWAYS DIVISION

PEARL CITY VIADUCT IB

REPAIR PLAN SPAN NO. 15 TO SPAN NO. 17

INTERSTATE ROUTE H-1 IMPROVEMENTS
Vicinity of Pearl City Viaduct to Waimalu Viaduct
Federal-Aid Project No. NH-H1-1(285)

Scale: As Noted — Date: May 2023

SHEET No. SA2.7 OF 23 SHEETS

DRAWING NAME: Z:\00 ORIGINAL\22-001.8 PEARL CITY VIADUCT REPAIRS\01 CAD\05-23-23 10\PCY\PCVR-SA0201 PCV IB DECK REPAIR LAYPLAN.DWG PLOT TIME: 05-23-23, 3:47 PM)

FED. ROAD DIST. NO.	STATE	FEDERAL AID PROJ. NO.	FISCAL YEAR	SHEET NO.	TOTAL SHEETS
HAWAII	HAW.	NH-H1-1(285)	2023	185	287

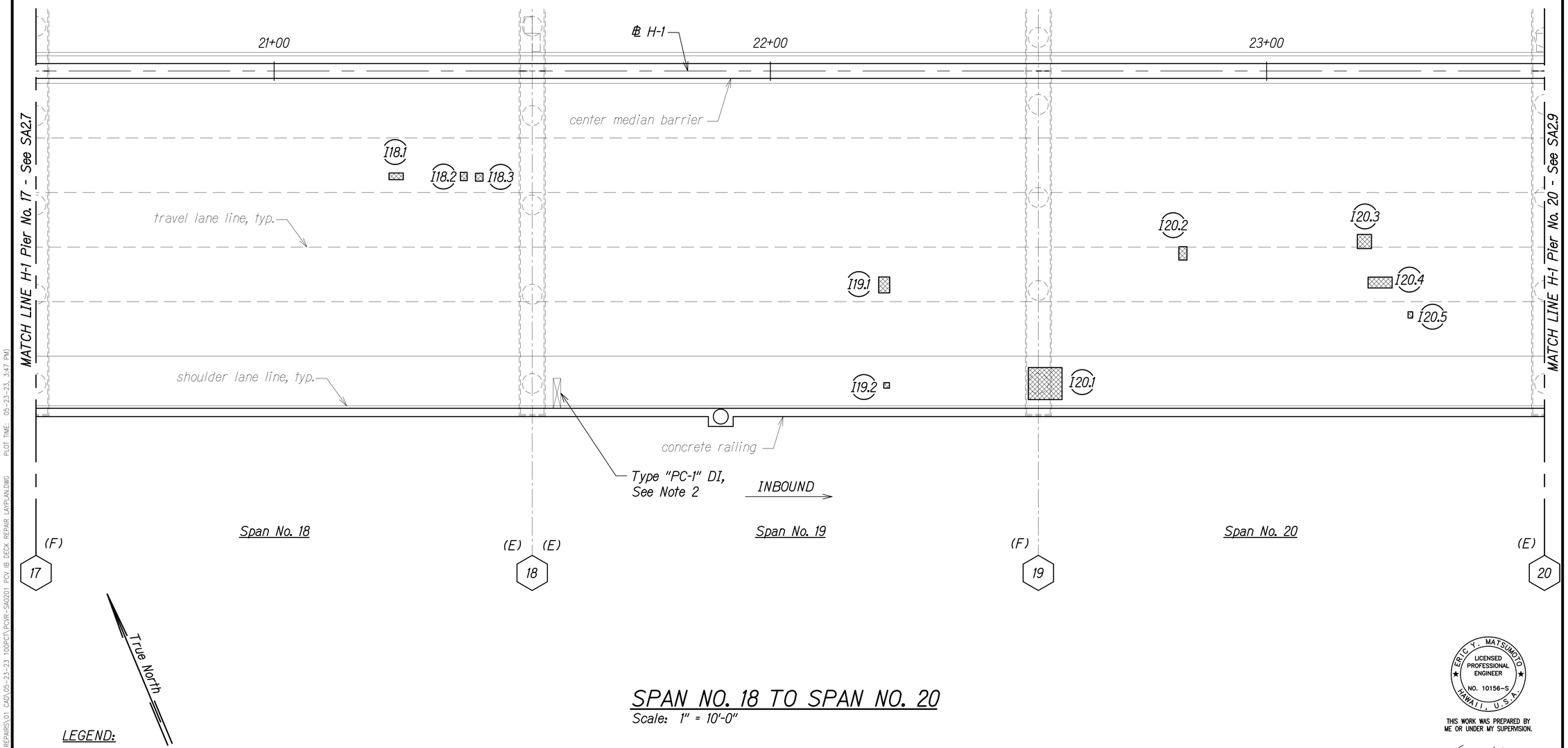

SPAN NO. 18 TO SPAN NO. 20

Scale: 1" = 10'-0"

LEGEND:

- # — Pier No.
- IX.# — Inbound Repair, See Schedules on SA3.1 to SA3.8
  - Defect No.
  - Span No.
  - Inbound
- Repair Area
- (E) Expansion Joint, See Note 1
- (F) Fixed Joint
- (H) Hinged Joint

NOTES:

1. All expansion joint compression seals shall be replaced. See SA10.1 to SA10.5.
2. Drain inlet grates shall be replaced and drain inlet frames shall be raised. See SA9.3 to SA9.5.

ERIC Y. MATSUMOTO
LICENSED PROFESSIONAL ENGINEER
NO. 10156-S
HAWAII, U.S.A.

THIS WORK WAS PREPARED BY ME OR UNDER MY SUPERVISION.

4-30-24
SIGNATURE EXPIRATION DATE OF THE LICENSE

STATE OF HAWAII
DEPARTMENT OF TRANSPORTATION
HIGHWAYS DIVISION

PEARL CITY VIADUCT IB
REPAIR PLAN SPAN NO. 18 TO SPAN NO. 20
INTERSTATE ROUTE H-1 IMPROVEMENTS
Vicinity of Pearl City Viaduct to Waimalu Viaduct
Federal-Aid Project No. NH-H1-1(285)

Scale: As Noted Date: May 2023

SHEET No. SA2.8 OF 23 SHEETS

ORIGINAL PLAN | SURVEY PLOTTED BY | DRAWN BY | TRACED BY | DESIGNED BY | QUANTITIES BY | CHECKED BY | DATE
NOTE BOOK No.

DRAWING NAME: Z:\OD ONGOING\22-001.8 PEARL CITY VIADUCT REPAIRS\01 CAD\05-23-23 IDOPCT\PCVR-SA0201 PCV IB DECK REPAIR LAYPLAN.DWG PLOT TIME: 05-23-23, 3:47 PM

FED. ROAD DIST. NO.	STATE	FEDERAL AID PROJ. NO.	FISCAL YEAR	SHEET NO.	TOTAL SHEETS
HAWAII	HAW.	NH-H1-1(285)	2023	186	287

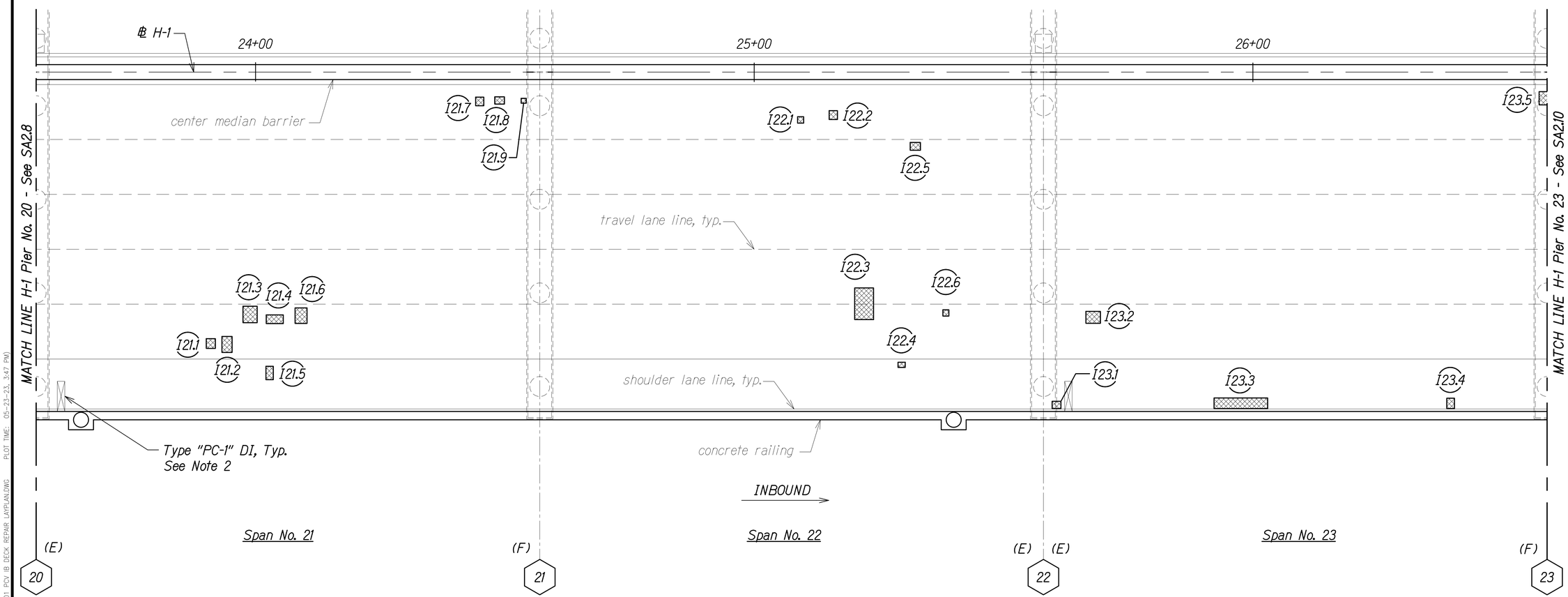

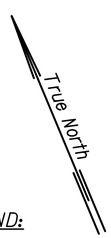

SPAN NO. 21 TO SPAN NO. 23

Scale: 1" = 10'-0"

LEGEND:

- # — Pier No.
- IX.# — Inbound Repair, See Schedules on SA3.1 to SA3.8
  - Defect No.
  - Span No.
  - Inbound
- Repair Area
- (E) Expansion Joint, See Note 1
- (F) Fixed Joint
- (H) Hinged Joint

NOTES:

1. All expansion joint compression seals shall be replaced. See SA10.1 to SA10.5.
2. Drain inlet grates shall be replaced and drain inlet frames shall be raised. See SA9.3 to SA9.5.

ERIC Y. MATSUMOTO
LICENSED PROFESSIONAL ENGINEER
NO. 10156-S
HAWAII, U.S.A.

THIS WORK WAS PREPARED BY ME OR UNDER MY SUPERVISION.

SIGNATURE — EXPIRATION DATE OF THE LICENSE 4-30-24

STATE OF HAWAII
DEPARTMENT OF TRANSPORTATION
HIGHWAYS DIVISION

PEARL CITY VIADUCT IB
REPAIR PLAN SPAN NO. 21 TO SPAN NO. 23
INTERSTATE ROUTE H-1 IMPROVEMENTS
Vicinity of Pearl City Viaduct to Waimalu Viaduct
Federal-Aid Project No. NH-H1-1(285)

Scale: As Noted — Date: May 2023

SHEET No. SA2.9 OF 23 SHEETS

ORIGINAL PLAN — SURVEY PLOTTED BY / DRAWN BY / NOTE BOOK — TRACED BY / DESIGNED BY / No. — QUANTITIES BY / CHECKED BY / DATE

DRAWING NAME: Z:\00 ORIGINCV\22-0018 PEARL CITY VIADUCT REPAIRS\01 CAD\05-23-23 10\PCV\PCVR-SA0201 PCV IB DECK REPAIR LAYPLAN.DWG PLOT TIME: 05-23-23, 3:47 PM

FED. ROAD DIST. NO.	STATE	FEDERAL AID PROJ. NO.	FISCAL YEAR	SHEET NO.	TOTAL SHEETS
HAWAII	HAW.	NH-H1-1(285)	2023	187	287

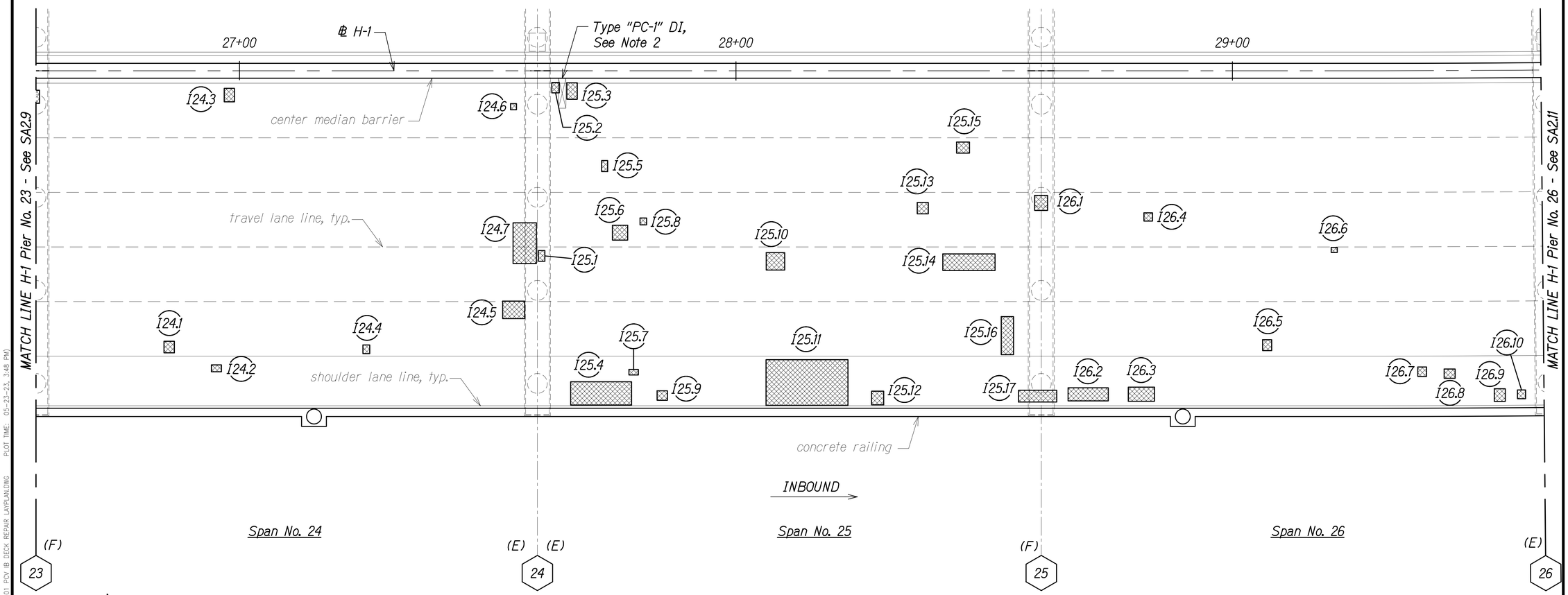

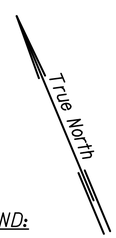

SPAN NO. 24 TO SPAN NO. 26

Scale: 1" = 10'-0"

LEGEND:

- # — Pier No.
- IX.# — Inbound Repair, See Schedules on SA3.1 to SA3.8
  - Defect No.
  - Span No.
  - Inbound
- Repair Area
- (E) Expansion Joint, See Note 1
- (F) Fixed Joint
- (H) Hinged Joint

NOTES:

1. All expansion joint compression seals shall be replaced. See SA10.1 to SA10.5.
2. Drain inlet grates shall be replaced and drain inlet frames shall be raised. See SA9.3 to SA9.5.

ERIC Y. MATSUMOTO
LICENSED PROFESSIONAL ENGINEER
NO. 10156-S
HAWAII, U.S.A.

THIS WORK WAS PREPARED BY ME OR UNDER MY SUPERVISION.

4-30-24

SIGNATURE — EXPIRATION DATE OF THE LICENSE

STATE OF HAWAII
DEPARTMENT OF TRANSPORTATION
HIGHWAYS DIVISION

PEARL CITY VIADUCT IB

REPAIR PLAN SPAN NO. 24 TO SPAN NO. 26

INTERSTATE ROUTE H-1 IMPROVEMENTS
Vicinity of Pearl City Viaduct to Waimalu Viaduct
Federal-Aid Project No. NH-H1-1(285)

Scale: As Noted — Date: May 2023

SHEET No. SA2.10 OF 23 SHEETS

ORIGINAL PLAN — SURVEY PLOTTED BY — DRAWN BY — TRACED BY — DESIGNED BY — QUANTITIES BY — CHECKED BY — DATE
NOTE BOOK No.

DRAWING NAME: Z:\00 ONGOING\22-001.8 PEARL CITY VIADUCT REPAIRS\01 CAD\05-23-23 100PCT\PCVR-SA0201 PCV IB DECK REPAIR LAYPLAN.DWG PLOT TIME: 05-23-23, 3:48 PM

FED. ROAD DIST. NO.	STATE	FEDERAL AID PROJ. NO.	FISCAL YEAR	SHEET NO.	TOTAL SHEETS
HAWAII	HAW.	NH-H1-1(285)	2023	188	287

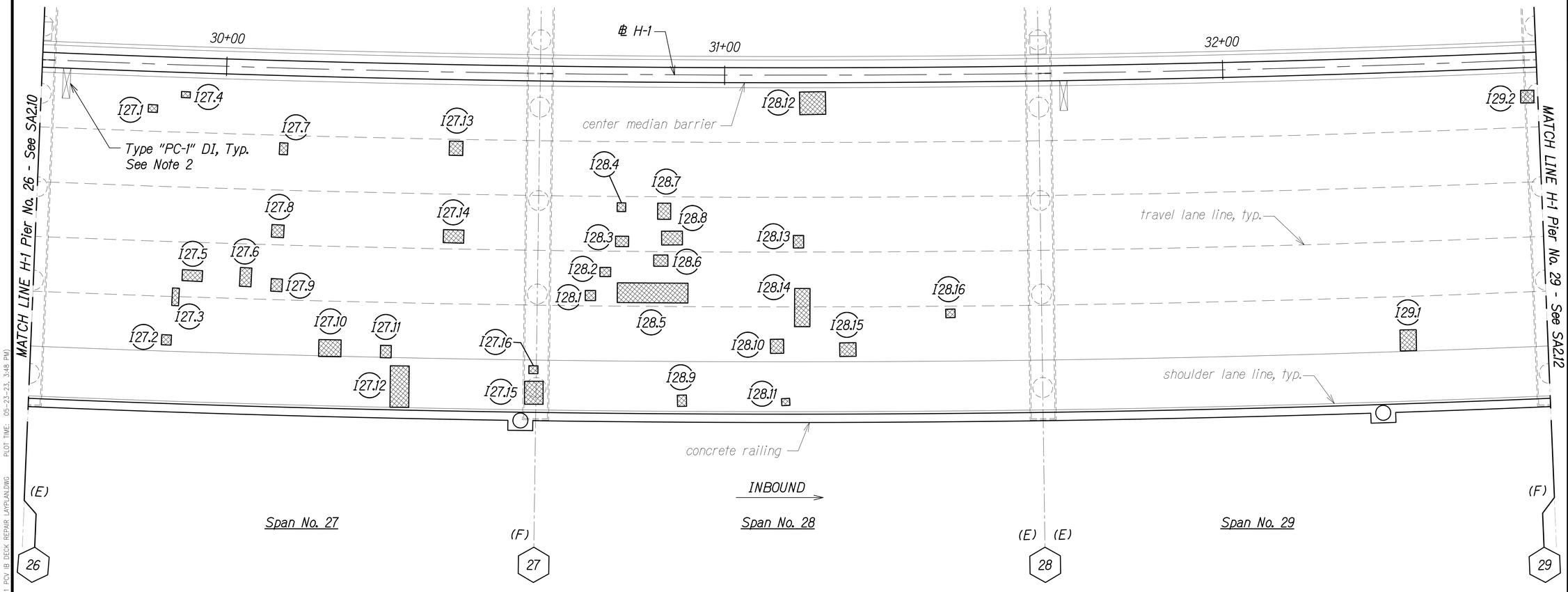

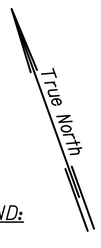

SPAN NO. 27 TO SPAN NO. 29

Scale: 1" = 10'-0"

LEGEND:

- # — Pier No.
- IX.# — Inbound Repair, See Schedules on SA3.1 to SA3.8
  - Defect No.
  - Span No.
  - Inbound
- Repair Area
- (E) Expansion Joint, See Note 1
- (F) Fixed Joint
- (H) Hinged Joint

NOTES:

1. All expansion joint compression seals shall be replaced. See SA10.1 to SA10.5.
2. Drain inlet grates shall be replaced and drain inlet frames shall be raised. See SA9.3 to SA9.5.

ORIGINAL PLAN	SURVEY PLOTTED BY	DATE
	DRAWN BY	
NOTE BOOK	TRACED BY	
	DESIGNED BY	
No.	QUANTITIES BY	
	CHECKED BY	

ERIC Y. MATSUMOTO
LICENSED PROFESSIONAL ENGINEER
NO. 10156-S
HAWAII, U.S.A.

THIS WORK WAS PREPARED BY ME OR UNDER MY SUPERVISION.

SIGNATURE — EXPIRATION DATE OF THE LICENSE 4-30-24

STATE OF HAWAII
DEPARTMENT OF TRANSPORTATION
HIGHWAYS DIVISION

PEARL CITY VIADUCT IB

REPAIR PLAN SPAN NO. 27 TO SPAN NO. 29

INTERSTATE ROUTE H-1 IMPROVEMENTS
Vicinity of Pearl City Viaduct to Waimalu Viaduct
Federal-Aid Project No. NH-H1-1(285)

Scale: As Noted — Date: May 2023

SHEET No. SA2.11 OF 23 SHEETS

DRAWING NAME: Z:\00 ONGOING\22-0018 PEARL CITY VIADUCT REPAIRS\01 CAD\GS-23-23 100PCT\PCVR-SA0201 PCV IB DECK REPAIR LAYPLAN.DWG PLOT TIME: 05-23-23, 3:48 PM

FED. ROAD DIST. NO.	STATE	FEDERAL AID PROJ. NO.	FISCAL YEAR	SHEET NO.	TOTAL SHEETS
HAWAII	HAW.	NH-H1-1(285)	2023	189	287

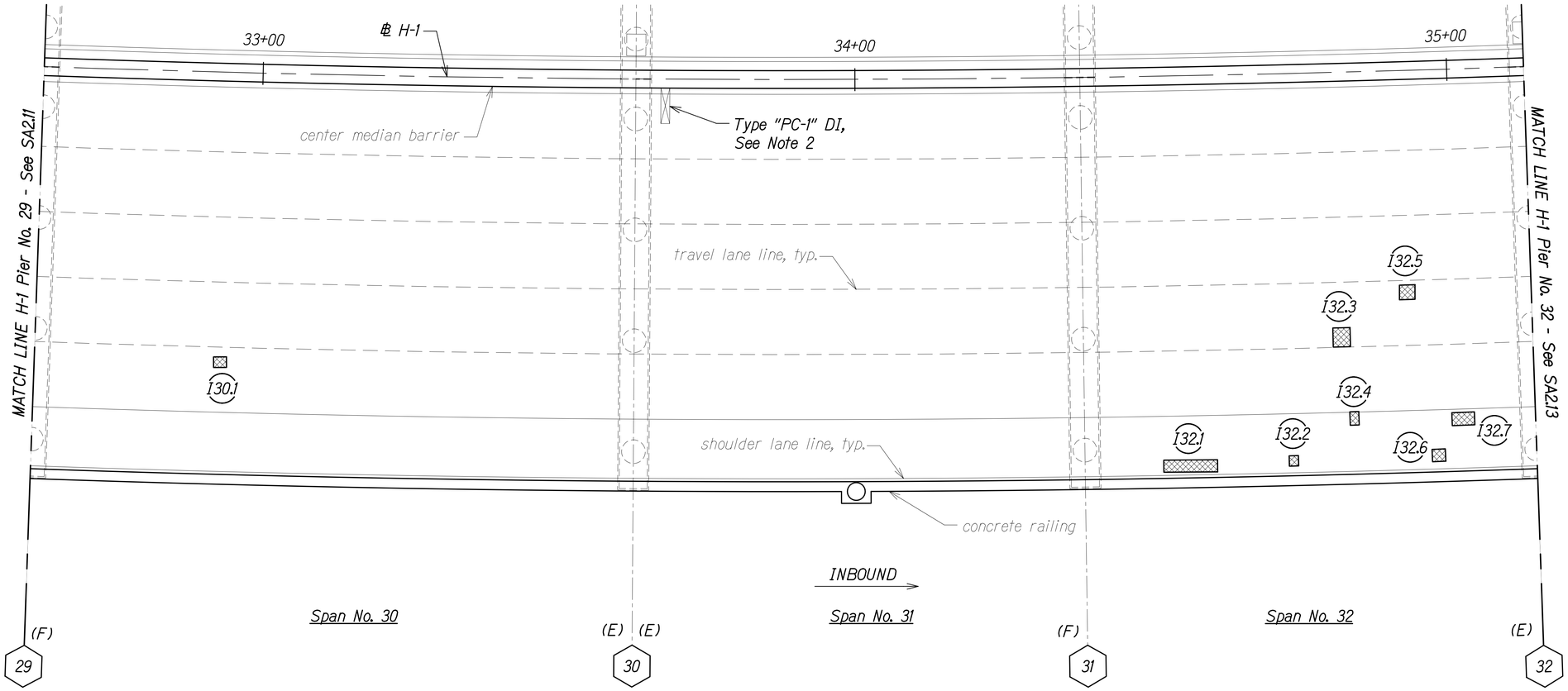

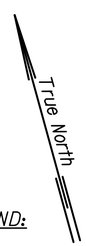

SPAN NO. 30 TO SPAN NO. 32

Scale: 1" = 10'-0"

LEGEND:

- # — Pier No.
- IX.# — Inbound Repair, See Schedules on SA3.1 to SA3.8
  - Defect No.
  - Span No.
  - Inbound
- Repair Area
- (E) Expansion Joint. See Note 1
- (F) Fixed Joint
- (H) Hinged Joint

NOTES:

1. All expansion joint compression seals shall be replaced. See SA10.1 to SA10.5.
2. Drain inlet grates shall be replaced and drain inlet frames shall be raised. See SA9.3 to SA9.5.

ORIGINAL PLAN	SURVEY PLOTTED BY	DATE
	DRAWN BY	
NOTE BOOK	TRACED BY	
	DESIGNED BY	
No.	QUANTITIES BY	
	CHECKED BY	

ERIC Y. MATSUMOTO
LICENSED PROFESSIONAL ENGINEER
NO. 10156-S
HAWAII, U.S.A.

THIS WORK WAS PREPARED BY ME OR UNDER MY SUPERVISION.

SIGNATURE — EXPIRATION DATE OF THE LICENSE 4-30-24

STATE OF HAWAII
DEPARTMENT OF TRANSPORTATION
HIGHWAYS DIVISION

PEARL CITY VIADUCT IB
REPAIR PLAN SPAN NO. 30 TO SPAN NO. 32
INTERSTATE ROUTE H-1 IMPROVEMENTS
Vicinity of Pearl City Viaduct to Waimalu Viaduct
Federal-Aid Project No. NH-H1-1(285)

Scale: As Noted — Date: May 2023

SHEET No. SA2.12 OF 23 SHEETS

DRAWING NAME: Z:\OD ORIGINAL\22-001 8 PEARL CITY VIADUCT REPAIRS\01 CAD\05-23-23 10GPC\PCVR-SA0201 PCV IB DECK REPAIR LAYPLAN.DWG PLOT TIME: 05-23-23, 3:48 PM

FED. ROAD DIST. NO.	STATE	FEDERAL AID PROJ. NO.	FISCAL YEAR	SHEET NO.	TOTAL SHEETS
HAWAII	HAW.	NH-H1-1(285)	2023	190	287

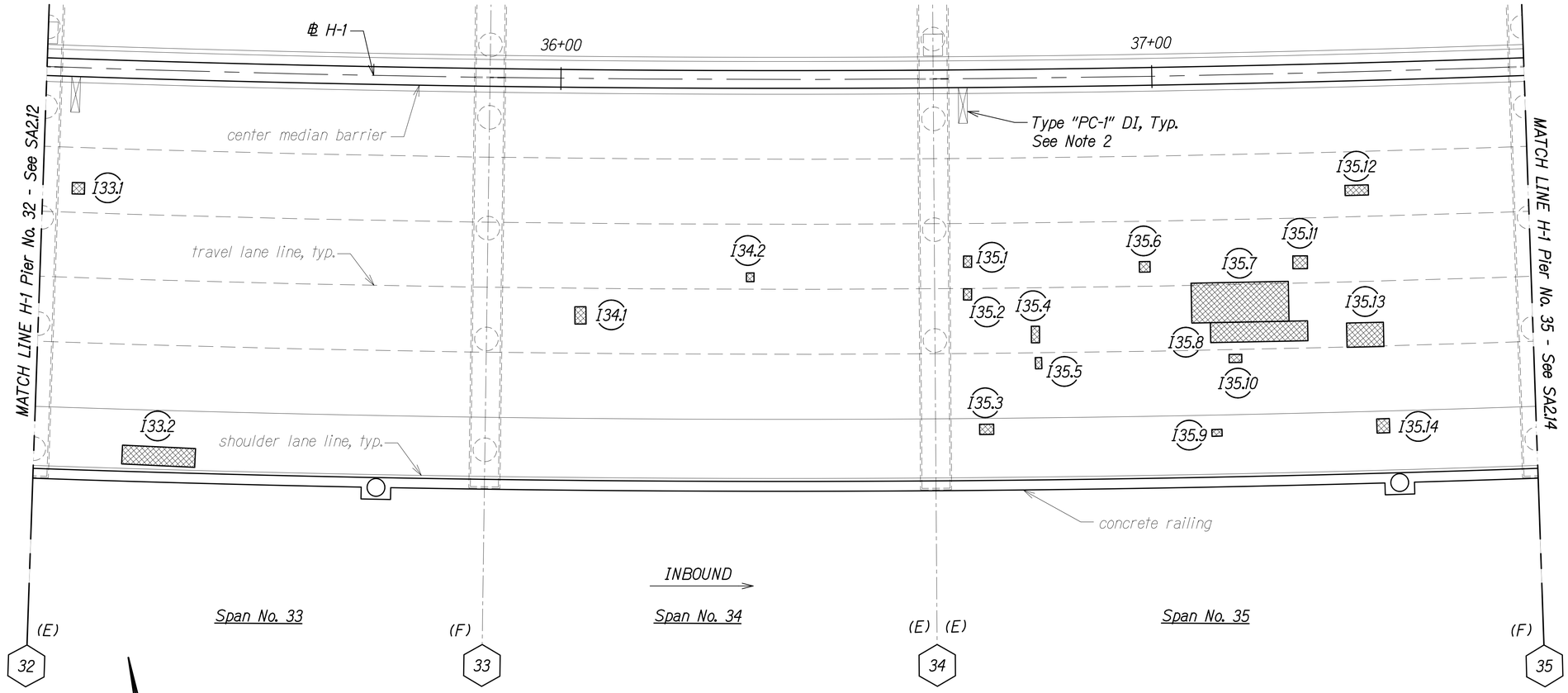

SPAN NO. 33 TO SPAN NO. 35

Scale: 1" = 10'-0"

LEGEND:

- # — Pier No.
- IX.# — Inbound Repair, See Schedules on SA3.1 to SA3.8
  - Defect No.
  - Span No.
  - Inbound
- Repair Area
- (E) Expansion Joint, See Note 1
- (F) Fixed Joint
- (H) Hinged Joint

NOTES:

1. All expansion joint compression seals shall be replaced. See SA10.1 to SA10.5.
2. Drain inlet grates shall be replaced and drain inlet frames shall be raised. See SA9.3 to SA9.5.

ORIGINAL PLAN	SURVEY PLOTTED BY	DATE
	DRAWN BY	
NOTE BOOK	TRACED BY	
	DESIGNED BY	
No.	QUANTITIES BY	
	CHECKED BY	

DRAWING NAME: Z:\OD ORIGINAL\22-001 8 PEARL CITY VIADUCT REPAIRS\01 CAD\05-23-23 1GRPC1\PCVR-SA0201 PCV IB DECK REPAIR LAYPLAN.DWG PLOT TIME: 05-23-23, 3:48 PM)

ERIC Y. MATSUMOTO
LICENSED PROFESSIONAL ENGINEER
NO. 10156-S
HAWAII, U.S.A.

THIS WORK WAS PREPARED BY ME OR UNDER MY SUPERVISION.

SIGNATURE — EXPIRATION DATE OF THE LICENSE 4-30-24

STATE OF HAWAII
DEPARTMENT OF TRANSPORTATION
HIGHWAYS DIVISION

PEARL CITY VIADUCT IB
REPAIR PLAN SPAN NO. 33 TO SPAN NO. 35

INTERSTATE ROUTE H-1 IMPROVEMENTS
Vicinity of Pearl City Viaduct to Waimalu Viaduct
Federal-Aid Project No. NH-H1-1(285)

Scale: As Noted — Date: May 2023

SHEET No. SA2.13 OF 23 SHEETS

FED. ROAD DIST. NO.	STATE	FEDERAL AID PROJ. NO.	FISCAL YEAR	SHEET NO.	TOTAL SHEETS
HAWAII	HAW.	NH-H1-1(285)	2023	191	287

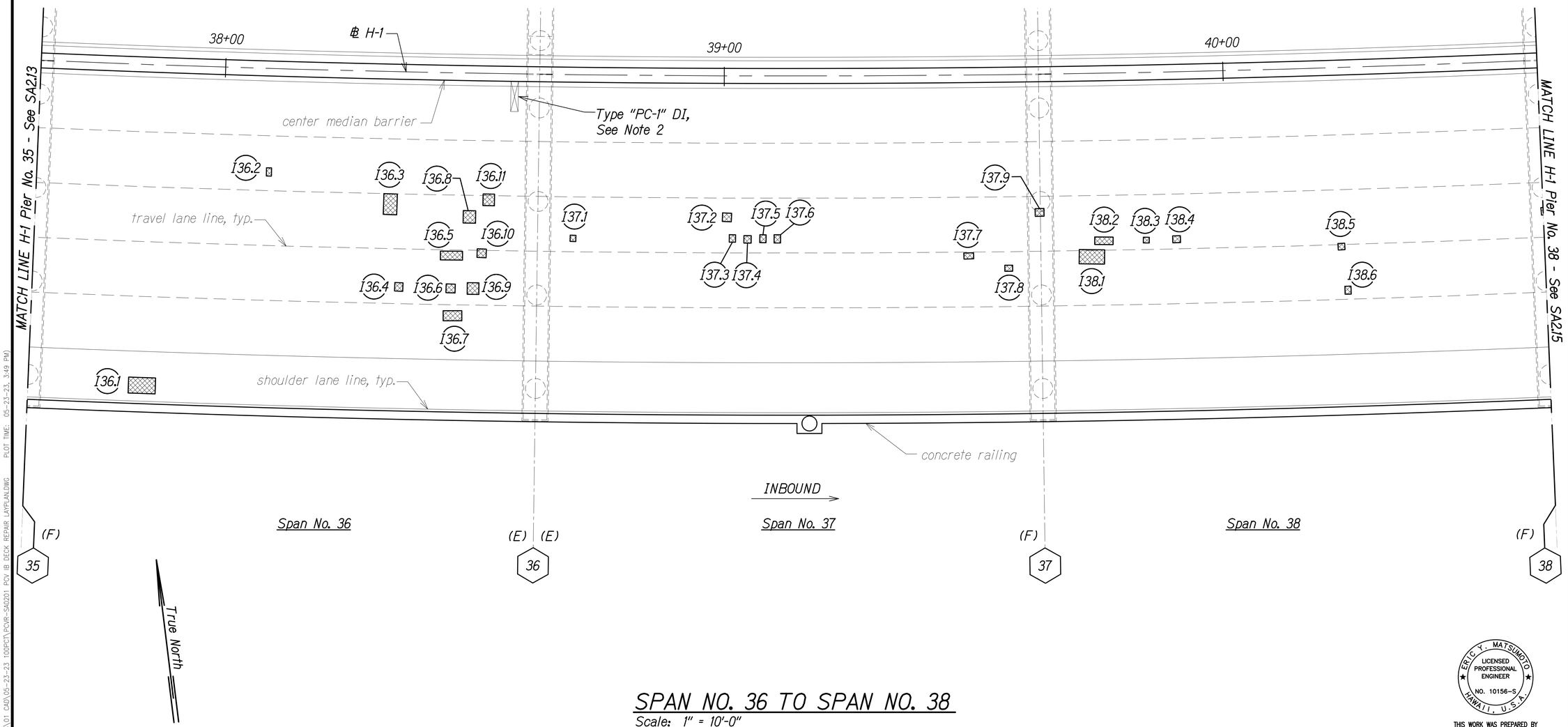

SPAN NO. 36 TO SPAN NO. 38

Scale: 1" = 10'-0"

LEGEND:

- # — Pier No.
- IX.# — Inbound Repair, See Schedules on SA3.1 to SA3.8
  - Defect No.
  - Span No.
  - Inbound
- Repair Area
- (E) Expansion Joint, See Note 1
- (F) Fixed Joint
- (H) Hinged Joint

NOTES:

1. All expansion joint compression seals shall be replaced. See SA10.1 to SA10.5.
2. Drain inlet grates shall be replaced and drain inlet frames shall be raised. See SA9.3 to SA9.5.

ERIC Y. MATSUMOTO
LICENSED PROFESSIONAL ENGINEER
NO. 10156-S
HAWAII, U.S.A.

THIS WORK WAS PREPARED BY ME OR UNDER MY SUPERVISION.

SIGNATURE — EXPIRATION DATE OF THE LICENSE 4-30-24

STATE OF HAWAII
DEPARTMENT OF TRANSPORTATION
HIGHWAYS DIVISION

PEARL CITY VIADUCT IB
REPAIR PLAN SPAN NO. 36 TO SPAN NO. 38

INTERSTATE ROUTE H-1 IMPROVEMENTS
Vicinity of Pearl City Viaduct to Waimalu Viaduct
Federal-Aid Project No. NH-H1-1(285)

Scale: As Noted — Date: May 2023

SHEET No. SA2.14 OF 23 SHEETS

ORIGINAL PLAN — SURVEY PLOTTED BY — DRAWN BY — TRACED BY — DESIGNED BY — QUANTITIES BY — CHECKED BY — DATE
NOTE BOOK No.

DRAWING NAME: Z:\00 ONGOING\22-0013 PEARL CITY VIADUCT REPAIRS\01 CAD\05-23-23 100PCT\POWR-SA0201 PCV IB DECK REPAIR LAYPLAN.DWG PLOT TIME: 05-23-23, 3:49 PM

FED. ROAD DIST. NO.	STATE	FEDERAL AID PROJ. NO.	FISCAL YEAR	SHEET NO.	TOTAL SHEETS
HAWAII	HAW.	NH-H1-1(285)	2023	192	287

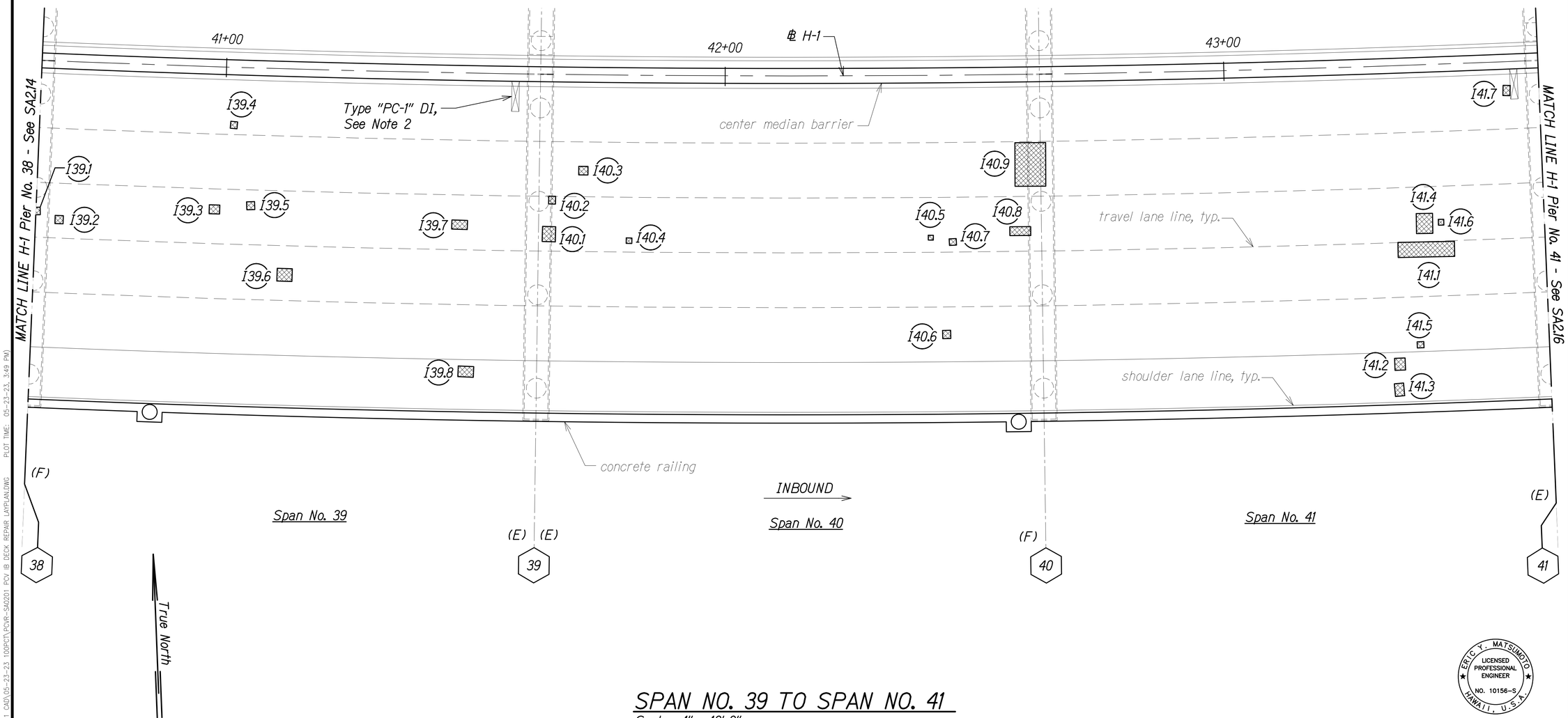

SPAN NO. 39 TO SPAN NO. 41

Scale: 1" = 10'-0"

LEGEND:

- # — Pier No.
- IX.# — Inbound Repair, See Schedules on SA3.1 to SA3.8
  - Defect No.
  - Span No.
  - Inbound
- Repair Area
- (E) Expansion Joint, See Note 1
- (F) Fixed Joint
- (H) Hinged Joint

NOTES:

1. All expansion joint compression seals shall be replaced. See SA10.1 to SA10.5.
2. Drain inlet grates shall be replaced and drain inlet frames shall be raised. See SA9.3 to SA9.5.

ERIC Y. MATSUMOTO
LICENSED PROFESSIONAL ENGINEER
NO. 10156-S
HAWAII, U.S.A.

THIS WORK WAS PREPARED BY ME OR UNDER MY SUPERVISION.

SIGNATURE — EXPIRATION DATE OF THE LICENSE 4-30-24

STATE OF HAWAII
DEPARTMENT OF TRANSPORTATION
HIGHWAYS DIVISION

PEARL CITY VIADUCT IB
REPAIR PLAN SPAN NO. 39 TO SPAN NO. 41

INTERSTATE ROUTE H-1 IMPROVEMENTS
Vicinity of Pearl City Viaduct to Waimalu Viaduct
Federal-Aid Project No. NH-H1-1(285)

Scale: As Noted — Date: May 2023

SHEET No. SA2.15 OF 23 SHEETS

ORIGINAL PLAN — NOTE BOOK No. — SURVEY PLOTTED BY — DRAWN BY — TRACED BY — DESIGNED BY — QUANTITIES BY — CHECKED BY — DATE

DRAWING NAME: Z:\OD ONGOING\22-0013 PEARL CITY VIADUCT REPAIRS\01 CAD\05-23-23 100PCT\POWR-SA0201 POV IB DECK REPAIR LAYPLAN.DWG PLOT TIME: 05-23-23, 3:49 PM

FED. ROAD DIST. NO.	STATE	FEDERAL AID PROJ. NO.	FISCAL YEAR	SHEET NO.	TOTAL SHEETS
HAWAII	HAW.	NH-H1-1(285)	2023	193	287

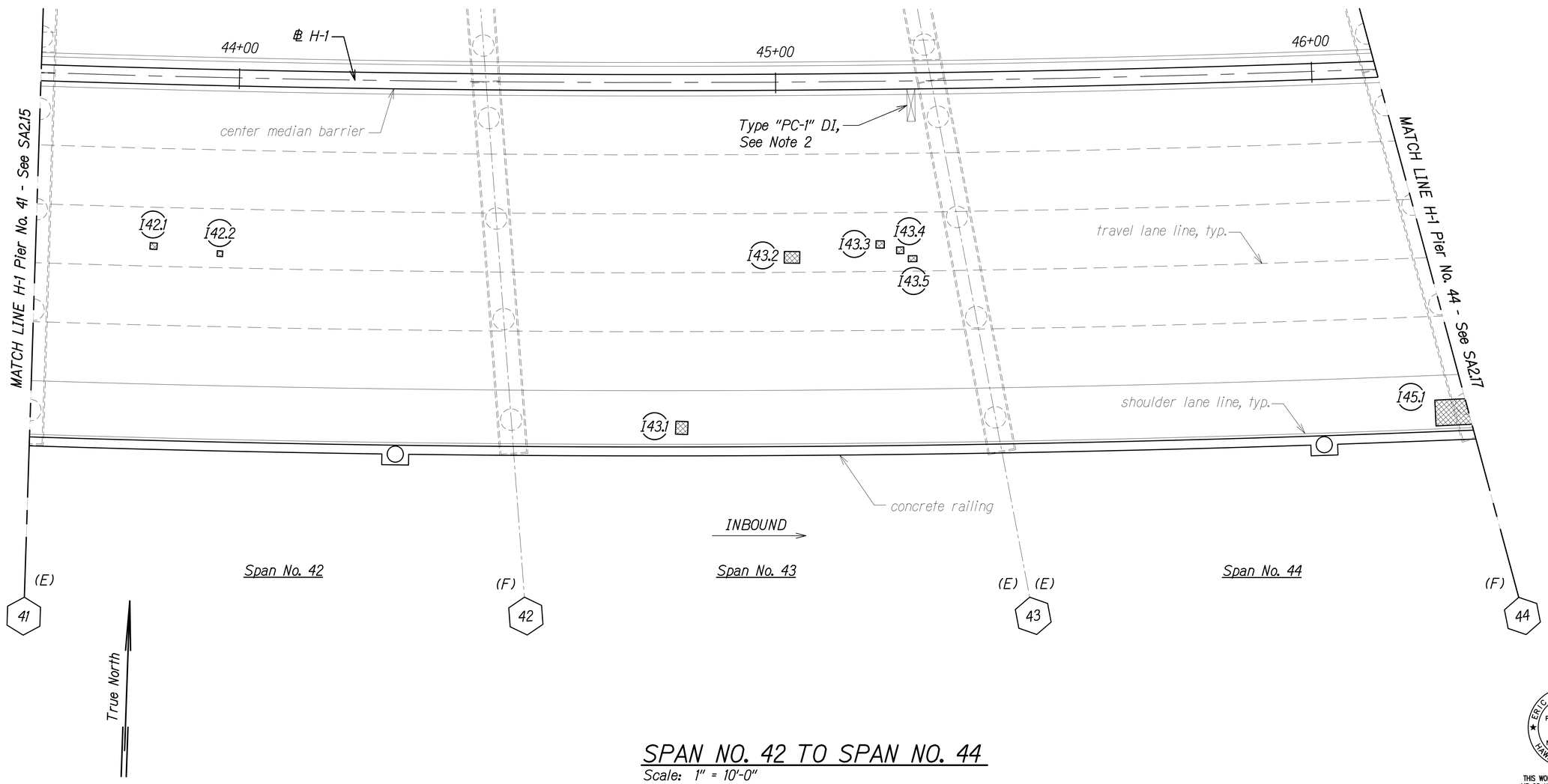

SPAN NO. 42 TO SPAN NO. 44

Scale: 1" = 10'-0"

LEGEND:

- # — Pier No.
- IX.# — Inbound Repair, See Schedules on SA3.1 to SA3.8
  - Defect No.
  - Span No.
  - Inbound
- Repair Area
- (E) Expansion Joint, See Note 1
- (F) Fixed Joint
- (H) Hinged Joint

NOTES:

1. All expansion joint compression seals shall be replaced. See SA10.1 to SA10.5.
2. Drain inlet grates shall be replaced and drain inlet frames shall be raised. See SA9.3 to SA9.5.

ORIGINAL PLAN	SURVEY PLOTTED BY	DATE
	DRAWN BY	
NOTE BOOK	TRACED BY	
	DESIGNED BY	
No.	QUANTITIES BY	
	CHECKED BY	

ERIC Y. MATSUMOTO
LICENSED PROFESSIONAL ENGINEER
NO. 10156-S
HAWAII, U.S.A.

THIS WORK WAS PREPARED BY ME OR UNDER MY SUPERVISION.

SIGNATURE — EXPIRATION DATE OF THE LICENSE 4-30-24

STATE OF HAWAII
DEPARTMENT OF TRANSPORTATION
HIGHWAYS DIVISION

PEARL CITY VIADUCT IB
REPAIR PLAN SPAN NO. 42 TO SPAN NO. 44
INTERSTATE ROUTE H-1 IMPROVEMENTS
Vicinity of Pearl City Viaduct to Waimalu Viaduct
Federal-Aid Project No. NH-H1-1(285)

Scale: As Noted — Date: May 2023

SHEET No. SA2.16 OF 23 SHEETS

DRAWING NAME: Z:\DI ONGOING\22-003.B PEARL CITY VIADUCT REPAIRS\01 CAD\05-23-23 1000PCT\PCYR-SA0201 POV 4B DECK REPAIR LAYPLAN.DWG PLOT TIME: 05-23-23, 3:49 PM

FED. ROAD DIST. NO.	STATE	FEDERAL AID PROJ. NO.	FISCAL YEAR	SHEET NO.	TOTAL SHEETS
HAWAII	HAW.	NH-H1-1(285)	2023	194	287

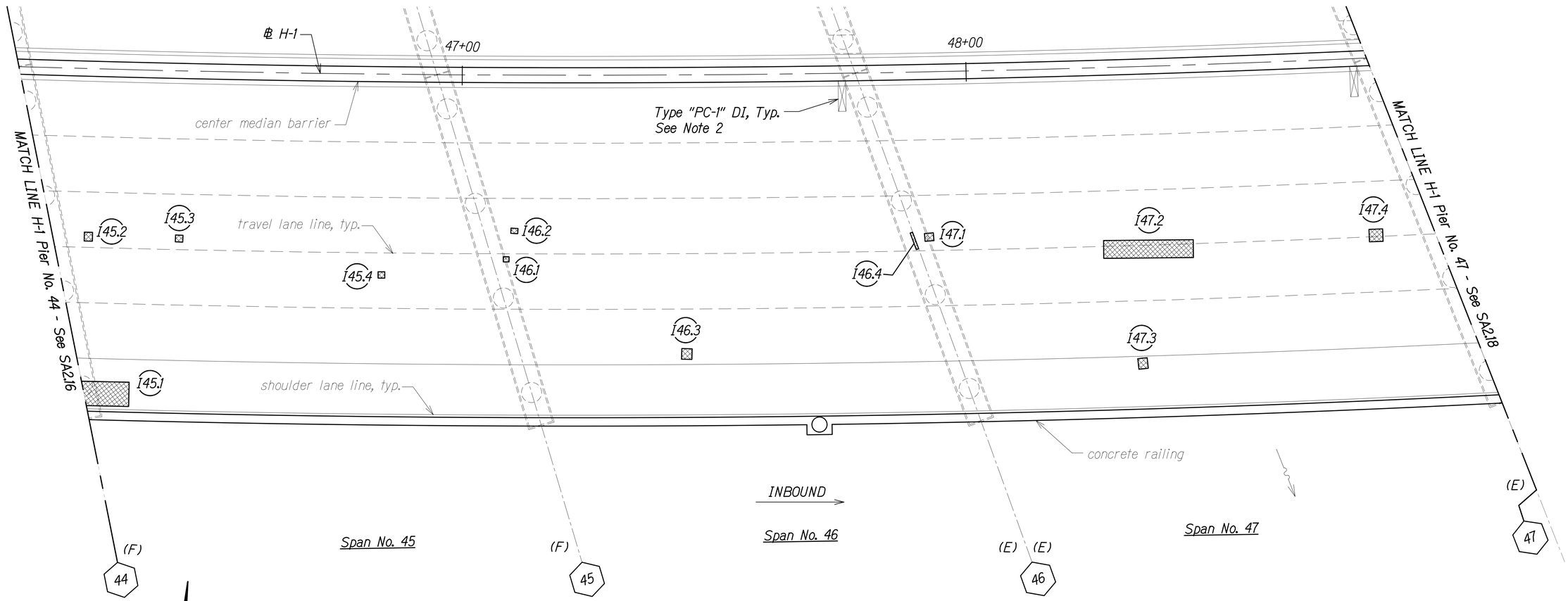

SPAN NO. 45 TO SPAN NO. 47

Scale: 1" = 10'-0"

LEGEND:

- # — Pier No.
- IX.# — Inbound Repair, See Schedules on SA3.1 to SA3.8
  - Defect No.
  - Span No.
  - Inbound
- Repair Area
- (E) Expansion Joint, See Note 1
- (F) Fixed Joint
- (H) Hinged Joint

NOTES:

1. All expansion joint compression seals shall be replaced. See SA10.1 to SA10.5.
2. Drain inlet grates shall be replaced and drain inlet frames shall be raised. See SA9.3 to SA9.5.

ERIC Y. MATSUMOTO
LICENSED PROFESSIONAL ENGINEER
NO. 10156-S
HAWAII, U.S.A.

THIS WORK WAS PREPARED BY ME OR UNDER MY SUPERVISION.

SIGNATURE — EXPIRATION DATE OF THE LICENSE 4-30-24

STATE OF HAWAII
DEPARTMENT OF TRANSPORTATION
HIGHWAYS DIVISION

PEARL CITY VIADUCT IB
REPAIR PLAN SPAN NO. 45 TO SPAN NO. 47

INTERSTATE ROUTE H-1 IMPROVEMENTS
Vicinity of Pearl City Viaduct to Waimalu Viaduct
Federal-Aid Project No. NH-H1-1(285)

Scale: As Noted — Date: May 2023

SHEET No. SA2.17 OF 23 SHEETS

194

ORIGINAL PLAN — SURVEY PLOTTED BY — DRAWN BY — NOTE BOOK No. — TRACED BY — DESIGNED BY — QUANTITIES BY — CHECKED BY — DATE

DRAWING NAME: Z:\OD ENGINEING\22-001.8 PEARL CITY VIADUCT REPAIRS\01 CAD\05-23-23 1GDPC1\PCVR-SA0201 PCV IB DECK REPAIR LAYPLAN.DWG PLOT TIME: 05-23-23, 3:49 PM

FED. ROAD DIST. NO.	STATE	FEDERAL AID PROJ. NO.	FISCAL YEAR	SHEET NO.	TOTAL SHEETS
HAWAII	HAW.	NH-H1-1(285)	2023	195	287

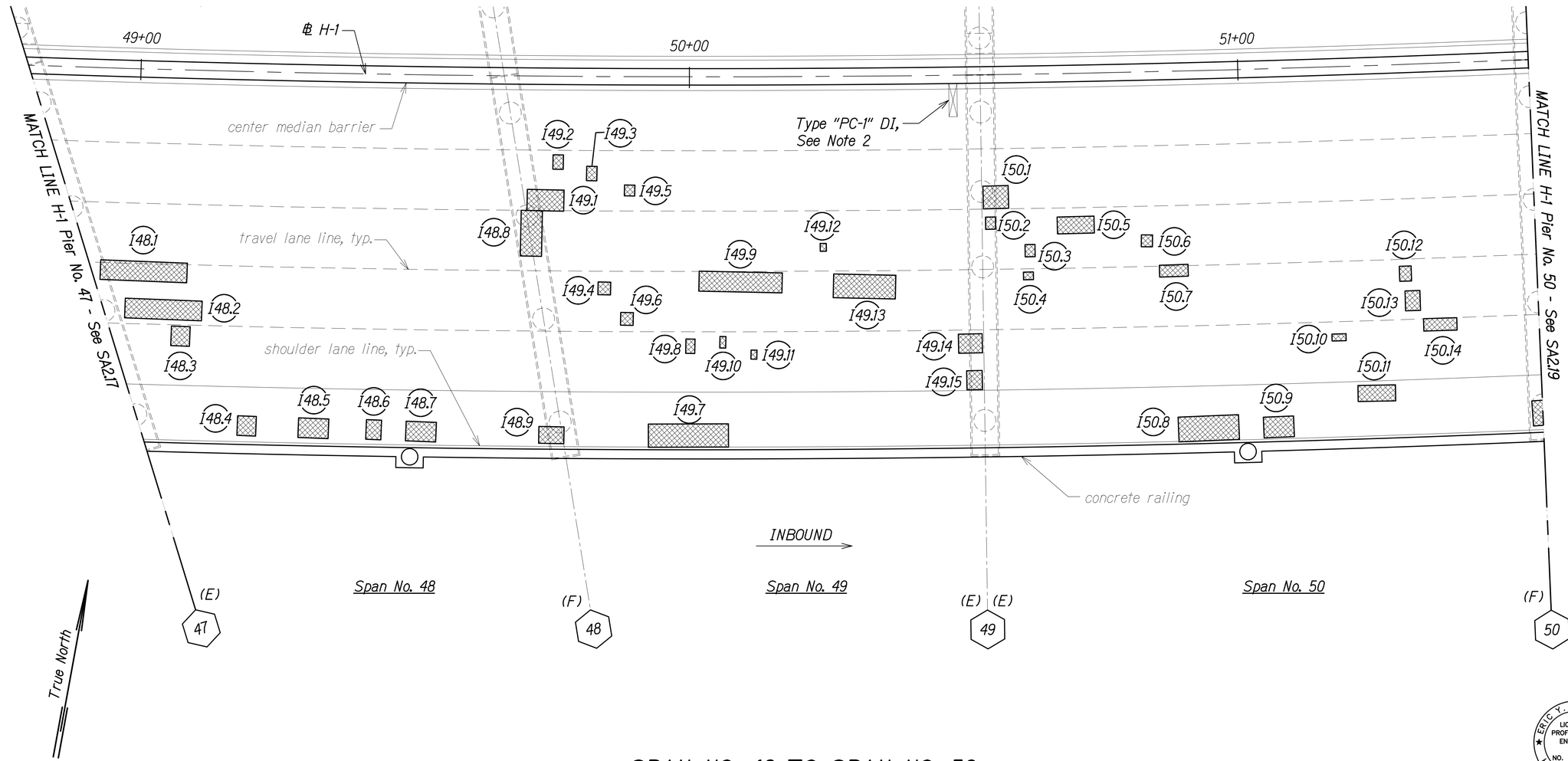

SPAN NO. 48 TO SPAN NO. 50

Scale: 1" = 10'-0"

LEGEND:

- # — Pier No.
- Repair Area
- (E) Expansion Joint, See Note 1
- (F) Fixed Joint
- (H) Hinged Joint
- I.X.# — Inbound Repair, See Schedules on SA3.1 to SA3.8
  - Defect No.
  - Span No.
  - Inbound

NOTES:

1. All expansion joint compression seals shall be replaced. See SA10.1 to SA10.5.
2. Drain inlet grates shall be replaced and drain inlet frames shall be raised. See SA9.3 to SA9.5.

ERIC Y. MATSUMOTO
LICENSED PROFESSIONAL ENGINEER
NO. 10156-S
HAWAII, U.S.A.

THIS WORK WAS PREPARED BY ME OR UNDER MY SUPERVISION.

SIGNATURE — EXPIRATION DATE OF THE LICENSE 4-30-24

STATE OF HAWAII
DEPARTMENT OF TRANSPORTATION
HIGHWAYS DIVISION

PEARL CITY VIADUCT IB

REPAIR PLAN SPAN NO. 48 TO SPAN NO. 50

INTERSTATE ROUTE H-1 IMPROVEMENTS
Vicinity of Pearl City Viaduct to Waimalu Viaduct
Federal-Aid Project No. NH-H1-1(285)

Scale: As Noted — Date: May 2023

SHEET No. SA2.18 OF 23 SHEETS

ORIGINAL PLAN | SURVEY PLOTTED BY | DRAWN BY | TRACED BY | DESIGNED BY | QUANTITIES BY | CHECKED BY | DATE | NOTE BOOK No.

DRAWING NAME: Z:\OD ONGOING\22-631.8 PEARL CITY VIADUCT REPAIRS\01 CAD\05-23-23 100PCT\PCVR-SA0201 POV IB DECK REPAIR LAYPLAN.DWG PLOT TIME: 05-23-23, 3:50 PM)

FED. ROAD DIST. NO.	STATE	FEDERAL AID PROJ. NO.	FISCAL YEAR	SHEET NO.	TOTAL SHEETS
HAWAII	HAW.	NH-H1-1(285)	2023	196	287

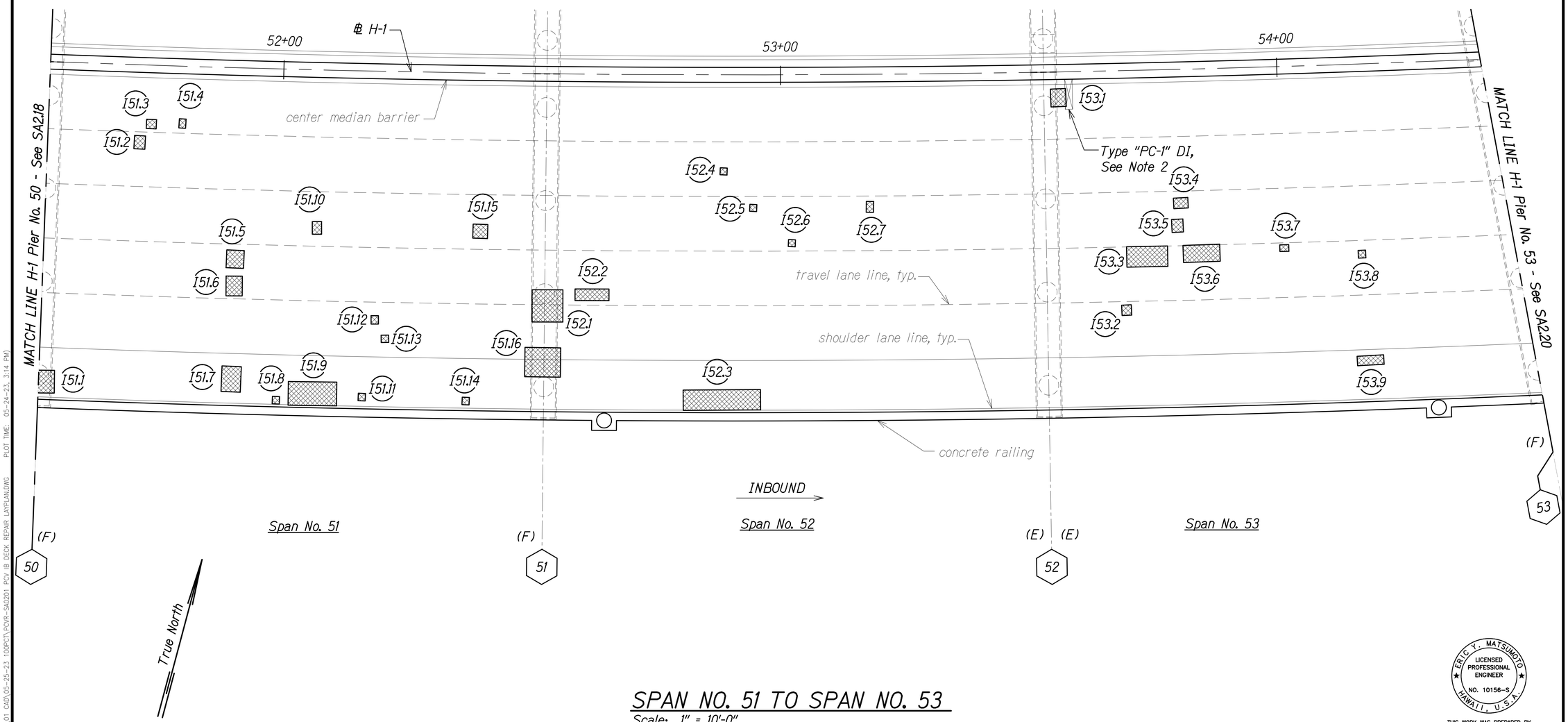

SPAN NO. 51 TO SPAN NO. 53

Scale: 1" = 10'-0"

LEGEND:

- # — Pier No.
- IX.# — Inbound Repair, See Schedules on SA3.1 to SA3.8
  - Defect No.
  - Span No.
  - Inbound
- Repair Area
- (E) Expansion Joint, See Note 1
- (F) Fixed Joint
- (H) Hinged Joint

NOTES:

1. All expansion joint compression seals shall be replaced. See SA10.1 to SA10.5.
2. Drain inlet grates shall be replaced and drain inlet frames shall be raised. See SA9.3 to SA9.5.

ORIGINAL PLAN	SURVEY PLOTTED BY	DATE
NOTE BOOK	DRAWN BY	
	TRACED BY	
	DESIGNED BY	
	QUANTITIES BY	
No.	CHECKED BY	

DRAWING NAME: Z:\OD ONGOING\22-201.8 PEARL CITY VIADUCT REPAIRS\01 CAD\05-25-23 1GRPCT\POYR-SA0201 POV IB DECK REPAIR LAYPLAN.DWG PLOT TIME: 05-24-23, 3:14 PM)

ERIC Y. MATSUMOTO
LICENSED PROFESSIONAL ENGINEER
NO. 10156-S
HAWAII, U.S.A.

THIS WORK WAS PREPARED BY ME OR UNDER MY SUPERVISION.

SIGNATURE — EXPIRATION DATE OF THE LICENSE 4-30-24

STATE OF HAWAII
DEPARTMENT OF TRANSPORTATION
HIGHWAYS DIVISION

PEARL CITY VIADUCT IB
REPAIR PLAN SPAN NO. 51 TO SPAN NO. 53

INTERSTATE ROUTE H-1 IMPROVEMENTS
Vicinity of Pearl City Viaduct to Waimalu Viaduct
Federal-Aid Project No. NH-H1-1(285)

Scale: As Noted — Date: May 2023

SHEET No. SA2.19 OF 23 SHEETS

FED. ROAD DIST. NO.	STATE	FEDERAL AID PROJ. NO.	FISCAL YEAR	SHEET NO.	TOTAL SHEETS
HAWAII	HAW.	NH-H1-1(285)	2023	197	287

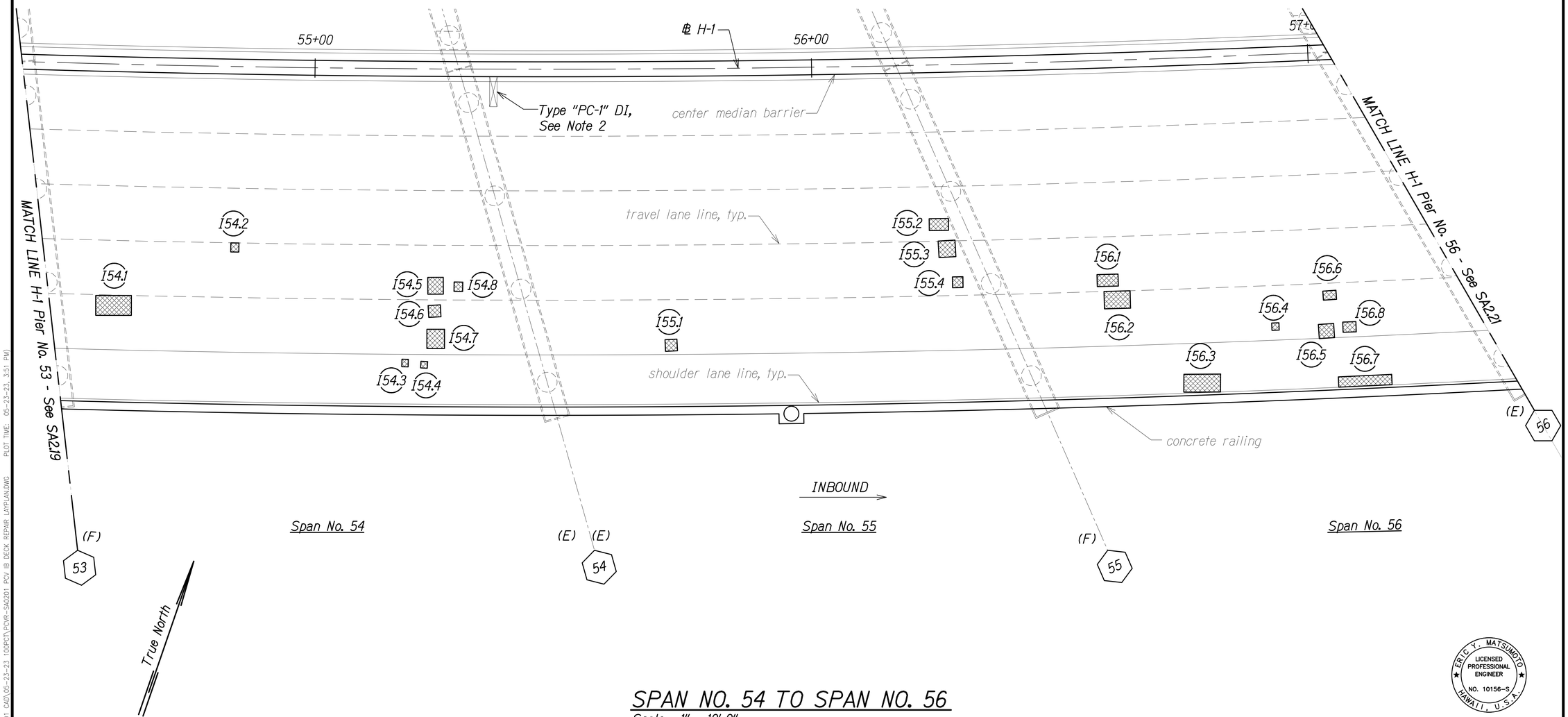

SPAN NO. 54 TO SPAN NO. 56

Scale: 1" = 10'-0"

LEGEND:

- # — Pier No.
- IX.# — Inbound Repair, See Schedules on SA3.1 to SA3.8
  - Defect No.
  - Span No.
  - Inbound
- Repair Area
- (E) Expansion Joint, See Note 1
- (F) Fixed Joint
- (H) Hinged Joint

NOTES:

1. All expansion joint compression seals shall be replaced. See SA10.1 to SA10.5.
2. Drain inlet grates shall be replaced and drain inlet frames shall be raised. See SA9.3 to SA9.5.

ORIGINAL PLAN	SURVEY PLOTTED BY	DATE
	DRAWN BY	
NOTE BOOK	TRACED BY	
	DESIGNED BY	
No.	QUANTITIES BY	
	CHECKED BY	

ERIC Y. MATSUMOTO
LICENSED PROFESSIONAL ENGINEER
NO. 10156-S
HAWAII, U.S.A.

THIS WORK WAS PREPARED BY ME OR UNDER MY SUPERVISION.

SIGNATURE — EXPIRATION DATE OF THE LICENSE 4-30-24

STATE OF HAWAII
DEPARTMENT OF TRANSPORTATION
HIGHWAYS DIVISION

PEARL CITY VIADUCT IB
REPAIR PLAN SPAN NO. 54 TO SPAN NO. 56

INTERSTATE ROUTE H-1 IMPROVEMENTS
Vicinity of Pearl City Viaduct to Waimalu Viaduct
Federal-Aid Project No. NH-H1-1(285)

Scale: As Noted — Date: May 2023

SHEET No. SA2.20 OF 23 SHEETS

DRAWING NAME: Z:\OD ONGOING\22-001.8 PEARL CITY VIADUCT REPAIRS\01 CAD\05-23-23 1\OPC\PCVR-SA0201 PCV IB DECK REPAIR LAYPLAN.DWG PLOT TIME: 05-23-23, 3:51 PM)

FED. ROAD DIST. NO.	STATE	FEDERAL AID PROJ. NO.	FISCAL YEAR	SHEET NO.	TOTAL SHEETS
HAWAII	HAW.	NH-H1-1(285)	2023	198	287

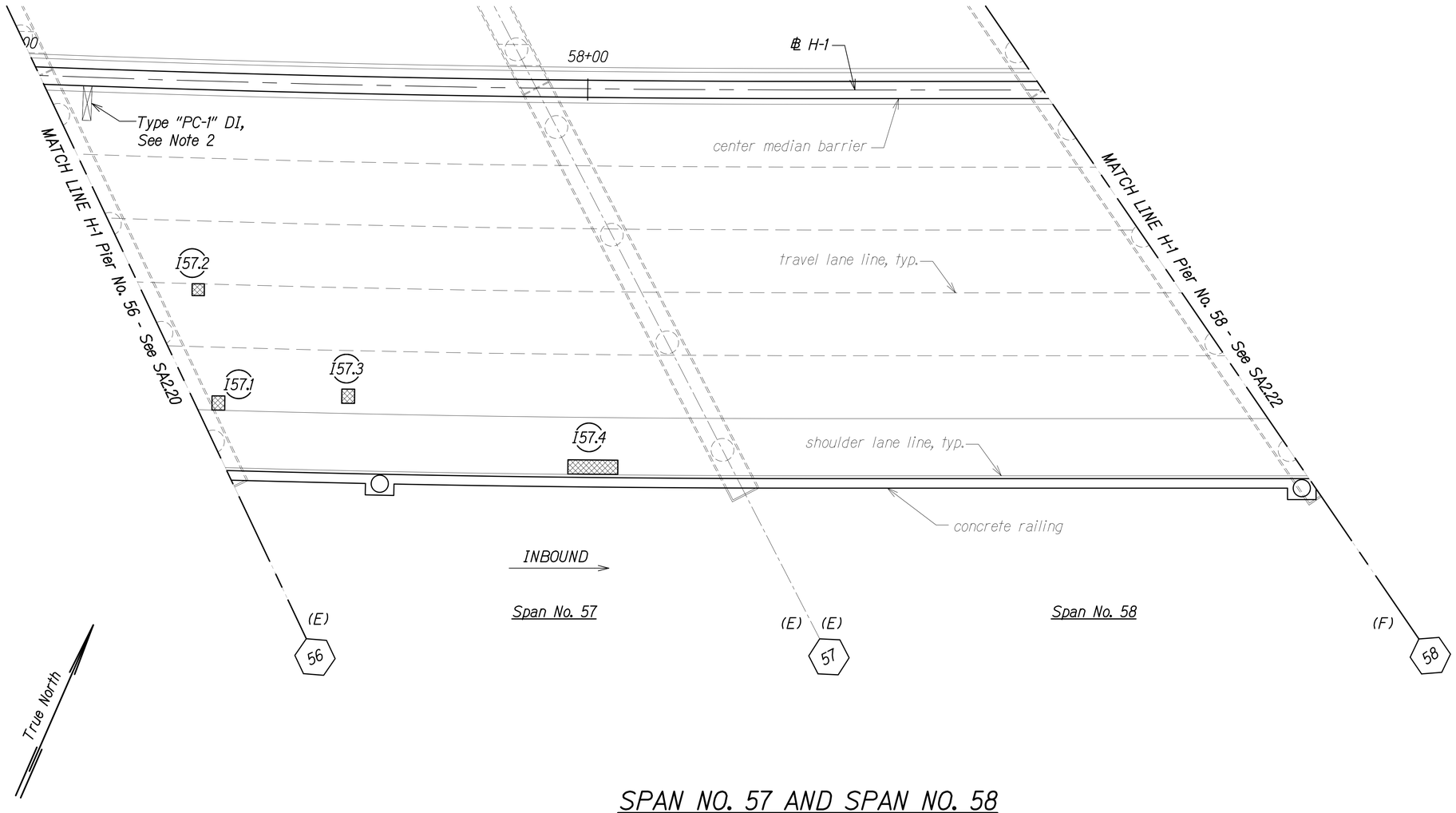

SPAN NO. 57 AND SPAN NO. 58

Scale: 1" = 10'-0"

LEGEND:

- # — Pier No.
- IX.# — Inbound Repair, See Schedules on SA3.1 to SA3.8
  - Defect No.
  - Span No.
  - Inbound
- Repair Area
- (E) Expansion Joint, See Note 1
- (F) Fixed Joint
- (H) Hinged Joint

NOTES:

1. All expansion joint compression seals shall be replaced. See SA10.1 to SA10.5.
2. Drain inlet grates shall be replaced and drain inlet frames shall be raised. See SA9.3 to SA9.5.

ERIC Y. MATSUMOTO
LICENSED PROFESSIONAL ENGINEER
NO. 10156-S
HAWAII, U.S.A.

THIS WORK WAS PREPARED BY ME OR UNDER MY SUPERVISION.

SIGNATURE — EXPIRATION DATE OF THE LICENSE 6-30-24

STATE OF HAWAII
DEPARTMENT OF TRANSPORTATION
HIGHWAYS DIVISION

PEARL CITY VIADUCT IB

REPAIR PLAN SPAN NO. 57 AND SPAN NO. 58

INTERSTATE ROUTE H-1 IMPROVEMENTS
Vicinity of Pearl City Viaduct to Waimalu Viaduct
Federal-Aid Project No. NH-H1-1(285)

Scale: As Noted — Date: May 2023

SHEET No. SA2.21 OF 23 SHEETS

ORIGINAL PLAN | SURVEY PLOTTED BY | DRAWN BY | TRACED BY | DESIGNED BY | QUANTITIES BY | CHECKED BY | DATE | NOTE BOOK No.

DRAWING NAME: Z:\OD ONGOING\22-001.B PEARL CITY VIADUCT REPAIRS\01 CAD\05-23-23 100PCT\PCVR-SA0201 PCV IB DECK REPAIR LAYPLAN.DWG PLOT TIME: 05-23-23, 3:51 PM

FED. ROAD DIST. NO.	STATE	FEDERAL AID PROJ. NO.	FISCAL YEAR	SHEET NO.	TOTAL SHEETS
HAWAII	HAW.	NH-H1-1(285)	2023	199	287

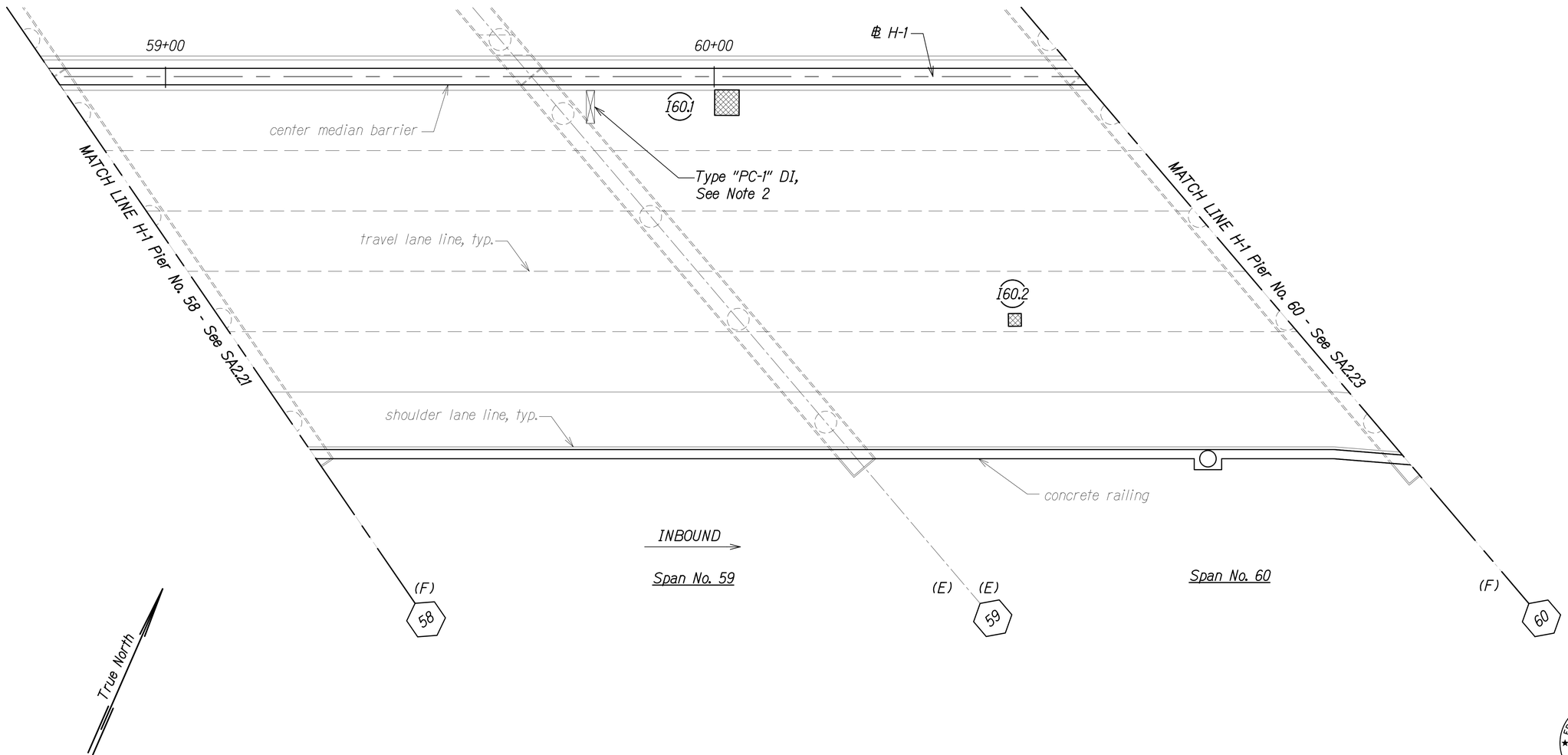

SPAN NO. 59 AND SPAN NO. 60

Scale: 1" = 10'-0"

LEGEND:

- # — Pier No.
- IX.# — Inbound Repair, See Schedules on SA3.1 to SA3.8
  - Defect No.
  - Span No.
  - Inbound
- Repair Area
- (E) Expansion Joint, See Note 1
- (F) Fixed Joint
- (H) Hinged Joint

NOTES:

1. All expansion joint compression seals shall be replaced. See SA10.1 to SA10.5.
2. Drain inlet grates shall be replaced and drain inlet frames shall be raised. See SA9.3 to SA9.5.

ERIC Y. MATSUMOTO
LICENSED PROFESSIONAL ENGINEER
NO. 10156-S
HAWAII, U.S.A.

THIS WORK WAS PREPARED BY ME OR UNDER MY SUPERVISION.

SIGNATURE — EXPIRATION DATE OF THE LICENSE 4-30-24

STATE OF HAWAII
DEPARTMENT OF TRANSPORTATION
HIGHWAYS DIVISION

PEARL CITY VIADUCT IB
REPAIR PLAN SPAN NO. 59 AND SPAN NO. 60

INTERSTATE ROUTE H-1 IMPROVEMENTS
Vicinity of Pearl City Viaduct to Waimalu Viaduct
Federal-Aid Project No. NH-H1-1(285)

Scale: As Noted — Date: May 2023

SHEET No. SA2.22 OF 23 SHEETS

ORIGINAL PLAN	SURVEY PLOTTED BY	DATE
	DRAWN BY	
NOTE BOOK	TRACED BY	
	DESIGNED BY	
No.	QUANTITIES BY	
	CHECKED BY	

DRAWING NAME: Z:\OD ONGOING\22-001.8 PEARL CITY VIADUCT REPAIRS\01 CAD\05-23-23 10PPCT\PCVR-SA2201 PCV IB DECK REPAIR LAYPLAN.DWG PLOT TIME: 05-23-23, 3:51 PM)

FED. ROAD DIST. NO.	STATE	FEDERAL AID PROJ. NO.	FISCAL YEAR	SHEET NO.	TOTAL SHEETS
HAWAII	HAW.	NH-H1-1(285)	2023	200	287

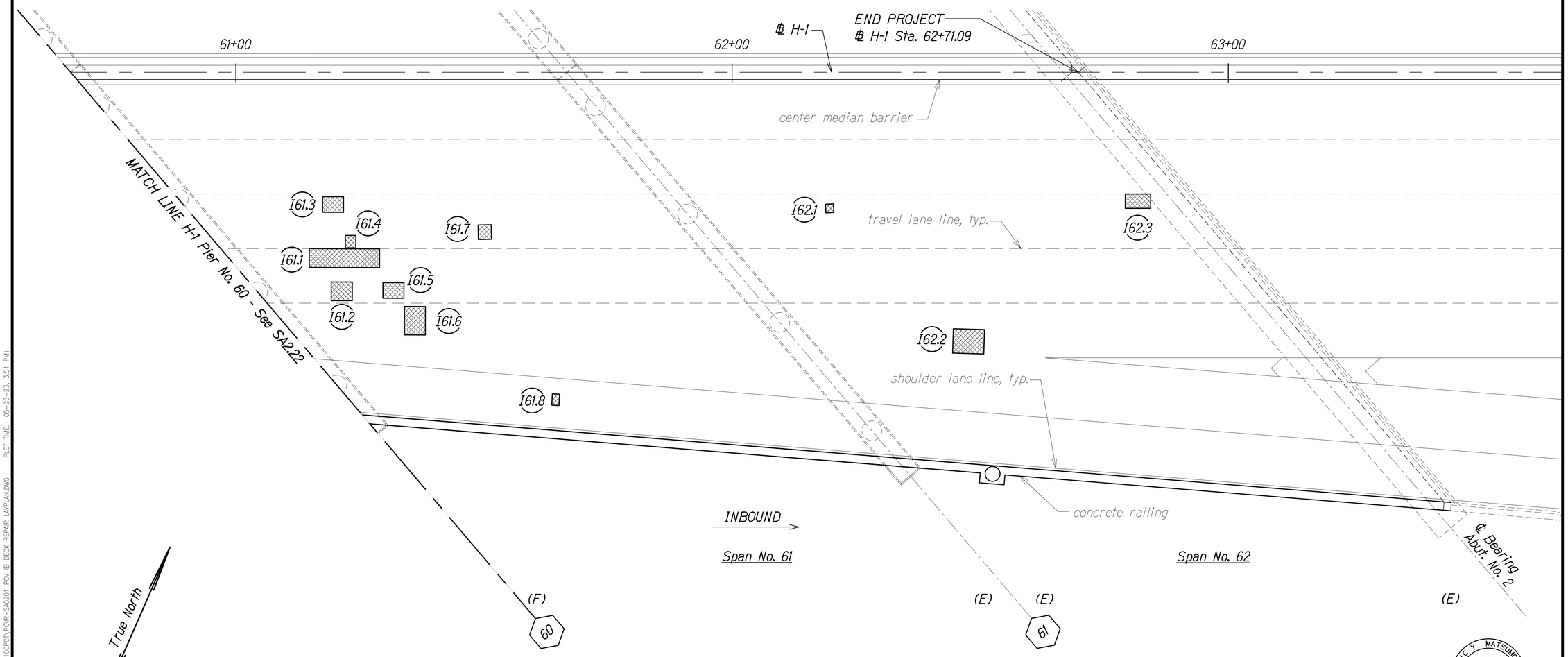

SPAN NO. 61 AND SPAN NO. 62

Scale: 1" = 10'-0"

LEGEND:

- # — Pier No.
- IX.# — Inbound Repair, See Schedules on SA3.1 to SA3.8
  - Defect No.
  - Span No.
  - Inbound
- Repair Area
- (E) Expansion Joint, See Note
- (F) Fixed Joint
- (H) Hinged Joint

NOTE:

All expansion joint compression seals shall be replaced. See SA10.1 to SA10.5.

ERIC Y. MATSUMOTO
LICENSED PROFESSIONAL ENGINEER
NO. 10156-S
HAWAII, U.S.A.

THIS WORK WAS PREPARED BY ME OR UNDER MY SUPERVISION.

SIGNATURE — EXPIRATION DATE OF THE LICENSE 4-30-24

STATE OF HAWAII
DEPARTMENT OF TRANSPORTATION
HIGHWAYS DIVISION

PEARL CITY VIADUCT IB
REPAIR PLAN SPAN NO. 61 AND SPAN NO. 62

INTERSTATE ROUTE H-1 IMPROVEMENTS
Vicinity of Pearl City Viaduct to Waimalu Viaduct
Federal-Aid Project No. NH-H1-1(285)

Scale: As Noted — Date: May 2023

SHEET No. SA2.23 OF 23 SHEETS

ORIGINAL PLAN — SURVEY PLOTTED BY — DRAWN BY — TRACED BY — DESIGNED BY — QUANTITIES BY — CHECKED BY — DATE — NOTE BOOK No.

DRAWING NAME: Z:\OD ONGOING\22-601.2 PEARL CITY VIADUCT REPAIRS\01 CAD\05-23-23 100PCT\PCVR-SA0201 POV IB DECK REPAIR LAYPLAN.DWG PLOT TIME: 05-23-23, 3:51 PM

FED. ROAD DIST. NO.	STATE	FEDERAL AID PROJ. NO.	FISCAL YEAR	SHEET NO.	TOTAL SHEETS
HAWAII	HAW.	NH-HI-1(285)	2023	201	287

PEARL CITY VIADUCT IB REPAIR SCHEDULE

DEFECT NO.	SPAN NO.	REPAIR DETAIL		AREA (SF)
I1.1	1	A SA3.1 SA8.1		12
I1.2	1			25
I1.3	1			4
I1.4	1			17
I1.5	1			14
I1.6	1			13
I1.7	1			4
I1.8	1			2
I1.9	1			4
I1.10	1			2
I1.11	1			5
I1.12	1			7
I1.13	1			4
I1.14	1			12
I2.1	2			29
I2.2	2			5
I2.3	2			5
I2.4	2			2
I2.5	2			14
I2.6	2			7

PEARL CITY VIADUCT IB REPAIR SCHEDULE

DEFECT NO.	SPAN NO.	REPAIR DETAIL		AREA (SF)
I2.7	2	A SA3.1 SA8.1		13
I2.8	2			8
I2.9	2			18
I2.10	2			13
I2.11	2			14
I2.12	2			8
I2.13	2			39
I2.14	2			6
I2.15	2			9
I2.16	2			4
I2.17	2			9
I2.18	2			5
I2.19	2			9
I2.20	2			6
I2.21	2			8
I2.22	2			3
I2.23	2			4
I2.24	2			5
I2.25	2			11
I2.26	2			11

PEARL CITY VIADUCT IB REPAIR SCHEDULE

DEFECT NO.	SPAN NO.	REPAIR DETAIL		AREA (SF)
I2.27	2	A SA3.1 SA8.1		11
I2.28	2			11
I3.1	3			15
I3.2	3			4
I3.3	3			49
I3.4	3			6
I3.5	3			7
I3.6	3			2
I3.7	3			6
I3.8	3			5
I3.9	3			5
I3.10	3			17
I3.11	3			3
I3.12	3			12
I3.13	3			4
I3.14	3			11
I3.15	3			3
I3.16	3			5
I4.1	4			2
I4.2	4			8

ERIC Y. MATSUMOTO
LICENSED PROFESSIONAL ENGINEER
NO. 10156-S
HAWAII, U.S.A.

THIS WORK WAS PREPARED BY ME OR UNDER MY SUPERVISION.

Eric Y. Matsumoto 4-30-24

SIGNATURE EXPIRATION DATE OF THE LICENSE

STATE OF HAWAII
DEPARTMENT OF TRANSPORTATION
HIGHWAYS DIVISION

PEARL CITY VIADUCT
IB REPAIR SCHEDULES

INTERSTATE ROUTE H-1 IMPROVEMENTS
Vicinity of Pearl City Viaduct to Waimalu Viaduct
Federal-Aid Project No. NH-HI-1(285)

Scale: None Date: May 2023

SHEET No. SA3.1 OF 8 SHEETS

ORIGINAL PLAN | SURVEY PLOTTED BY | DRAWN BY | TRACED BY | DESIGNED BY | QUANTITIES BY | CHECKED BY | DATE
NOTE BOOK No.

DRAWING NAME: Z:\OD ONGOING\22-001.8 PEARL CITY VIADUCT REPAIRS\01 CAD\05-23-23 100PCT\PCVR-SA0301 PCV IB SCHED REPAIR.DWG PLOT TIME: 05-24-23, 9:15 AM

FED. ROAD DIST. NO.	STATE	FEDERAL AID PROJ. NO.	FISCAL YEAR	SHEET NO.	TOTAL SHEETS
HAWAII	HAW.	NH-H1-1(285)	2023	202	287

PEARL CITY VIADUCT IB REPAIR SCHEDULE

DEFECT NO.	SPAN NO.	REPAIR DETAIL		AREA (SF)
I4.3	4	A SA3.2 SA8.1		5
I4.4	4			15
I4.5	4			6
I4.6	4			2
I4.7	4			13
I4.8	4			3
I4.9	4			2
I4.10	4			91
I4.11	4			29
I4.12	4			3
I4.13	4			3
I4.14	4			3
I4.15	4			4
I5.1	5			37
I5.2	5			2
I5.3	5			4
I5.4	5			1
I5.5	5			7
I5.6	5			4
I5.7	5			5

PEARL CITY VIADUCT IB REPAIR SCHEDULE

DEFECT NO.	SPAN NO.	REPAIR DETAIL		AREA (SF)
I5.8	5	A SA3.2 SA8.1		6
I5.9	5			6
I5.10	5			3
I5.11	5			2
I5.12	5			14
I5.13	5			7
I5.14	5			7
I6.1	6			1
I6.2	6			3
I7.1	7			2
I8.1	8			2
I8.2	8			3
I9.1	9			2
I9.2	9			2
I10.1	10			6
I10.2	10			2
I10.3	10			4
I10.4	10			6
I10.5	10			4
I10.6	10			1

PEARL CITY VIADUCT IB REPAIR SCHEDULE

DEFECT NO.	SPAN NO.	REPAIR DETAIL		AREA (SF)
I10.7	10	A SA3.2 SA8.1		18
I10.8	10			5
I10.9	10			5
I10.10	10			9
I10.11	10			2
I10.12	10			8
I10.13	10			2
I10.14	10			3
I10.15	10			28
I10.16	10			1
I10.17	10			2
I10.18	10			3
I10.19	10			2
I10.20	10			14
I10.21	10			3
I10.22	10			4
I10.23	10			1
I10.24	10			1
I10.25	10			2
I10.26	10			1

ERIC Y. MATSUMOTO
LICENSED PROFESSIONAL ENGINEER
NO. 10156-S
HAWAII, U.S.A.

THIS WORK WAS PREPARED BY ME OR UNDER MY SUPERVISION.

SIGNATURE — EXPIRATION DATE OF THE LICENSE 4-30-24

STATE OF HAWAII
DEPARTMENT OF TRANSPORTATION
HIGHWAYS DIVISION

PEARL CITY VIADUCT
IB REPAIR SCHEDULES

INTERSTATE ROUTE H-1 IMPROVEMENTS
Vicinity of Pearl City Viaduct to Waimalu Viaduct
Federal-Aid Project No. NH-H1-1(285)

Scale: None — Date: May 2023

SHEET No. SA3.2 OF 8 SHEETS

202

ORIGINAL PLAN — SURVEY PLOTTED BY — DRAWN BY — TRACED BY — DESIGNED BY — QUANTITIES BY — CHECKED BY — DATE
NOTE BOOK No.

DRAWING NAME: Z:\OD ONGOING\22-001.8 PEARL CITY VIADUCT REPAIRS\01 CAD\05-23-23 100PCT\PCVR-SA0301 PCV IB SCHED REPAIR.DWG PLOT TIME: 05-24-23, 9:15 AM

FED. ROAD DIST. NO.	STATE	FEDERAL AID PROJ. NO.	FISCAL YEAR	SHEET NO.	TOTAL SHEETS
HAWAII	HAW.	NH-H1-1(285)	2023	203	287

PEARL CITY VIADUCT IB REPAIR SCHEDULE

DEFECT NO.	SPAN NO.	REPAIR DETAIL		AREA (SF)
I11.1	11	A SA3.3	SA8.1	4
I11.2	11			7
I11.3	11			13
I11.4	11			1
I11.5	11			15
I11.6	11			3
I11.7	11			2
I11.8	11			4
I11.9	11			1
I11.10	11			79
I11.11	11			2
I11.12	11			3
I11.13	11			6
I11.14	11			3
I11.15	11			3
I11.16	11			2
I11.17	11			2
I11.18	11			4
I11.19	11			5
I11.20	11			9

PEARL CITY VIADUCT IB REPAIR SCHEDULE

DEFECT NO.	SPAN NO.	REPAIR DETAIL		AREA (SF)
I11.21	11	A SA3.3	SA8.1	2
I11.22	11			2
I11.23	11			2
I11.24	11/12			3
I12.1	11/12			5
I12.2	11/12			7
I12.3	12			2
I12.4	12			2
I12.5	12			3
I12.6	12			78
I12.7	12			13
I12.8	12			53
I12.9	12			8
I12.10	12			4
I12.11	12			3
I12.12	12			4
I12.13	12			8
I12.14	12			4
I14.1	14			1
I14.2	14			3

PEARL CITY VIADUCT IB REPAIR SCHEDULE

DEFECT NO.	SPAN NO.	REPAIR DETAIL		AREA (SF)
I14.3	14	A SA3.3	SA8.1	2
I15.1	15			5
I15.2	15			3
I15.3	15			3
I15.4	15			3
I15.5	15			16
I15.6	15			2
I16.1	16			24
I16.2	16			37
I16.3	16			1
I16.4	16			2
I16.5	16			17
I16.6	16			3
I16.7	16			2
I16.8	16			14
I16.9	16			1
I18.1	18			4
I18.2	18			2
I18.3	18			2
I19.1	19			7

ERIC Y. MATSUMOTO
LICENSED PROFESSIONAL ENGINEER
NO. 10156-S
HAWAII, U.S.A.

THIS WORK WAS PREPARED BY ME OR UNDER MY SUPERVISION.

Eric Y. Matsumoto 4-30-24
SIGNATURE EXPIRATION DATE OF THE LICENSE

STATE OF HAWAII
DEPARTMENT OF TRANSPORTATION
HIGHWAYS DIVISION

PEARL CITY VIADUCT
IB REPAIR SCHEDULES

INTERSTATE ROUTE H-1 IMPROVEMENTS
Vicinity of Pearl City Viaduct to Waimalu Viaduct
Federal-Aid Project No. NH-H1-1(285)

Scale: None Date: May 2023

SHEET No. SA3.3 OF 8 SHEETS

ORIGINAL PLAN | SURVEY PLOTTED BY | DRAWN BY | TRACED BY | DESIGNED BY | QUANTITIES BY | CHECKED BY | DATE
NOTE BOOK No.

DRAWING NAME: Z:\OD ONGOING\22-001.8 PEARL CITY VIADUCT REPAIRS\01 CAD\05-23-23 100PCT\PCVR-SA0301 PCV IB SCHED REPAIR.DWG PLOT TIME: 05-24-23, 9:16 AM

FED. ROAD DIST. NO.	STATE	FEDERAL AID PROJ. NO.	FISCAL YEAR	SHEET NO.	TOTAL SHEETS
HAWAII	HAW.	NH-HI-1(285)	2023	204	287

PEARL CITY VIADUCT IB REPAIR SCHEDULE

DEFECT NO.	SPAN NO.	REPAIR DETAIL		AREA (SF)
I19.2	19	A SA3.4	SA8.1	1
I20.1	19/20			44
I20.2	20			4
I20.3	20			8
I20.4	20			10
I20.5	20			1
I21.1	21			4
I21.2	21			6
I21.3	21			9
I21.4	21			6
I21.5	21			4
I21.6	21			7
I21.7	21			3
I21.8	21			3
I21.9	21			1
I22.1	22			2
I22.2	22			3
I22.3	22			24
I22.4	22			1
I22.5	22			3

PEARL CITY VIADUCT IB REPAIR SCHEDULE

DEFECT NO.	SPAN NO.	REPAIR DETAIL		AREA (SF)
I22.6	22	A SA3.4	SA8.1	1
I23.1	23			2
I23.2	23			7
I23.3	23			22
I23.4	23			3
I23.5	23/24			6
I24.1	24			5
I24.2	24			3
I24.3	24			6
I24.4	24			2
I24.5	24			15
I24.6	24			1
I24.7	24			39
I25.1	25			3
I25.2	25			3
I25.3	25			7
I25.4	25			57
I25.5	25			3
I25.6	25			9
I25.7	25			2

PEARL CITY VIADUCT IB REPAIR SCHEDULE

DEFECT NO.	SPAN NO.	REPAIR DETAIL		AREA (SF)
I25.8	25	A SA3.4	SA8.1	2
I25.9	25			4
I25.10	25			13
I25.11	25			151
I25.12	25			7
I25.13	25			5
I25.14	25			35
I25.15	25			6
I25.16	25			19
I25.17	25/26			18
I26.1	25/26			8
I26.2	26			22
I26.3	26			15
I26.4	26			3
I26.5	26			4
I26.6	26			1
I26.7	26			3
I26.8	26			4
I26.9	26			6
I26.10	26			3

ERIC Y. MATSUMOTO
LICENSED PROFESSIONAL ENGINEER
NO. 10156-S
HAWAII, U.S.A.

THIS WORK WAS PREPARED BY ME OR UNDER MY SUPERVISION.

SIGNATURE — EXPIRATION DATE OF THE LICENSE 4-30-24

STATE OF HAWAII
DEPARTMENT OF TRANSPORTATION
HIGHWAYS DIVISION

PEARL CITY VIADUCT
IB REPAIR SCHEDULES

INTERSTATE ROUTE H-1 IMPROVEMENTS
Vicinity of Pearl City Viaduct to Waimalu Viaduct
Federal-Aid Project No. NH-HI-1(285)

Scale: None — Date: May 2023

SHEET No. SA3.4 OF 8 SHEETS

204

ORIGINAL PLAN — SURVEY PLOTTED BY — DRAWN BY — TRACED BY — DESIGNED BY — QUANTITIES BY — CHECKED BY — DATE
NOTE BOOK No.

DRAWING NAME: Z:\OD ONGOING\22-0018 PEARL CITY VIADUCT REPAIRS\01 CAD\05-23-23 100PCT\PCVR-SA0301 PCV IB SCHED REPAIR.DWG PLOT TIME: 05-24-23, 9:16 AM

FED. ROAD DIST. NO.	STATE	FEDERAL AID PROJ. NO.	FISCAL YEAR	SHEET NO.	TOTAL SHEETS
HAWAII	HAW.	NH-HI-1(285)	2023	205	287

PEARL CITY VIADUCT IB REPAIR SCHEDULE

DEFECT NO.	SPAN NO.	REPAIR DETAIL		AREA (SF)
I27.1	27	A SA3.5	SA8.1	3
I27.2	27			4
I27.3	27			5
I27.4	27			2
I27.5	27			9
I27.6	27			9
I27.7	27			4
I27.8	27			6
I27.9	27			6
I27.10	27			15
I27.11	27			5
I27.12	27			31
I27.13	27			8
I27.14	27			11
I27.15	27/28			17
I27.16	27/28			3
I28.1	28			4
I28.2	28			4
I28.3	28			5
I28.4	28			3

PEARL CITY VIADUCT IB REPAIR SCHEDULE

DEFECT NO.	SPAN NO.	REPAIR DETAIL		AREA (SF)
I28.5	28	A SA3.5	SA8.1	57
I28.6	28			6
I28.7	28			8
I28.8	28			11
I28.9	28			4
I28.10	28			8
I28.11	28			2
I28.12	28			24
I28.13	28			5
I28.14	28			24
I28.15	28			9
I28.16	28			3
I29.1	29			14
I29.2	29			7
I30.1	30			4
I32.1	32			18
I32.2	32			3
I32.3	32			9
I32.4	32			3
I32.5	32			7

PEARL CITY VIADUCT IB REPAIR SCHEDULE

DEFECT NO.	SPAN NO.	REPAIR DETAIL		AREA (SF)
I32.6	32	A SA3.5	SA8.1	5
I32.7	32			8
I33.1	33			4
I33.2	33			39
I34.1	34			6
I34.2	34			2
I35.1	35			3
I35.2	35			3
I35.3	35			4
I35.4	35			4
I35.5	35			2
I35.6	35			3
I35.7	35			111
I35.8	35			55
I35.9	35			2
I35.10	35			3
I35.11	35			5
I35.12	35			7
I35.13	35			26
I35.14	35			5

ERIC Y. MATSUMOTO
LICENSED PROFESSIONAL ENGINEER
NO. 10156-S
HAWAII, U.S.A.

THIS WORK WAS PREPARED BY ME OR UNDER MY SUPERVISION.

SIGNATURE — EXPIRATION DATE OF THE LICENSE 6-30-24

STATE OF HAWAII
DEPARTMENT OF TRANSPORTATION
HIGHWAYS DIVISION

PEARL CITY VIADUCT
IB REPAIR SCHEDULES

INTERSTATE ROUTE H-1 IMPROVEMENTS
Vicinity of Pearl City Viaduct to Waimalu Viaduct
Federal-Aid Project No. NH-HI-1(285)

Scale: None — Date: May 2023

SHEET No. SA3.5 OF 8 SHEETS

ORIGINAL PLAN | NOTE BOOK No. | SURVEY PLOTTED BY | DRAWN BY | TRACED BY | DESIGNED BY | QUANTITIES BY | CHECKED BY | DATE

DRAWING NAME: Z:\OD ONGOING\22-001.8 PEARL CITY VIADUCT REPAIRS\01 CAD\05-23-23 100PCT\PCVR-SA0301 PCV IB SCHED REPAIR.DWG PLOT TIME: 05-24-23, 9:16 AM

FED. ROAD DIST. NO.	STATE	FEDERAL AID PROJ. NO.	FISCAL YEAR	SHEET NO.	TOTAL SHEETS
HAWAII	HAW.	NH-HI-1(285)	2023	206	287

PEARL CITY VIADUCT IB REPAIR SCHEDULE

DEFECT NO.	SPAN NO.	REPAIR DETAIL		AREA (SF)
I36.1	36	A SA3.6 SA8.1		17
I36.2	36			2
I36.3	36			11
I36.4	36			3
I36.5	36			8
I36.6	36			3
I36.7	36			8
I36.8	36			6
I36.9	36			5
I36.10	36			3
I36.11	36			5
I37.1	37			1
I37.2	37			3
I37.3	37			2
I37.4	37			2
I37.5	37			2
I37.6	37			2
I37.7	37			2
I37.8	37			2
I37.9	37/38			3

PEARL CITY VIADUCT IB REPAIR SCHEDULE

DEFECT NO.	SPAN NO.	REPAIR DETAIL		AREA (SF)
I38.1	38	A SA3.6 SA8.1		14
I38.2	38			6
I38.3	38			1
I38.4	38			2
I38.5	38			2
I38.6	38			2
I39.1	38/39			2
I39.2	39			3
I39.3	39			4
I39.4	39			2
I39.5	39			2
I39.6	39			8
I39.7	39			6
I39.8	39			7
I40.1	40			8
I40.2	40			2
I40.3	40			3
I40.4	40			1
I40.5	40			1
I40.6	40			3

PEARL CITY VIADUCT IB REPAIR SCHEDULE

DEFECT NO.	SPAN NO.	REPAIR DETAIL		AREA (SF)
I40.7	40	A SA3.6 SA8.1		2
I40.8	40			7
I40.9	40/41			54
I41.1	41			34
I41.2	41			5
I41.3	41			5
I41.4	41			13
I41.5	41			2
I41.6	41			1
I41.7	41			3
I42.1	42			2
I42.2	42			1
I43.1	43			5
I43.2	43			6
I43.3	43			2
I43.4	43			2
I43.5	43			2
I45.1	44/45			73
I45.2	45			3
I45.3	45			2

ERIC Y. MATSUMOTO
LICENSED PROFESSIONAL ENGINEER
NO. 10156-S
HAWAII, U.S.A.

THIS WORK WAS PREPARED BY ME OR UNDER MY SUPERVISION.

SIGNATURE — EXPIRATION DATE OF THE LICENSE 4-30-24

STATE OF HAWAII
DEPARTMENT OF TRANSPORTATION
HIGHWAYS DIVISION

PEARL CITY VIADUCT
IB REPAIR SCHEDULES

INTERSTATE ROUTE H-1 IMPROVEMENTS
Vicinity of Pearl City Viaduct to Waimalu Viaduct
Federal-Aid Project No. NH-HI-1(285)

Scale: None — Date: May 2023

SHEET No. SA3.6 OF 8 SHEETS

ORIGINAL PLAN | SURVEY PLOTTED BY | DRAWN BY | TRACED BY | DESIGNED BY | QUANTITIES BY | CHECKED BY | DATE
NOTE BOOK No.

DRAWING NAME: Z:\OD ONGOING\22-001B PEARL CITY VIADUCT REPAIRS\01 CAD\05-23-23 100PCT\PCVR-SA0301 PCV IB SCHED REPAIR.DWG PLOT TIME: 05-24-23, 9:16 AM

FED. ROAD DIST. NO.	STATE	FEDERAL AID PROJ. NO.	FISCAL YEAR	SHEET NO.	TOTAL SHEETS
HAWAII	HAW.	NH-H1-1(285)	2023	207	287

PEARL CITY VIADUCT IB REPAIR SCHEDULE

DEFECT NO.	SPAN NO.	REPAIR DETAIL		AREA (SF)
I45.4	45	A SA3.7	SA8.1	2
I46.1	46			1
I46.2	46			1
I46.3	46			4
I46.4	46			4
I47.1	47			3
I47.2	47			62
I47.3	47			4
I47.4	47			7
I48.1	48			57
I48.2	48			50
I48.3	48			12
I48.4	48			12
I48.5	48			20
I48.6	48			10
I48.7	48			20
I48.8	48/49			32
I48.9	48/49			14
I49.1	48/49			26
I49.2	49			5

PEARL CITY VIADUCT IB REPAIR SCHEDULE

DEFECT NO.	SPAN NO.	REPAIR DETAIL		AREA (SF)
I49.3	49	A SA3.7	SA8.1	5
I49.4	49			5
I49.5	49			4
I49.6	49			5
I49.7	49			62
I49.8	49			4
I49.9	49			56
I49.10	49			2
I49.11	49			2
I49.12	49			2
I49.13	49			49
I49.14	49			15
I49.15	49			10
I50.1	50			19
I50.2	50			4
I50.3	50			4
I50.4	50			3
I50.5	50			21
I50.6	50			4
I50.7	50			11

PEARL CITY VIADUCT IB REPAIR SCHEDULE

DEFECT NO.	SPAN NO.	REPAIR DETAIL		AREA (SF)
I50.8	50	A SA3.7	SA8.1	50
I50.9	50			21
I50.10	50			3
I50.11	50			20
I50.12	50			6
I50.13	50			10
I50.14	50			14
I51.1	50/51			23
I51.2	51			6
I51.3	51			4
I51.4	51			2
I51.5	51			13
I51.6	51			13
I51.7	51			20
I51.8	51			2
I51.9	51			46
I51.10	51			5
I51.11	51			2
I51.12	51			3
I51.13	51			2

ERIC Y. MATSUMOTO
LICENSED PROFESSIONAL ENGINEER
NO. 10156-S
HAWAII, U.S.A.

THIS WORK WAS PREPARED BY ME OR UNDER MY SUPERVISION.

SIGNATURE — EXPIRATION DATE OF THE LICENSE 4-30-24

STATE OF HAWAII
DEPARTMENT OF TRANSPORTATION
HIGHWAYS DIVISION

PEARL CITY VIADUCT
IB REPAIR SCHEDULES

INTERSTATE ROUTE H-1 IMPROVEMENTS
Vicinity of Pearl City Viaduct to Waimalu Viaduct
Federal-Aid Project No. NH-H1-1(285)

Scale: None — Date: May 2023

SHEET No. SA3.7 OF 8 SHEETS

ORIGINAL PLAN — NOTE BOOK No. — SURVEY PLOTTED BY — DRAWN BY — TRACED BY — DESIGNED BY — QUANTITIES BY — CHECKED BY — DATE

DRAWING NAME: Z:\OD ONGOING\22-001.8 PEARL CITY VIADUCT REPAIRS\01 CAD\05-23-23 100PCT\PCVR-SA0301 PCV IB SCHED REPAIR.DWG PLOT TIME: 05-24-23, 9:17 AM

FED. ROAD DIST. NO.	STATE	FEDERAL AID PROJ. NO.	FISCAL YEAR	SHEET NO.	TOTAL SHEETS
HAWAII	HAW.	NH-HI-1(285)	2023	208	287

PEARL CITY VIADUCT IB REPAIR SCHEDULE

DEFECT NO.	SPAN NO.	REPAIR DETAIL		AREA (SF)
I51.14	51	A SA3.8	SA8.1	2
I51.15	51			8
I51.16	51/52			42
I52.1	51/52			39
I52.2	52			16
I52.3	52			64
I52.4	52			2
I52.5	52			2
I52.6	52			2
I52.7	52			3
I53.1	53			11
I53.2	53			4
I53.3	53			34
I53.4	53			6
I53.5	53			6
I53.6	53			25
I53.7	53			2
I53.8	53			2
I53.9	53			10
I54.1	54			29

PEARL CITY VIADUCT IB REPAIR SCHEDULE

DEFECT NO.	SPAN NO.	REPAIR DETAIL		AREA (SF)
I54.2	54	A SA3.8	SA8.1	3
I54.3	54			2
I54.4	54			2
I54.5	54			11
I54.6	54			6
I54.7	54			13
I54.8	54			3
I55.1	55			6
I55.2	55			9
I55.3	55			11
I55.4	55			5
I56.1	56			10
I56.2	56			18
I56.3	56			27
I56.4	56			2
I56.5	56			9
I56.6	56			5
I56.7	56			22
I56.8	56			6
I57.1	57			6

PEARL CITY VIADUCT IB REPAIR SCHEDULE

DEFECT NO.	SPAN NO.	REPAIR DETAIL		AREA (SF)
I57.2	57	A SA3.8	SA8.1	5
I57.3	57			6
I57.4	57			22
I60.1	60			21
I60.2	60			5
I61.1	61			54
I61.2	61			16
I61.3	61			13
I61.4	61			5
I61.5	61			13
I61.6	61			24
I61.7	61			8
I61.8	61			3
I62.1	62			3
I62.2	62			31
I62.3	62			15
	TOTAL			4,903

ERIC Y. MATSUMOTO
LICENSED PROFESSIONAL ENGINEER
NO. 10156-S
HAWAII, U.S.A.

THIS WORK WAS PREPARED BY ME OR UNDER MY SUPERVISION.

SIGNATURE — EXPIRATION DATE OF THE LICENSE 4-30-24

STATE OF HAWAII
DEPARTMENT OF TRANSPORTATION
HIGHWAYS DIVISION

PEARL CITY VIADUCT
IB REPAIR SCHEDULES

INTERSTATE ROUTE H-1 IMPROVEMENTS
Vicinity of Pearl City Viaduct to Waimalu Viaduct
Federal-Aid Project No. NH-HI-1(285)

Scale: None — Date: May 2023

SHEET No. SA3.8 OF 8 SHEETS

208

ORIGINAL PLAN | SURVEY PLOTTED BY | DRAWN BY | TRACED BY | DESIGNED BY | QUANTITIES BY | CHECKED BY | DATE
NOTE BOOK No.

DRAWING NAME: Z:\OD ONGOING\22-0018 PEARL CITY VIADUCT REPAIRS\01 CAD\05-23-23 100PCT\PCVR-SA0301 PCV IB SCHED REPAIR.DWG PLOT TIME: 05-24-23, 9:17 AM

FED. ROAD DIST. NO.	STATE	FEDERAL AID PROJ. NO.	FISCAL YEAR	SHEET NO.	TOTAL SHEETS
HAWAII	HAW.	NH-H1-1(285)	2023	209	287

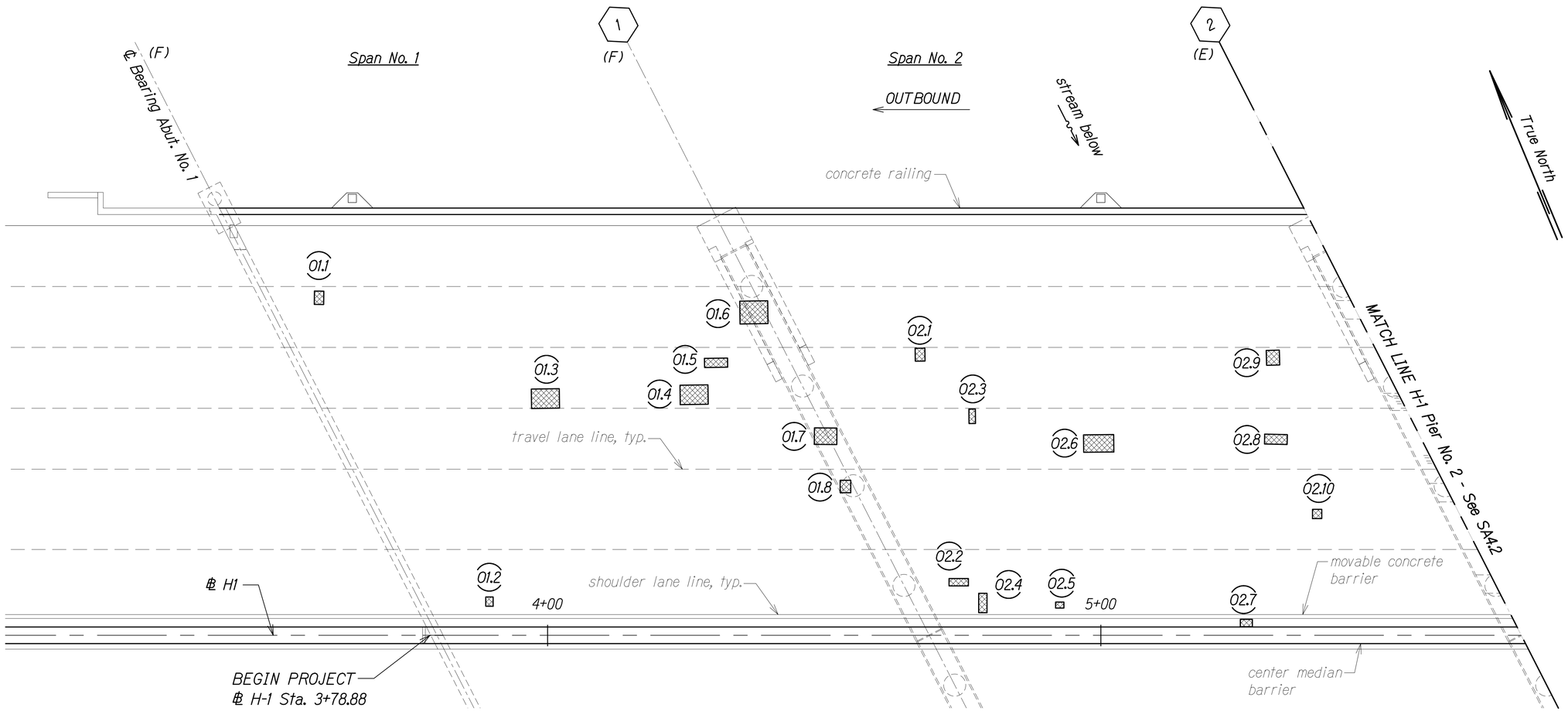

LEGEND:

- # — Pier No.
- OX.# — Outbound Repair, See Schedules on SA5.1 to SA5.6
  - Defect No.
  - Span No.
  - Outbound
- Repair Area
- (E) Expansion Joint, See Note
- (F) Fixed Joint
- (H) Hinged Joint

SPAN NO. 1 AND SPAN NO. 2

Scale: 1" = 10'-0"

NOTE:

All expansion joint compression seals shall be replaced. See SA10.1 to SA10.5.

ERIC Y. MATSUMOTO
LICENSED PROFESSIONAL ENGINEER
NO. 10156-S
HAWAII, U.S.A.

THIS WORK WAS PREPARED BY ME OR UNDER MY SUPERVISION.

SIGNATURE — EXPIRATION DATE OF THE LICENSE 4-30-24

STATE OF HAWAII
DEPARTMENT OF TRANSPORTATION
HIGHWAYS DIVISION

PEARL CITY VIADUCT OB
REPAIR PLAN SPAN NO. 1 AND SPAN NO. 2

INTERSTATE ROUTE H-1 IMPROVEMENTS
Vicinity of Pearl City Viaduct to Waimalu Viaduct
Federal-Aid Project No. NH-H1-1(285)

Scale: As Noted — Date: May 2023

SHEET No. SA4.1 OF 23 SHEETS

209

ORIGINAL PLAN	SURVEY PLOTTED BY	DATE
	DRAWN BY	"
NOTE BOOK	TRACED BY	"
	DESIGNED BY	"
No.	QUANTITIES BY	"
	CHECKED BY	"

DRAWING NAME: Z:\OD ONGOING\22-0018 PEARL CITY VIADUCT REPAIRS\01 CAD\05-23-23 100PCT\PCVR-SA0401 PCV OB DECK REPAIR LAYPLAN.DWG PLOT TIME: 05-23-23, 3:54 PM

FED. ROAD DIST. NO.	STATE	FEDERAL AID PROJ. NO.	FISCAL YEAR	SHEET NO.	TOTAL SHEETS
HAWAII	HAW.	NH-HI-1(285)	2023	210	287

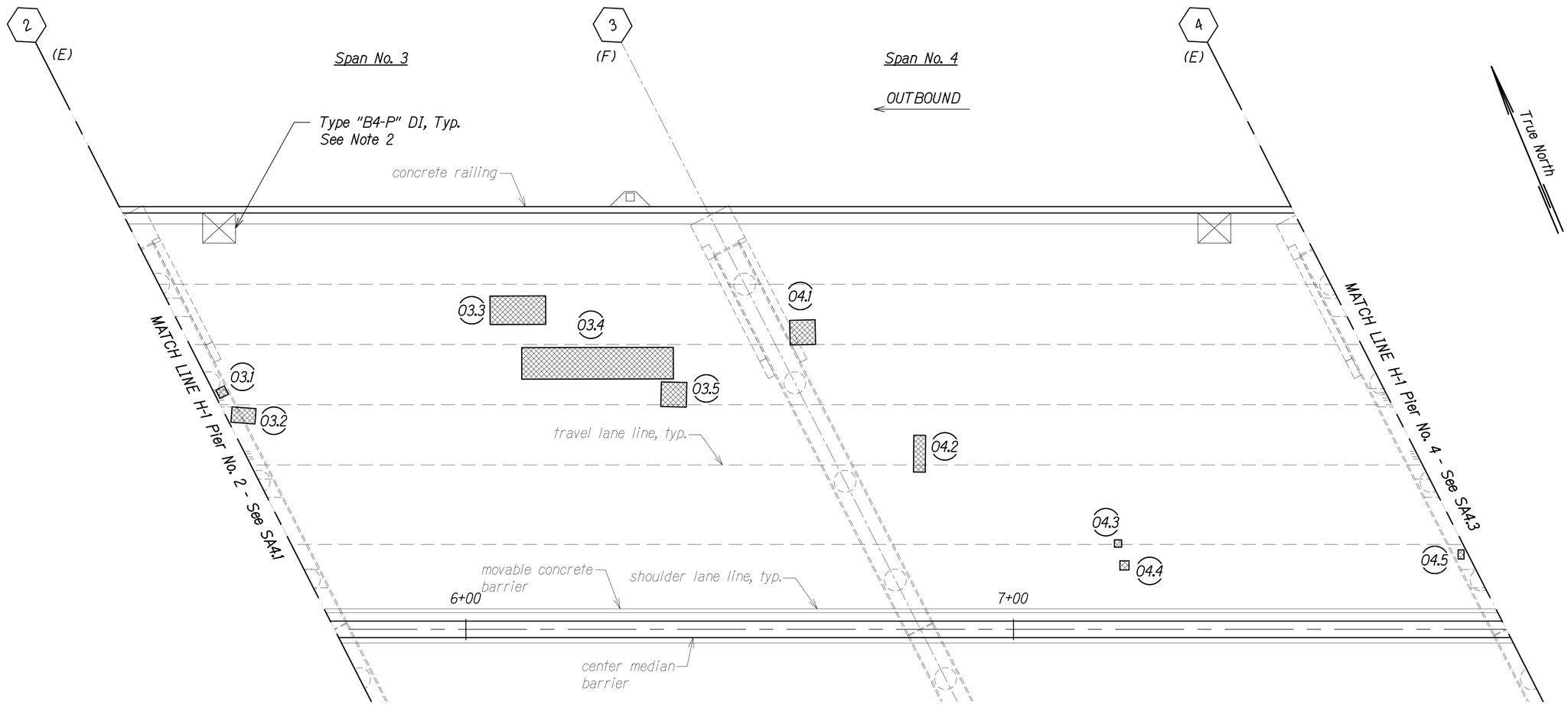

SPAN NO. 3 AND SPAN NO. 4

Scale: 1" = 10'-0"

LEGEND:

- # — Pier No.
- OX.# — Outbound Repair, See Schedules on SA5.1 to SA5.6
  - Defect No.
  - Span No.
  - Outbound
- Repair Area
- (E) Expansion Joint, See Note 1
- (F) Fixed Joint
- (H) Hinged Joint

NOTES:

1. All expansion joint compression seals shall be replaced. See SA10.1 to SA10.5.
2. Drain inlet grates shall be replaced and drain inlet frames shall be raised. See SA9.6 to SA9.8.

ERIC Y. MATSUMOTO
LICENSED PROFESSIONAL ENGINEER
NO. 10156-S
HAWAII, U.S.A.

THIS WORK WAS PREPARED BY ME OR UNDER MY SUPERVISION.

SIGNATURE — EXPIRATION DATE OF THE LICENSE 4-30-24

STATE OF HAWAII
DEPARTMENT OF TRANSPORTATION
HIGHWAYS DIVISION

PEARL CITY VIADUCT OB
REPAIR PLAN SPAN NO. 3 AND SPAN NO. 4

INTERSTATE ROUTE H-1 IMPROVEMENTS
Vicinity of Pearl City Viaduct to Waimalu Viaduct
Federal-Aid Project No. NH-HI-1(285)

Scale: As Noted — Date: May 2023

SHEET No. SA4.2 OF 23 SHEETS

ORIGINAL PLAN	SURVEY PLOTTED BY	DATE
	DRAWN BY	
NOTE BOOK	TRACED BY	
	DESIGNED BY	
No.	QUANTITIES BY	
	CHECKED BY	

DRAWING NAME: Z:\OD ONGOING\22-001.8 PEARL CITY VIADUCT REPAIRS\01 CAD\05-23-23 1\OPCT\PCVR-SA0401 PCV OB DECK REPAIR LAYPLAN.DWG PLOT TIME: (05-23-23, 3:54 PM)

FED. ROAD DIST. NO.	STATE	FEDERAL AID PROJ. NO.	FISCAL YEAR	SHEET NO.	TOTAL SHEETS
HAWAII	HAW.	NH-H1-1(285)	2023	211	287

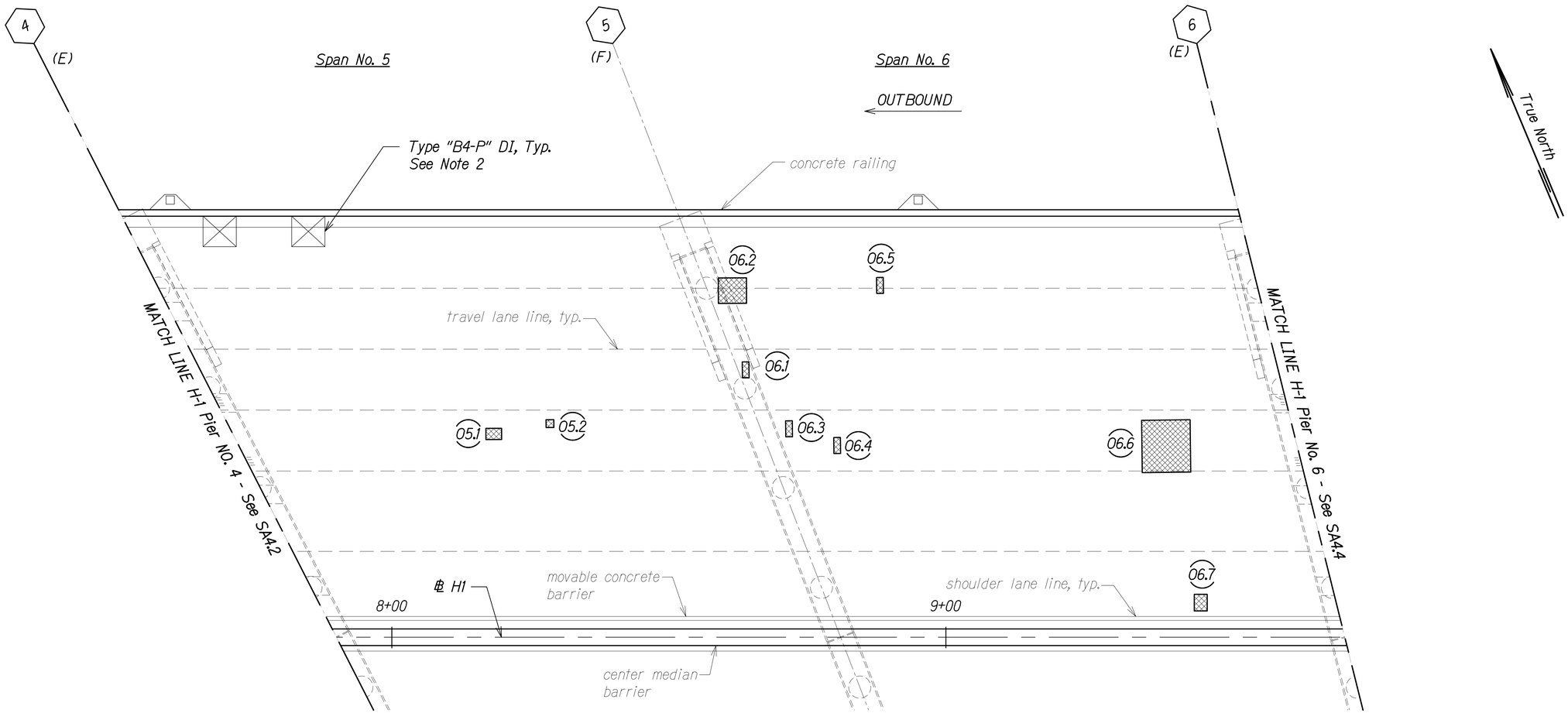

SPAN NO. 5 AND SPAN NO. 6

Scale: 1" = 10'-0"

LEGEND:

- # — Pier No.
- OX.# — Outbound Repair, See Schedules on SA5.1 to SA5.6
  - Defect No.
  - Span No.
  - Outbound
- Repair Area
- (E) Expansion Joint, See Note 1
- (F) Fixed Joint
- (H) Hinged Joint

NOTES:

1. All expansion joint compression seals shall be replaced. See SA10.1 to SA10.5.
2. Drain inlet grates shall be replaced and drain inlet frames shall be raised. See SA9.6 to SA9.8.

ERIC Y. MATSUMOTO
LICENSED PROFESSIONAL ENGINEER
NO. 10156-S
HAWAII, U.S.A.

THIS WORK WAS PREPARED BY ME OR UNDER MY SUPERVISION.

SIGNATURE — EXPIRATION DATE OF THE LICENSE 4-30-24

STATE OF HAWAII
DEPARTMENT OF TRANSPORTATION
HIGHWAYS DIVISION

PEARL CITY VIADUCT OB
REPAIR PLAN SPAN NO. 5 AND SPAN NO. 6

INTERSTATE ROUTE H-1 IMPROVEMENTS
Vicinity of Pearl City Viaduct to Waimalu Viaduct
Federal-Aid Project No. NH-H1-1(285)

Scale: As Noted — Date: May 2023

SHEET No. SA4.3 OF 23 SHEETS

ORIGINAL PLAN — NOTE BOOK No. — SURVEY PLOTTED BY — DRAWN BY — TRACED BY — DESIGNED BY — QUANTITIES BY — CHECKED BY — DATE

DRAWING NAME: Z:\OD ONGOING\22-001.B PEARL CITY VIADUCT REPAIRS\01 CAD\05-23-23 ISOPCT\PCVR-SA0401 PCV OB DECK REPAIR LAYPLAN.DWG PLOT TIME: (05-23-23, 3:54 PM)

FED. ROAD DIST. NO.	STATE	FEDERAL AID PROJ. NO.	FISCAL YEAR	SHEET NO.	TOTAL SHEETS
HAWAII	HAW.	NH-H1-1(285)	2023	212	287

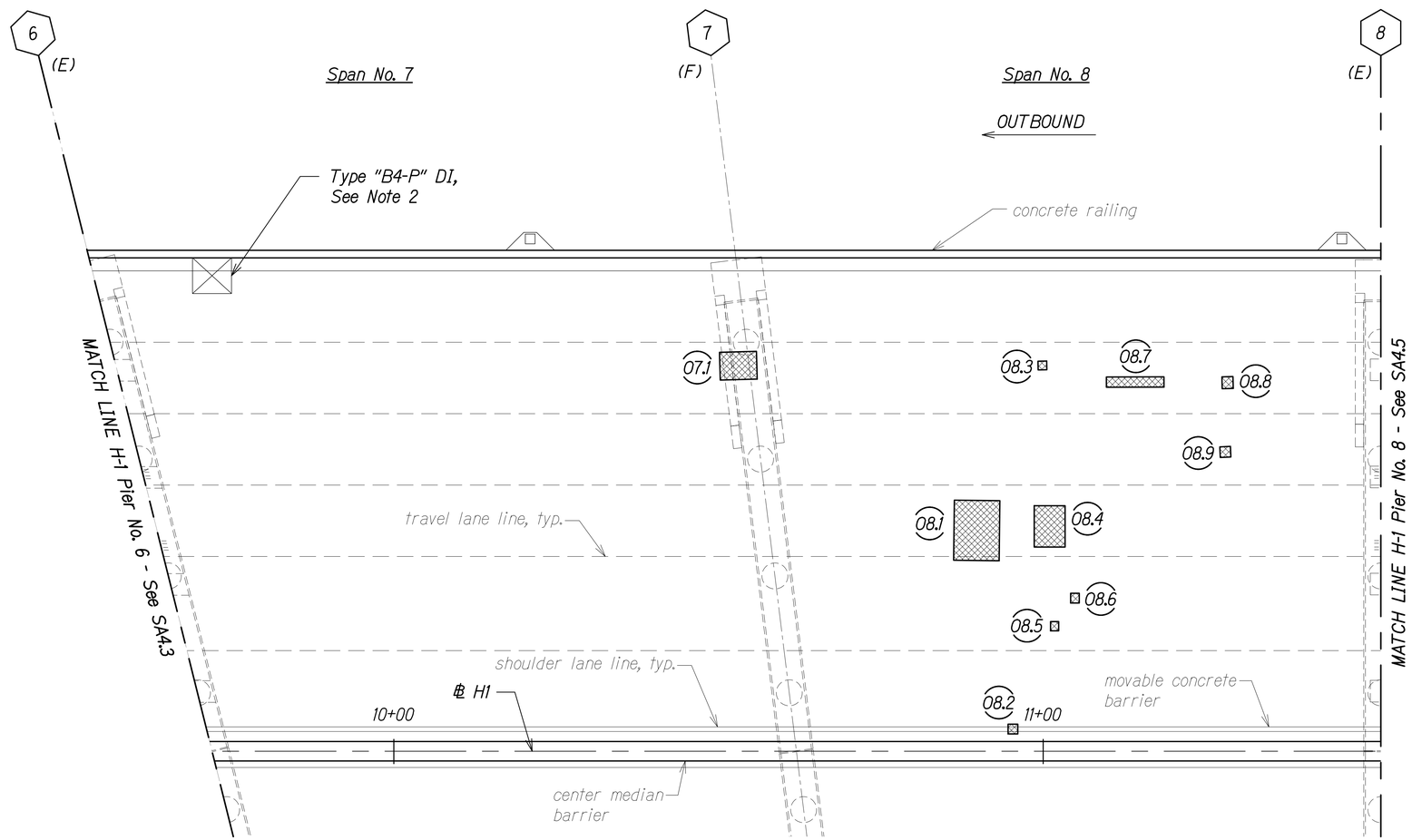

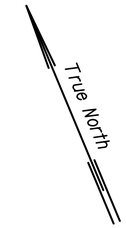

SPAN NO. 7 AND SPAN NO. 8

Scale: 1" = 10'-0"

LEGEND:

- # — Pier No.
- OX.# — Outbound Repair, See Schedules on SA5.1 to SA5.6
  - Defect No.
  - Span No.
  - Outbound
- Repair Area
- (E) Expansion Joint, See Note 1
- (F) Fixed Joint
- (H) Hinged Joint

NOTES:

1. All expansion joint compression seals shall be replaced. See SA10.1 to SA10.5.
2. Drain inlet grates shall be replaced and drain inlet frames shall be raised. See SA9.6 to SA9.8.

ERIC Y. MATSUMOTO
LICENSED PROFESSIONAL ENGINEER
NO. 10156-S
HAWAII, U.S.A.

THIS WORK WAS PREPARED BY ME OR UNDER MY SUPERVISION.

SIGNATURE — EXPIRATION DATE OF THE LICENSE 4-30-24

STATE OF HAWAII
DEPARTMENT OF TRANSPORTATION
HIGHWAYS DIVISION

PEARL CITY VIADUCT OB
REPAIR PLAN SPAN NO. 7 AND SPAN NO. 8
INTERSTATE ROUTE H-1 IMPROVEMENTS
Vicinity of Pearl City Viaduct to Waimalu Viaduct
Federal-Aid Project No. NH-H1-1(285)

Scale: As Noted — Date: May 2023

SHEET No. SA4.4 OF 23 SHEETS

ORIGINAL PLAN — SURVEY PLOTTED BY — DRAWN BY — TRACED BY — DESIGNED BY — QUANTITIES BY — CHECKED BY — DATE
NOTE BOOK No.

DRAWING NAME: Z:\OD ONGOING\22-0013 PEARL CITY VIADUCT REPAIRS\01 CAD\05-23-23 100PCT\POR-SA0401 POV OB DECK REPAIR LAYPLAN.DWG PLOT TIME: 05-23-23 3:55 PM

FED. ROAD DIST. NO.	STATE	FEDERAL AID PROJ. NO.	FISCAL YEAR	SHEET NO.	TOTAL SHEETS
HAWAII	HAW.	NH-H1-1(285)	2023	213	287

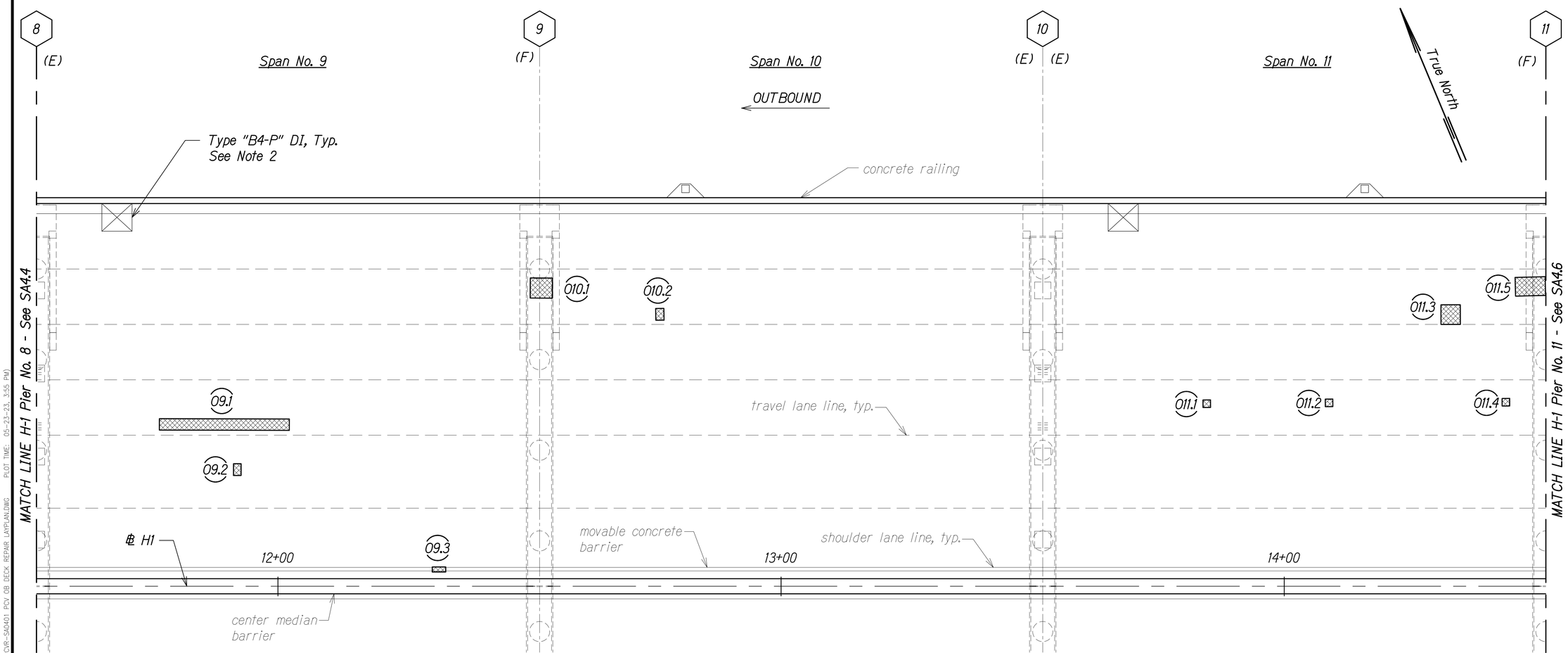

SPAN NO. 9 TO SPAN NO. 11

Scale: 1" = 10'-0"

LEGEND:

- # — Pier No.
- OX.# — Outbound Repair, See Schedules on SA5.1 to SA5.6
  - Defect No.
  - Span No.
  - Outbound
- Repair Area
- (E) Expansion Joint, See Note 1
- (F) Fixed Joint
- (H) Hinged Joint

NOTES:

1. All expansion joint compression seals shall be replaced. See SA10.1 to SA10.5.
2. Drain inlet grates shall be replaced and drain inlet frames shall be raised. See SA9.6 to SA9.8.

ERIC Y. MATSUMOTO
LICENSED PROFESSIONAL ENGINEER
NO. 10156-S
HAWAII, U.S.A.

THIS WORK WAS PREPARED BY ME OR UNDER MY SUPERVISION.

SIGNATURE — EXPIRATION DATE OF THE LICENSE 4-30-24

STATE OF HAWAII
DEPARTMENT OF TRANSPORTATION
HIGHWAYS DIVISION

PEARL CITY VIADUCT OB
REPAIR PLAN SPAN NO. 9 TO SPAN NO. 11

INTERSTATE ROUTE H-1 IMPROVEMENTS
Vicinity of Pearl City Viaduct to Waimalu Viaduct
Federal-Aid Project No. NH-H1-1(285)

Scale: As Noted — Date: May 2023

SHEET No. SA4.5 OF 23 SHEETS

ORIGINAL PLAN — SURVEY PLOTTED BY — DRAWN BY — TRACED BY — DESIGNED BY — QUANTITIES BY — CHECKED BY — DATE
NOTE BOOK No.

DRAWING NAME: Z:\OD ENGING\22-001.8 PEARL CITY VIADUCT REPAIRS\01 CAD\05-23-23 1GDPCT\PCVR-SA0401 PCV OB DECK REPAIR LAYPLAN.DWG PLOT TIME: 05-23-23, 3:55 PM

FED. ROAD DIST. NO.	STATE	FEDERAL AID PROJ. NO.	FISCAL YEAR	SHEET NO.	TOTAL SHEETS
HAWAII	HAW.	NH-H1-1(285)	2023	214	287

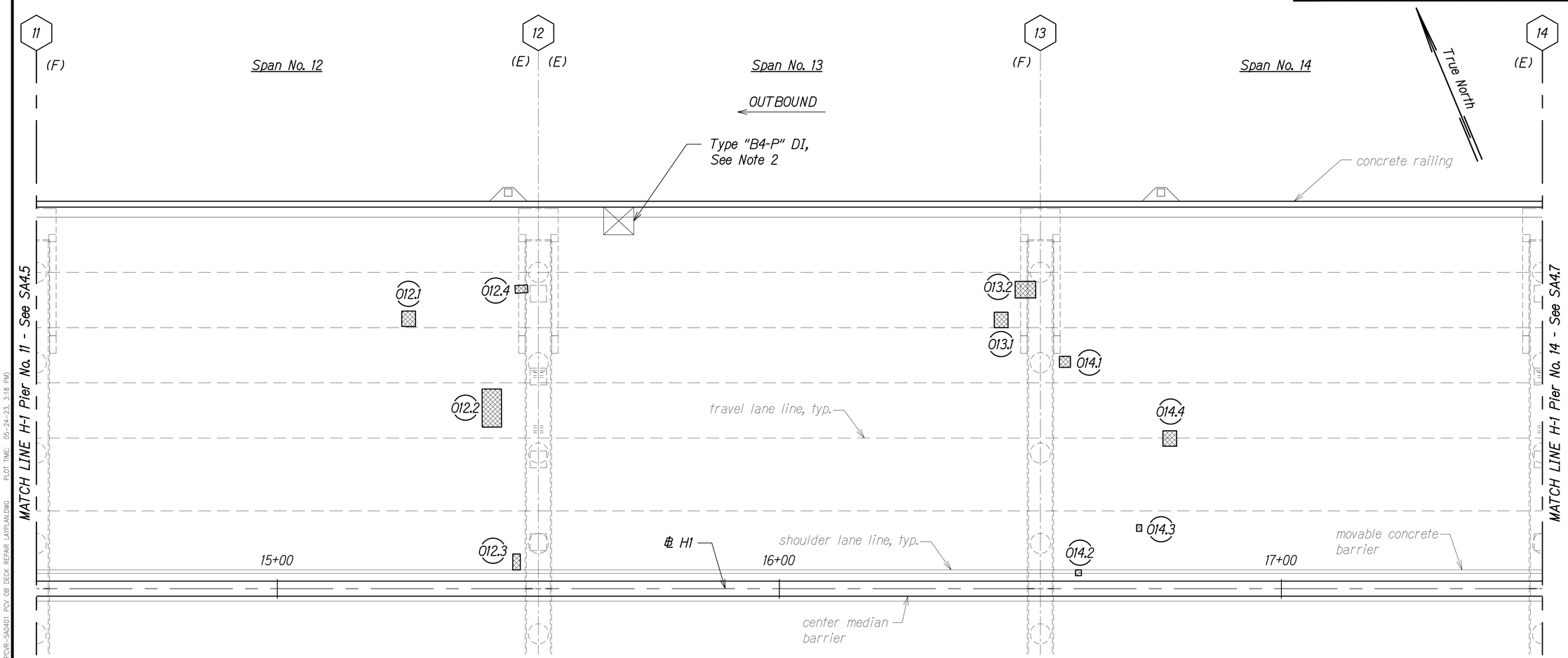

SPAN NO. 12 TO SPAN NO. 14

Scale: 1" = 10'-0"

LEGEND:

- # — Pier No.
- OX.# — Outbound Repair, See Schedules on SA5.1 to SA5.6
  - Defect No.
  - Span No.
  - Outbound
- Repair Area
- (E) Expansion Joint, See Note 1
- (F) Fixed Joint
- (H) Hinged Joint

NOTES:

1. All expansion joint compression seals shall be replaced. See SA10.1 to SA10.5.
2. Drain inlet grates shall be replaced and drain inlet frames shall be raised. See SA9.6 to SA9.8.

ERIC Y. MATSUMOTO
LICENSED PROFESSIONAL ENGINEER
NO. 10156-S
HAWAII, U.S.A.

THIS WORK WAS PREPARED BY ME OR UNDER MY SUPERVISION.

SIGNATURE — EXPIRATION DATE OF THE LICENSE 4-30-24

STATE OF HAWAII
DEPARTMENT OF TRANSPORTATION
HIGHWAYS DIVISION

PEARL CITY VIADUCT OB
REPAIR PLAN SPAN NO. 12 TO SPAN NO. 14

INTERSTATE ROUTE H-1 IMPROVEMENTS
Vicinity of Pearl City Viaduct to Waimalu Viaduct
Federal-Aid Project No. NH-H1-1(285)

Scale: As Noted — Date: May 2023

SHEET No. SA4.6 OF 23 SHEETS

ORIGINAL PLAN | SURVEY PLOTTED BY | DRAWN BY | TRACED BY | DESIGNED BY | QUANTITIES BY | CHECKED BY | DATE
NOTE BOOK No.

DRAWING NAME: Z:\00 ORDINCE\22-0018 PEARL CITY VIADUCT REPAIRS\01 CAD\05-25-23 100PCT\PCVR-SA0401 PCV OB DECK REPAIR LAYPLAN.DWG PLOT TIME: 05-24-23, 3:18 PM

FED. ROAD DIST. NO.	STATE	FEDERAL AID PROJ. NO.	FISCAL YEAR	SHEET NO.	TOTAL SHEETS
HAWAII	HAW.	NH-H1-1(285)	2023	215	287

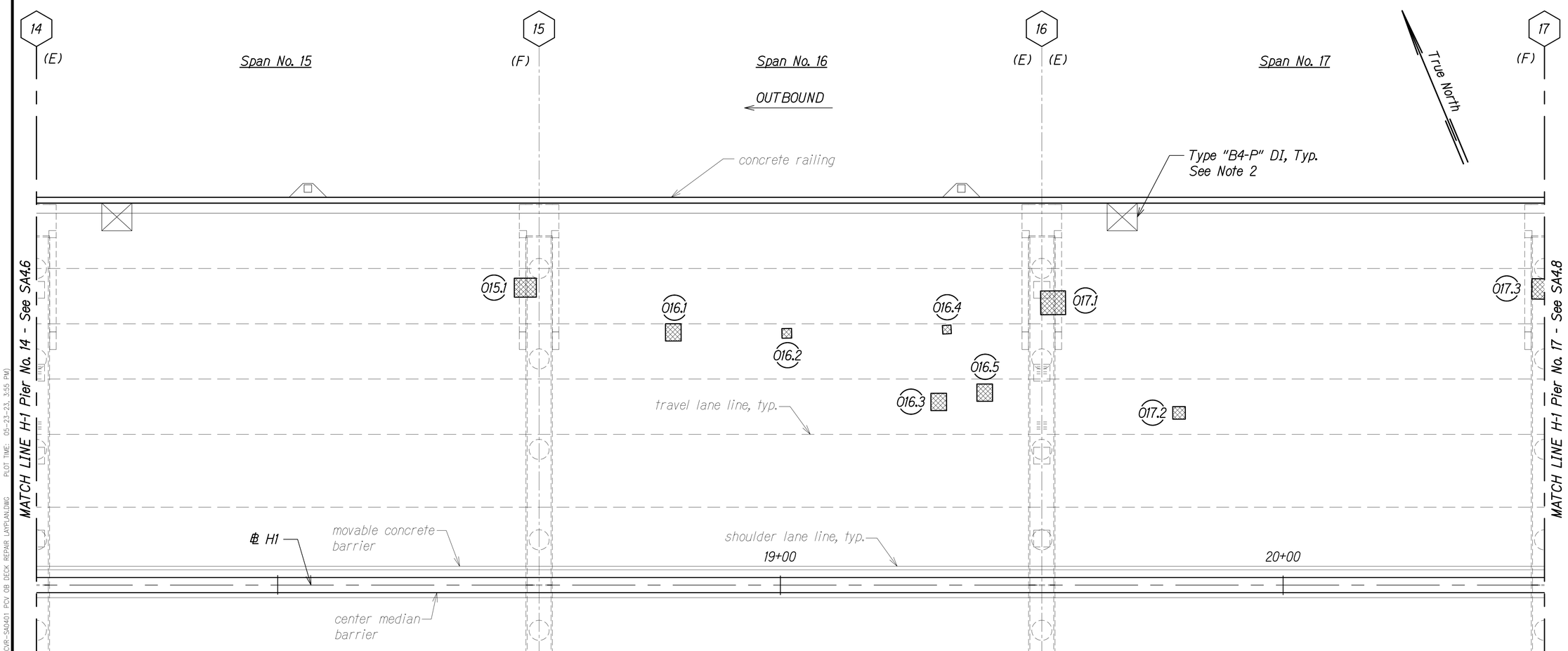

SPAN NO. 15 TO SPAN NO. 17

Scale: 1" = 10'-0"

LEGEND:

- # — Pier No.
- OX.# — Outbound Repair, See Schedules on SA5.1 to SA5.6
  - Defect No.
  - Span No.
  - Outbound
- Repair Area
- (E) Expansion Joint, See Note 1
- (F) Fixed Joint
- (H) Hinged Joint

NOTES:

1. All expansion joint compression seals shall be replaced. See SA10.1 to SA10.5.
2. Drain inlet grates shall be replaced and drain inlet frames shall be raised. See SA9.6 to SA9.8.

ORIGINAL PLAN	SURVEY PLOTTED BY	DATE
	DRAWN BY	
NOTE BOOK	TRACED BY	
	DESIGNED BY	
	QUANTITIES BY	
No.	CHECKED BY	

DRAWING NAME: Z:\OD ENGINEG\22-001.8 PEARL CITY VIADUCT REPAIRS\01 CAD\05-23-23 1GDPC\PCVR-SA0401 PCV OB DECK REPAIR LAYPLAN.DWG PLOT TIME: 05-23-23, 3:55 PM

ERIC Y. MATSUMOTO
LICENSED PROFESSIONAL ENGINEER
NO. 10156-S
HAWAII, U.S.A.

THIS WORK WAS PREPARED BY ME OR UNDER MY SUPERVISION.

SIGNATURE — EXPIRATION DATE OF THE LICENSE 4-30-24

STATE OF HAWAII
DEPARTMENT OF TRANSPORTATION
HIGHWAYS DIVISION

PEARL CITY VIADUCT OB
REPAIR PLAN SPAN NO. 15 TO SPAN NO. 17

INTERSTATE ROUTE H-1 IMPROVEMENTS
Vicinity of Pearl City Viaduct to Waimalu Viaduct
Federal-Aid Project No. NH-H1-1(285)

Scale: As Noted — Date: May 2023

SHEET No. SA4.7 OF 23 SHEETS

FED. ROAD DIST. NO.	STATE	FEDERAL AID PROJ. NO.	FISCAL YEAR	SHEET NO.	TOTAL SHEETS
HAWAII	HAW.	NH-H1-1(285)	2023	216	287

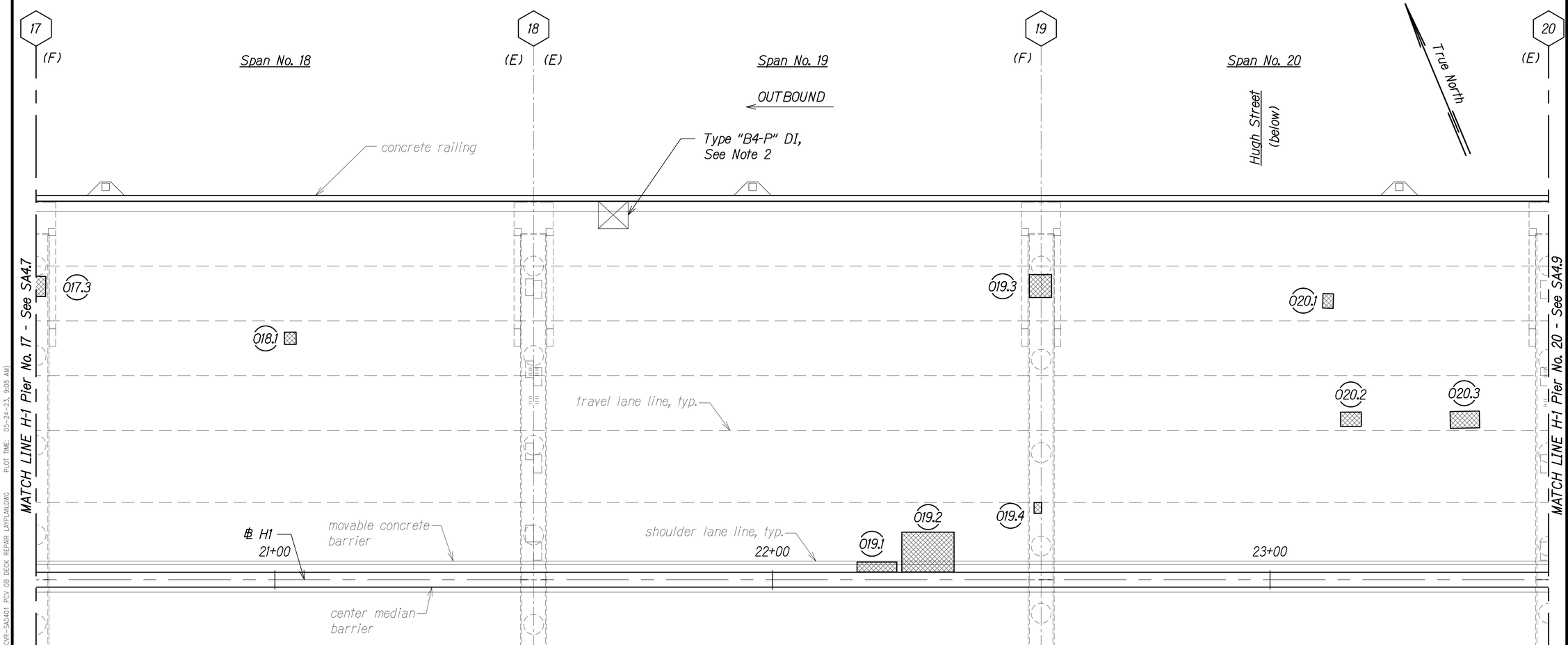

SPAN NO. 18 TO SPAN NO. 20

Scale: 1" = 10'-0"

LEGEND:

- # — Pier No.
- OX.# — Outbound Repair, See Schedules on SA5.1 to SA5.6
  - Defect No.
  - Span No.
  - Outbound
- Repair Area
- (E) Expansion Joint, See Note 1
- (F) Fixed Joint
- (H) Hinged Joint

NOTES:

1. All expansion joint compression seals shall be replaced. See SA10.1 to SA10.5.
2. Drain inlet grates shall be replaced and drain inlet frames shall be raised. See SA9.6 to SA9.8.

ERIC Y. MATSUMOTO
LICENSED PROFESSIONAL ENGINEER
NO. 10156-S
HAWAII, U.S.A.

THIS WORK WAS PREPARED BY ME OR UNDER MY SUPERVISION.

SIGNATURE — EXPIRATION DATE OF THE LICENSE 4-30-24

STATE OF HAWAII
DEPARTMENT OF TRANSPORTATION
HIGHWAYS DIVISION

PEARL CITY VIADUCT OB
REPAIR PLAN SPAN NO. 18 TO SPAN NO. 20

INTERSTATE ROUTE H-1 IMPROVEMENTS
Vicinity of Pearl City Viaduct to Waimalu Viaduct
Federal-Aid Project No. NH-H1-1(285)

Scale: As Noted — Date: May 2023

SHEET No. SA4.8 OF 23 SHEETS

ORIGINAL PLAN — SURVEY PLOTTED BY — DRAWN BY — TRACED BY — DESIGNED BY — QUANTITIES BY — CHECKED BY — DATE
NOTE BOOK No.

DRAWING NAME: Z:\OD ENGINEERING\22-001.8 PEARL CITY VIADUCT REPAIRS\01 CAD\05-23-23 1GDPCT\POYR-SA0401 POY OB DECK REPAIR LAYPLAN.DWG PLOT TIME: 05-24-23, 9:08 AM

FED. ROAD DIST. NO.	STATE	FEDERAL AID PROJ. NO.	FISCAL YEAR	SHEET NO.	TOTAL SHEETS
HAWAII	HAW.	NH-H1-1(285)	2023	217	287

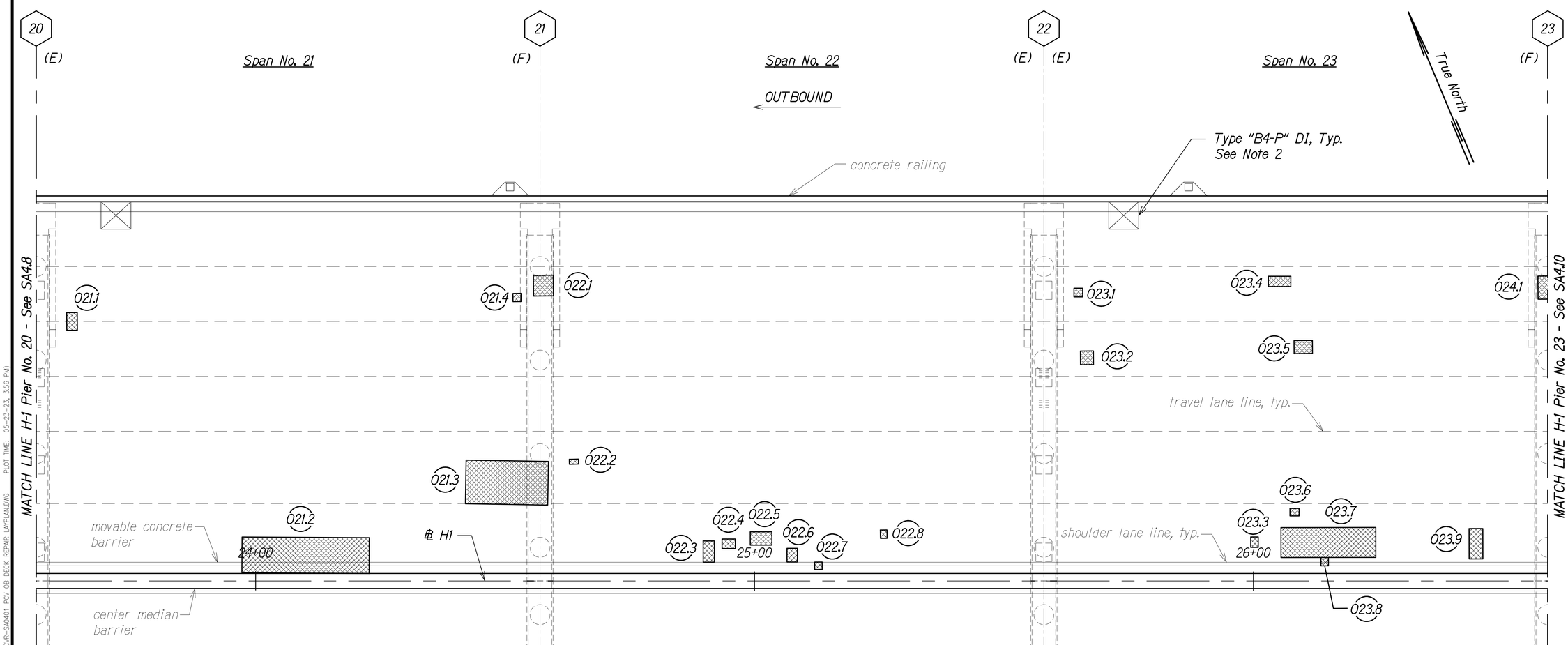

SPAN NO. 21 TO SPAN NO. 23

Scale: 1" = 10'-0"

LEGEND:

- # — Pier No.
- OX.# — Outbound Repair, See Schedules on SA5.1 to SA5.6
  - Defect No.
  - Span No.
  - Outbound
- Repair Area
- (E) Expansion Joint, See Note 1
- (F) Fixed Joint
- (H) Hinged Joint

NOTES:

1. All expansion joint compression seals shall be replaced. See SA10.1 to SA10.5.
2. Drain inlet grates shall be replaced and drain inlet frames shall be raised. See SA9.6 to SA9.8.

ERIC Y. MATSUMOTO LICENSED PROFESSIONAL ENGINEER NO. 10156-S HAWAII, U.S.A.

THIS WORK WAS PREPARED BY ME OR UNDER MY SUPERVISION.

SIGNATURE — EXPIRATION DATE OF THE LICENSE 4-30-24

STATE OF HAWAII
DEPARTMENT OF TRANSPORTATION
HIGHWAYS DIVISION

PEARL CITY VIADUCT OB
REPAIR PLAN SPAN NO. 21 TO SPAN NO. 23

INTERSTATE ROUTE H-1 IMPROVEMENTS
Vicinity of Pearl City Viaduct to Waimalu Viaduct
Federal-Aid Project No. NH-H1-1(285)

Scale: As Noted — Date: May 2023

SHEET No. SA4.9 OF 23 SHEETS

ORIGINAL PLAN | NOTE BOOK No. | SURVEY PLOTTED BY | DRAWN BY | TRACED BY | DESIGNED BY | QUANTITIES BY | CHECKED BY | DATE

DRAWING NAME: Z:\OD ONGOING\22-001.8 PEARL CITY VIADUCT REPAIRS\01 CAD\05-23-23 1GRPCT\PCVR-SA0401 PCV OB DECK REPAIR LAYPLAN.DWG PLOT TIME: 05-23-23, 3:56 PM

FED. ROAD DIST. NO.	STATE	FEDERAL AID PROJ. NO.	FISCAL YEAR	SHEET NO.	TOTAL SHEETS
HAWAII	HAW.	NH-H1-1(285)	2023	218	287

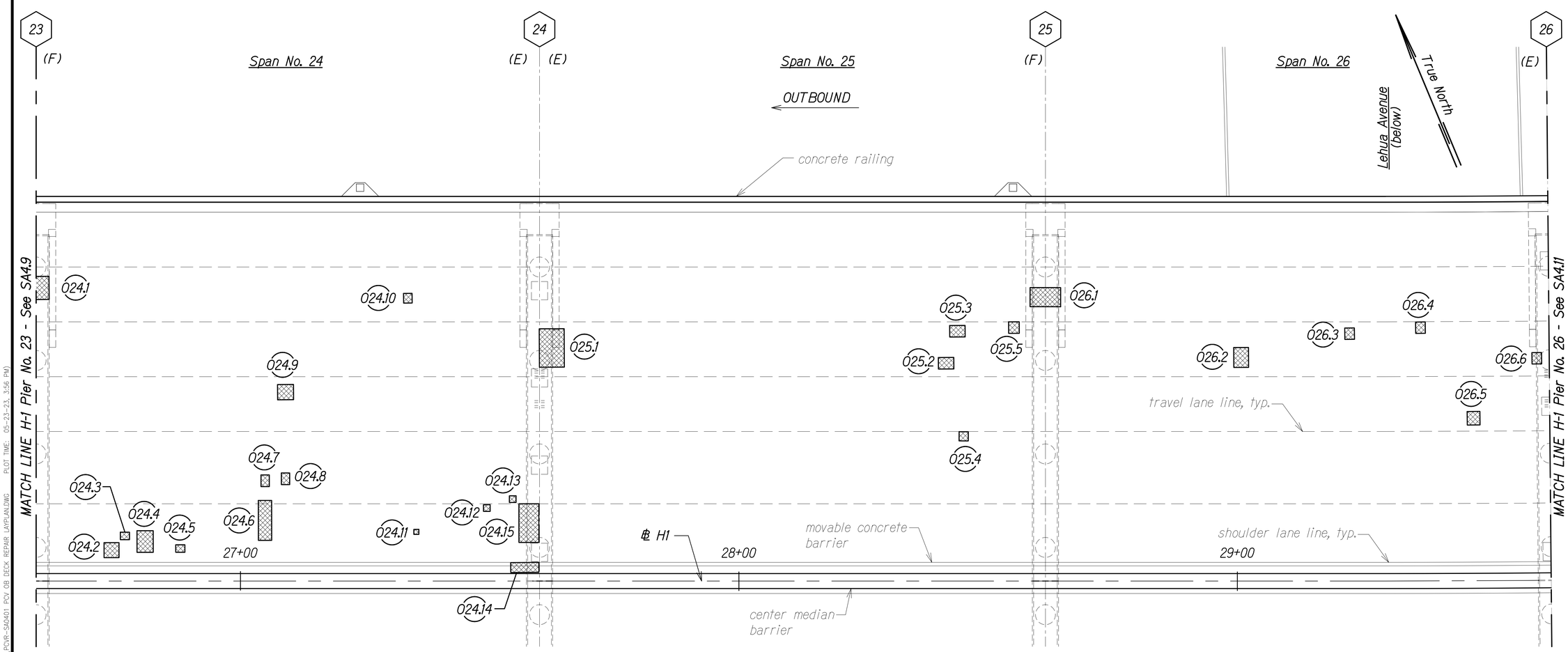

SPAN NO. 24 TO SPAN NO. 26

Scale: 1" = 10'-0"

LEGEND:

- # — Pier No.
- OX.# — Outbound Repair, See Schedules on SA5.1 to SA5.6
  - Defect No.
  - Span No.
  - Outbound
- Repair Area
- (E) Expansion Joint, See Note
- (F) Fixed Joint
- (H) Hinged Joint

NOTE:

All expansion joint compression seals shall be replaced. See SA10.1 to SA10.5.

ORIGINAL PLAN	SURVEY PLOTTED BY	DATE
	DRAWN BY	
NOTE BOOK	TRACED BY	
	DESIGNED BY	
No.	QUANTITIES BY	
	CHECKED BY	

ERIC Y. MATSUMOTO
LICENSED PROFESSIONAL ENGINEER
NO. 10156-S
HAWAII, U.S.A.

THIS WORK WAS PREPARED BY ME OR UNDER MY SUPERVISION.

SIGNATURE — EXPIRATION DATE OF THE LICENSE 4-30-24

STATE OF HAWAII
DEPARTMENT OF TRANSPORTATION
HIGHWAYS DIVISION

PEARL CITY VIADUCT OB
REPAIR PLAN SPAN NO. 24 TO SPAN NO. 26

INTERSTATE ROUTE H-1 IMPROVEMENTS
Vicinity of Pearl City Viaduct to Waimalu Viaduct
Federal-Aid Project No. NH-H1-1(285)

Scale: As Noted — Date: May 2023

SHEET No. SA4.10 OF 23 SHEETS

DRAWING NAME: Z:\OB ORIGINAL\22-001 8 PEARL CITY VIADUCT REPAIRS\01 CAD\05-23-23 10GPC\PCVR-SA0401 PCV OB DECK REPAIR LAYPLAN.DWG PLOT TIME: 05-23-23, 3:56 PM

FED. ROAD DIST. NO.	STATE	FEDERAL AID PROJ. NO.	FISCAL YEAR	SHEET NO.	TOTAL SHEETS
HAWAII	HAW.	NH-H1-1(285)	2023	219	287

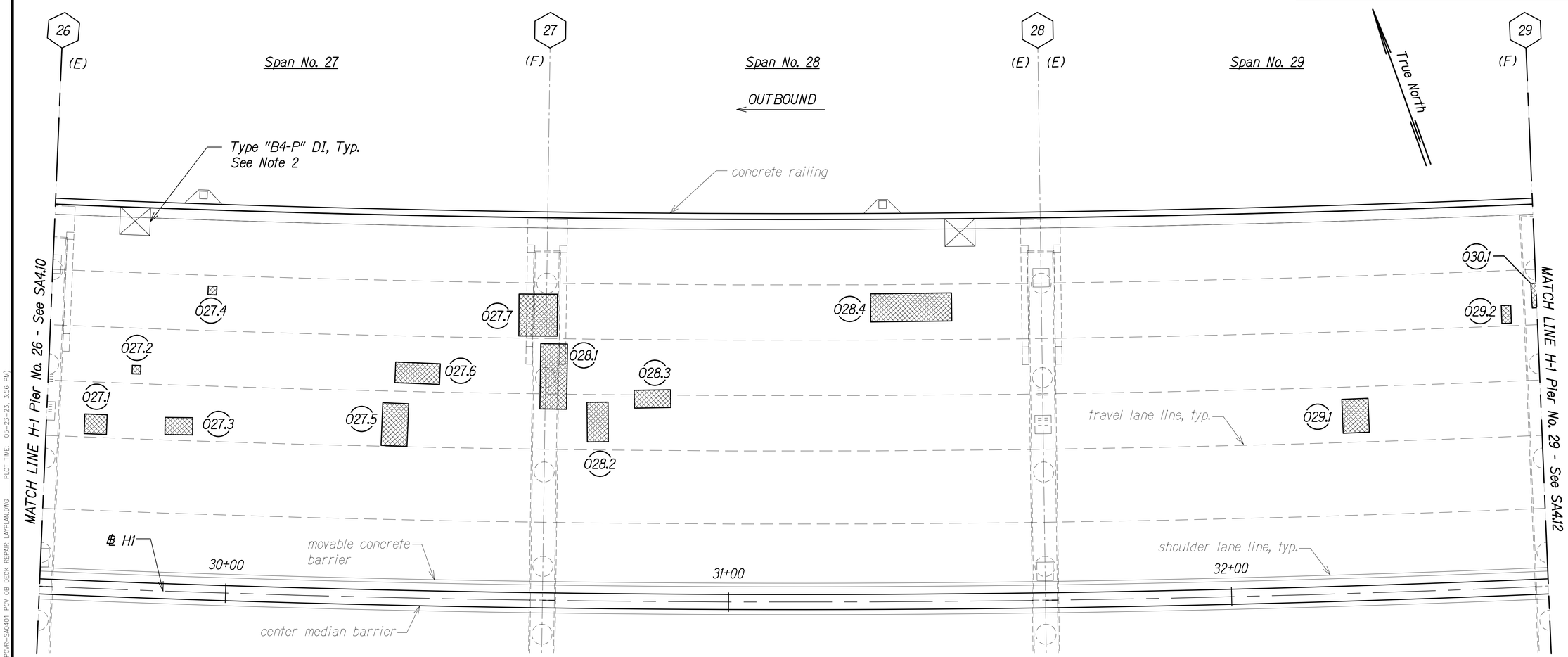

SPAN NO. 27 TO SPAN NO. 29

Scale: 1" = 10'-0"

LEGEND:

- # — Pier No.
- OX.# — Outbound Repair, See Schedules on SA5.1 to SA5.6
  - Defect No.
  - Span No.
  - Outbound
- Repair Area
- (E) Expansion Joint, See Note 1
- (F) Fixed Joint
- (H) Hinged Joint

NOTES:

1. All expansion joint compression seals shall be replaced. See SA10.1 to SA10.5.
2. Drain inlet grates shall be replaced and drain inlet frames shall be raised. See SA9.6 to SA9.8.

ERIC Y. MATSUMOTO
LICENSED PROFESSIONAL ENGINEER
NO. 10156-S
HAWAII, U.S.A.

THIS WORK WAS PREPARED BY ME OR UNDER MY SUPERVISION.

SIGNATURE — EXPIRATION DATE OF THE LICENSE 4-30-24

STATE OF HAWAII
DEPARTMENT OF TRANSPORTATION
HIGHWAYS DIVISION

PEARL CITY VIADUCT OB
REPAIR PLAN SPAN NO. 27 TO SPAN NO. 29

INTERSTATE ROUTE H-1 IMPROVEMENTS
Vicinity of Pearl City Viaduct to Waimalu Viaduct
Federal-Aid Project No. NH-H1-1(285)

Scale: As Noted — Date: May 2023

SHEET No. SA4.11 OF 23 SHEETS

ORIGINAL PLAN | SURVEY PLOTTED BY | DRAWN BY | TRACED BY | DESIGNED BY | QUANTITIES BY | CHECKED BY | DATE
NOTE BOOK No.

DRAWING NAME: Z:\OD ONGOING\22-0018 PEARL CITY VIADUCT REPAIRS\01 CAD\05-23-23 100PCT\PCVR-SA0401 PCV OB DECK REPAIR LAYPLAN.DWG PLOT TIME: 05-23-23, 3:56 PM

FED. ROAD DIST. NO.	STATE	FEDERAL AID PROJ. NO.	FISCAL YEAR	SHEET NO.	TOTAL SHEETS
HAWAII	HAW.	NH-H1-1(285)	2023	220	287

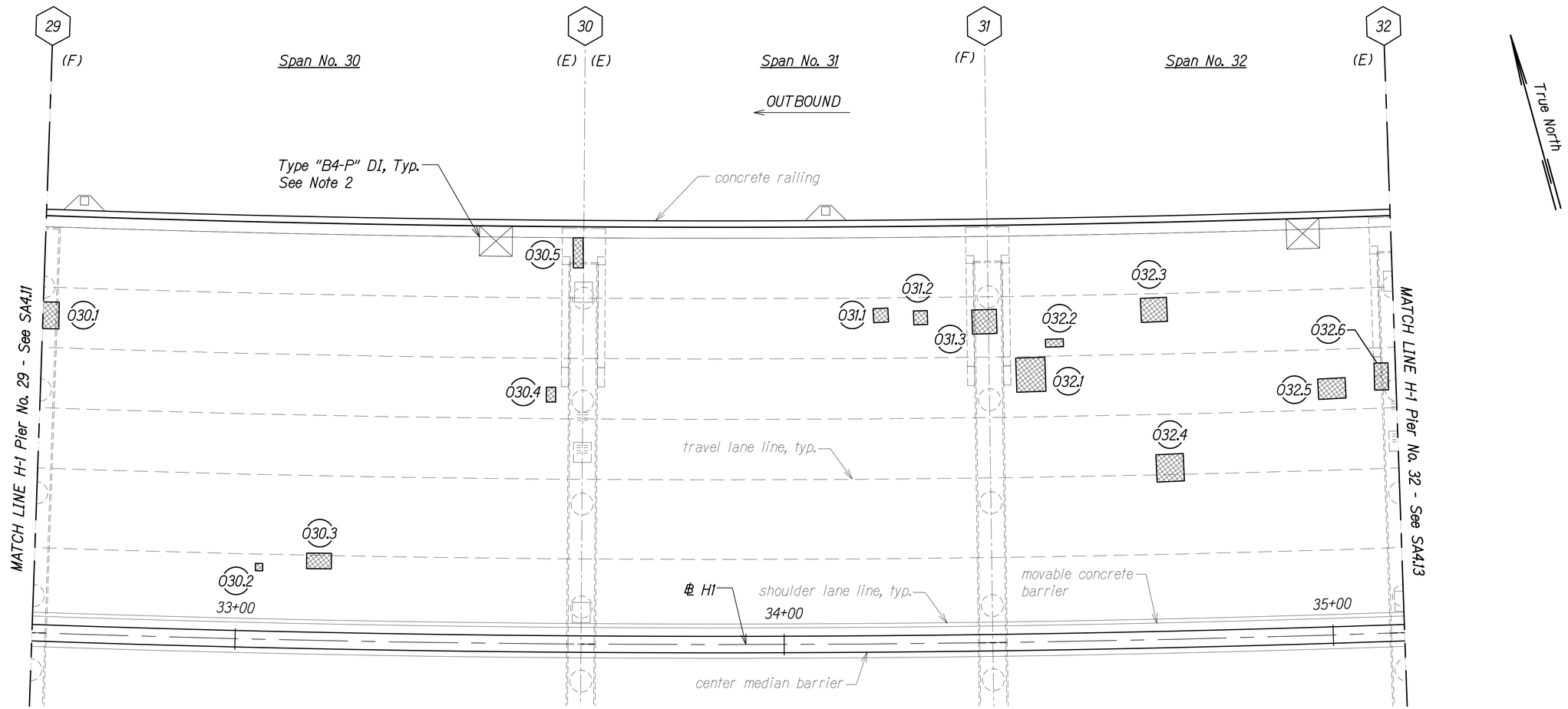

SPAN NO. 30 TO SPAN NO. 32

Scale: 1" = 10'-0"

LEGEND:

- # — Pier No.
- OX.# — Outbound Repair, See Schedules on SA5.1 to SA5.6
  - Defect No.
  - Span No.
  - Outbound
- Repair Area
- (E) Expansion Joint, See Note 1
- (F) Fixed Joint
- (H) Hinged Joint

NOTES:

1. All expansion joint compression seals shall be replaced. See SA10.1 to SA10.5.
2. Drain inlet grates shall be replaced and drain inlet frames shall be raised. See SA9.6 to SA9.8.

ERIC Y. MATSUMOTO
LICENSED PROFESSIONAL ENGINEER
NO. 10156-S
HAWAII, U.S.A.

THIS WORK WAS PREPARED BY ME OR UNDER MY SUPERVISION.

SIGNATURE — EXPIRATION DATE OF THE LICENSE 4-30-24

STATE OF HAWAII
DEPARTMENT OF TRANSPORTATION
HIGHWAYS DIVISION

PEARL CITY VIADUCT OB
REPAIR PLAN SPAN NO. 30 TO SPAN NO. 32

INTERSTATE ROUTE H-1 IMPROVEMENTS
Vicinity of Pearl City Viaduct to Waimalu Viaduct
Federal-Aid Project No. NH-H1-1(285)

Scale: As Noted — Date: May 2023

SHEET No. SA4.12 OF 23 SHEETS

ORIGINAL PLAN | SURVEY PLOTTED BY | DRAWN BY | NOTE BOOK | TRACED BY | DESIGNED BY | QUANTITIES BY | CHECKED BY | No. | DATE

DRAWING NAME: Z:\00 ORIGINCV\22-0018 PEARL CITY VIADUCT REPAIRS\01 CAD\05-23-23 10PRCY\PCVR-SA0401 PCV OB DECK REPAIR LAYPLAN.DWG PLOT TIME: 05-23-23 3:57 PM

FED. ROAD DIST. NO.	STATE	FEDERAL AID PROJ. NO.	FISCAL YEAR	SHEET NO.	TOTAL SHEETS
HAWAII	HAW.	NH-HI-1(285)	2023	221	287

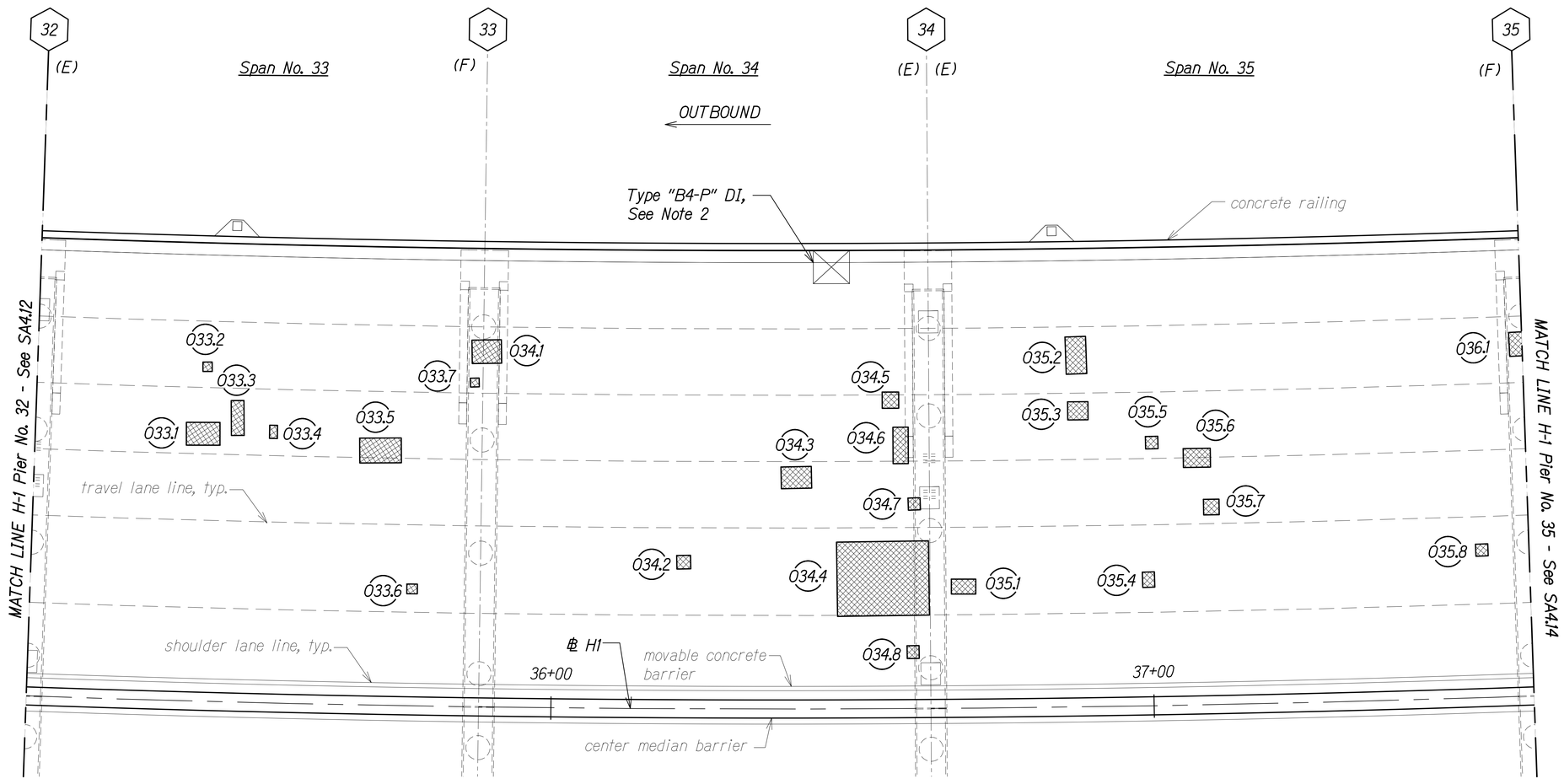

SPAN NO. 33 TO SPAN NO. 35

Scale: 1" = 10'-0"

LEGEND:

- # — Pier No.
- OX.# — Outbound Repair, See Schedules on SA5.1 to SA5.6
  - Defect No.
  - Span No.
  - Outbound
- Repair Area
- (E) Expansion Joint, See Note 1
- (F) Fixed Joint
- (H) Hinged Joint

NOTES:

1. All expansion joint compression seals shall be replaced. See SA10.1 to SA10.5.
2. Drain inlet grates shall be replaced and drain inlet frames shall be raised. See SA9.6 to SA9.8.

ERIC Y. MATSUMOTO
LICENSED PROFESSIONAL ENGINEER
NO. 10156-S
HAWAII, U.S.A.

THIS WORK WAS PREPARED BY ME OR UNDER MY SUPERVISION.

SIGNATURE — EXPIRATION DATE OF THE LICENSE 4-30-24

STATE OF HAWAII
DEPARTMENT OF TRANSPORTATION
HIGHWAYS DIVISION

PEARL CITY VIADUCT OB
REPAIR PLAN SPAN NO. 33 TO SPAN NO. 35

INTERSTATE ROUTE H-1 IMPROVEMENTS
Vicinity of Pearl City Viaduct to Waimalu Viaduct
Federal-Aid Project No. NH-HI-1(285)

Scale: As Noted — Date: May 2023

SHEET No. SA4.13 OF 23 SHEETS

221

ORIGINAL PLAN — SURVEY PLOTTED BY — DRAWN BY — TRACED BY — DESIGNED BY — QUANTITIES BY — CHECKED BY — DATE
NOTE BOOK No.

DRAWING NAME: Z:\OD ONGOING\22-001.8 PEARL CITY VIADUCT REPAIRS\01 CAD\05-23-23 100PCT\POVR-SA0401 POV OB DECK REPAIR LAYPLAN.DWG PLOT TIME: 05-23-23, 3:57 PM

FED. ROAD DIST. NO.	STATE	FEDERAL AID PROJ. NO.	FISCAL YEAR	SHEET NO.	TOTAL SHEETS
HAWAII	HAW.	NH-H1-1(285)	2023	222	287

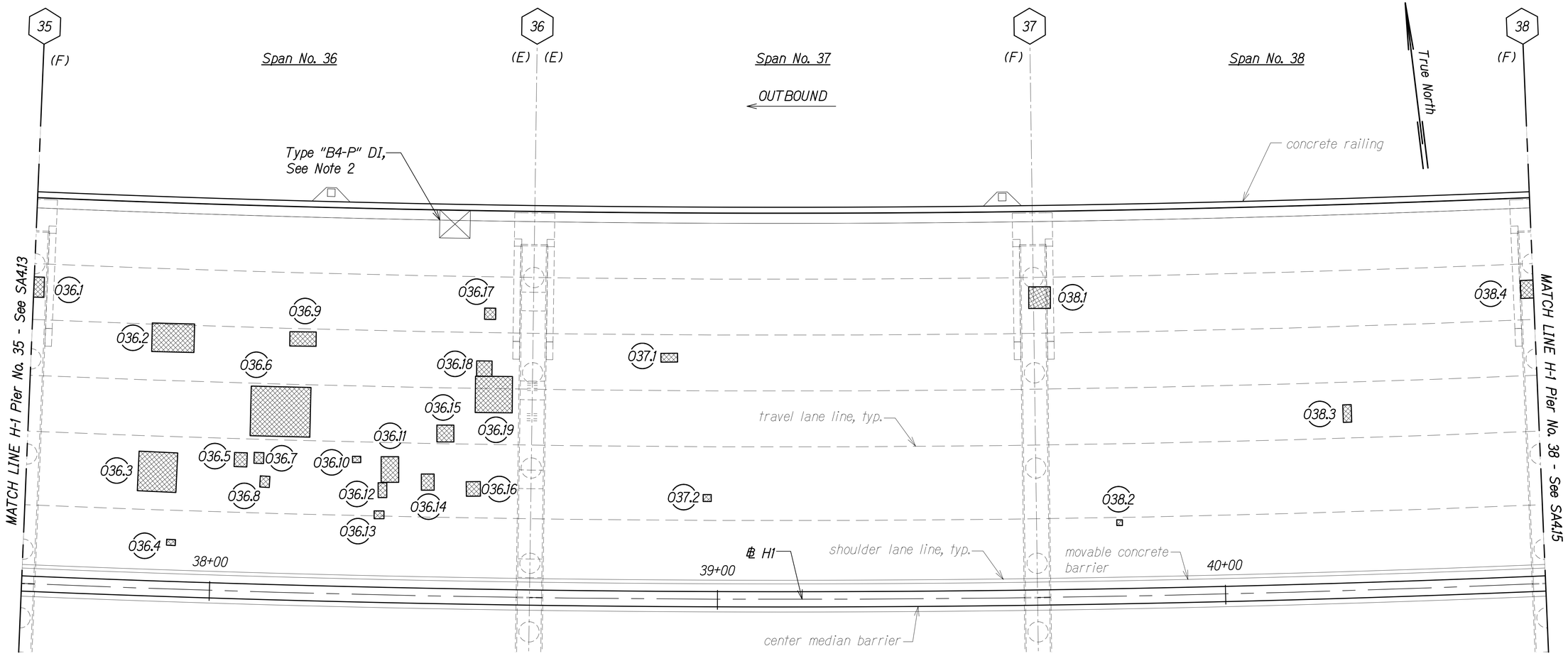

SPAN NO. 36 TO SPAN NO. 38

Scale: 1" = 10'-0"

LEGEND:

- # — Pier No.
- OX.# — Outbound Repair, See Schedules on SA5.1 to SA5.6
  - Defect No.
  - Span No.
  - Outbound
- Repair Area
- (E) Expansion Joint, See Note 1
- (F) Fixed Joint
- (H) Hinged Joint

NOTES:

1. All expansion joint compression seals shall be replaced. See SA10.1 to SA10.5.
2. Drain inlet grates shall be replaced and drain inlet frames shall be raised. See SA9.6 to SA9.8.

ERIC Y. MATSUMOTO
LICENSED PROFESSIONAL ENGINEER
NO. 10156-S
HAWAII, U.S.A.

THIS WORK WAS PREPARED BY ME OR UNDER MY SUPERVISION.

SIGNATURE — EXPIRATION DATE OF THE LICENSE 4-30-24

STATE OF HAWAII
DEPARTMENT OF TRANSPORTATION
HIGHWAYS DIVISION

PEARL CITY VIADUCT OB
REPAIR PLAN SPAN NO. 36 TO SPAN NO. 38
INTERSTATE ROUTE H-1 IMPROVEMENTS
Vicinity of Pearl City Viaduct to Waimalu Viaduct
Federal-Aid Project No. NH-H1-1(285)

Scale: As Noted — Date: May 2023

SHEET No. SA4.14 OF 23 SHEETS

ORIGINAL PLAN — SURVEY PLOTTED BY / DRAWN BY / TRACED BY / DESIGNED BY / QUANTITIES BY / CHECKED BY — DATE
NOTE BOOK No.

DRAWING NAME: Z:\OD ONGOING\22-0013 PEARL CITY VIADUCT REPAIRS\01 CAD\05-23-23 100PCT\POR-SA0401 POV OB DECK REPAIR LAYPLAN.DWG PLOT TIME: 05-23-23, 3:57 PM

FED. ROAD DIST. NO.	STATE	FEDERAL AID PROJ. NO.	FISCAL YEAR	SHEET NO.	TOTAL SHEETS
HAWAII	HAW.	NH-H1-1(285)	2023	223	287

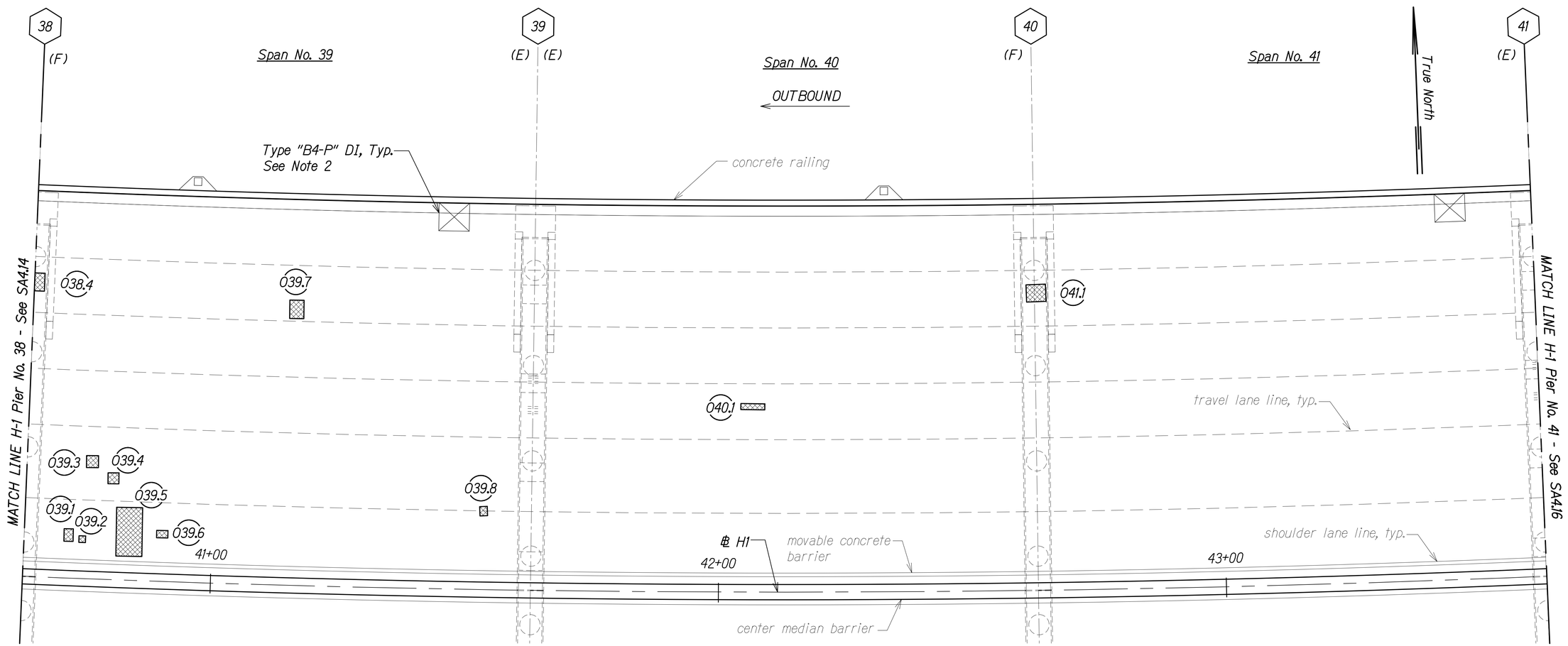

SPAN NO. 39 TO SPAN NO. 41

Scale: 1" = 10'-0"

LEGEND:

- # — Pier No.
- OX.# — Outbound Repair, See Schedules on SA5.1 to SA5.6
  - Defect No.
  - Span No.
  - Outbound
- Repair Area
- (E) Expansion Joint, See Note 1
- (F) Fixed Joint
- (H) Hinged Joint

NOTES:

1. All expansion joint compression seals shall be replaced. See SA10.1 to SA10.5.
2. Drain inlet grates shall be replaced and drain inlet frames shall be raised. See SA9.6 to SA9.8.

ERIC Y. MATSUMOTO
LICENSED PROFESSIONAL ENGINEER
NO. 10156-S
HAWAII, U.S.A.

THIS WORK WAS PREPARED BY ME OR UNDER MY SUPERVISION.

SIGNATURE — EXPIRATION DATE OF THE LICENSE 4-30-24

STATE OF HAWAII
DEPARTMENT OF TRANSPORTATION
HIGHWAYS DIVISION

PEARL CITY VIADUCT OB
REPAIR PLAN SPAN NO. 39 TO SPAN NO. 41

INTERSTATE ROUTE H-1 IMPROVEMENTS
Vicinity of Pearl City Viaduct to Waimalu Viaduct
Federal-Aid Project No. NH-H1-1(285)

Scale: As Noted — Date: May 2023

SHEET No. SA4.15 OF 23 SHEETS

ORIGINAL PLAN — SURVEY PLOTTED BY / DRAWN BY / TRACED BY / DESIGNED BY / QUANTITIES BY / CHECKED BY / DATE
NOTE BOOK No.

DRAWING NAME: Z:\OD ONGOING\22-0013 PEARL CITY VIADUCT REPAIRS\01 CAD\05-23-23 100PCT\POR-SA0401 POV OB DECK REPAIR LAYPLAN.DWG PLOT TIME: 05-23-23, 3:57 PM

FED. ROAD DIST. NO.	STATE	FEDERAL AID PROJ. NO.	FISCAL YEAR	SHEET NO.	TOTAL SHEETS
HAWAII	HAW.	NH-H1-1(285)	2023	224	287

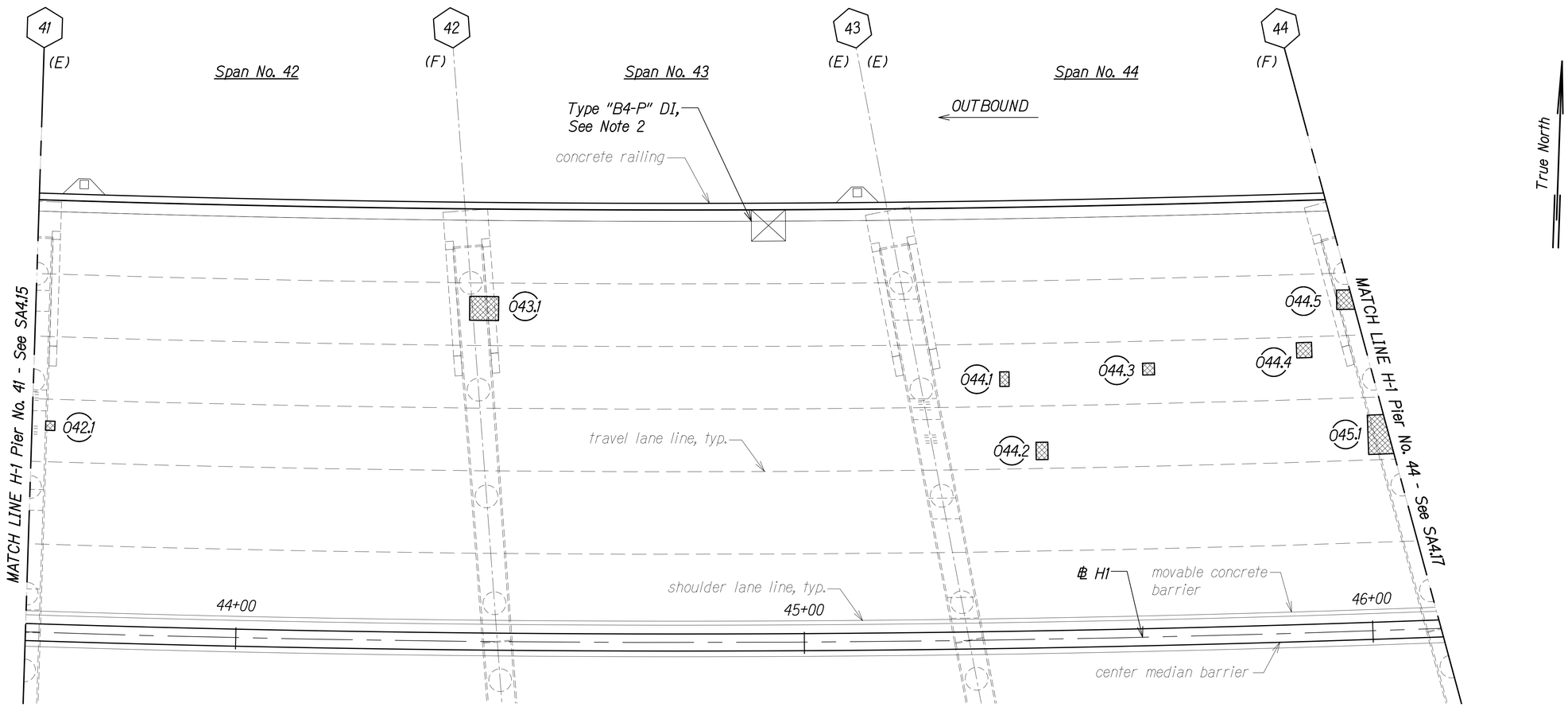

SPAN NO. 42 TO SPAN NO. 44

Scale: 1" = 10'-0"

LEGEND:

- # — Pier No.
- OX.# — Outbound Repair, See Schedules on SA5.1 to SA5.6
  - Defect No.
  - Span No.
  - Outbound
- Repair Area
- (E) Expansion Joint, See Note 1
- (F) Fixed Joint
- (H) Hinged Joint

NOTES:

1. All expansion joint compression seals shall be replaced. See SA10.1 to SA10.5.
2. Drain inlet grates shall be replaced and drain inlet frames shall be raised. See SA9.6 to SA9.8.

ERIC Y. MATSUMOTO
LICENSED PROFESSIONAL ENGINEER
NO. 10156-S
HAWAII, U.S.A.

THIS WORK WAS PREPARED BY ME OR UNDER MY SUPERVISION.

SIGNATURE — EXPIRATION DATE OF THE LICENSE 4-30-24

STATE OF HAWAII
DEPARTMENT OF TRANSPORTATION
HIGHWAYS DIVISION

PEARL CITY VIADUCT OB
REPAIR PLAN SPAN NO. 42 TO SPAN NO. 44

INTERSTATE ROUTE H-1 IMPROVEMENTS
Vicinity of Pearl City Viaduct to Waimalu Viaduct
Federal-Aid Project No. NH-H1-1(285)

Scale: As Noted — Date: May 2023

SHEET No. SA4.16 OF 23 SHEETS

224

ORIGINAL PLAN — SURVEY PLOTTED BY — DRAWN BY — TRACED BY — DESIGNED BY — QUANTITIES BY — CHECKED BY — DATE
NOTE BOOK No.

DRAWING NAME: Z:\OD ENGING\22-001.8 PEARL CITY VIADUCT REPAIRS\01 CAD\05-23-23 1GDPCT\POYR-SA0401 POY OB DECK REPAIR LAYPLAN.DWG PLOT TIME: 05-23-23, 3:57 PM

FED. ROAD DIST. NO.	STATE	FEDERAL AID PROJ. NO.	FISCAL YEAR	SHEET NO.	TOTAL SHEETS
HAWAII	HAW.	NH-HI-1(285)	2023	225	287

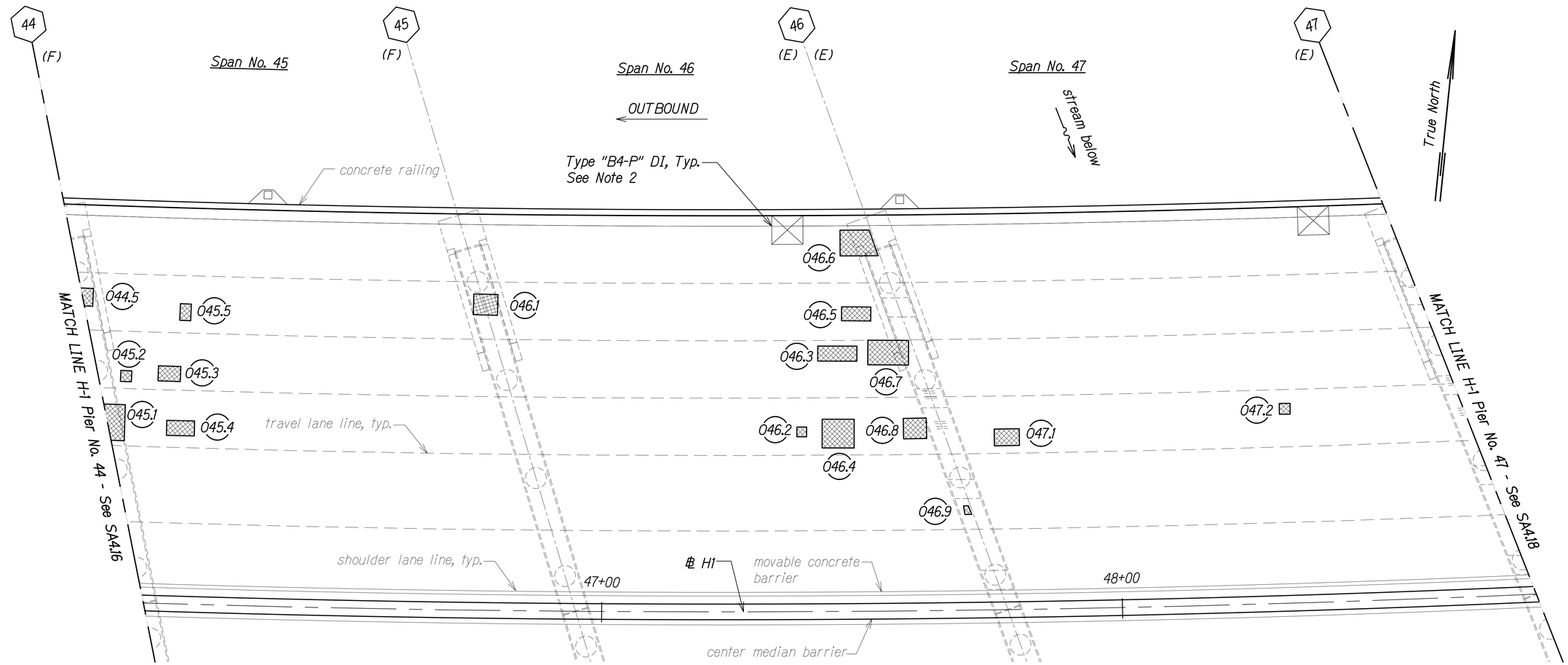

SPAN NO. 45 TO SPAN NO. 47

Scale: 1" = 10'-0"

LEGEND:

- # — Pier No.
- OX.# — Outbound Repair, See Schedules on SA5.1 to SA5.6
  - Defect No.
  - Span No.
  - Outbound
- Repair Area
- (E) Expansion Joint, See Note 1
- (F) Fixed Joint
- (H) Hinged Joint

NOTES:

1. All expansion joint compression seals shall be replaced. See SA10.1 to SA10.5.
2. Drain inlet grates shall be replaced and drain inlet frames shall be raised. See SA9.6 to SA9.8.

ERIC Y. MATSUMOTO
LICENSED PROFESSIONAL ENGINEER
NO. 10156-S
HAWAII, U.S.A.

THIS WORK WAS PREPARED BY ME OR UNDER MY SUPERVISION.

SIGNATURE — EXPIRATION DATE OF THE LICENSE 4-30-24

STATE OF HAWAII
DEPARTMENT OF TRANSPORTATION
HIGHWAYS DIVISION

PEARL CITY VIADUCT OB

REPAIR PLAN SPAN NO. 45 TO SPAN NO. 47

INTERSTATE ROUTE H-1 IMPROVEMENTS
Vicinity of Pearl City Viaduct to Waimalu Viaduct
Federal-Aid Project No. NH-HI-1(285)

Scale: As Noted — Date: May 2023

SHEET No. SA4.17 OF 23 SHEETS

ORIGINAL PLAN	SURVEY PLOTTED BY	DATE
	DRAWN BY	"
NOTE BOOK	TRACED BY	"
	DESIGNED BY	"
No.	QUANTITIES BY	"
	CHECKED BY	"

DRAWING NAME: Z:\OD ONGOING\22-0018 PEARL CITY VIADUCT REPAIRS\01 CAD\05-23-23 100PCT\PCVR-SA0401 PCV OB DECK REPAIR LAYPLAN.DWG PLOT TIME: 05-23-23, 3:58 PM

FED. ROAD DIST. NO.	STATE	FEDERAL AID PROJ. NO.	FISCAL YEAR	SHEET NO.	TOTAL SHEETS
HAWAII	HAW.	NH-H1-1(285)	2023	226	287

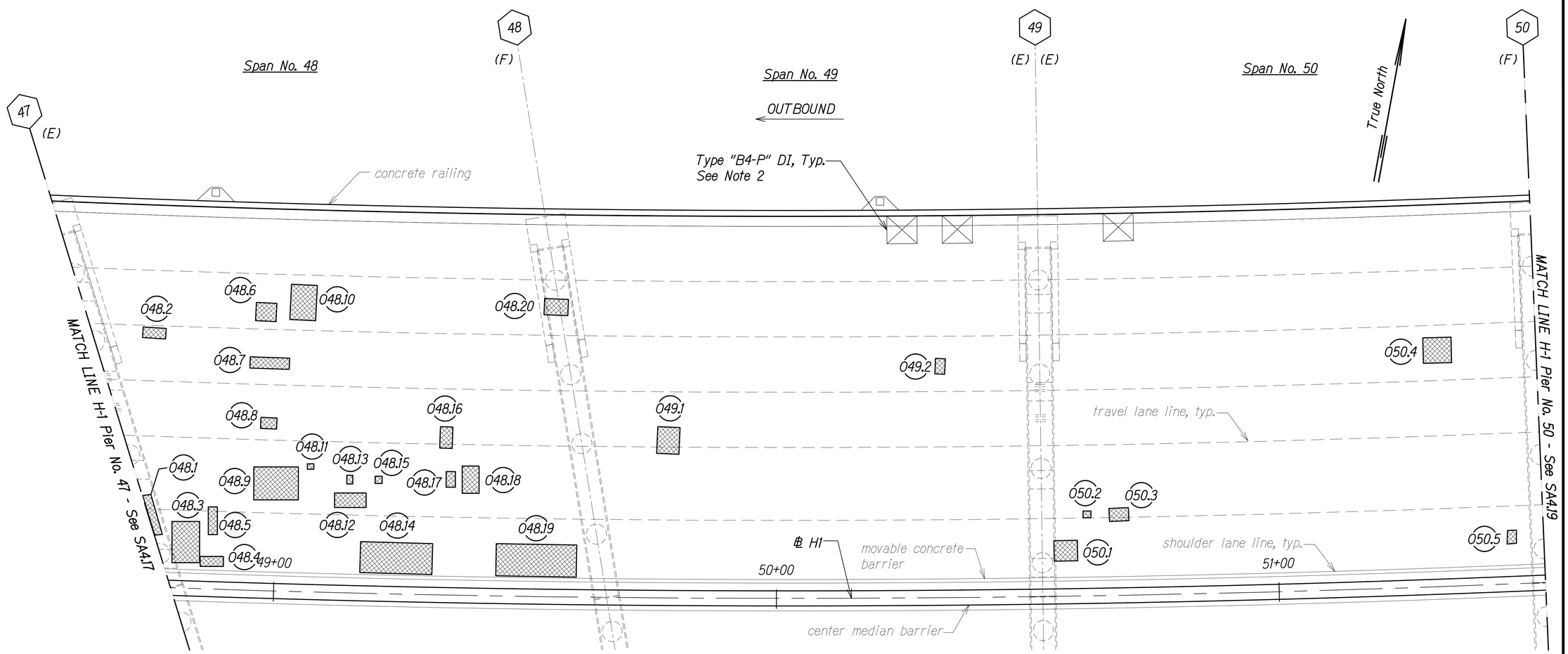

SPAN NO. 48 TO SPAN NO. 50

Scale: 1" = 10'-0"

LEGEND:

- # — Pier No.
- OX.# — Outbound Repair, See Schedules on SA5.1 to SA5.6
  - Defect No.
  - Span No.
  - Outbound
- Repair Area
- (E) Expansion Joint, See Note 1
- (F) Fixed Joint
- (H) Hinged Joint

NOTES:

1. All expansion joint compression seals shall be replaced. See SA10.1 to SA10.5.
2. Drain inlet grates shall be replaced and drain inlet frames shall be raised. See SA9.6 to SA9.8.

ORIGINAL PLAN	SURVEY PLOTTED BY	DATE
	DRAWN BY	
NOTE BOOK	TRACED BY	
	DESIGNED BY	
No.	QUANTITIES BY	
	CHECKED BY	

ERIC Y. MATSUMOTO
LICENSED PROFESSIONAL ENGINEER
NO. 10156-S
HAWAII, U.S.A.

THIS WORK WAS PREPARED BY ME OR UNDER MY SUPERVISION.

SIGNATURE — EXPIRATION DATE OF THE LICENSE 4-30-24

STATE OF HAWAII
DEPARTMENT OF TRANSPORTATION
HIGHWAYS DIVISION

PEARL CITY VIADUCT OB
REPAIR PLAN SPAN NO. 48 TO SPAN NO. 50

INTERSTATE ROUTE H-1 IMPROVEMENTS
Vicinity of Pearl City Viaduct to Waimalu Viaduct
Federal-Aid Project No. NH-H1-1(285)

Scale: As Noted — Date: May 2023

SHEET No. SA4.18 OF 23 SHEETS

DRAWING NAME: Z:\OD ONGOING\22-001.8 PEARL CITY VIADUCT REPAIRS\01 CAD\05-23-23 1\OPCT\PCVR-SA0401 PCV OB DECK REPAIR LAYPLAN.DWG PLOT TIME: 05-23-23, 3:58 PM

FED. ROAD DIST. NO.	STATE	FEDERAL AID PROJ. NO.	FISCAL YEAR	SHEET NO.	TOTAL SHEETS
HAWAII	HAW.	NH-H1-1(285)	2023	227	287

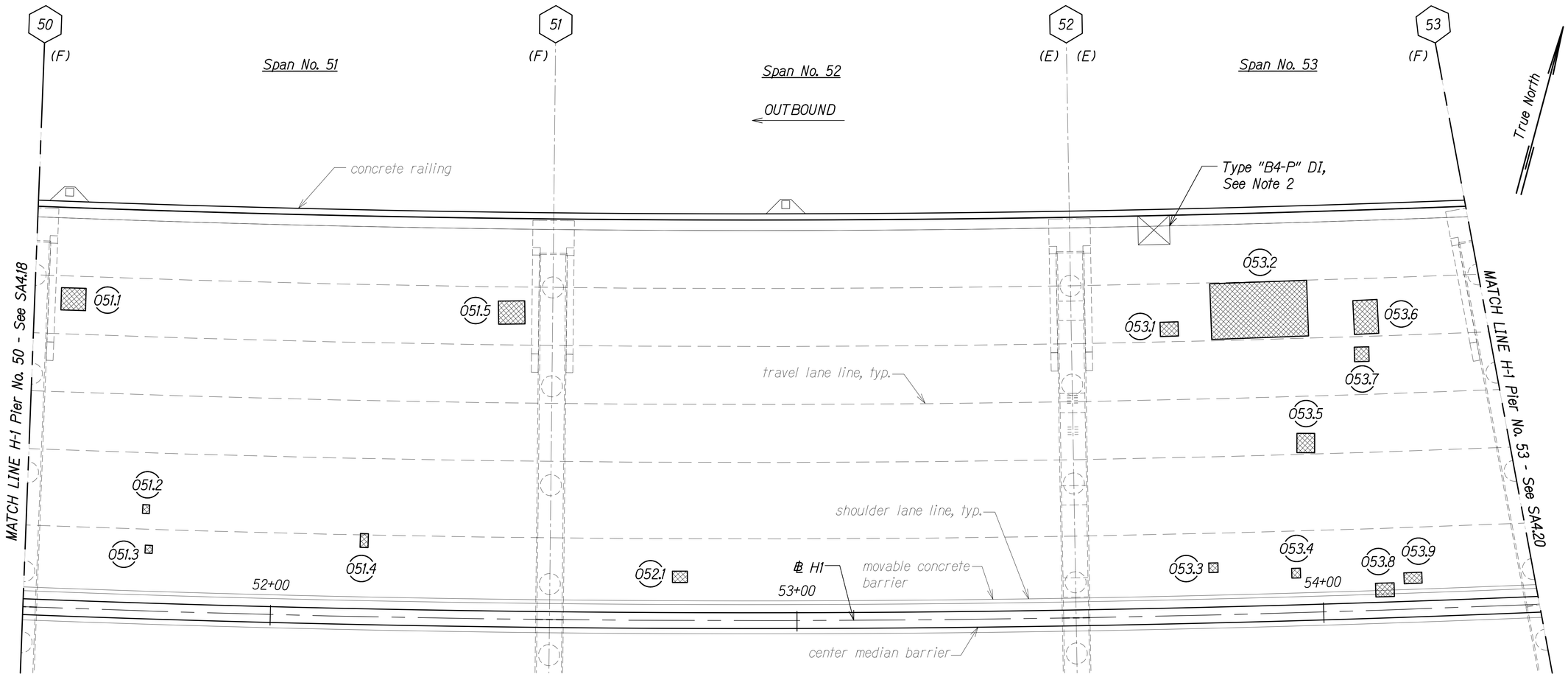

SPAN NO. 51 TO SPAN NO. 53

Scale: 1" = 10'-0"

LEGEND:

- # — Pier No.
- OX.# — Outbound Repair, See Schedules on SA5.1 to SA5.6
  - Defect No.
  - Span No.
  - Outbound
- Repair Area
- (E) Expansion Joint, See Note 1
- (F) Fixed Joint
- (H) Hinged Joint

NOTES:

1. All expansion joint compression seals shall be replaced. See SA10.1 to SA10.5.
2. Drain inlet grates shall be replaced and drain inlet frames shall be raised. See SA9.6 to SA9.8.

ERIC Y. MATSUMOTO
LICENSED PROFESSIONAL ENGINEER
NO. 10156-S
HAWAII, U.S.A.

THIS WORK WAS PREPARED BY ME OR UNDER MY SUPERVISION.

SIGNATURE — EXPIRATION DATE OF THE LICENSE 4-30-24

STATE OF HAWAII
DEPARTMENT OF TRANSPORTATION
HIGHWAYS DIVISION

PEARL CITY VIADUCT OB
REPAIR PLAN SPAN NO. 51 TO SPAN NO. 53

INTERSTATE ROUTE H-1 IMPROVEMENTS
Vicinity of Pearl City Viaduct to Waimalu Viaduct
Federal-Aid Project No. NH-H1-1(285)

Scale: As Noted — Date: May 2023

SHEET No. SA4.19 OF 23 SHEETS

ORIGINAL PLAN — SURVEY PLOTTED BY — DRAWN BY — TRACED BY — DESIGNED BY — QUANTITIES BY — CHECKED BY — DATE
NOTE BOOK No.

DRAWING NAME: Z:\OB ORIGINAL\22-001 8 PEARL CITY VIADUCT REPAIRS\01 CAD\05-23-23 1GRPC\PCVR-SA0401 PCV OB DECK REPAIR LAYPLAN.DWG PLOT TIME: 05-23-23, 3:58 PM

FED. ROAD DIST. NO.	STATE	FEDERAL AID PROJ. NO.	FISCAL YEAR	SHEET NO.	TOTAL SHEETS
HAWAII	HAW.	NH-HI-1(285)	2023	228	287

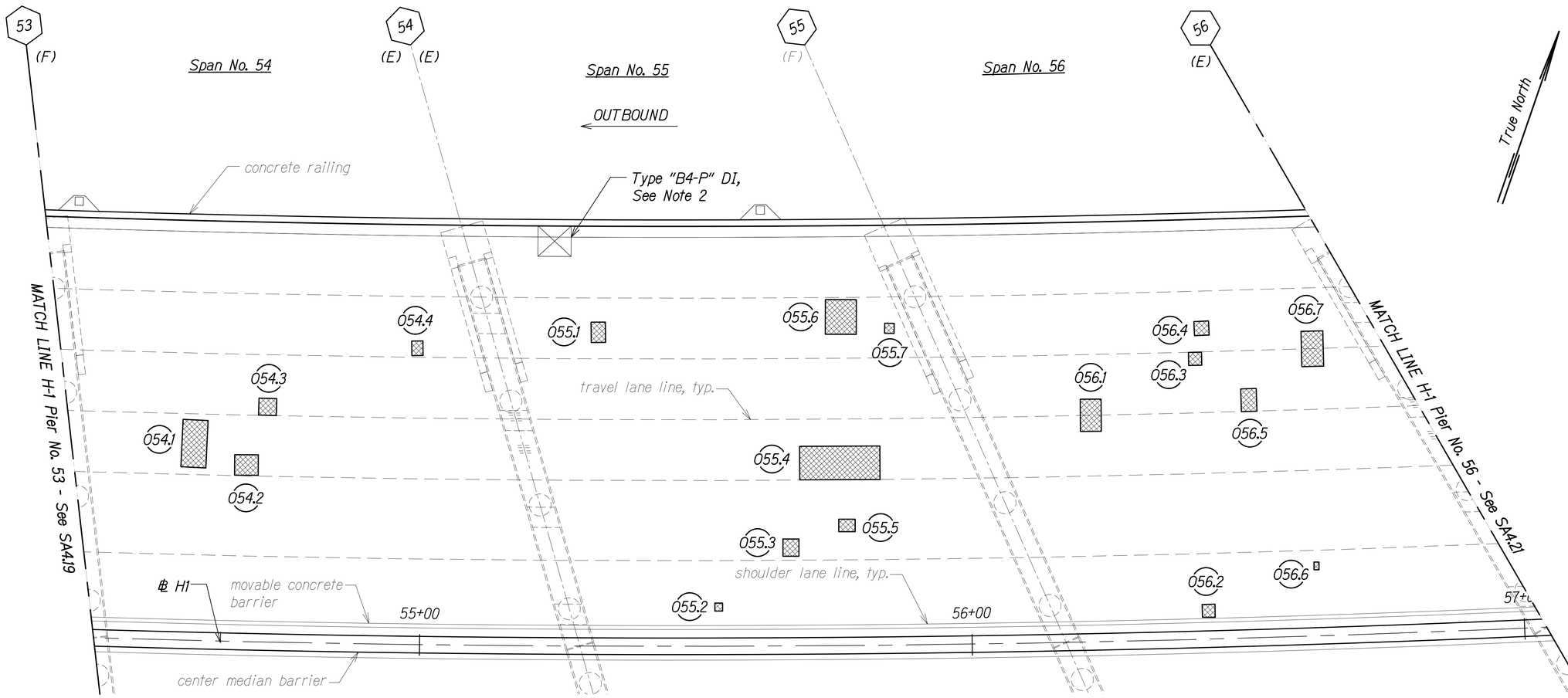

SPAN NO. 54 TO SPAN NO. 56

Scale: 1" = 10'-0"

LEGEND:

- # — Pier No.
- OX.# — Outbound Repair, See Schedules on SA5.1 to SA5.6
  - Defect No.
  - Span No.
  - Outbound
- Repair Area
- (E) Expansion Joint, See Note 1
- (F) Fixed Joint
- (H) Hinged Joint

NOTES:

1. All expansion joint compression seals shall be replaced. See SA10.1 to SA10.5.
2. Drain inlet grates shall be replaced and drain inlet frames shall be raised. See SA9.6 to SA9.8.

ERIC Y. MATSUMOTO
LICENSED PROFESSIONAL ENGINEER
NO. 10156-S
HAWAII, U.S.A.

THIS WORK WAS PREPARED BY ME OR UNDER MY SUPERVISION.

SIGNATURE — EXPIRATION DATE OF THE LICENSE 4-30-24

STATE OF HAWAII
DEPARTMENT OF TRANSPORTATION
HIGHWAYS DIVISION

PEARL CITY VIADUCT OB
REPAIR PLAN SPAN NO. 54 TO SPAN NO. 56
INTERSTATE ROUTE H-1 IMPROVEMENTS
Vicinity of Pearl City Viaduct to Waimalu Viaduct
Federal-Aid Project No. NH-H1-1(285)

Scale: As Noted — Date: May 2023

SHEET No. SA4.20 OF 23 SHEETS

228

ORIGINAL PLAN	SURVEY PLOTTED BY	DATE
	DRAWN BY	
NOTE BOOK	TRACED BY	
	DESIGNED BY	
No.	QUANTITIES BY	
	CHECKED BY	

DRAWING NAME: Z:\00 ONGOING\22-0018 PEARL CITY VIADUCT REPAIRS\01 CAD\05-23-23 10GPCY\PCVR-SA0401 PCV OB DECK REPAIR LAYPLAN.DWG PLOT TIME: 05-23-23, 3:59 PM

FED. ROAD DIST. NO.	STATE	FEDERAL AID PROJ. NO.	FISCAL YEAR	SHEET NO.	TOTAL SHEETS
HAWAII	HAW.	NH-HI-1(285)	2023	229	287

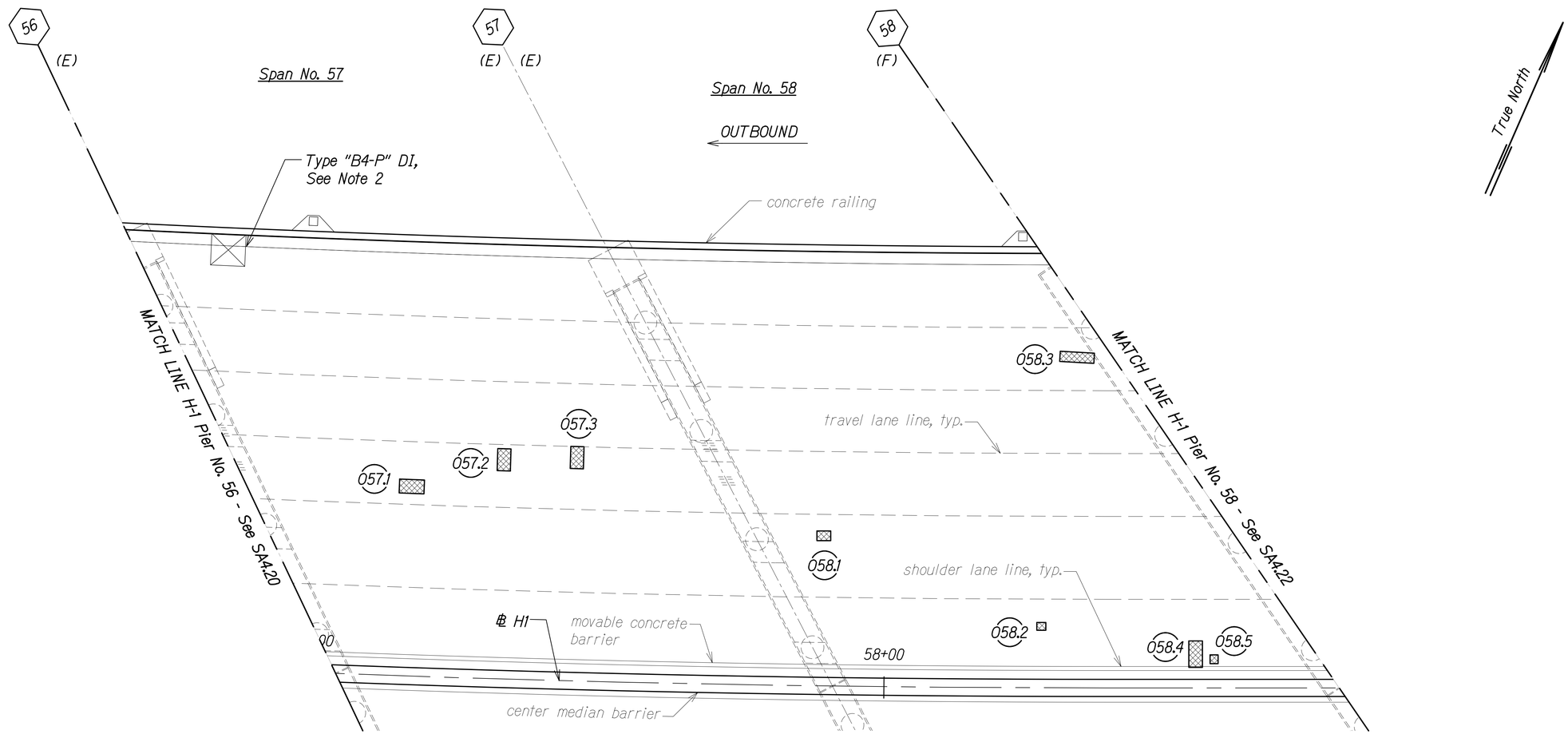

SPAN NO. 57 AND SPAN NO. 58

Scale: 1" = 10'-0"

LEGEND:

- # — Pier No.
- OX.# — Outbound Repair, See Schedules on SA5.1 to SA5.6
  - Defect No.
  - Span No.
  - Outbound
- Repair Area
- (E) Expansion Joint, See Note 1
- (F) Fixed Joint
- (H) Hinged Joint

NOTES:

1. All expansion joint compression seals shall be replaced. See SA10.1 to SA10.5.
2. Drain inlet grates shall be replaced and drain inlet frames shall be raised. See SA9.6 to SA9.8.

ERIC Y. MATSUMOTO
LICENSED PROFESSIONAL ENGINEER
NO. 10156-S
HAWAII, U.S.A.

THIS WORK WAS PREPARED BY ME OR UNDER MY SUPERVISION.

SIGNATURE — EXPIRATION DATE OF THE LICENSE 4-30-24

STATE OF HAWAII
DEPARTMENT OF TRANSPORTATION
HIGHWAYS DIVISION

PEARL CITY VIADUCT OB
REPAIR PLAN SPAN NO. 57 AND SPAN NO. 58

INTERSTATE ROUTE H-1 IMPROVEMENTS
Vicinity of Pearl City Viaduct to Waimalu Viaduct
Federal-Aid Project No. NH-HI-1(285)

Scale: As Noted — Date: May 2023

SHEET No. SA4.21 OF 23 SHEETS

229

ORIGINAL PLAN	SURVEY PLOTTED BY	DATE
	DRAWN BY	
NOTE BOOK	TRACED BY	
	DESIGNED BY	
No.	QUANTITIES BY	
	CHECKED BY	

DRAWING NAME: Z:\OD ONGOING\22-201.8 PEARL CITY VIADUCT REPAIRS\01 CAD\05-25-23 1GRPC1\POYR-SA0401 POV OB DECK REPAIR LAYPLAN.DWG PLOT TIME: 05-24-23, 3:20 PM

FED. ROAD DIST. NO.	STATE	FEDERAL AID PROJ. NO.	FISCAL YEAR	SHEET NO.	TOTAL SHEETS
HAWAII	HAW.	NH-H1-1(285)	2023	230	287

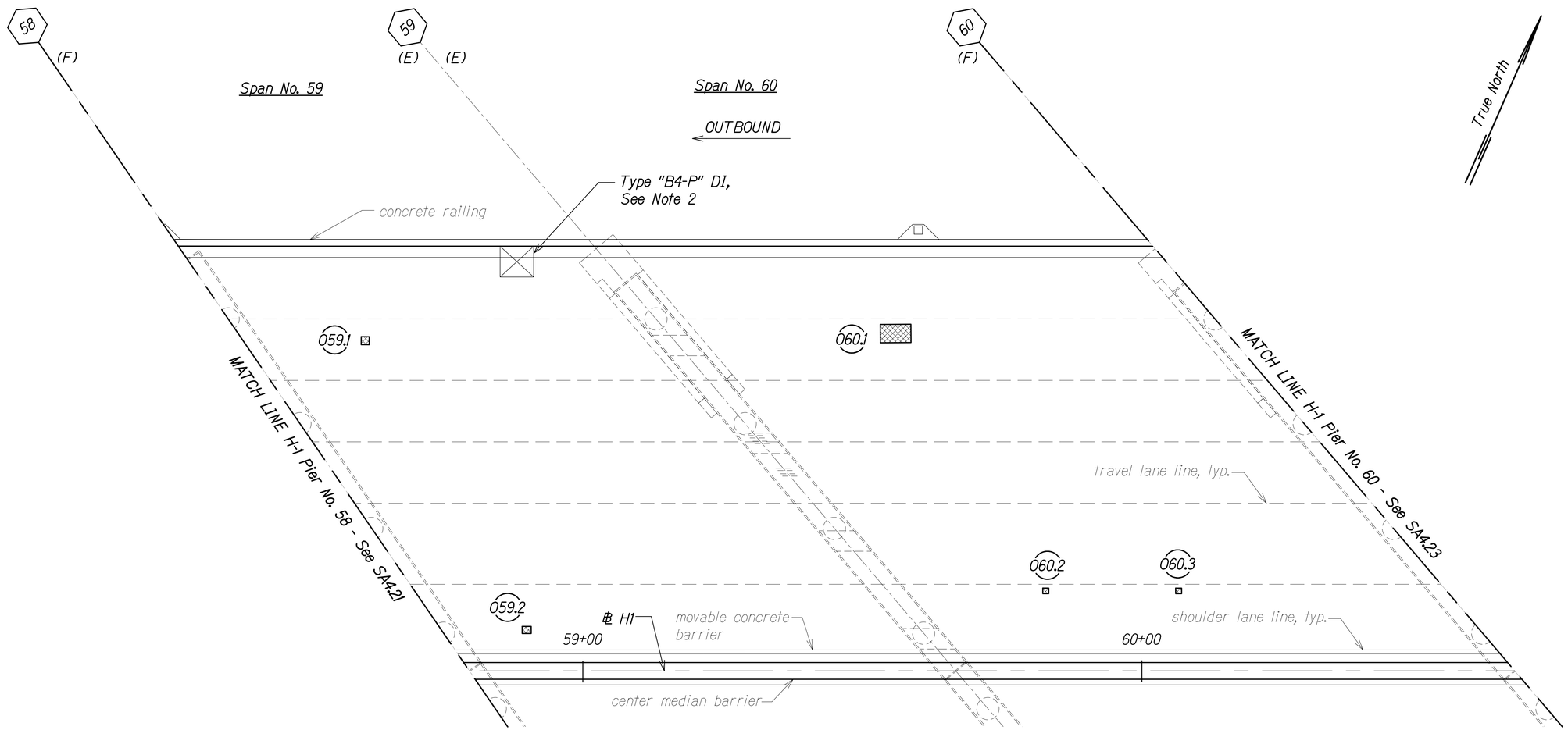

SPAN NO. 59 AND SPAN NO. 60

Scale: 1" = 10'-0"

LEGEND:

- # — Pier No.
- OX.# — Outbound Repair, See Schedules on SA5.1 to SA5.6
  - Defect No.
  - Span No.
  - Outbound
- Repair Area
- (E) Expansion Joint, See Note 1
- (F) Fixed Joint
- (H) Hinged Joint

NOTES:

1. All expansion joint compression seals shall be replaced. See SA10.1 to SA10.5.
2. Drain inlet grates shall be replaced and drain inlet frames shall be raised. See SA9.6 to SA9.8.

ERIC Y. MATSUMOTO
LICENSED PROFESSIONAL ENGINEER
NO. 10156-S
HAWAII, U.S.A.

THIS WORK WAS PREPARED BY ME OR UNDER MY SUPERVISION.

SIGNATURE — EXPIRATION DATE OF THE LICENSE 4-30-24

STATE OF HAWAII
DEPARTMENT OF TRANSPORTATION
HIGHWAYS DIVISION

PEARL CITY VIADUCT OB
REPAIR PLAN SPAN NO. 59 AND SPAN NO. 60

INTERSTATE ROUTE H-1 IMPROVEMENTS
Vicinity of Pearl City Viaduct to Waimalu Viaduct
Federal-Aid Project No. NH-H1-1(285)

Scale: As Noted — Date: May 2023

SHEET No. SA4.22 OF 23 SHEETS

230

ORIGINAL PLAN — SURVEY PLOTTED BY — DRAWN BY — TRACED BY — DESIGNED BY — QUANTITIES BY — CHECKED BY — DATE — NOTE BOOK — No.

DRAWING NAME: Z:\OD ONGOING\22-001.B PEARL CITY VIADUCT REPAIRS\01 CAD\05-23-23 100PCT\PCVR-SA0401 POV OB DECK REPAIR LAYPLAN.DWG PLOT TIME: 05-23-23, 3:59 PM

FED. ROAD DIST. NO.	STATE	FEDERAL AID PROJ. NO.	FISCAL YEAR	SHEET NO.	TOTAL SHEETS
HAWAII	HAW.	NH-H1-1(285)	2023	231	287

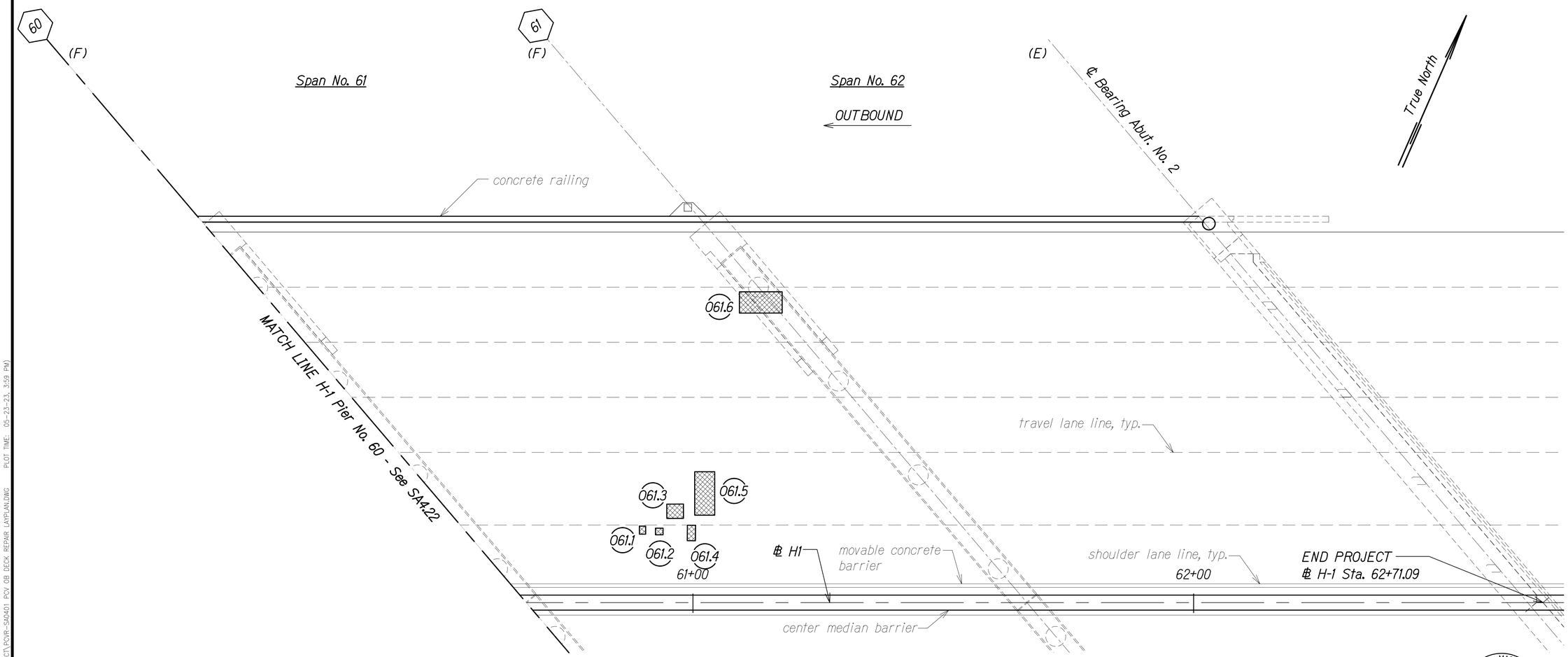

SPAN NO. 61 AND SPAN NO. 62

Scale: 1" = 10'-0"

LEGEND:

- # — Pier No.
- OX.# — Outbound Repair, See Schedules on SA5.1 to SA5.6
  - Defect No.
  - Span No.
  - Outbound
- Repair Area
- (E) Expansion Joint, See Note
- (F) Fixed Joint
- (H) Hinged Joint

NOTE:

All expansion joint compression seals shall be replaced. See SA10.1 to SA10.5.

ERIC Y. MATSUMOTO
LICENSED PROFESSIONAL ENGINEER
NO. 10156-S
HAWAII, U.S.A.

THIS WORK WAS PREPARED BY ME OR UNDER MY SUPERVISION.

SIGNATURE — EXPIRATION DATE OF THE LICENSE 4-30-24

STATE OF HAWAII
DEPARTMENT OF TRANSPORTATION
HIGHWAYS DIVISION

PEARL CITY VIADUCT OB
REPAIR PLAN SPAN NO. 61 AND SPAN NO. 62

INTERSTATE ROUTE H-1 IMPROVEMENTS
Vicinity of Pearl City Viaduct to Waimalu Viaduct
Federal-Aid Project No. NH-H1-1(285)

Scale: As Noted — Date: May 2023

SHEET No. SA4.23 OF 23 SHEETS

231

ORIGINAL PLAN	SURVEY PLOTTED BY	DATE
	DRAWN BY	" " " "
NOTE BOOK	TRACED BY	
	DESIGNED BY	
No.	QUANTITIES BY	
	CHECKED BY	

DRAWING NAME: Z:\OD ONGOING\22-0018 PEARL CITY VIADUCT REPAIRS\01 CAD\05-23-23 100PCT\PCVR-SA0401 PCV OB DECK REPAIR LAYPLAN.DWG PLOT TIME: 05-23-23, 3:59 PM

FED. ROAD DIST. NO.	STATE	FEDERAL AID PROJ. NO.	FISCAL YEAR	SHEET NO.	TOTAL SHEETS
HAWAII	HAW.	NH-H1-1(285)	2023	232	287

PEARL CITY VIADUCT OB REPAIR SCHEDULE

DEFECT NO.	SPAN NO.	REPAIR DETAIL	AREA (SF)
01.1	1	A SA5.1 SA8.1	4
01.2	1		2
01.3	1		18
01.4	1		18
01.5	1		7
01.6	1/2		21
01.7	1/2		12
01.8	1		4
02.1	2		5
02.2	2		5
02.3	2		4
02.4	2		3
02.5	2		2
02.6	2		17
02.7	2		3
02.8	2		7
02.9	2		6
02.10	2		3
03.1	3		3
03.2	3		13

PEARL CITY VIADUCT OB REPAIR SCHEDULE

DEFECT NO.	SPAN NO.	REPAIR DETAIL	AREA (SF)
03.3	3	A SA5.1 SA8.1	53
03.4	3		159
03.5	3		21
04.1	4		21
04.2	4		15
04.3	4		2
04.4	4		3
04.5	4		2
05.1	5		6
05.2	5		2
06.1	6		4
06.2	6		23
06.3	6		4
06.4	6		4
06.5	6		4
06.6	6		82
06.7	6		7
07.1	7/8		24
08.1	8		65
08.2	8		2

PEARL CITY VIADUCT OB REPAIR SCHEDULE

DEFECT NO.	SPAN NO.	REPAIR DETAIL	AREA (SF)
08.3	8	A SA5.1 SA8.1	2
08.4	8		30
08.5	8		2
08.6	8		2
08.7	8		14
08.8	8		3
08.9	8		3
09.1	9		58
09.2	9		3
09.3	9		3
010.1	9/10		17
010.2	10		4
011.1	11		2
011.2	11		2
011.3	11		15
011.4	11		2
011.5	11		23
012.1	12		8
012.2	12		29
012.3	12		5

ERIC Y. MATSUMOTO
LICENSED PROFESSIONAL ENGINEER
NO. 10156-S
HAWAII, U.S.A.

THIS WORK WAS PREPARED BY ME OR UNDER MY SUPERVISION.

SIGNATURE — EXPIRATION DATE OF THE LICENSE 4-30-24

STATE OF HAWAII
DEPARTMENT OF TRANSPORTATION
HIGHWAYS DIVISION

PEARL CITY VIADUCT
OB REPAIR SCHEDULES

INTERSTATE ROUTE H-1 IMPROVEMENTS
Vicinity of Pearl City Viaduct to Waimalu Viaduct
Federal-Aid Project No. NH-H1-1(285)

Scale: None — Date: May 2023

SHEET No. SA5.1 OF 6 SHEETS

ORIGINAL PLAN — NOTE BOOK No. — SURVEY PLOTTED BY — DRAWN BY — TRACED BY — DESIGNED BY — QUANTITIES BY — CHECKED BY — DATE

DRAWING NAME: Z:\OD ONGOING\22-001.8 PEARL CITY VIADUCT REPAIRS\01 CAD\05-23-23 1000PCT\PCVR-SA0501 PCV OB SCHED REPAIR.DWG PLOT TIME: 05-24-23, 9:18 AM

FED. ROAD DIST. NO.	STATE	FEDERAL AID PROJ. NO.	FISCAL YEAR	SHEET NO.	TOTAL SHEETS
HAWAII	HAW.	NH-H1-1(285)	2023	233	287

PEARL CITY VIADUCT OB REPAIR SCHEDULE

DEFECT NO.	SPAN NO.	REPAIR DETAIL		AREA (SF)
012.4	12	A SA5.2 SA8.1		4
013.1	13			8
013.2	13			14
014.1	14			5
014.2	14			1
014.3	14			1
014.4	14			9
015.1	15			17
016.1	16			11
016.2	16			4
016.3	16			11
016.4	16			3
016.5	16			11
017.1	16/17			23
017.2	17			6
017.3	17/18			18
018.1	18			6
019.1	19			17
019.2	19			84
019.3	19/20			21

PEARL CITY VIADUCT OB REPAIR SCHEDULE

DEFECT NO.	SPAN NO.	REPAIR DETAIL		AREA (SF)
019.4	19	A SA5.2 SA8.1		3
020.1	20			6
020.2	20			12
020.3	20			20
021.1	21			7
021.2	21			183
021.3	21/22			142
021.4	21			3
022.1	21/22			17
022.2	22			2
022.3	22			10
022.4	22			5
022.5	22			12
022.6	22			6
022.7	22			2
022.8	22			2
023.1	23			3
023.2	23			7
023.3	23			3
023.4	23			9

PEARL CITY VIADUCT OB REPAIR SCHEDULE

DEFECT NO.	SPAN NO.	REPAIR DETAIL		AREA (SF)
023.5	23	A SA5.2 SA8.1		9
023.6	23			3
023.7	23			114
023.8	23			3
023.9	23			17
024.1	23/24			21
024.2	24			9
024.3	24			3
024.4	24			14
024.5	24			3
024.6	24			21
024.7	24			4
024.8	24			4
024.9	24			10
024.10	24			3
024.11	24			1
024.12	24			2
024.13	24			2
024.14	24			12
024.15	24			31

ERIC Y. MATSUMOTO
LICENSED PROFESSIONAL ENGINEER
NO. 10156-S
HAWAII, U.S.A.

THIS WORK WAS PREPARED BY ME OR UNDER MY SUPERVISION.

SIGNATURE — EXPIRATION DATE OF THE LICENSE 4-30-24

STATE OF HAWAII
DEPARTMENT OF TRANSPORTATION
HIGHWAYS DIVISION

PEARL CITY VIADUCT OB REPAIR SCHEDULES

INTERSTATE ROUTE H-1 IMPROVEMENTS
Vicinity of Pearl City Viaduct to Waimalu Viaduct
Federal-Aid Project No. NH-H1-1(285)

Scale: None — Date: May 2023

SHEET No. SA5.2 OF 6 SHEETS

ORIGINAL PLAN — NOTE BOOK No. — SURVEY PLOTTED BY — DRAWN BY — TRACED BY — DESIGNED BY — QUANTITIES BY — CHECKED BY — DATE

DRAWING NAME: Z:\OD ONGOING\22-001.8 PEARL CITY VIADUCT REPAIRS\01 CAD\05-23-23 1000CT\PCVR-SA0501 PCV OB SCHED REPAIR.DWG PLOT TIME: 05-24-23, 9:18 AM

FED. ROAD DIST. NO.	STATE	FEDERAL AID PROJ. NO.	FISCAL YEAR	SHEET NO.	TOTAL SHEETS
HAWAII	HAW.	NH-H1-1(285)	2023	234	287

PEARL CITY VIADUCT OB REPAIR SCHEDULE

DEFECT NO.	SPAN NO.	REPAIR DETAIL		AREA (SF)
025.1	25	A SA5.3 SA8.1		38
025.2	25			7
025.3	25			7
025.4	25			3
025.5	25			5
026.1	25/26			24
026.2	26			12
026.3	26			4
026.4	26			4
026.5	26			7
026.6	26			4
027.1	27			17
027.2	27			3
027.3	27			19
027.4	27			3
027.5	27			44
027.6	27			36
027.7	27/28			64
028.1	27/28			69
028.2	28			33

PEARL CITY VIADUCT OB REPAIR SCHEDULE

DEFECT NO.	SPAN NO.	REPAIR DETAIL		AREA (SF)
028.3	28	A SA5.3 SA8.1		25
028.4	28			90
029.1	29			35
029.2	29			7
030.1	29/30			19
030.2	30			2
030.3	30			13
030.4	30			4
030.5	30			10
031.1	31			7
031.2	31			6
031.3	31/32			20
032.1	32			33
032.2	32			5
032.3	32			21
032.4	32			25
032.5	32			18
032.6	32			12
033.1	33			21
033.2	33			2

PEARL CITY VIADUCT OB REPAIR SCHEDULE

DEFECT NO.	SPAN NO.	REPAIR DETAIL		AREA (SF)
033.3	33	A SA5.3 SA8.1		12
033.4	33			3
033.5	33			28
033.6	33			3
033.7	33			2
034.1	34			19
034.2	34			5
034.3	34			18
034.4	34			188
034.5	34			7
034.6	34			15
034.7	34			4
034.8	34			4
035.1	35			10
035.2	35			21
035.3	35			10
035.4	35			5
035.5	35			4
035.6	35			14
035.7	35			7

ERIC Y. MATSUMOTO
LICENSED PROFESSIONAL ENGINEER
NO. 10156-S
HAWAII, U.S.A.

THIS WORK WAS PREPARED BY ME OR UNDER MY SUPERVISION.

4-30-24
SIGNATURE EXPIRATION DATE OF THE LICENSE

STATE OF HAWAII
DEPARTMENT OF TRANSPORTATION
HIGHWAYS DIVISION

PEARL CITY VIADUCT
OB REPAIR SCHEDULES

INTERSTATE ROUTE H-1 IMPROVEMENTS
Vicinity of Pearl City Viaduct to Waimalu Viaduct
Federal-Aid Project No. NH-H1-1(285)

Scale: None Date: May 2023

SHEET No. SA5.3 OF 6 SHEETS

ORIGINAL PLAN
NOTE BOOK No.
SURVEY PLOTTED BY
DRAWN BY
TRACED BY
DESIGNED BY
QUANTITIES BY
CHECKED BY
DATE

DRAWING NAME: Z:\OD ONGOING\22-001 B PEARL CITY VIADUCT REPAIRS\01 CAD\05-23-23 1000CT\PCVR-SA0501 PCV OB SCHED REPAIR.DWG PLOT TIME: 05-24-23, 9:19 AM

FED. ROAD DIST. NO.	STATE	FEDERAL AID PROJ. NO.	FISCAL YEAR	SHEET NO.	TOTAL SHEETS
HAWAII	HAW.	NH-H1-1(285)	2023	235	287

PEARL CITY VIADUCT OB REPAIR SCHEDULE

DEFECT NO.	SPAN NO.	REPAIR DETAIL	AREA (SF)
035.8	35	A SA5.4 SA8.1	4
036.1	35/36		17
036.2	36		46
036.3	36		59
036.4	36		2
036.5	36		7
036.6	36		115
036.7	36		4
036.8	36		4
036.9	36		15
036.10	36		2
036.11	36		19
036.12	36		5
036.13	36		3
036.14	36		8
036.15	36		11
036.16	36		8
036.17	36		5
036.18	36		9
036.19	36		52

PEARL CITY VIADUCT OB REPAIR SCHEDULE

DEFECT NO.	SPAN NO.	REPAIR DETAIL	AREA (SF)
037.1	37	A SA5.4 SA8.1	6
037.2	37		2
038.1	37/38		18
038.2	38		1
038.3	38		6
038.4	38/39		16
039.1	39		5
039.2	39		2
039.3	39		5
039.4	39		5
039.5	39		49
039.6	39		3
039.7	39		10
039.8	39		3
040.1	40		6
041.1	40/41		13
042.1	42		3
043.1	42/43		21
044.1	44		4
044.2	44		6

PEARL CITY VIADUCT OB REPAIR SCHEDULE

DEFECT NO.	SPAN NO.	REPAIR DETAIL	AREA (SF)
044.3	44	A SA5.4 SA8.1	4
044.4	44		7
044.5	44/45		16
045.1	44/45		48
045.2	45		4
045.3	45		12
045.4	45		16
045.5	45		7
046.1	45/46		19
046.2	46		3
046.3	46		22
046.4	46		34
046.5	46		15
046.6	46		36
046.7	46		37
046.8	46		17
046.9	46		2
047.1	47		16
047.2	47		4
048.1	48		13

ERIC Y. MATSUMOTO
LICENSED PROFESSIONAL ENGINEER
NO. 10156-S
HAWAII, U.S.A.

THIS WORK WAS PREPARED BY ME OR UNDER MY SUPERVISION.

SIGNATURE — EXPIRATION DATE OF THE LICENSE 4-30-24

STATE OF HAWAII
DEPARTMENT OF TRANSPORTATION
HIGHWAYS DIVISION

PEARL CITY VIADUCT OB REPAIR SCHEDULES

INTERSTATE ROUTE H-1 IMPROVEMENTS
Vicinity of Pearl City Viaduct to Waimalu Viaduct
Federal-Aid Project No. NH-H1-1(285)

Scale: None — Date: May 2023

SHEET No. SA5.4 OF 6 SHEETS

ORIGINAL PLAN — NOTE BOOK No. — SURVEY PLOTTED BY — DRAWN BY — TRACED BY — DESIGNED BY — QUANTITIES BY — CHECKED BY — DATE

DRAWING NAME: Z:\OD ONGOING\22-001.8 PEARL CITY VIADUCT REPAIRS\01 CAD\05-23-23 100PCT\PCVR-SA0501 PCV OB SCHED REPAIR.DWG PLOT TIME: 05-24-23, 9:19 AM

FED. ROAD DIST. NO.	STATE	FEDERAL AID PROJ. NO.	FISCAL YEAR	SHEET NO.	TOTAL SHEETS
HAWAII	HAW.	NH-H1-1(285)	2023	236	287

PEARL CITY VIADUCT OB REPAIR SCHEDULE

DEFECT NO.	SPAN NO.	REPAIR DETAIL		AREA (SF)
048.2	48	A SA5.5 SA8.1		10
048.3	48			45
048.4	48			9
048.5	48			10
048.6	48			15
048.7	48			18
048.8	48			7
048.9	48			58
048.10	48			36
048.11	48			1
048.12	48			18
048.13	48			3
048.14	48			88
048.15	48			2
048.16	48			11
048.17	48			6
048.18	48			18
048.19	48			102
048.20	49/49			15
049.1	49			24

PEARL CITY VIADUCT OB REPAIR SCHEDULE

DEFECT NO.	SPAN NO.	REPAIR DETAIL		AREA (SF)
049.2	49	A SA5.5 SA8.1		6
050.1	50			19
050.2	50			2
050.3	50			10
050.4	50			28
050.5	50			5
051.1	51			20
051.2	51			2
051.3	51			2
051.4	51			4
051.5	51			22
052.1	52			6
053.1	53			9
053.2	53			195
053.3	53			3
053.4	53			3
053.5	53			12
053.6	53			29
053.7	53			8
053.8	53			9

PEARL CITY VIADUCT OB REPAIR SCHEDULE

DEFECT NO.	SPAN NO.	REPAIR DETAIL		AREA (SF)
053.9	53	A SA5.5 SA8.1		7
054.1	54			39
054.2	54			16
054.3	54			10
054.4	54			5
055.1	55			9
055.2	55			2
055.3	55			9
055.4	55			88
055.5	55			6
055.6	55			35
055.7	55			3
056.1	56			22
056.2	56			5
056.3	56			5
056.4	56			7
056.5	56			12
056.6	56			1
056.7	56			25
057.1	57			10

ERIC Y. MATSUMOTO
LICENSED PROFESSIONAL ENGINEER
NO. 10156-S
HAWAII, U.S.A.

THIS WORK WAS PREPARED BY ME OR UNDER MY SUPERVISION.

SIGNATURE — EXPIRATION DATE OF THE LICENSE 4-30-24

STATE OF HAWAII
DEPARTMENT OF TRANSPORTATION
HIGHWAYS DIVISION

PEARL CITY VIADUCT OB REPAIR SCHEDULES

INTERSTATE ROUTE H-1 IMPROVEMENTS
Vicinity of Pearl City Viaduct to Waimalu Viaduct
Federal-Aid Project No. NH-H1-1(285)

Scale: None — Date: May 2023

SHEET No. SA5.5 OF 6 SHEETS

ORIGINAL PLAN — NOTE BOOK No. — SURVEY PLOTTED BY — DRAWN BY — TRACED BY — DESIGNED BY — QUANTITIES BY — CHECKED BY — DATE

DRAWING NAME: Z:\OD ONGOING\22-001.8 PEARL CITY VIADUCT REPAIRS\01 CAD\05-23-23 100PCT\PCVR-SA0501 PCV OB SCHED REPAIR.DWG PLOT TIME: 05-24-23, 9:19 AM

FED. ROAD DIST. NO.	STATE	FEDERAL AID PROJ. NO.	FISCAL YEAR	SHEET NO.	TOTAL SHEETS
HAWAII	HAW.	NH-H1-1(285)	2023	237	287

PEARL CITY VIADUCT OB REPAIR SCHEDULE

DEFECT NO.	SPAN NO.	REPAIR DETAIL		AREA (SF)
057.2	57	A SA5.6	SA8.1	9
057.3	57			9
058.1	58			4
058.2	58			2
058.3	58			7
058.4	58			11
058.5	58			2
059.1	59			2
059.2	59			2
060.1	60			18
060.2	60			1
060.3	60			1
061.1	61			2
061.2	61			2
061.3	61			9
061.4	61			5
061.5	61			35
061.6	61/62			36
		TOTAL		5,332

ERIC Y. MATSUMOTO
LICENSED PROFESSIONAL ENGINEER
NO. 10156-S
HAWAII, U.S.A.

THIS WORK WAS PREPARED BY ME OR UNDER MY SUPERVISION.

SIGNATURE — EXPIRATION DATE OF THE LICENSE 4-30-24

STATE OF HAWAII
DEPARTMENT OF TRANSPORTATION
HIGHWAYS DIVISION

PEARL CITY VIADUCT
OB REPAIR SCHEDULES

INTERSTATE ROUTE H-1 IMPROVEMENTS
Vicinity of Pearl City Viaduct to Waimalu Viaduct
Federal-Aid Project No. NH-H1-1(285)

Scale: None — Date: May 2023

SHEET No. SA5.6 OF 6 SHEETS

ORIGINAL PLAN — SURVEY PLOTTED BY ___ DATE ___ DRAWN BY ___ TRACED BY ___ DESIGNED BY ___ QUANTITIES BY ___ CHECKED BY ___
NOTE BOOK No. ___

DRAWING NAME: Z:\OD ONGOING\22-0013 PEARL CITY VIADUCT REPAIRS\01 CAD\05-23-23 100PCT\PCVR-SA0501 PCV OB SCHED REPAIR.DWG PLOT TIME: 05-24-23, 9:19 AM

FED. ROAD DIST. NO.	STATE	FEDERAL AID PROJ. NO.	FISCAL YEAR	SHEET NO.	TOTAL SHEETS
HAWAII	HAW.	NH-H1-1(285)	2023	238	287

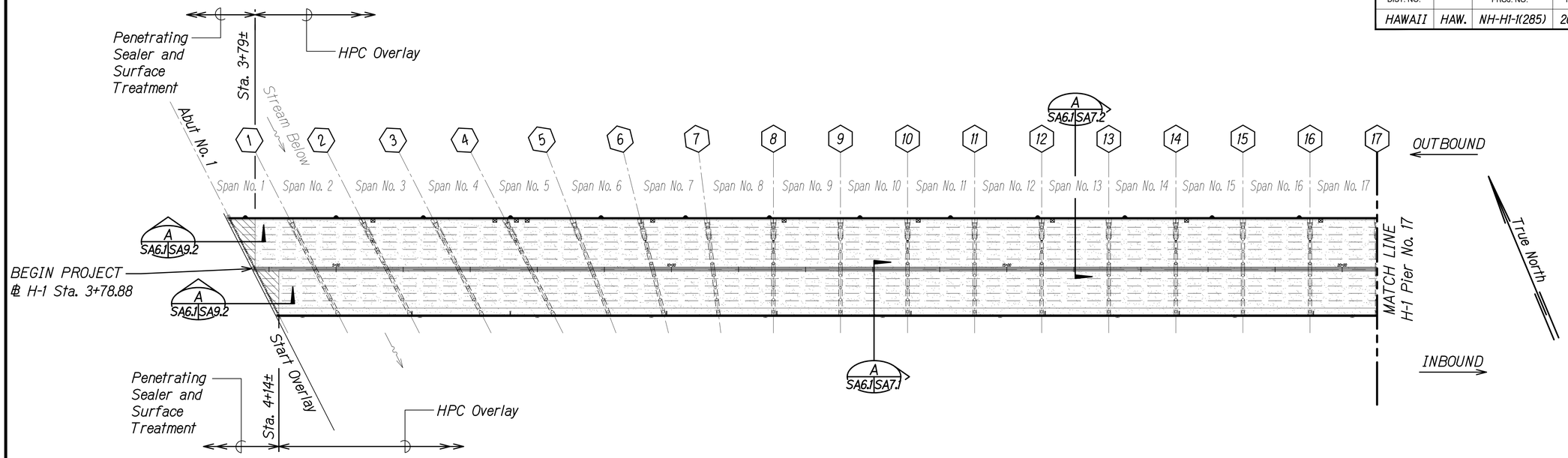

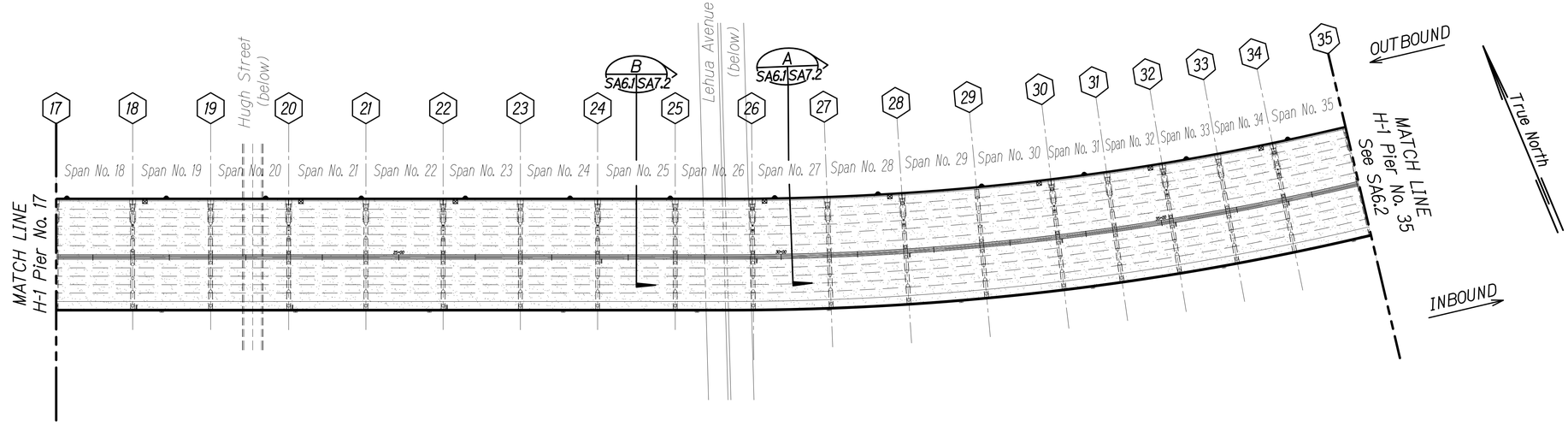

LEGEND:

Penetrating Sealer and Surface Treatment

HPC Overlay

NOTE:

Surface Treatment shall be applied over Penetrating Sealer.

OVERLAY LAYOUT PLAN

Scale: 1" = 80'-0"

ERIC Y. MATSUMOTO
LICENSED PROFESSIONAL ENGINEER
NO. 10156-S
HAWAII, U.S.A.

THIS WORK WAS PREPARED BY ME OR UNDER MY SUPERVISION.

SIGNATURE — EXPIRATION DATE OF THE LICENSE 4-30-24

STATE OF HAWAII
DEPARTMENT OF TRANSPORTATION
HIGHWAYS DIVISION

PEARL CITY VIADUCT
OVERLAY LAYOUT PLAN

INTERSTATE ROUTE H-1 IMPROVEMENTS
Vicinity of Pearl City Viaduct to Waimalu Viaduct
Federal-Aid Project No. NH-H1-1(285)

Scale: As Noted — Date: May 2023

SHEET No. SA6.1 OF 2 SHEETS

ORIGINAL PLAN	SURVEY PLOTTED BY	DATE
	DRAWN BY	
NOTE BOOK	TRACED BY	
	DESIGNED BY	
No.	QUANTITIES BY	
	CHECKED BY	

DRAWING NAME: Z:\OD ORIGINS\22-001.8 PEARL CITY VIADUCT REPAIRS\01 CAD\05-25-23 10GPC\PCVR-SA0601 PCV OVERLAY PLANS.DWG PLOT TIME: 05-25-23, 4:09 PM

FED. ROAD DIST. NO.	STATE	FEDERAL AID PROJ. NO.	FISCAL YEAR	SHEET NO.	TOTAL SHEETS
HAWAII	HAW.	NH-H1-1(285)	2023	239	287

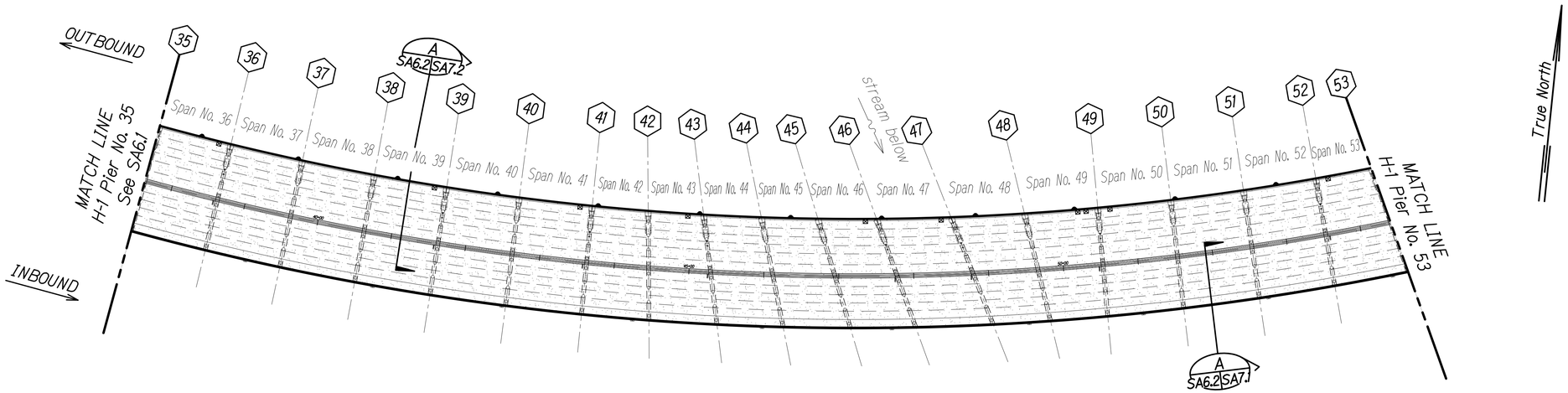

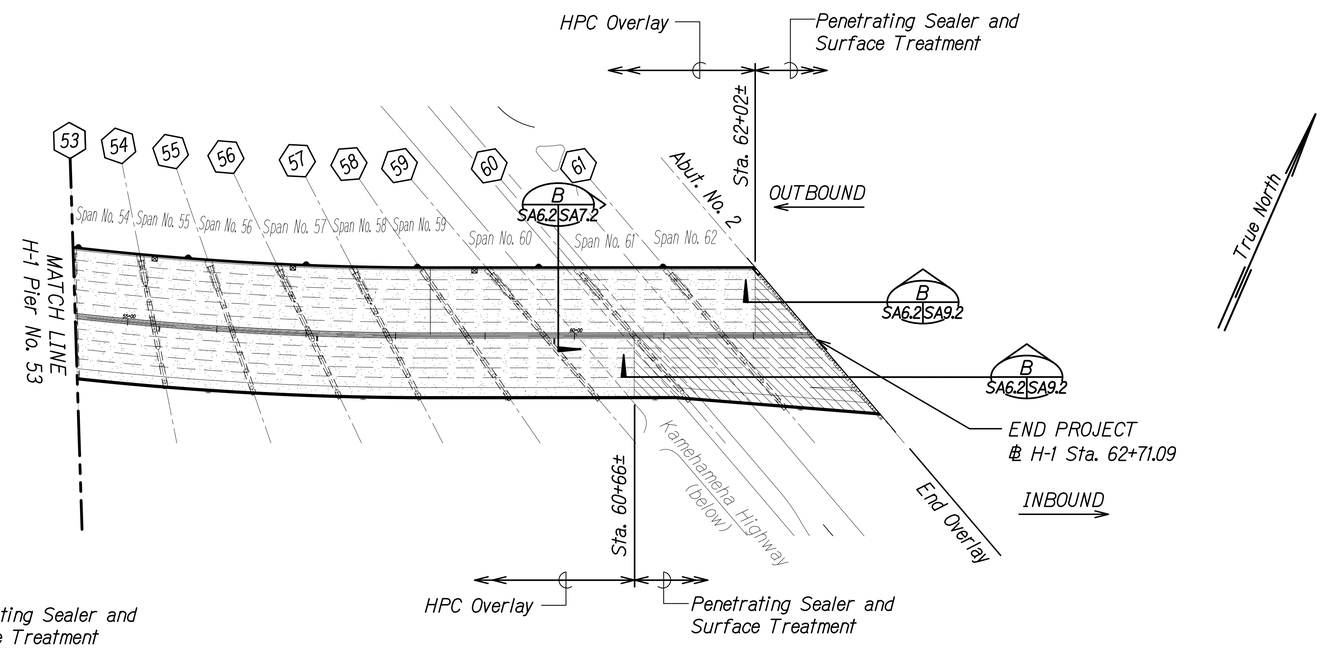

LEGEND:

Penetrating Sealer and Surface Treatment

HPC Overlay

NOTE:

Surface Treatment shall be applied over Penetrating Sealer.

OVERLAY LAYOUT PLAN

Scale: 1" = 80'-0"

ERIC Y. MATSUMOTO
LICENSED PROFESSIONAL ENGINEER
NO. 10156-S
HAWAII, U.S.A.

THIS WORK WAS PREPARED BY ME OR UNDER MY SUPERVISION.

SIGNATURE — EXPIRATION DATE OF THE LICENSE 4-30-24

STATE OF HAWAII
DEPARTMENT OF TRANSPORTATION
HIGHWAYS DIVISION

PEARL CITY VIADUCT
OVERLAY LAYOUT PLAN

INTERSTATE ROUTE H-1 IMPROVEMENTS
Vicinity of Pearl City Viaduct to Waimalu Viaduct
Federal-Aid Project No. NH-H1-1(285)

Scale: As Noted — Date: May 2023

SHEET No. SA6.2 OF 2 SHEETS

ORIGINAL PLAN — SURVEY PLOTTED BY — DRAWN BY — TRACED BY — DESIGNED BY — QUANTITIES BY — CHECKED BY — DATE — NOTE BOOK No.

DRAWING NAME: Z:\OD ENGINEERING\22-001.8 PEARL CITY VIADUCT REPAIRS\01 CAD\05-25-23 1GRPCT\PCVR-SA0601 PCV OVERLAY PLANS.DWG PLOT TIME 05-24-23, 3:22 PM

FED. ROAD DIST. NO.	STATE	FEDERAL AID PROJ. NO.	FISCAL YEAR	SHEET NO.	TOTAL SHEETS
HAWAII	HAW.	NH-H1-1(285)	2023	240	287

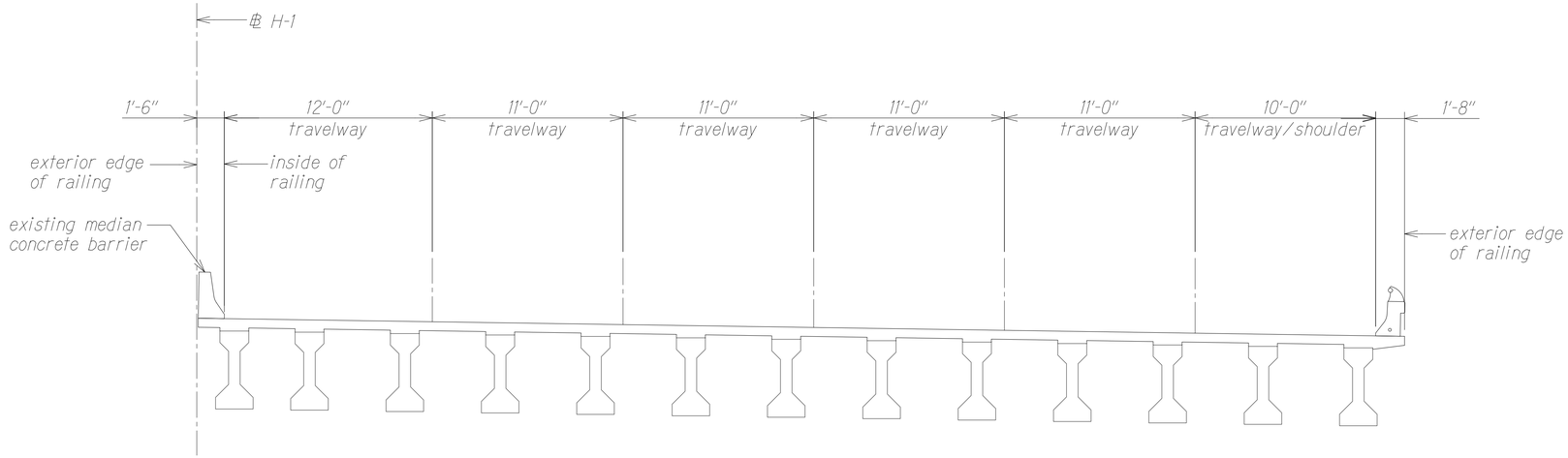

IB TYPICAL DECK SECTION

Scale: 1/4" = 1'-0"

A SA6.1 SA7.1 SA6.2

ORIGINAL DECK THICKNESS SCHEDULE	
SPAN NO.	THICKNESS
1 - 18	6 1/4"
19 - 36	6 1/2"
37 - 46	6 1/2"
47 - 62	6 1/2"

NOTES:

1. Deck thicknesses are based on available as-built plans.
2. The Contractor shall verify deck thickness.

ERIC Y. MATSUMOTO
LICENSED PROFESSIONAL ENGINEER
NO. 10156-S
HAWAII, U.S.A.

THIS WORK WAS PREPARED BY ME OR UNDER MY SUPERVISION.

SIGNATURE — EXPIRATION DATE OF THE LICENSE 4-30-24

STATE OF HAWAII
DEPARTMENT OF TRANSPORTATION
HIGHWAYS DIVISION

PEARL CITY VIADUCT
IB TYPICAL DECK SECTION

INTERSTATE ROUTE H-1 IMPROVEMENTS
Vicinity of Pearl City Viaduct to Waimalu Viaduct
Federal-Aid Project No. NH-H1-1(285)

Scale: As Noted Date: May 2023

SHEET No. SA7.1 OF 2 SHEETS

ORIGINAL PLAN | SURVEY PLOTTED BY | DRAWN BY | TRACED BY | DESIGNED BY | QUANTITIES BY | CHECKED BY | DATE
NOTE BOOK No.

DRAWING NAME: Z:\OD ONGOING\22-001.8 PEARL CITY VIADUCT REPAIRS\01 CAD\05-23-23 1GRPCT\PCVR-SA0701 PCV SECTIONS.DWG PLOT TIME: 05-24-23, 9:20 AM

FED. ROAD DIST. NO.	STATE	FEDERAL AID PROJ. NO.	FISCAL YEAR	SHEET NO.	TOTAL SHEETS
HAWAII	HAW.	NH-H1-1(285)	2023	241	287

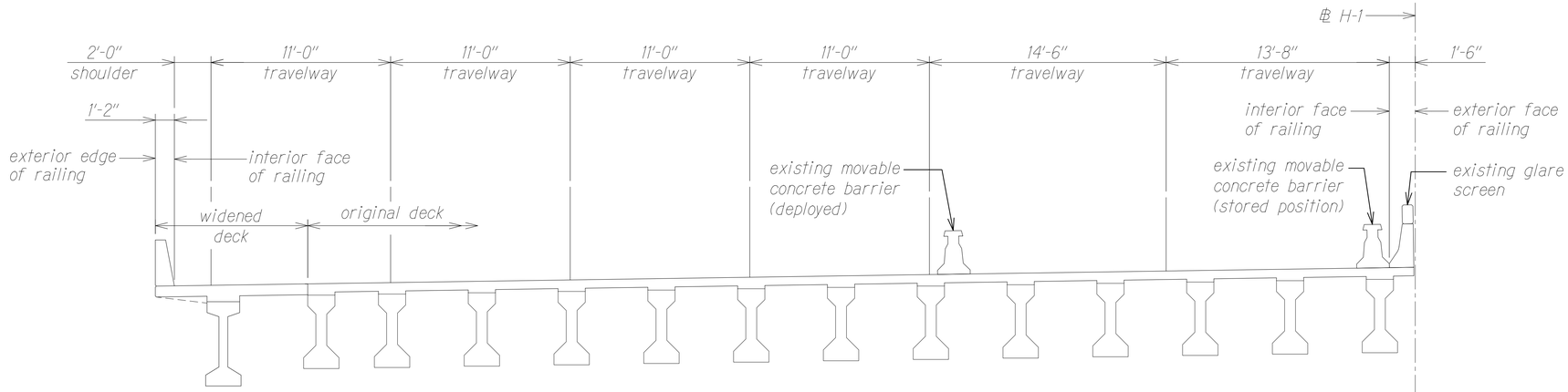

OB TYPICAL DECK SECTION FOR SPAN NOS. 1 TO 24 AND 27 TO 59

Scale: 1/4" = 1'-0"

A
SA6.1 | SA7.2
SA6.2

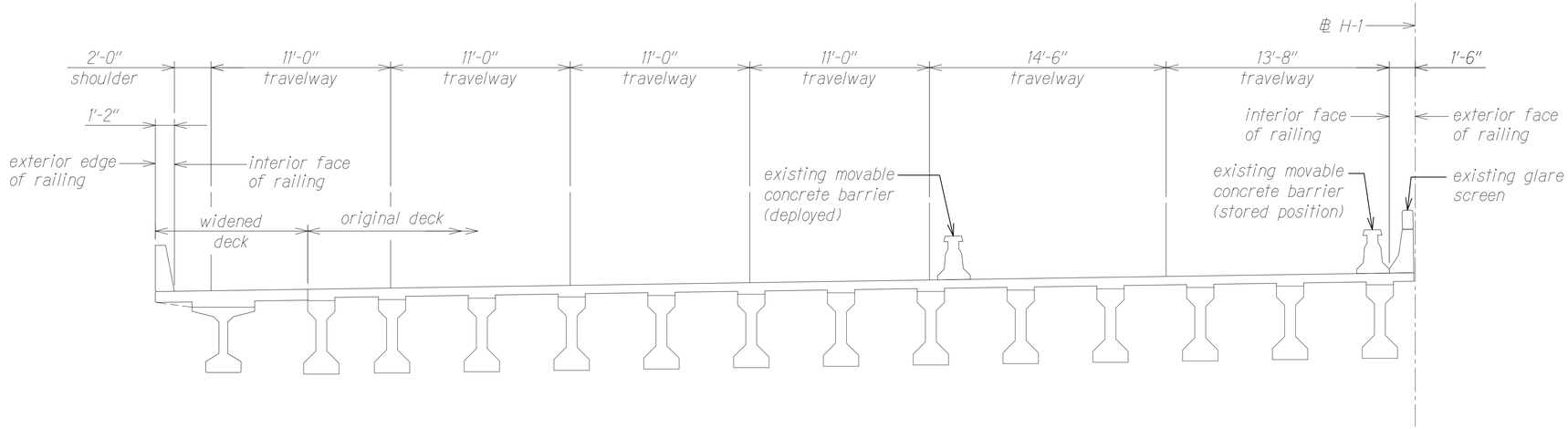

OB TYPICAL DECK SECTION FOR SPAN NOS. 25, 26, 60, 61 AND 62

Scale: 1/4" = 1'-0"

B
SA6.1 | SA7.2
SA6.2

ORIGINAL DECK THICKNESS SCHEDULE	
SPAN NO.	THICKNESS
1 - 18	6 1/4"
19 - 36	6 1/2"
37 - 46	6 1/2"
47 - 62	6 1/2"

OB WIDENING DECK THICKNESS SCHEDULE	
SPAN NO.	THICKNESS
1 - 62	8 1/2"

NOTES:

1. Deck thicknesses are based on available as-built plans.
2. The Contractor shall verify deck thickness.

ERIC Y. MATSUMOTO
LICENSED PROFESSIONAL ENGINEER
NO. 10156-S
HAWAII, U.S.A.

THIS WORK WAS PREPARED BY ME OR UNDER MY SUPERVISION.

SIGNATURE — EXPIRATION DATE OF THE LICENSE 4-30-24

STATE OF HAWAII
DEPARTMENT OF TRANSPORTATION
HIGHWAYS DIVISION

PEARL CITY VIADUCT
OB TYPICAL DECK SECTIONS

INTERSTATE ROUTE H-1 IMPROVEMENTS
Vicinity of Pearl City Viaduct to Waimalu Viaduct
Federal-Aid Project No. NH-H1-1(285)

Scale: As Noted — Date: May 2023

SHEET No. SA7.2 OF 2 SHEETS

ORIGINAL PLAN | SURVEY PLOTTED BY | DRAWN BY | TRACED BY | DESIGNED BY | QUANTITIES BY | CHECKED BY | DATE
NOTE BOOK No.

DRAWING NAME: Z:\OD ONGOING\22-001.8 PEARL CITY VIADUCT REPAIRS\01 CAD\05-25-23 1\OPRCT\PCVR-SA0701 PCV SECTIONS.DWG PLOT TIME: 05-24-23, 3:24 PM

FED. ROAD DIST. NO.	STATE	FEDERAL AID PROJ. NO.	FISCAL YEAR	SHEET NO.	TOTAL SHEETS
HAWAII	HAW.	NH-HI-1(285)	2023	242	287

NOTES:

1. The Contractor shall use a Very Early Strength Latex Modified Concrete (VESLMC) to repair all defective concrete. The Contractor shall be aware of the extensive repair requirements in Section 682 - DEFECTIVE CONCRETE REPAIR of the Special Provisions.

2. Spalls, delaminations, and honeycombing as noted on the drawings shall all be referred to as defective concrete.

3. The Contractor shall completely remove all AC patches on the top of deck and inspect the entire area for concrete defects. The Contractor shall sound all existing concrete that will be overlayed with Penetrating Sealer, Surface Treatment, and HPC.

4. Any existing defective concrete and cracked concrete that the Contractor discovers throughout the construction process that was not shown on the contract documents shall be brought to the attention of the Engineer.

5. All contaminated concrete containing any oil, dirt, etc. shall be removed. The Contractor shall take necessary precautions to avoid damaging the underlying sound concrete.

6. The defective concrete shall be squared by saw-cutting and chipping the concrete at the perimeter beyond the removal area a minimum of 1" to attain a 1 1/2" minimum depth and to prevent feather edge conditions. Exercise great care to avoid vibrating, cutting or damaging any existing embedded steel reinforcing. Angles between adjacent saw-cuts around the perimeter shall be 90 degrees.

7. Existing concrete surfaces within the repair area shall be roughened to ensure proper adhesion. Follow Special Provisions and manufacturer's recommendations for further surface preparation.

8. If any reinforcing steel is observed to have section loss during the removal of existing AC patches, removing unsound concrete, or during surface preparation the Contractor shall follow SA8.2 and the requirements in the Special Provisions.

9. The Contractor shall not saw-cut beyond the repair limits.

10. The Contractor shall coordinate with the Zipper lane operations for repair areas located under the Zipper barrier.

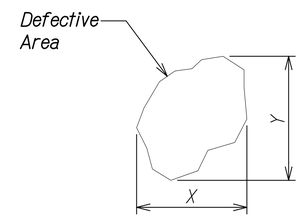

Existing Defective Area = X x Y

TOP DECK PLAN

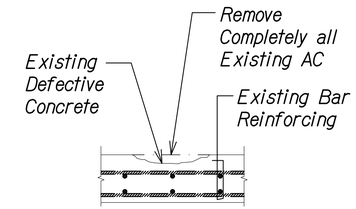

DECK SECTION

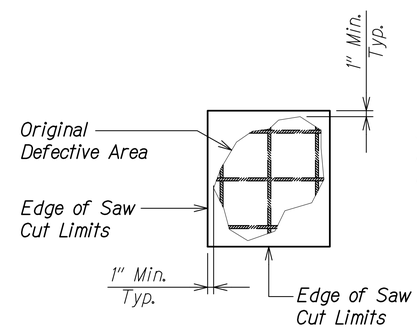

TOP DECK PLAN

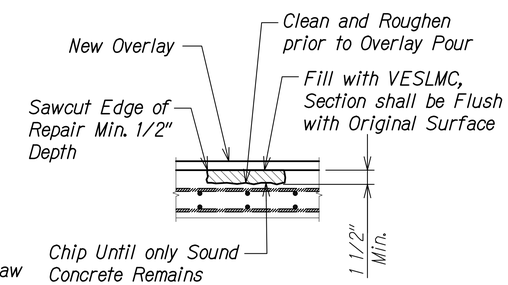

DECK SECTION

CONCRETE DECK REPAIR

Scale: 1" = 1'-0"

A
SA3.1 | SA8.1

SA3.2 to SA3.8, SA5.1 to SA5.6

ERIC Y. MATSUMOTO
LICENSED PROFESSIONAL ENGINEER
NO. 10156-S
HAWAII, U.S.A.

THIS WORK WAS PREPARED BY ME OR UNDER MY SUPERVISION.

SIGNATURE — EXPIRATION DATE OF THE LICENSE 6-30-24

STATE OF HAWAII
DEPARTMENT OF TRANSPORTATION
HIGHWAYS DIVISION

PEARL CITY VIADUCT PARTIAL DEPTH CONCRETE DECK REPAIR DETAILS

INTERSTATE ROUTE H-1 IMPROVEMENTS
Vicinity of Pearl City Viaduct to Waimalu Viaduct
Federal-Aid Project No. NH-HI-1(285)

Scale: As Noted — Date: May 2023

SHEET No. SA8.1 OF 2 SHEETS

ORIGINAL PLAN | SURVEY PLOTTED BY | DRAWN BY | TRACED BY | DESIGNED BY | QUANTITIES BY | CHECKED BY | DATE
NOTE BOOK No.

DRAWING NAME: Z:\OD ONGOING\22-001.8 PEARL CITY VIADUCT REPAIRS\01 CAD\05-23-23 100PCT\PCVR-SA08B1 PCV FULL DEPTH REPAIR.DWG PLOT TIME: 05-23-23, 4:02 PM

FED. ROAD DIST. NO.	STATE	FEDERAL AID PROJ. NO.	FISCAL YEAR	SHEET NO.	TOTAL SHEETS
HAWAII	HAW.	NH-HI-1(285)	2023	243	287

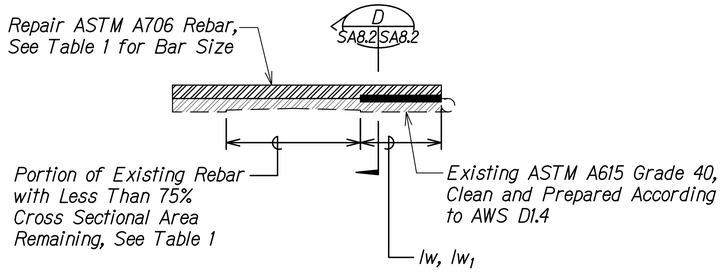

STIRRUP REBAR REPAIR PLAN

Scale: 1" = 1'-0"

A SA8.2 SA8.2

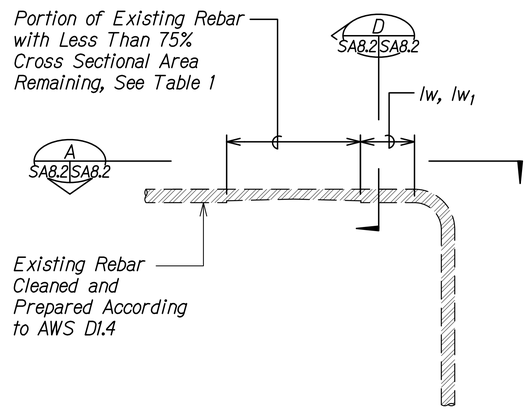

STIRRUP REBAR REPAIR ELEVATION

Scale: 1" = 1'-0"

B SA8.2 SA8.2

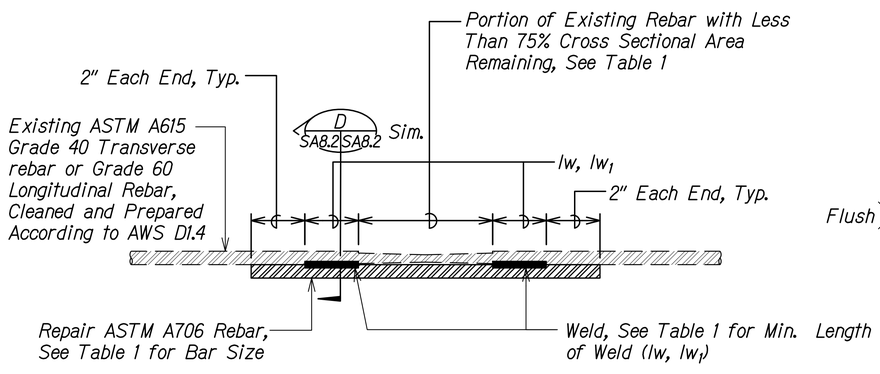

DECK REBAR REPAIR PLAN

Scale: 1" = 1'-0"

C SA8.2 SA8.2

TABLE 1

REPAIR SCHEDULE

SIZE OF EXISTING REINFORCING		SIZE OF NEW REPAIR REINFORCING	MINIMUM LENGTH OF WELD EACH SIDE (lw)	MINIMUM LENGTH OF WELD ONE SIDE (lw_1)
SQUARE	ROUND			
3/8"	#3	#4	2"	4"
	#4	#4	2"	4"
1/2"	#5	#5	2 1/2"	5"
5/8"	#6	#6	3 1/2"	5"
3/4"	#7	#7	4"	-
7/8" OR 1"	#8	#8	5"	-

NOTES:

1. Repair reinforcing shall be spliced to existing reinforcing so as not to reduce the existing clear cover.
2. For welding of #3, #4, #5, & #6 repair reinforcing, welding may be performed on one side only, if lw is increased to lw_1 as shown in Table 1.
3. All welding procedures shall conform to AWS D1.4 and shall be performed by a qualified welder. Electrode classifications shall be in accordance with matching filler metal requirements.
4. All Welding Procedure Specifications (WPS's) shall either be prequalified or shall have an accompanying Procedure Qualification Record (PQR) and shall be submitted and approved by the Engineer prior to starting any work. The WPS's shall take into account the differing base metals (ASTM A615 Grade 40 and 60 and ASTM A706) to be joined.
5. The Contractor shall be responsible for retaining the services of a certified third-party welding inspector to be present full-time during all welding operations. In addition to visual inspection, all welds shall be tested via Liquid Penetrant testing and Magnetic Particle testing for all stirrups & reinforcing larger than a #5.
6. Do not weld in inclement or wet weather unless protection accepted by the Engineer is provided.

OPTION NO. 1 (lw) OPTION NO. 2 (lw_1)

lw = Length of Weld Each Side
lw_1 = Length of Weld One Side
See Table 1

REBAR SECTIONS

Scale: 1" = 1'-0"

D SA8.2 SA8.2

ERIC Y. MATSUMOTO
LICENSED PROFESSIONAL ENGINEER
NO. 10156-S
HAWAII, U.S.A.

THIS WORK WAS PREPARED BY ME OR UNDER MY SUPERVISION.

SIGNATURE EXPIRATION DATE OF THE LICENSE 4-30-24

STATE OF HAWAII
DEPARTMENT OF TRANSPORTATION
HIGHWAYS DIVISION

PEARL CITY VIADUCT
REBAR REPAIR DETAILS

INTERSTATE ROUTE H-1 IMPROVEMENTS
Vicinity of Pearl City Viaduct to Waimalu Viaduct
Federal-Aid Project No. NH-HI-1(285)

Scale: As Noted Date: May 2023

SHEET No. SA8.2 OF 2 SHEETS

ORIGINAL PLAN | SURVEY PLOTTED BY | DRAWN BY | TRACED BY | DESIGNED BY | QUANTITIES BY | CHECKED BY | DATE
NOTE BOOK No.

DRAWING NAME: Z:\OD ONGOING\22-031.3 PEARL CITY VIADUCT REPAIRS\01 CAD\05-23-23 100PCT\PCVR-SA0802 PCV REBAR REPAIR.DWG PLOT TIME: 05-24-23, 9:21 AM

FED. ROAD DIST. NO.	STATE	FEDERAL AID PROJ. NO.	FISCAL YEAR	SHEET NO.	TOTAL SHEETS
HAWAII	HAW.	NH-H1-1(285)	2023	244	287

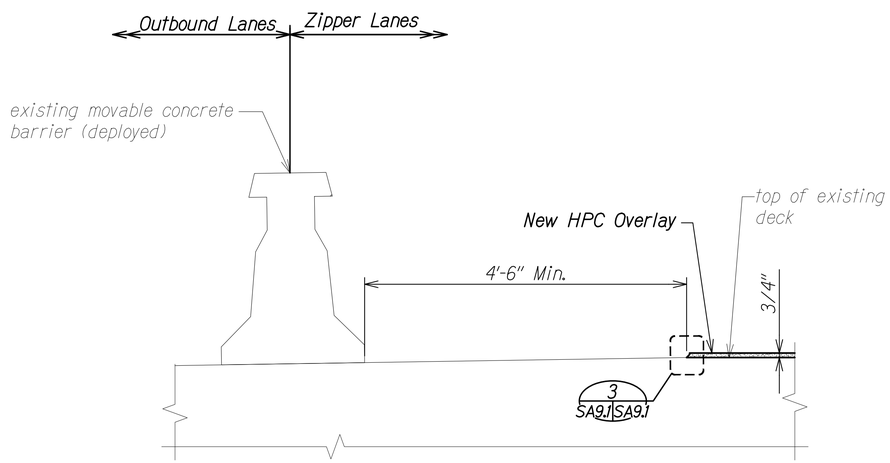

HPC LONGITUDINAL JOINT NEAR EXISTING MOVABLE CONCRETE BARRIER (DEPLOYED) — 1 / SA9.1 SA9.1

Scale: 1" = 1'-0"

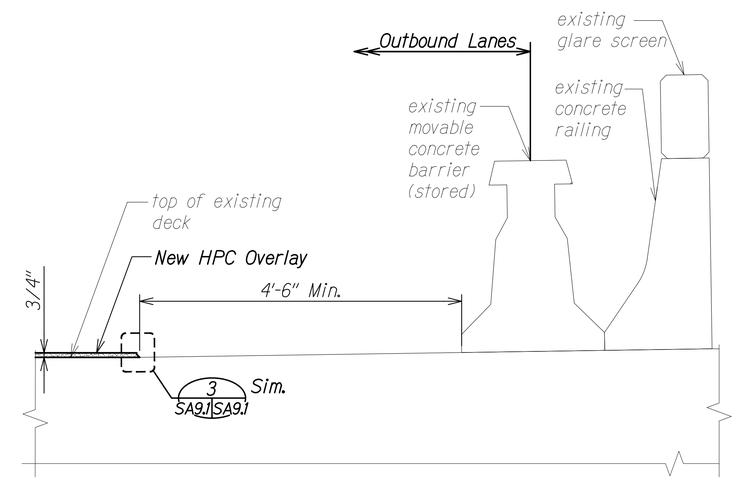

HPC LONGITUDINAL JOINT NEAR EXISTING MOVABLE CONCRETE BARRIER (STORED) — 2 / SA9.1 SA9.1

Scale: 1" = 1'-0"

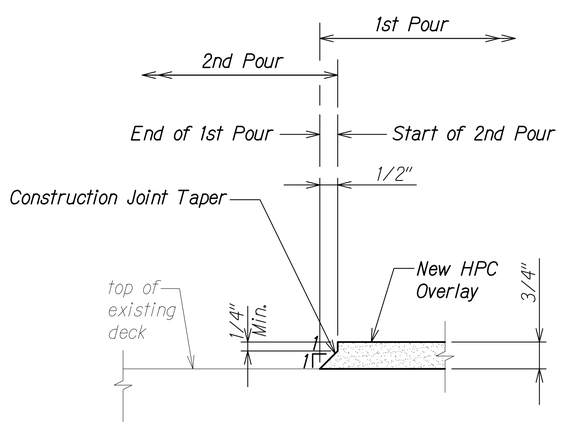

TYPICAL HPC CONSTRUCTION JOINT — 3 / SA9.1 SA9.1

Scale: NTS

NOTES:

1. The Contractor shall submit HPC paving and jointing plans for approval.
2. HPC construction joints shall be straight, neat and smooth. The longitudinal construction joints shall not be located within the wheel path.
3. Longitudinal construction joints shall be located a minimum of 4'-6" away from the stored and deployed positions of the Zipper barrier to not conflict with Zipper operations.
4. The Contractor shall re-establish the guideline prior to the nightly deployment of the Zipper barrier.

ERIC Y. MATSUMOTO
LICENSED PROFESSIONAL ENGINEER
NO. 10156-S
HAWAII, U.S.A.

THIS WORK WAS PREPARED BY ME OR UNDER MY SUPERVISION.

SIGNATURE — EXPIRATION DATE OF THE LICENSE 4-30-24

STATE OF HAWAII
DEPARTMENT OF TRANSPORTATION
HIGHWAYS DIVISION

PEARL CITY VIADUCT
HPC OVERLAY DETAILS

INTERSTATE ROUTE H-1 IMPROVEMENTS
Vicinity of Pearl City Viaduct to Waimalu Viaduct
Federal-Aid Project No. NH-H1-1(285)

Scale: As Noted — Date: May 2023

SHEET No. SA9.1 OF 9 SHEETS

ORIGINAL PLAN — NOTE BOOK No. — SURVEY PLOTTED BY — DRAWN BY — TRACED BY — DESIGNED BY — QUANTITIES BY — CHECKED BY — DATE

DRAWING NAME: Z:\OD ONGOING\22-001.8 PEARL CITY VIADUCT REPAIRS\01 CAD\05-23-23 100PCT\POYR-SA0901 POV OVERLAY JT DETAIL PLOT TIME: 05-24-23, 9:21 AM

FED. ROAD DIST. NO.	STATE	FEDERAL AID PROJ. NO.	FISCAL YEAR	SHEET NO.	TOTAL SHEETS
HAWAII	HAW.	NH-HI-1(285)	2023	245	287

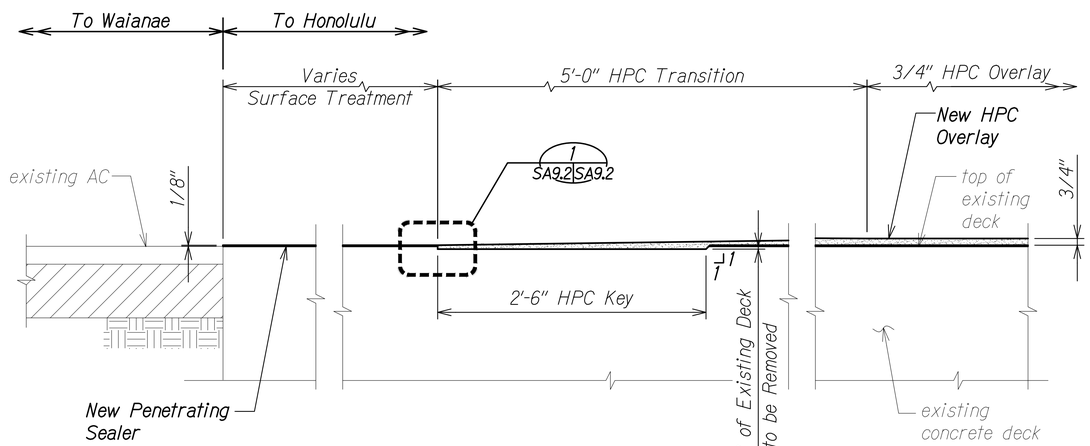

OVERLAY TRANSITION TO EXISTING AC WEARING SURFACE

Scale: 1 1/2" = 1'-0"

A
SA6.1 SA9.2

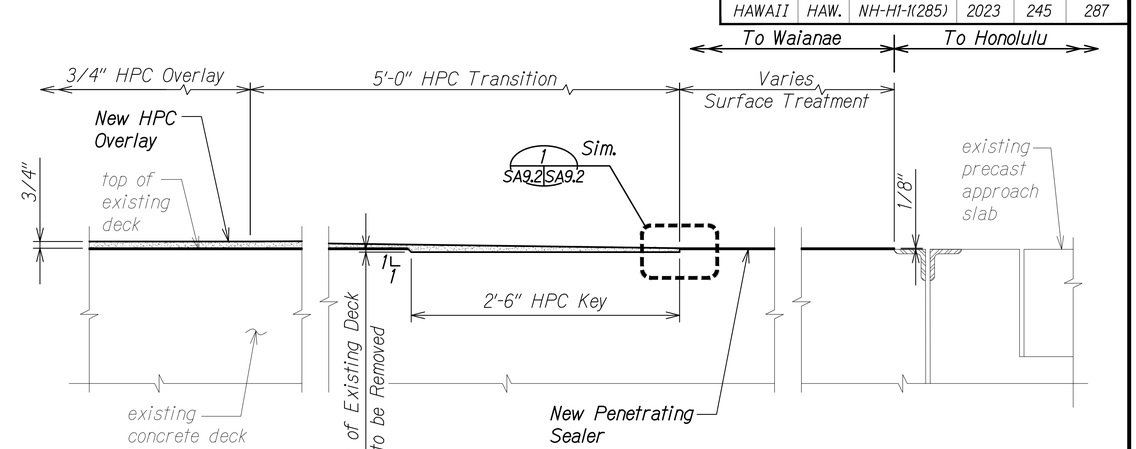

OVERLAY TRANSITION TO EXISTING APPROACH SLAB

Scale: 1 1/2" = 1'-0"

B
SA6.2 SA9.2

NOTES:

1. Anchors for steel L protective nosing at the expansion joint not shown for clarity.
2. The HPC transition shall be perpendicular to the base line.
3. The existing concrete substrate for the HPC key shall have a minimum amplitude of 1/8", a Concrete Surface Profile (CSP) of 7, or an approved equal.
4. The Contractor shall not feather edge the HPC.
5. The penetrating sealer and surface treatment shall not be placed on existing steel protective nosing.
6. The penetrating sealer and surface treatment shall lap the HPC overlay by a minimum of 1".
7. Each placement of HPC shall end at an expansion joint, unless otherwise approved by the Engineer. This shall be included in the paving plan.
8. Surface preparation of existing steel L protective nosing shall follow Manufacturer's recommendations prior to the placement of HPC.
9. For compression seal replacement, see SA10.1 to SA10.5.

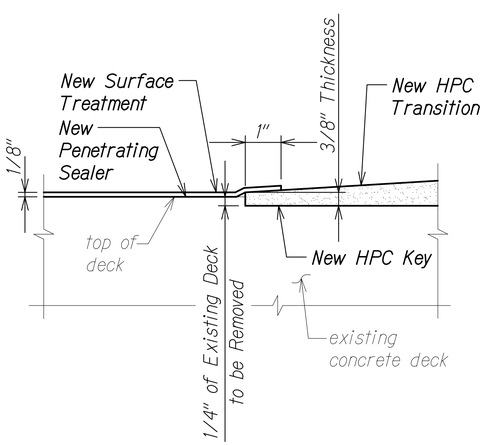

DETAIL

Scale: NTS

1
SA9.2 SA9.2

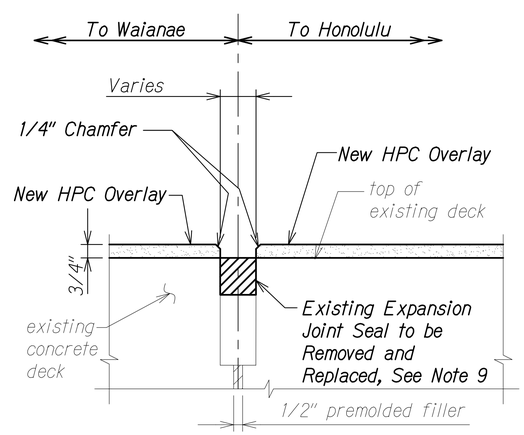

HPC AT EXPANSION JOINTS AT PIER NOS. 2 TO 46

Scale: 3" = 1'-0"

2
SA9.2 SA9.2

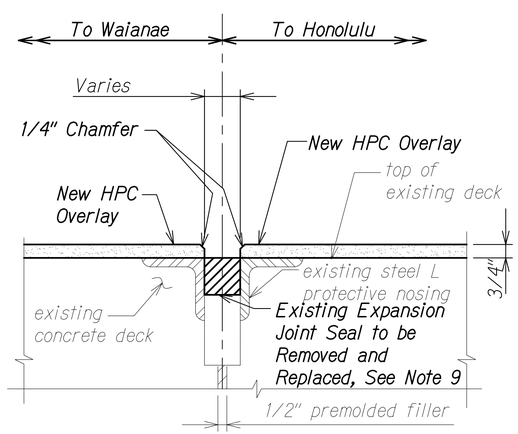

HPC AT EXPANSION JOINTS AT PIER NOS. 47 TO 59

Scale: 3" = 1'-0"

3
SA9.2 SA9.2

ERIC Y. MATSUMOTO
LICENSED PROFESSIONAL ENGINEER
NO. 10156-S
HAWAII, U.S.A.

THIS WORK WAS PREPARED BY ME OR UNDER MY SUPERVISION.

SIGNATURE — EXPIRATION DATE OF THE LICENSE 4-30-24

STATE OF HAWAII
DEPARTMENT OF TRANSPORTATION
HIGHWAYS DIVISION

PEARL CITY VIADUCT
HPC OVERLAY DETAILS

INTERSTATE ROUTE H-1 IMPROVEMENTS
Vicinity of Pearl City Viaduct to Waimalu Viaduct
Federal-Aid Project No. NH-H1-1(285)

Scale: As Noted — Date: May 2023

SHEET No. SA9.2 OF 9 SHEETS

ORIGINAL PLAN | SURVEY PLOTTED BY | DRAWN BY | TRACED BY | DESIGNED BY | QUANTITIES BY | CHECKED BY | DATE | NOTE BOOK No.

DRAWING NAME: Z:\OD ONGOING\22-001 & PEARL CITY VIADUCT REPAIRS\01 CAD\05-25-23 IDOPCT\PCVR-SA0902 POV OVERLAY JT DETAIL.DWG PLOT TIME: 05-24-23, 3:26 PM

FED. ROAD DIST. NO.	STATE	FEDERAL AID PROJ., NO.,	FISCAL YEAR	SHEET NO.	TOTAL SHEETS
HAWAII	HAW.	NH-HI-1(285)	2023	ADD. 246	287

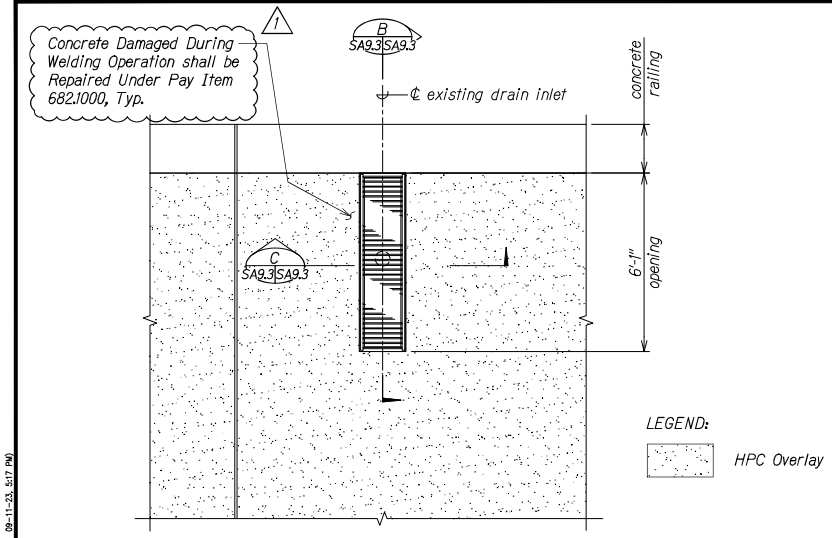

PLAN - IB TYPE "PC-1" DECK DRAIN INLET (A SA9.3 SA9.3)

Scale: 1/2" = 1'-0"

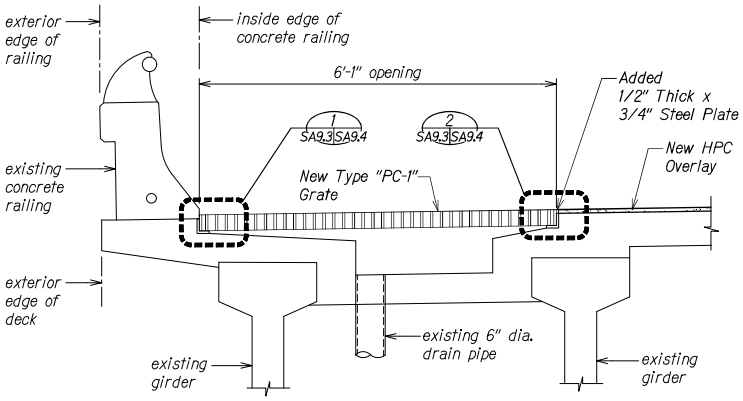

SECTION (B SA9.3 SA9.3)

Scale: 1" = 1'-0"

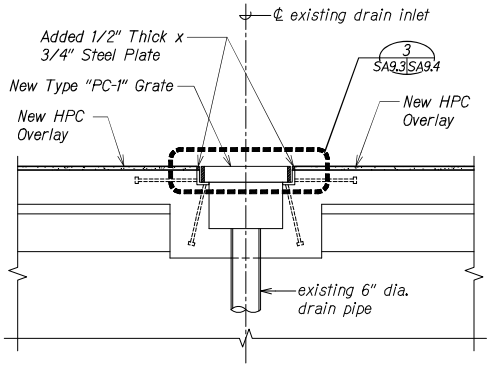

SECTION (C SA9.3 SA9.3)

Scale: 1" = 1'-0"

EXISTING GRATE REMOVAL NOTE:

The Contractor shall anticipate the existing steel grate to be welded to the existing frame. Removal of the grate shall be performed in a manner that does not damage the existing frame assembly. The Contractor shall submit a detailed removal plan of the grate to the EOR for review and approval prior to the start of work.

DATE	REVISION
9/11/23	1 Added Note

ERIC Y. MATSUMOTO LICENSED PROFESSIONAL ENGINEER NO. 10156-S HAWAII, U.S.A.

THIS WORK WAS PREPARED BY ME OR UNDER MY SUPERVISION.

SIGNATURE — EXPIRATION DATE OF THE LICENSE 4-30-24

STATE OF HAWAII
DEPARTMENT OF TRANSPORTATION
HIGHWAYS DIVISION

PEARL CITY VIADUCT
IB DECK DRAIN DETAILS

INTERSTATE ROUTE H-1 IMPROVEMENTS
Vicinity of Pearl City Viaduct to Waimalu Viaduct
Federal-Aid Project No. NH-HI-1(285)

Scale: As Noted — Date: May 2023

SHEET No. SA9.3 OF 9 SHEETS

ADD. 246

ORIGINAL PLAN | NOTE BOOK No. | HISTORY: PLOTTED BY DATE, DRAWN BY, TRACED BY, DESIGNED BY, QUANTITIES BY, CHECKED BY

DRAWING NAME: Z:\00 ONGOING\Z2-001.5 PEARL CITY VIADUCT REPAIRS\01 CAD\02-11-23 100PCT ADD\1 PC\R-SA0903 PCV TYP DECK REPAIR SECT ADD1.DWG PLOT TIME: (09-11-23, 5:17 PM)

FED. ROAD DIST. NO.	STATE	FEDERAL AID PROJ. NO.	FISCAL YEAR	SHEET NO.	TOTAL SHEETS
HAWAII	HAW.	NH-HI-1(285)	2023	247	287

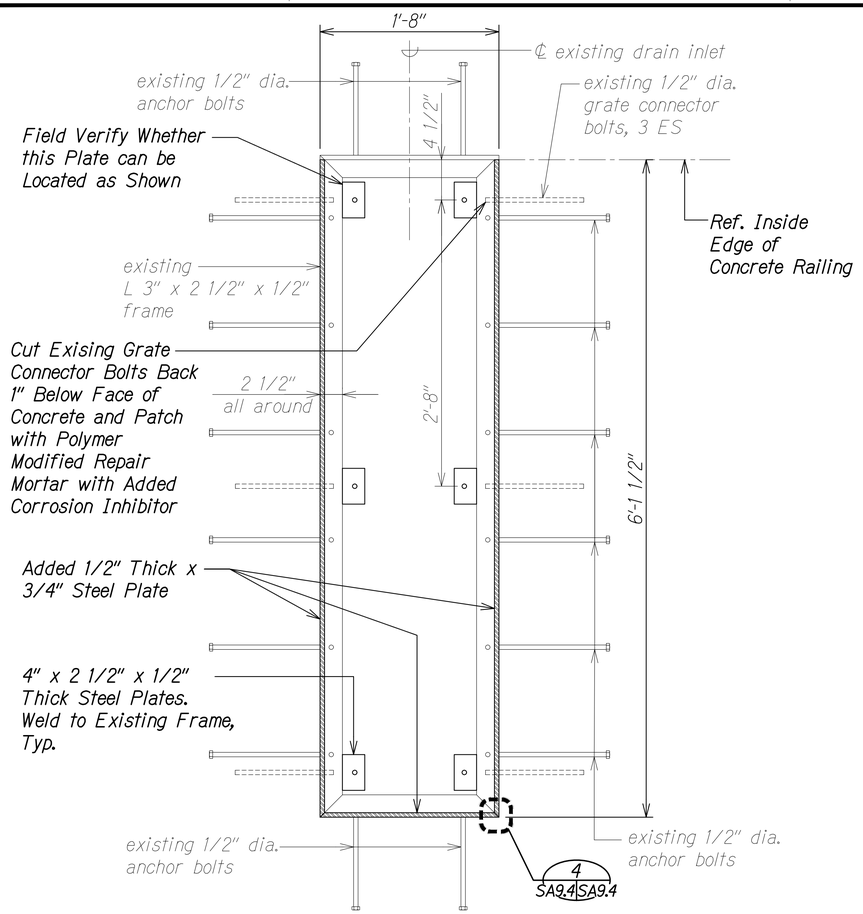

TYPE "PC-1" DI FRAME PLAN (A, SA9.4 | SA9.4)
Scale: 1 1/2" = 1'-0"

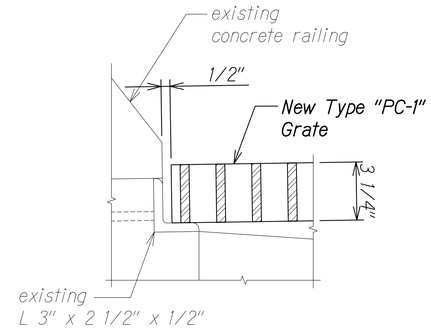

DETAIL (1, SA9.3 | SA9.4)
Scale: 3" = 1'-0"

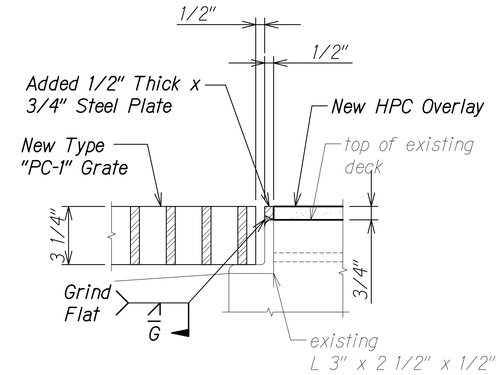

DETAIL (2, SA9.3 | SA9.4)
Scale: 3" = 1'-0"

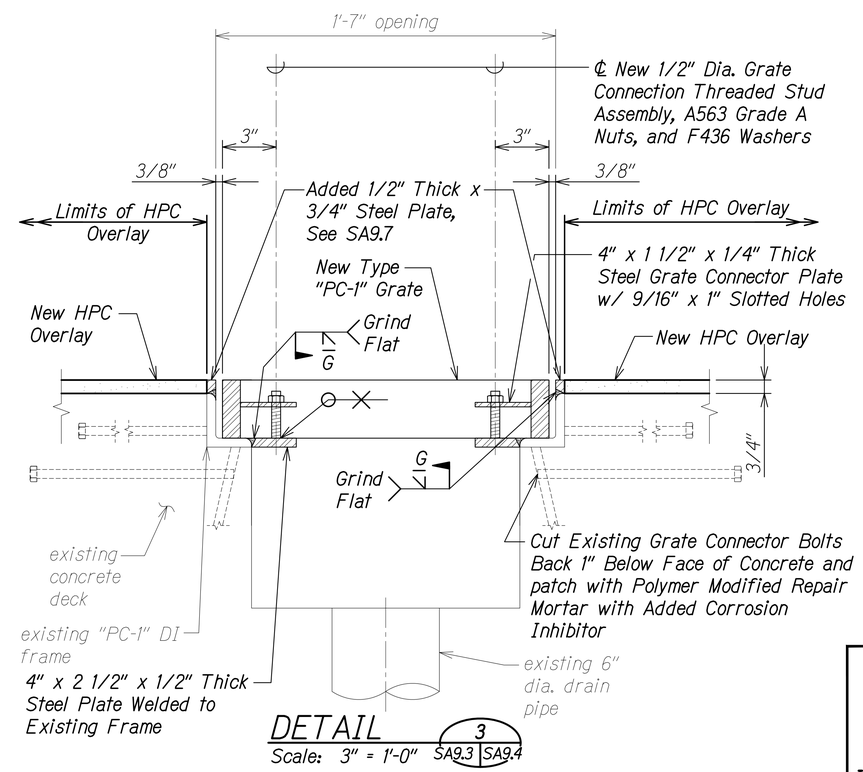

DETAIL (3, SA9.3 | SA9.4)
Scale: 3" = 1'-0"

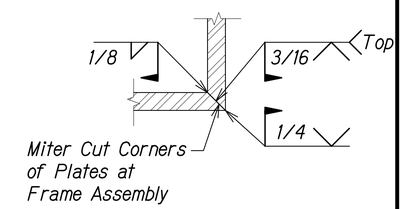

DETAIL (4, SA9.4 | SA9.4)
Scale: 6" = 1'-0"

FRAME MODIFICATION NOTES:

1. These notes shall apply to all details within the SA9 series, unless otherwise noted.
2. New steel plates shall be delivered with threaded connector studs pre-welded to the plate. All new steel plate assemblies shall be delivered hot-dip zinc galvanized, after fabrication, in accordance with ASTM A123.
3. Bevel/Prepare edge of plate as required by the weld details.
4. Remove zinc galvanizing from new steel plate and existing steel angle within 1/2" from the welded edge.
5. Weld new plate to existing angle. Grind welds flat. Remove all weld flux residue and weld splatter.
6. Clean welded surface using water blasting (min. 3,000 psi).
7. Prepare surface of steel in accordance with SSPC-SP16 Brush-Off Blast Cleaning and SSPC-SP1 Solvent Cleaning. Ensure that brush-off blast cleaning does not damage existing zinc galvanizing to remain.
8. Repair all welded surfaces and damaged galvanized zinc using a zinc-based solder in strict accordance with ASTM A780 paying particular attention to preheat temperature, wire brushing, and uniform deposition of zinc requirements. The minimum average zinc thickness shall be 3.9 mils. The average thickness shall be based on a minimum of five measurements on a specimen.
9. Clean out exist. drain pipes. Work shall be incidental to the respective pay items as shown on the proposal schedule.

ORIGINAL PLAN	SURVEY PLOTTED BY	DATE
	DRAWN BY	
NOTE BOOK	TRACED BY	
	DESIGNED BY	
	QUANTITIES BY	
No.	CHECKED BY	

ERIC Y. MATSUMOTO
LICENSED PROFESSIONAL ENGINEER
NO. 10156-S
HAWAII, U.S.A.

THIS WORK WAS PREPARED BY ME OR UNDER MY SUPERVISION.

SIGNATURE — EXPIRATION DATE OF THE LICENSE 4-30-24

STATE OF HAWAII
DEPARTMENT OF TRANSPORTATION
HIGHWAYS DIVISION

PEARL CITY VIADUCT
IB DI FRAME DETAILS

INTERSTATE ROUTE H-1 IMPROVEMENTS
Vicinity of Pearl City Viaduct to Waimalu Viaduct
Federal-Aid Project No. NH-HI-1(285)

Scale: As Noted — Date: May 2023

SHEET No. SA9.4 OF 9 SHEETS

DRAWING NAME: Z:\00 ONGOING\22-0018 PEARL CITY VIADUCT REPAIRS\01 CAD\CS-23-23 100PCT\PCVR-SA0904 PVC DRAIN GRATE.DWG PLOT TIME: (CS-24-23, 9:23 AM)

FED. ROAD DIST. NO.	STATE	FEDERAL AID PROJ. NO.	FISCAL YEAR	SHEET NO.	TOTAL SHEETS
HAWAII	HAW.	NH-HI-1(285)	2023	248	287

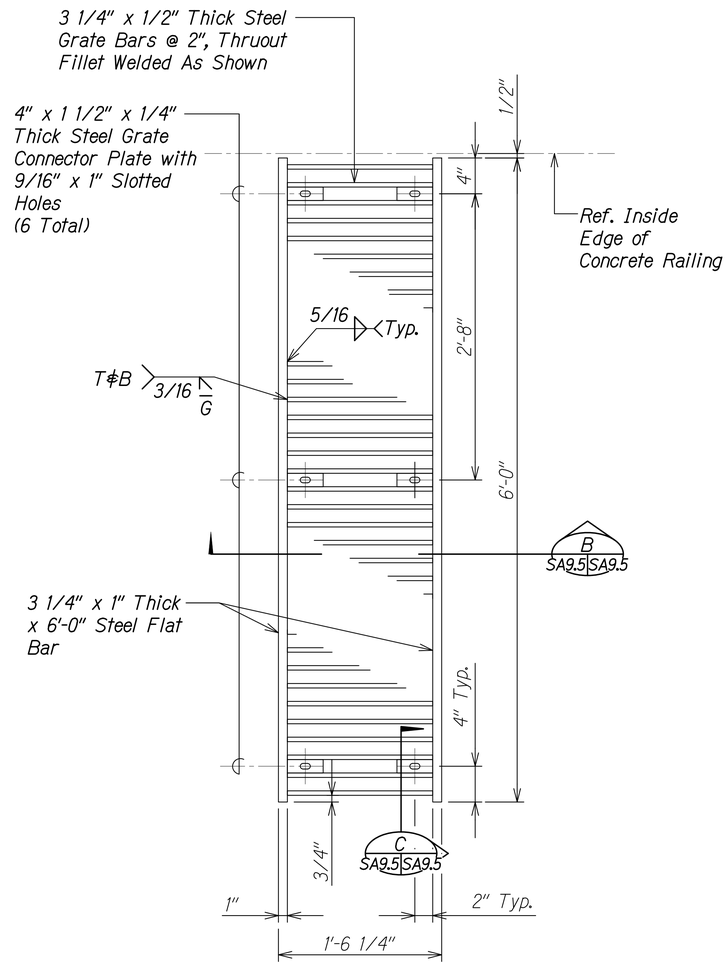

NEW TYPE "PC-1" GRATE PLAN (A / SA9.5 SA9.5)

Scale: 1 1/2" = 1'-0"

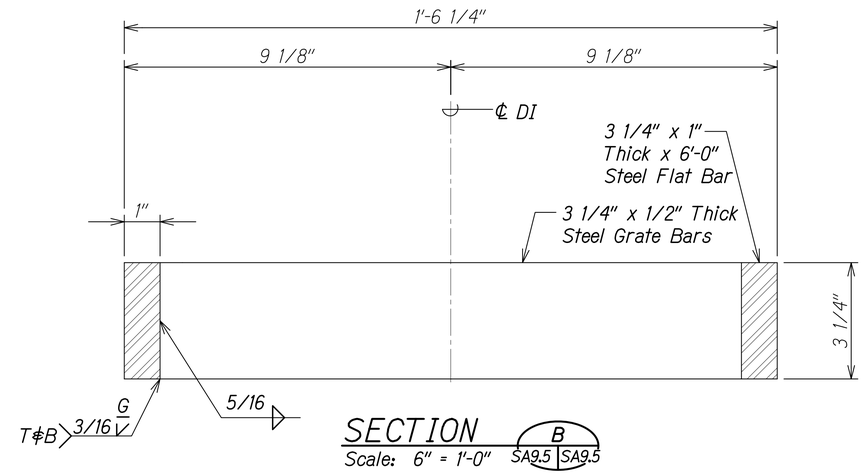

SECTION (B / SA9.5 SA9.5)

Scale: 6" = 1'-0"

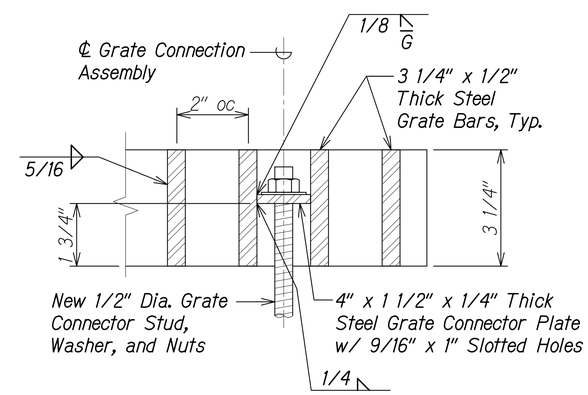

SECTION (C / SA9.5 SA9.5)

Scale: 6" = 1'-0"

NOTES:

1. Shop drawings for grating shall be submitted to the Engineer for acceptance.
2. Prior to preparation of shop drawings, the Contractor shall field measure the existing frame opening size for every drain inlet. Submit any discrepancies to the Engineer for review.
3. Entire grating assemblage shall be hot-dip zinc galvanized in accordance with ASTM A123.
4. All loose hardware, including bolts, nuts, and washer shall be hot-dip zinc galvanized in accordance with ASTM A153.

ORIGINAL PLAN	SURVEY PLOTTED BY	DATE
	DRAWN BY	
NOTE BOOK	TRACED BY	
	DESIGNED BY	
No.	QUANTITIES BY	
	CHECKED BY	

DRAWING NAME: Z:\OD ORIGINAL\22-001.8 PEARL CITY VIADUCT REPAIRS\01 CAD\05-23-23 10GRC1\PCVR-SA0904 PVC DRAIN GRATE.DWG PLOT TIME: 05-24-23, 9:23 AM

ERIC Y. MATSUMOTO
LICENSED PROFESSIONAL ENGINEER
NO. 10156-S
HAWAII, U.S.A.

THIS WORK WAS PREPARED BY ME OR UNDER MY SUPERVISION.

SIGNATURE — EXPIRATION DATE OF THE LICENSE 4-30-24

STATE OF HAWAII
DEPARTMENT OF TRANSPORTATION
HIGHWAYS DIVISION

PEARL CITY VIADUCT
IB DI GRATE DETAILS

INTERSTATE ROUTE H-1 IMPROVEMENTS
Vicinity of Pearl City Viaduct to Waimalu Viaduct
Federal-Aid Project No. NH-HI-1(285)

Scale: As Noted Date: May 2023

SHEET No. SA9.5 OF 9 SHEETS

FED. ROAD DIST. NO.	STATE	FEDERAL AID PROJ. NO.	FISCAL YEAR	SHEET NO.	TOTAL SHEETS
HAWAII	HAW.	NH-HI-1(285)	2023	ADD. 249	287

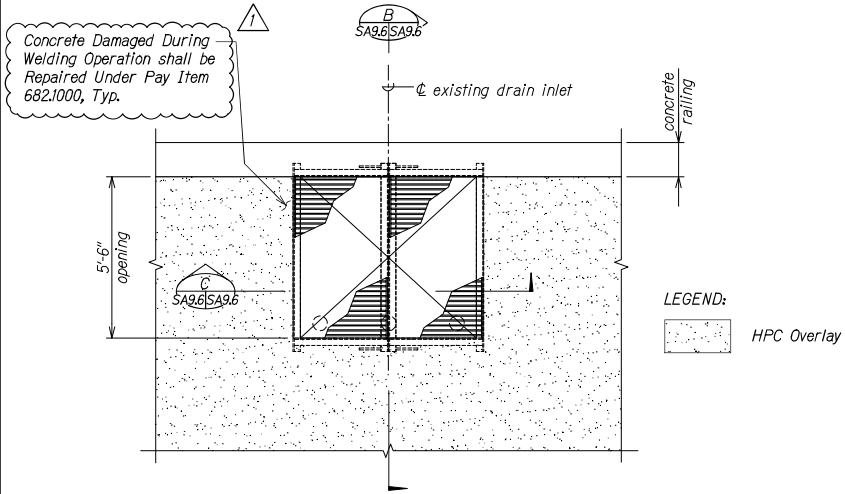

PLAN - OB TYPE "B4-P" DECK DRAIN INLET (A SA9.6 SA9.6)

Scale: 1/2" = 1'-0"

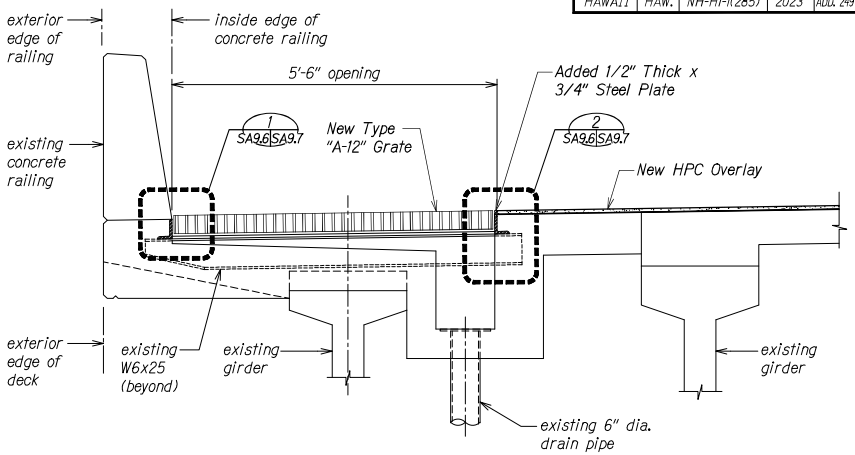

SECTION (B SA9.6 SA9.6)

Scale: 1" = 1'-0"

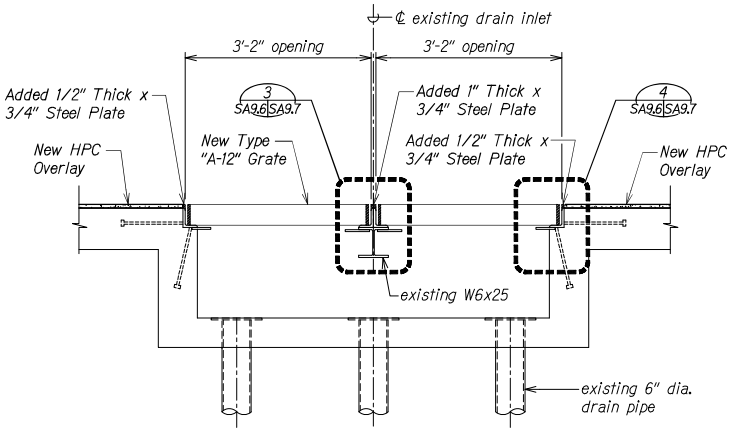

SECTION (C SA9.6 SA9.6)

Scale: 1" = 1'-0"

DATE	REVISION
9/11/23	1 Added Note

ERIC Y. MATSUMOTO
LICENSED PROFESSIONAL ENGINEER
NO. 10156-S
HAWAII, U.S.A.

THIS WORK WAS PREPARED BY ME OR UNDER MY SUPERVISION.

SIGNATURE — EXPIRATION DATE OF THE LICENSE 4-30-24

STATE OF HAWAII
DEPARTMENT OF TRANSPORTATION
HIGHWAYS DIVISION

PEARL CITY VIADUCT
OB DECK DRAIN DETAILS

INTERSTATE ROUTE H-1 IMPROVEMENTS
Vicinity of Pearl City Viaduct to Waimalu Viaduct
Federal-Aid Project No. NH-HI-1(285)

Scale: As Noted — Date: May 2023

SHEET No. SA9.6 OF 9 SHEETS

ADD. 249

ORIGINAL PLAN — NOTE BOOK No. — HISTORY: PLOTTED BY — DRAWN BY — TRACED BY — DESIGNED BY — QUANTITIES BY — CHECKED BY — DATE

DRAWING NAME: Z:\00 ONGOING\Z2-001.3 PEARL CITY VIADUCT REPAIRS\01 CAD\Q-11-23 100PCT ADD\1 PCVR-SA0966 PCV TYP DECK REPAIR SECT ADD1.DWG PLOT TIME: (9-11-23, 5:18 PM)

FED. ROAD DIST. NO.	STATE	FEDERAL AID PROJ. NO.	FISCAL YEAR	SHEET NO.	TOTAL SHEETS
HAWAII	HAW.	NH-HI-1(285)	2023	250	287

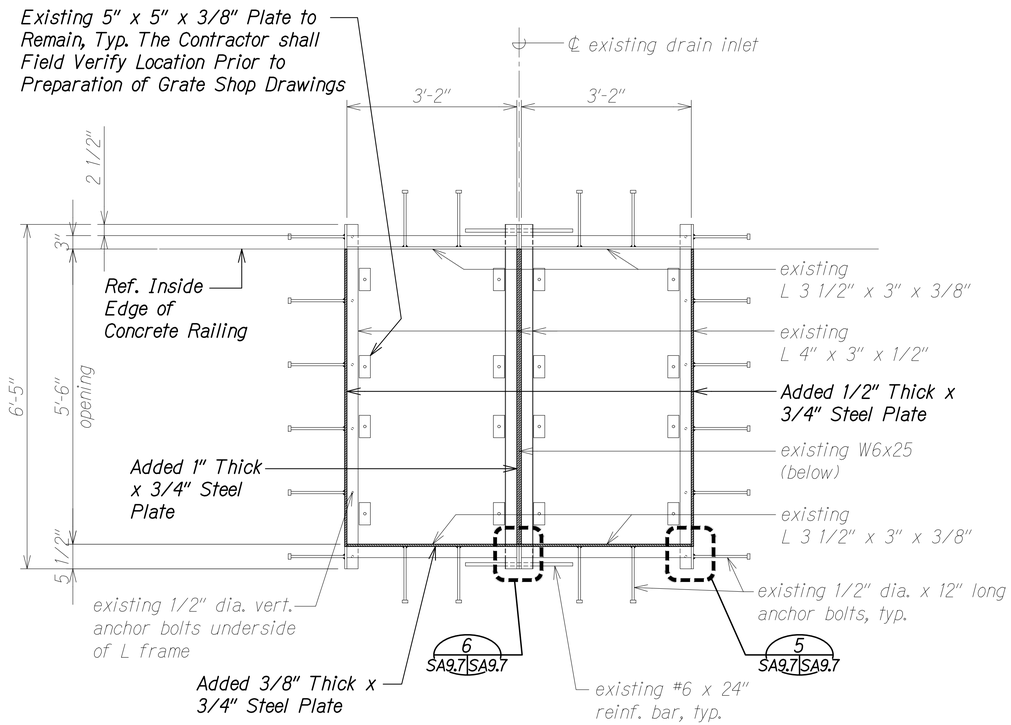

TYPE "B4-P" DI FRAME PLAN (A SA9.7 SA9.7)
Scale: 3/4" = 1'-0"

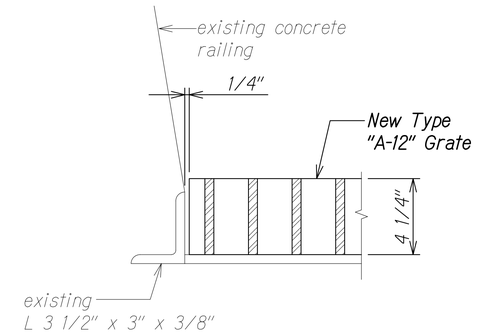

DETAIL (1 SA9.6 SA9.7)
Scale: 3" = 1'-0"

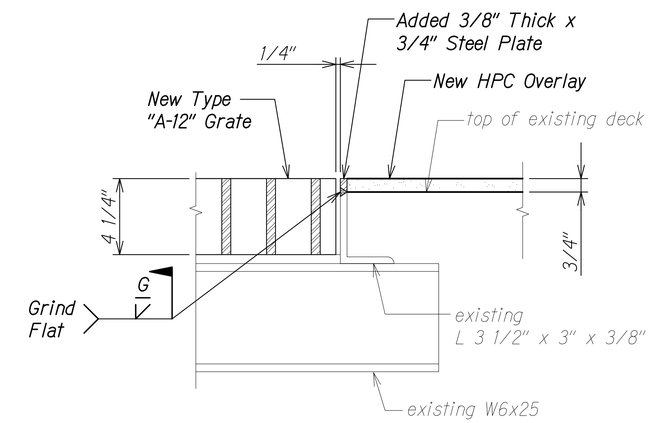

DETAIL (2 SA9.6 SA9.7)
Scale: 3" = 1'-0"

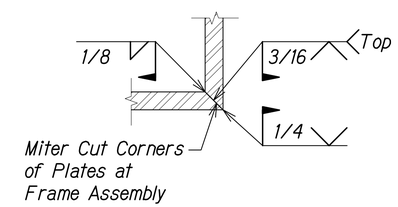

DETAIL (5 SA9.7 SA9.7)
Scale: 6" = 1'-0"

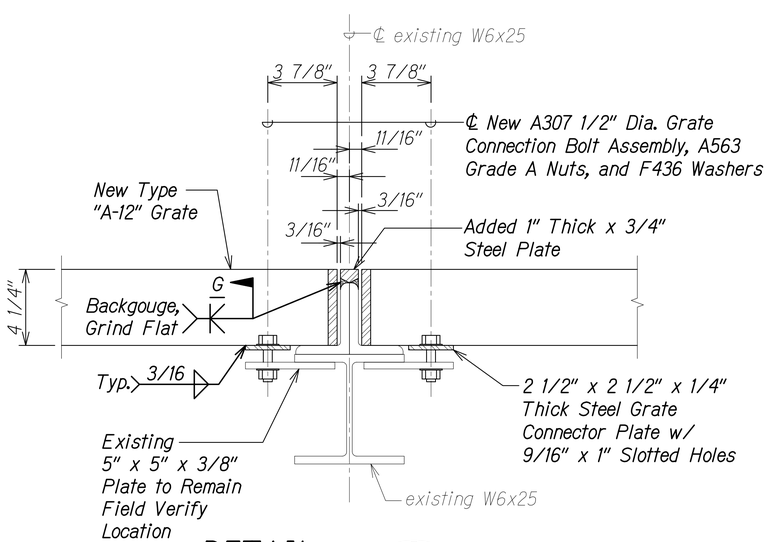

DETAIL (3 SA9.6 SA9.7)
Scale: 3" = 1'-0"

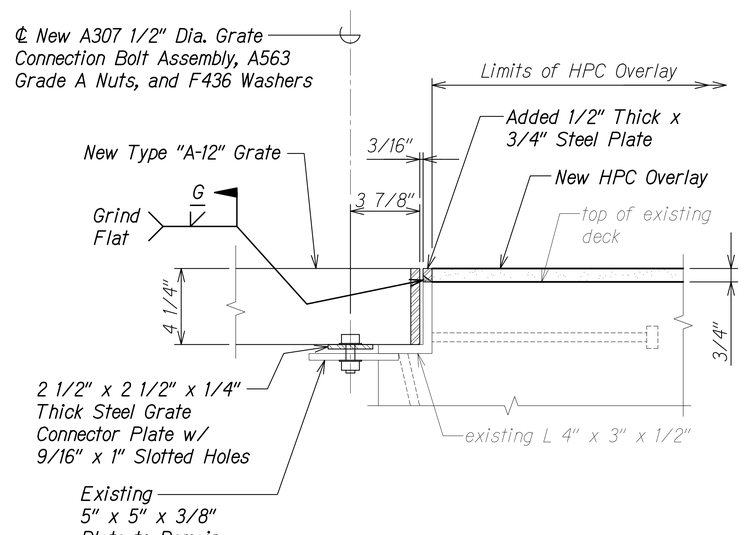

DETAIL (4 SA9.6 SA9.7)
Scale: 3" = 1'-0"

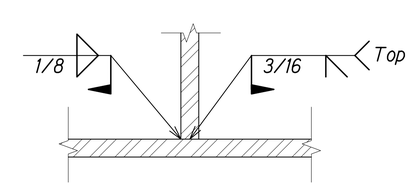

DETAIL (6 SA9.7 SA9.7)
Scale: 6" = 1'-0"

ERIC Y. MATSUMOTO
LICENSED PROFESSIONAL ENGINEER
NO. 10156-S
HAWAII, U.S.A.

THIS WORK WAS PREPARED BY ME OR UNDER MY SUPERVISION.

SIGNATURE — EXPIRATION DATE OF THE LICENSE 4-30-24

STATE OF HAWAII
DEPARTMENT OF TRANSPORTATION
HIGHWAYS DIVISION

PEARL CITY VIADUCT
OB DI FRAME DETAILS

INTERSTATE ROUTE H-1 IMPROVEMENTS
Vicinity of Pearl City Viaduct to Waimalu Viaduct
Federal-Aid Project No. NH-HI-1(285)

Scale: As Noted — Date: May 2023

SHEET No. SA9.7 OF 9 SHEETS

ORIGINAL PLAN | SURVEY PLOTTED BY | DRAWN BY | TRACED BY | DESIGNED BY | QUANTITIES BY | CHECKED BY | DATE
NOTE BOOK No.

DRAWING NAME: Z:\OD ONGOING\22-001.8 PEARL CITY VIADUCT REPAIRS\01 CAD\05-23-23 100PCT\POYR-SA9907 PKC DRAIN GRATE.DWG PLOT TIME: 05-24-23, 9:25 AM

FED. ROAD DIST. NO.	STATE	FEDERAL AID PROJ. NO.	FISCAL YEAR	SHEET NO.	TOTAL SHEETS
HAWAII	HAW.	NH-HI-1(285)	2023	251	287

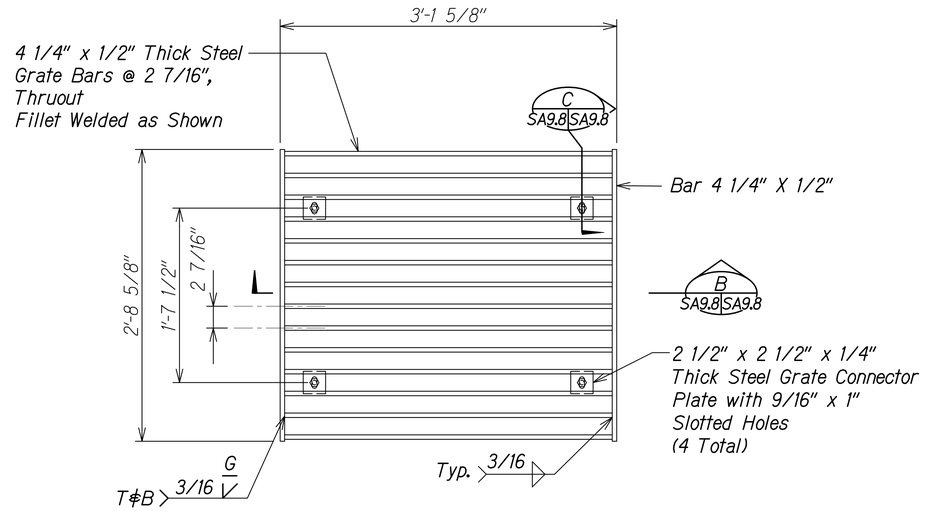

NEW TYPE "A-12" GRATE PLAN (4 REQUIRED PER DRAIN INLET)

Scale: 1 1/2" = 1'-0"

A SA9.8 SA9.8

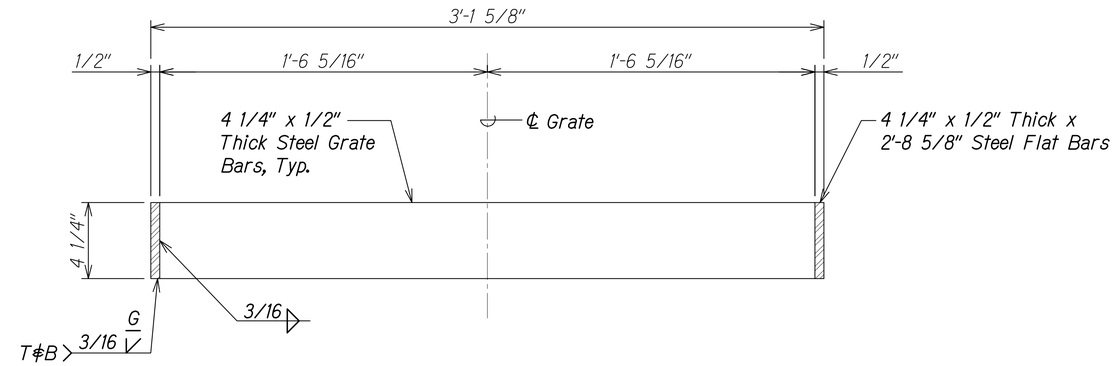

SECTION

Scale: 3" = 1'-0"

B SA9.8 SA9.8

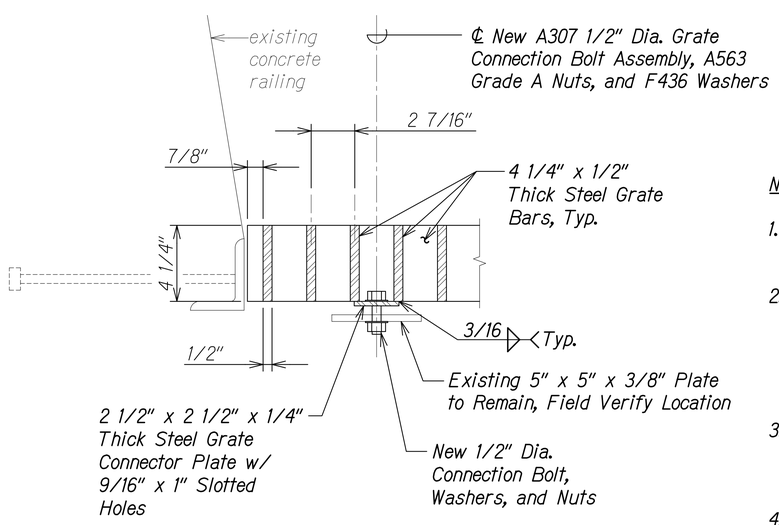

SECTION

Scale: 3" = 1'-0"

C SA9.8 SA9.8

NOTES:

1. Shop drawings for grating shall be submitted to the Engineer for acceptance.
2. Prior to preparation of shop drawings, the Contractor shall field measure the existing frame opening size for every drain inlet. Submit any discrepancies to the Engineer for review.
3. Entire grating assemblage shall be hot-dip zinc galvanized in accordance with ASTM A123.
4. All loose hardware, including bolts, nuts, and washer shall be hot-dip zinc galvanized in accordance with ASTM A153.

ERIC Y. MATSUMOTO
LICENSED PROFESSIONAL ENGINEER
NO. 10156-S
HAWAII, U.S.A.

THIS WORK WAS PREPARED BY ME OR UNDER MY SUPERVISION.

SIGNATURE — EXPIRATION DATE OF THE LICENSE 4-30-24

STATE OF HAWAII
DEPARTMENT OF TRANSPORTATION
HIGHWAYS DIVISION

PEARL CITY VIADUCT
OB DI GRATE DETAILS

INTERSTATE ROUTE H-1 IMPROVEMENTS
Vicinity of Pearl City Viaduct to Waimalu Viaduct
Federal-Aid Project No. NH-HI-1(285)

Scale: As Noted — Date: May 2023

SHEET No. SA9.8 OF 9 SHEETS

ORIGINAL PLAN	SURVEY PLOTTED BY	DATE
	DRAWN BY	
NOTE BOOK	TRACED BY	
	DESIGNED BY	
No.	QUANTITIES BY	
	CHECKED BY	

DRAWING NAME: Z:\OD ONGOING\22-001.8 PEARL CITY VIADUCT REPAIRS\01 CAD\05-23-23 1OBPC1\PCVR-SA0907 PVC DRAIN GRATE.DWG PLOT TIME: 05-24-23, 9:25 AM

FED. ROAD DIST. NO.	STATE	FEDERAL AID PROJ. NO.	FISCAL YEAR	SHEET NO.	TOTAL SHEETS
HAWAII	HAW.	NH-HI-1(285)	2023	252	287

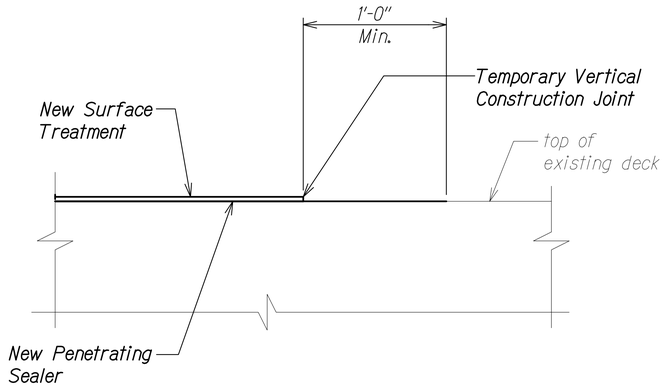

PENETRATING SEALER AND SURFACE TREATMENT AT CONSTRUCTION JOINT

Scale: 6" = 1'-0"

1 SA9.9 | SA9.9

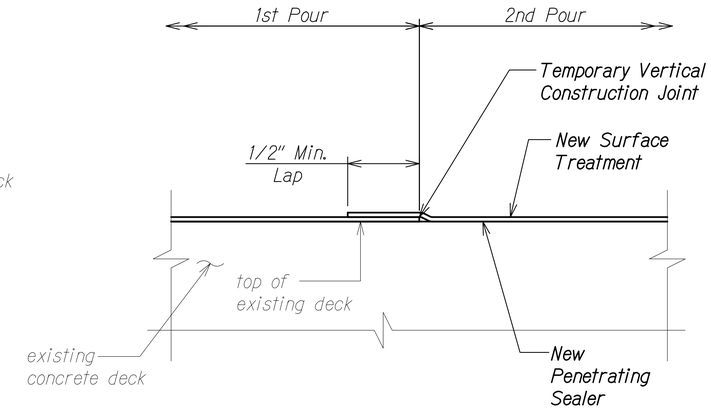

SURFACE TREATMENT CONSTRUCTION JOINT

Scale: 6" = 1'-0"

2 SA9.9 | SA9.9

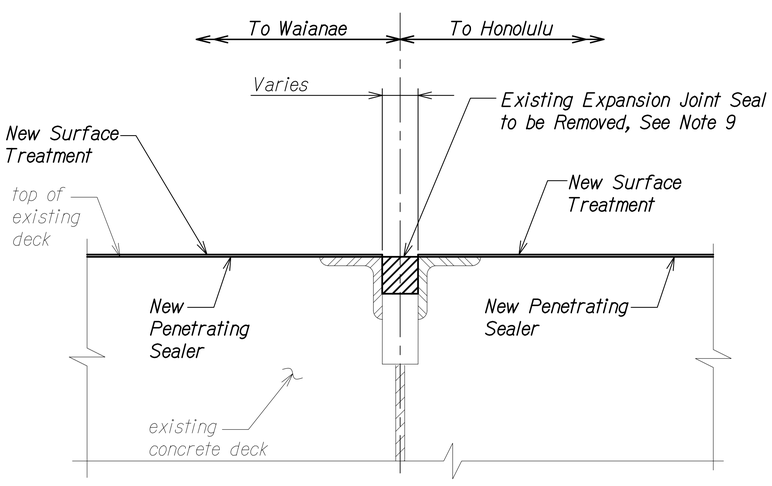

NOTE:

Anchors not shown for clarity.

SURFACE TREATMENT AND PENETRATING SEALER AT PIER NO. 61 (IB ONLY)

Scale: 3" = 1'-0"

3 SA9.9 | SA9.9

NOTES:

1. The Contractor shall submit surface treatment paving and jointing plans for approval.
2. Penetrating sealer construction joints shall be straight, neat, and smooth. Joints shall not be reflected in surface treatment.
3. High and low spots in penetrating sealer shall be corrected before placement of surface treatment, such that it is not reflected in the surface treatment.
4. Smooth spots in penetrating sealer shall be corrected to ensure proper bonding of surface treatment. Smooth spots are due to an insufficient quantity of topping aggregate and do not provide skid resistance.
5. Construction joints between penetrating sealer and surface treatment shall be staggered.
6. Surface treatment transverse construction joints shall start and end at an expansion joint, unless approved by the Engineer. This shall be included in the paving plan.
7. Surface treatment lap shall be located at lane striping locations and not in the vehicle wheel path.
8. Surface treatment construction joints shall be straight, neat and smooth.
9. For compression seal replacement, see SA10.1 to SA10.5.
10. Surface preparation of existing steel L protective nosing shall follow Manufacturer's recommendation prior to the placement of the penetrating sealer.

ERIC Y. MATSUMOTO
LICENSED PROFESSIONAL ENGINEER
NO. 10156-S
HAWAII, U.S.A.

THIS WORK WAS PREPARED BY ME OR UNDER MY SUPERVISION.

SIGNATURE — EXPIRATION DATE OF THE LICENSE 4-30-24

STATE OF HAWAII
DEPARTMENT OF TRANSPORTATION
HIGHWAYS DIVISION

PEARL CITY VIADUCT - SURFACE TREATMENT AND PENETRATING SEALER DETAILS

INTERSTATE ROUTE H-1 IMPROVEMENTS
Vicinity of Pearl City Viaduct to Waimalu Viaduct
Federal-Aid Project No. NH-HI-1(285)

Scale: As Noted — Date: May 2023

SHEET No. SA9.9 OF 9 SHEETS

252

ORIGINAL PLAN | SURVEY PLOTTED BY | DRAWN BY | TRACED BY | DESIGNED BY | QUANTITIES BY | CHECKED BY | DATE
NOTE BOOK No.

DRAWING NAME: Z:\00 ORIGINAL\22-001.8 PEARL CITY VIADUCT REPAIRS\01 CAD\05-23-23 10\PRCY\PCVR-SA0909 PCV OVERLAY SURF TREAT DET.DWG PLOT TIME: 05-24-23 9:26 AM

FED. ROAD DIST. NO.	STATE	FEDERAL AID PROJ. NO.	FISCAL YEAR	SHEET NO.	TOTAL SHEETS
HAWAII	HAW.	NH-H1-1(285)	2023	253	287

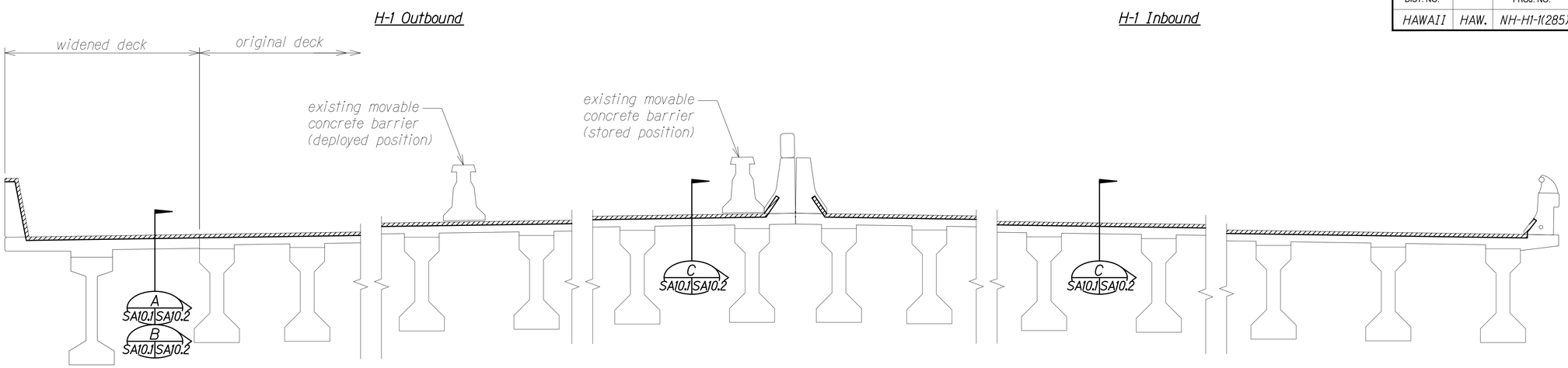

NORMAL DECK SECTION AT EXISTING EXPANSION JOINT SEAL AT PIER NOS. 2 TO 46

Scale: 3/8" = 1'-0"

A SA10.1 SA10.1

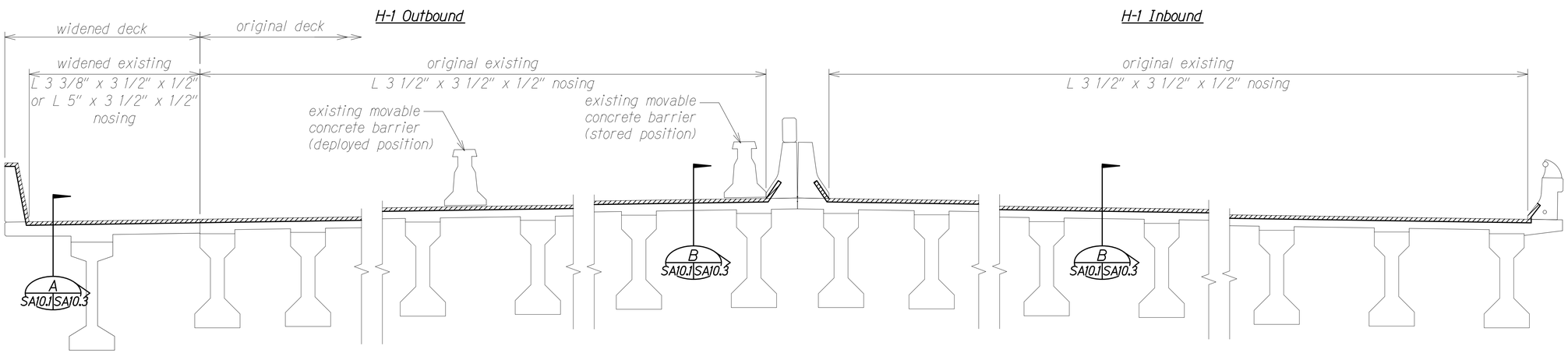

NORMAL DECK SECTION AT EXISTING EXPANSION JOINT SEAL AT PIER NOS. 47 TO 59, 61 (IB ONLY) AND ABUTMENT NO. 2

Scale: 3/8" = 1'-0"

B SA10.1 SA10.1

LEGEND:

Existing Expansion Joint Compression Seal to be Removed and Replaced, See SA10.4 and SA10.5

ERIC Y. MATSUMOTO
LICENSED PROFESSIONAL ENGINEER
NO. 10156-S
HAWAII, U.S.A.

THIS WORK WAS PREPARED BY ME OR UNDER MY SUPERVISION.

SIGNATURE — EXPIRATION DATE OF THE LICENSE 4-30-24

STATE OF HAWAII
DEPARTMENT OF TRANSPORTATION
HIGHWAYS DIVISION

PEARL CITY VIADUCT - EXISTING EXPANSION JOINT SEAL DETAILS

INTERSTATE ROUTE H-1 IMPROVEMENTS
Vicinity of Pearl City Viaduct to Waimalu Viaduct
Federal-Aid Project No. NH-H1-1(285)

Scale: As Noted — Date: May 2023

SHEET No. SA10.1 OF 5 SHEETS

253

ORIGINAL PLAN	SURVEY PLOTTED BY	DATE
	DRAWN BY	" " " "
NOTE BOOK	TRACED BY	
	DESIGNED BY	
No.	QUANTITIES BY	
	CHECKED BY	

DRAWING NAME: Z:\OD ONGOING\22-0018 PEARL CITY VIADUCT REPAIRS\01 CAD\05-23-23 100PCT\PCVR-SA1001 PCV EXP JOINT SECT.DWG PLOT TIME: 05-24-23, 9:26 AM

FED. ROAD DIST. NO.	STATE	FEDERAL AID PROJ. NO.	FISCAL YEAR	SHEET NO.	TOTAL SHEETS
HAWAII	HAW.	NH-H1-1(285)	2023	254	287

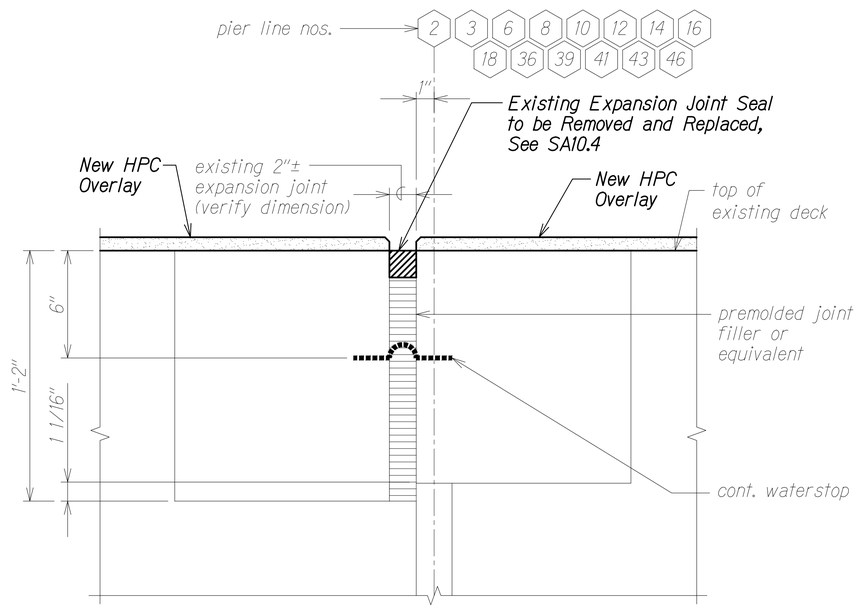

EXISTING DECK EXPANSION JOINT AT WIDENING

Scale: 3" = 1'-0"

A SA10.1 SA10.2

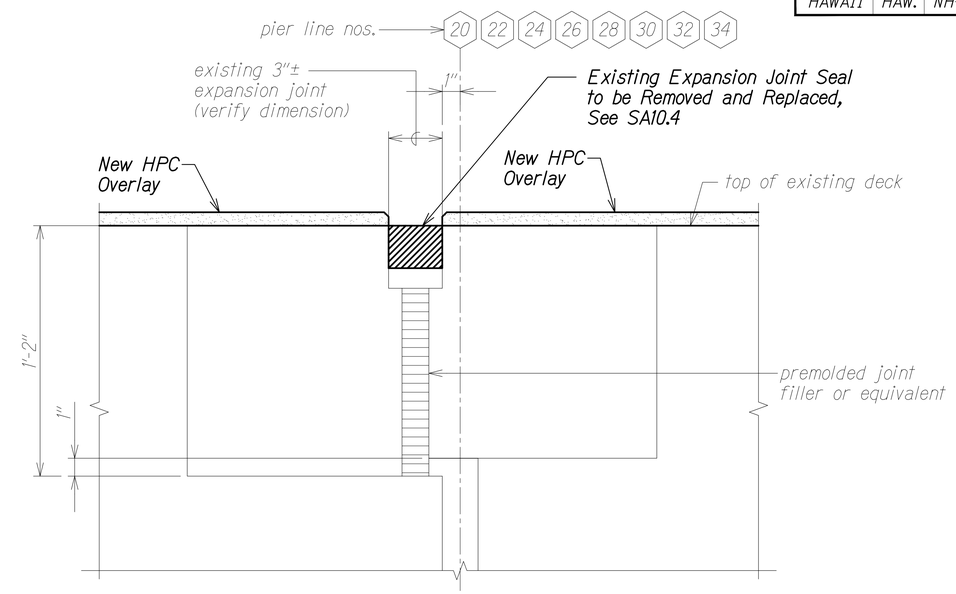

EXISTING DECK EXPANSION JOINT AT WIDENING

Scale: 3" = 1'-0"

B SA10.1 SA10.2

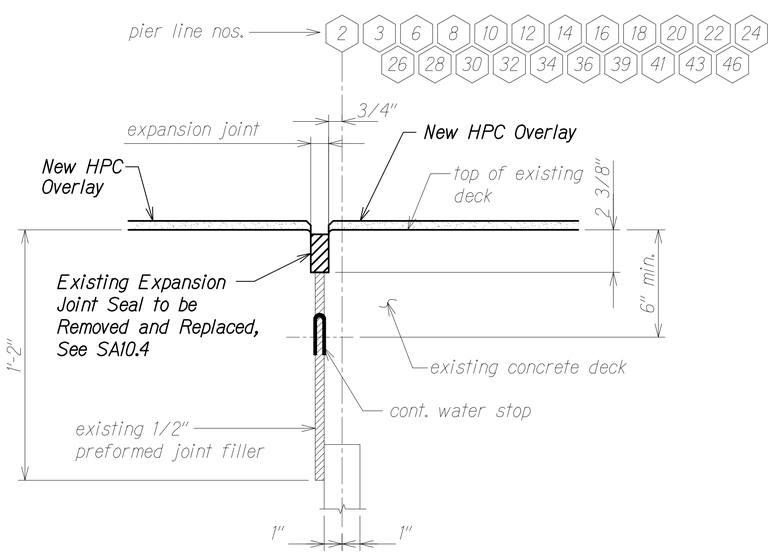

EXISTING DECK EXPANSION JOINT AT ORIGINAL DECK

Scale: 3" = 1'-0"

C SA10.1 SA10.2

NOTE:

The Contractor shall verify all expansion joint widths.

ERIC Y. MATSUMOTO
LICENSED PROFESSIONAL ENGINEER
NO. 10156-S
HAWAII, U.S.A.

THIS WORK WAS PREPARED BY ME OR UNDER MY SUPERVISION.

SIGNATURE — EXPIRATION DATE OF THE LICENSE 4-30-24

STATE OF HAWAII
DEPARTMENT OF TRANSPORTATION
HIGHWAYS DIVISION

PEARL CITY VIADUCT - EXISTING EXPANSION JOINT DETAILS

INTERSTATE ROUTE H-1 IMPROVEMENTS
Vicinity of Pearl City Viaduct to Waimalu Viaduct
Federal-Aid Project No. NH-H1-1(285)

Scale: As Noted Date: May 2023

SHEET No. SA10.2 OF 5 SHEETS

ORIGINAL PLAN	SURVEY PLOTTED BY	DATE
	DRAWN BY	
NOTE BOOK	TRACED BY	
	DESIGNED BY	
No.	QUANTITIES BY	
	CHECKED BY	

DRAWING NAME: Z:\00 ONGOING\22-001.8 PEARL CITY VIADUCT REPAIRS\01 CAD\05-23-23 10\PCV\PCVR-SA1002 PCV EXP JOINT DETL.DWG PLOT TIME: 05-24-23 9:27 AM

FED. ROAD DIST. NO.	STATE	FEDERAL AID PROJ. NO.	FISCAL YEAR	SHEET NO.	TOTAL SHEETS
HAWAII	HAW.	NH-HI-1(285)	2023	255	287

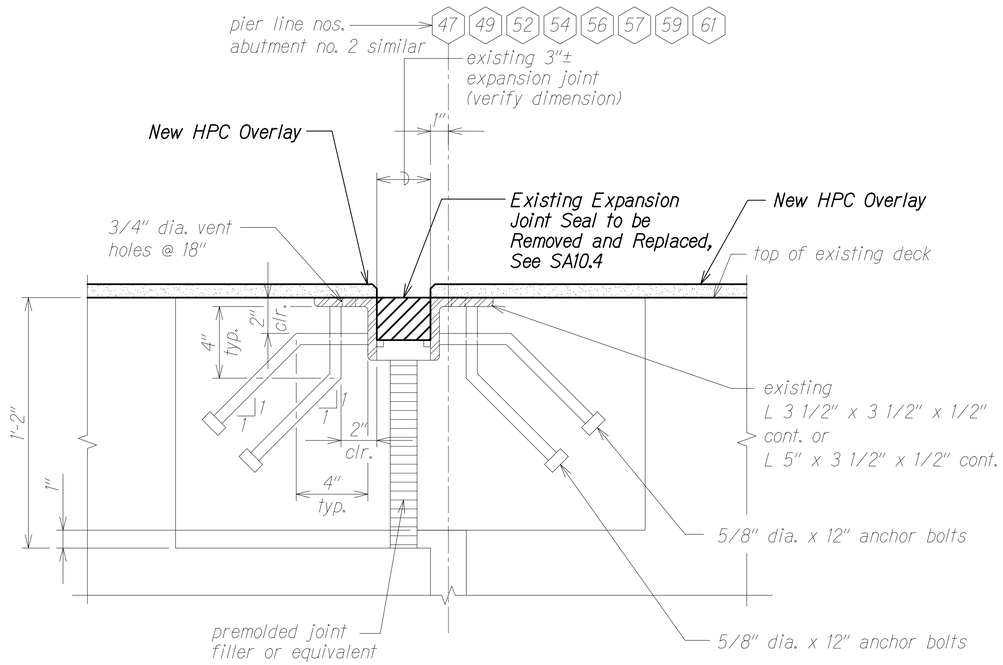

EXISTING DECK EXPANSION JOINT AT WIDENING

Scale: 3" = 1'-0"

A
SA10.1 | SA10.3

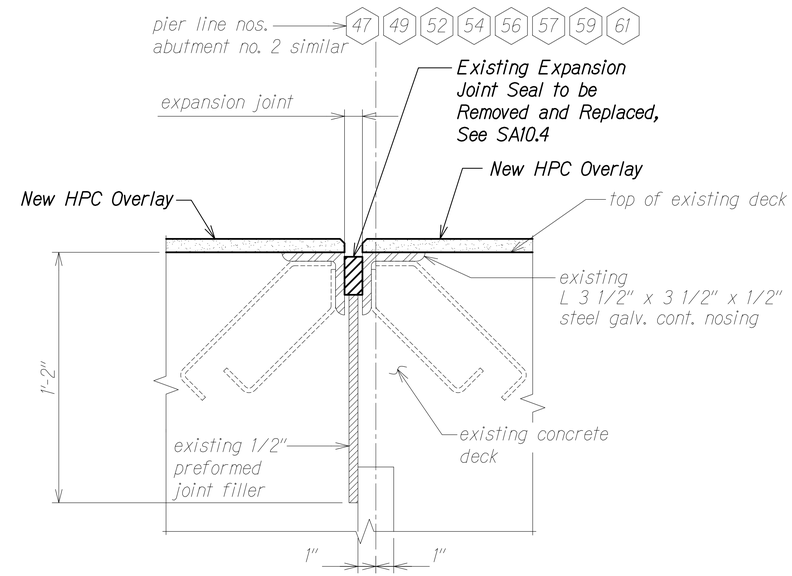

TYPICAL EXISTING ORIGINAL DECK EXPANSION JOINT

Scale: 3" = 1'-0"

B
SA10.1 | SA10.3

NOTES:

1. The Contractor shall verify all expansion joint widths.
2. Expansion joint at Pier No. 61 is for IB only.

ERIC Y. MATSUMOTO
LICENSED PROFESSIONAL ENGINEER
NO. 10156-S
HAWAII, U.S.A.

THIS WORK WAS PREPARED BY ME OR UNDER MY SUPERVISION.

SIGNATURE — EXPIRATION DATE OF THE LICENSE 4-30-24

STATE OF HAWAII
DEPARTMENT OF TRANSPORTATION
HIGHWAYS DIVISION

PEARL CITY VIADUCT - EXISTING EXPANSION JOINT DETAILS

INTERSTATE ROUTE H-1 IMPROVEMENTS
Vicinity of Pearl City Viaduct to Waimalu Viaduct
Federal-Aid Project No. NH-HI-1(285)

Scale: As Noted — Date: May 2023

SHEET No. SA10.3 OF 5 SHEETS

ORIGINAL PLAN | SURVEY PLOTTED BY | DRAWN BY | TRACED BY | DESIGNED BY | QUANTITIES BY | CHECKED BY | DATE
NOTE BOOK No.

DRAWING NAME: Z:\00 ONGOING\22-0018 PEARL CITY VIADUCT REPAIRS\01 CAD\05-23-23 100PCT\PCVR-SA1002 PCV EXP JOINT DETLWG PLOT TIME: 05-24-23, 9:28 AM

FED. ROAD DIST. NO.	STATE	FEDERAL AID PROJ. NO.	FISCAL YEAR	SHEET NO.	TOTAL SHEETS
HAWAII	HAW.	NH-HI-1(285)	2023	256	287

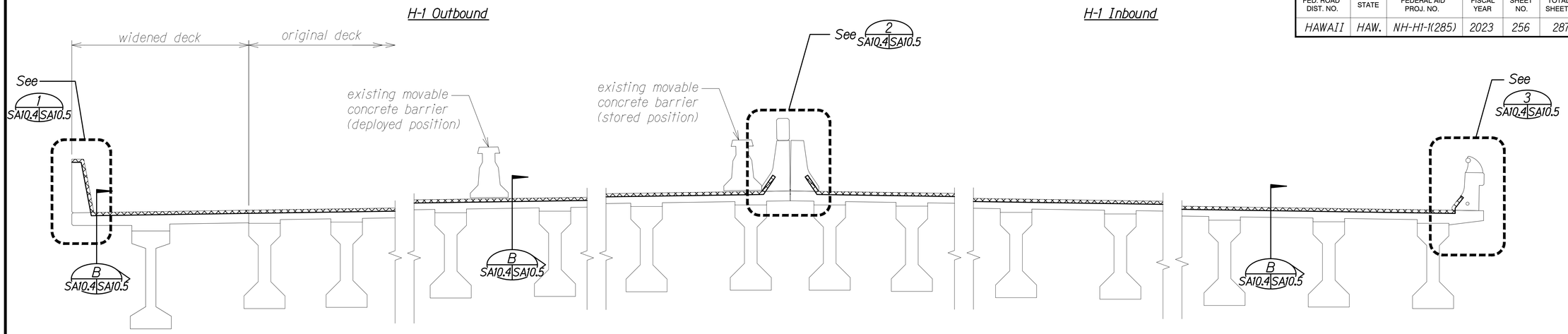

NORMAL DECK SECTION AT NEW EXPANSION JOINT COMPRESSION SEAL AT PIER NOS. 2 TO 46

Scale: 3/8" = 1'-0"

A SA10.4 SA10.4

LEGEND:

New Expansion Joint Compression Seal

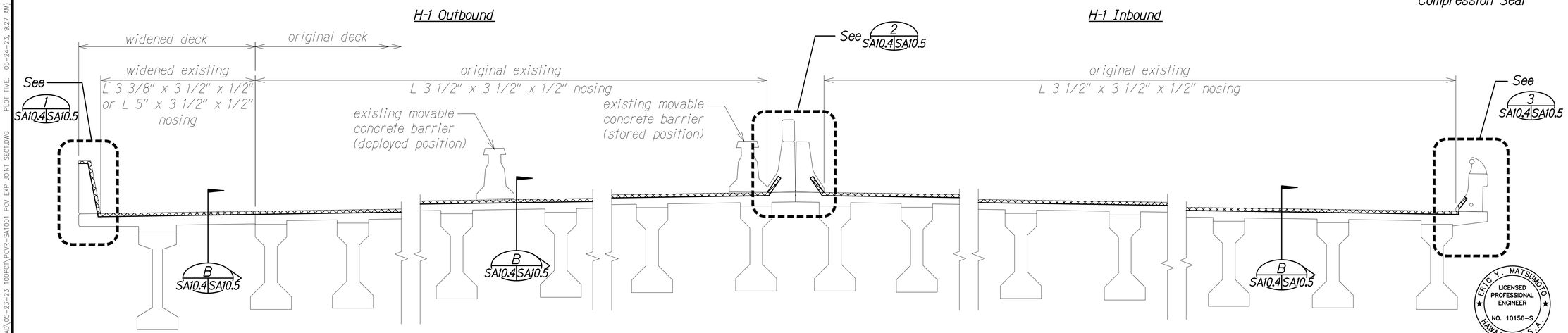

LEGEND:

New Expansion Joint Compression Seal

NORMAL DECK SECTION AT NEW EXPANSION JOINT COMPRESSION SEAL AT PIER NOS. 47 TO 59, 61 (IB ONLY) AND ABUTMENT NO. 2

Scale: 3/8" = 1'-0"

B SA10.4 SA10.4

NOTES:

1. New compression seals shall conform to Section 515 DECK EXPANSION JOINTS of the Special Provisions.
2. Installation widths are approximate. The Contractor shall field verify expansion joint widths prior to ordering compression seal materials. The Contractor shall be aware of the date and time the field measurements are recorded due to the effects of temperature.
3. The concrete at the expansion joint shall be sound after replacement of existing compression seals. If defective concrete is discovered prior to the removal of the existing expansion joint seal, notify the Engineer immediately.

ERIC Y. MATSUMOTO
LICENSED PROFESSIONAL ENGINEER
NO. 10156-S
HAWAII, U.S.A.

THIS WORK WAS PREPARED BY ME OR UNDER MY SUPERVISION.

SIGNATURE — EXPIRATION DATE OF THE LICENSE 4-30-24

STATE OF HAWAII
DEPARTMENT OF TRANSPORTATION
HIGHWAYS DIVISION

PEARL CITY VIADUCT - NEW EXPANSION JOINT COMPRESSION SEAL DETAILS

INTERSTATE ROUTE H-1 IMPROVEMENTS
Vicinity of Pearl City Viaduct to Waimalu Viaduct
Federal-Aid Project No. NH-HI-1(285)

Scale: As Noted — Date: May 2023

SHEET No. SA10.4 OF 5 SHEETS

ORIGINAL PLAN — NOTE BOOK No. — SURVEY PLOTTED BY — DRAWN BY — TRACED BY — DESIGNED BY — QUANTITIES BY — CHECKED BY — DATE

DRAWING NAME: Z:\JOB ONGOING\22-001 8 PEARL CITY VIADUCT REPAIRS\01 CAD\05-23-23 100PCT\POYR-SA1001 POV EXP JOINT SECT.DWG PLOT TIME: 05-24-23, 9:27 AM

FED. ROAD DIST. NO.	STATE	FEDERAL AID PROJ. NO.	FISCAL YEAR	SHEET NO.	TOTAL SHEETS
HAWAII	HAW.	NH-H1-1(285)	2023	257	287

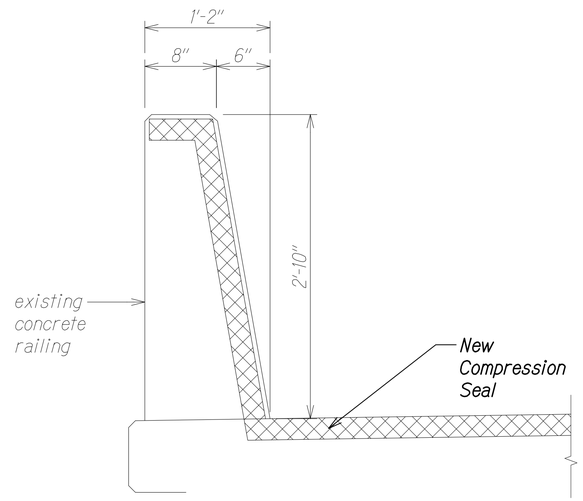

DETAIL 1
Scale: 1 1/2" = 1'-0" SA10.4 | SA10.5

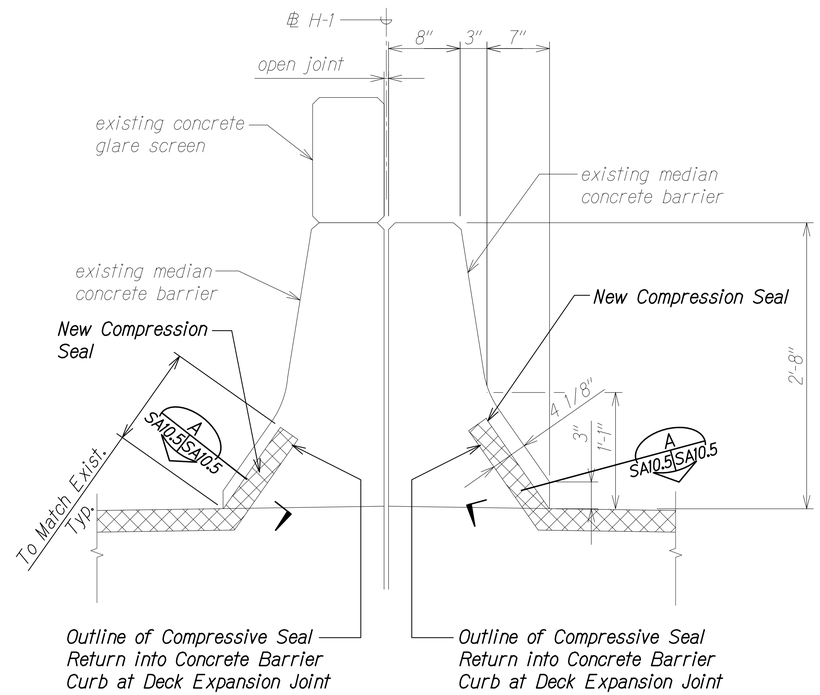

DETAIL 2
Scale: 1 1/2" = 1'-0" SA10.4 | SA10.5

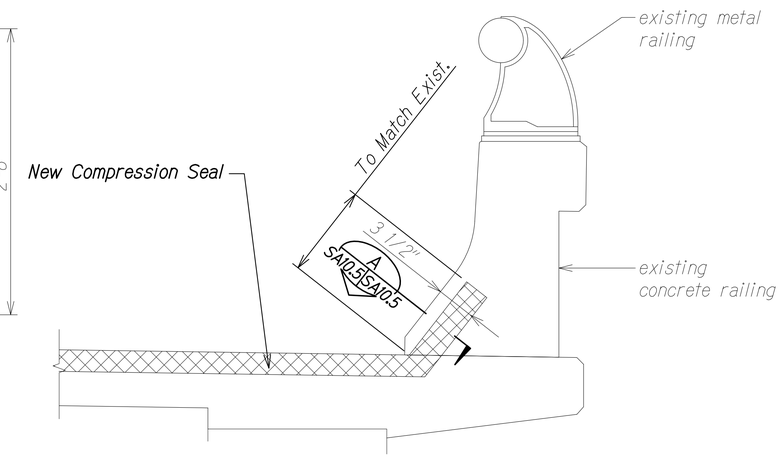

DETAIL 3
Scale: 1 1/2" = 1'-0" SA10.4 | SA10.5

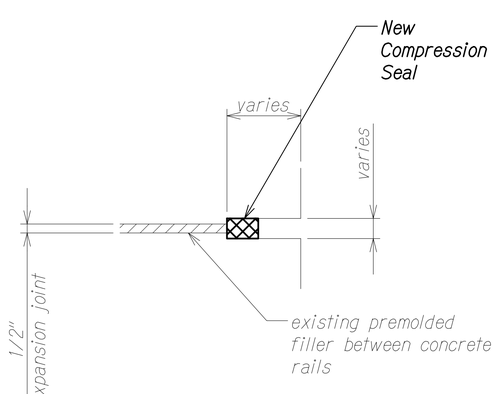

SECTION A
Scale: 3" = 1'-0" SA10.5 | SA10.5

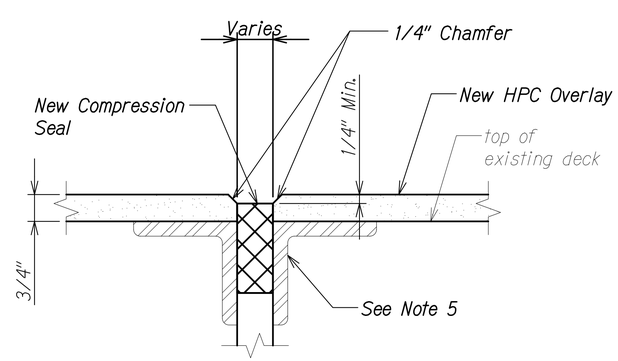

NEW COMPRESSION SEAL B
Scale: 6" = 1'-0" SA10.4 | SA10.5

NOTE:

Angle irons exist at Pier Nos. 47 to 59, 61 (IB only) and Abutment No. 2.
Anchors are not shown for clarity.

ERIC Y. MATSUMOTO
LICENSED PROFESSIONAL ENGINEER
NO. 10156-S
HAWAII, U.S.A.

THIS WORK WAS PREPARED BY ME OR UNDER MY SUPERVISION.

SIGNATURE — EXPIRATION DATE OF THE LICENSE 4-30-24

STATE OF HAWAII
DEPARTMENT OF TRANSPORTATION
HIGHWAYS DIVISION

PEARL CITY VIADUCT - NEW EXPANSION JOINT COMPRESSION SEAL DETAILS

INTERSTATE ROUTE H-1 IMPROVEMENTS
Vicinity of Pearl City Viaduct to Waimalu Viaduct
Federal-Aid Project No. NH-H1-1(285)

Scale: As Noted Date: May 2023

SHEET No. SA10.5 OF 5 SHEETS

ORIGINAL PLAN | SURVEY PLOTTED BY | DRAWN BY | TRACED BY | DESIGNED BY | QUANTITIES BY | CHECKED BY | DATE | NOTE BOOK No.

DRAWING NAME: Z:\OD ONGOING\22-0013 PEARL CITY VIADUCT REPAIRS\01 CAD\05-23-23 100PCT\PCVR-SA1002 PCV EXP JOINT DET.DWG PLOT TIME: 05-24-23, 9:28 AM

FED. ROAD DIST. NO.	STATE	FEDERAL AID PROJ. NO.	FISCAL YEAR	SHEET NO.	TOTAL SHEETS
HAWAII	HAW.	NH-H1-1(285)	2023	258	287

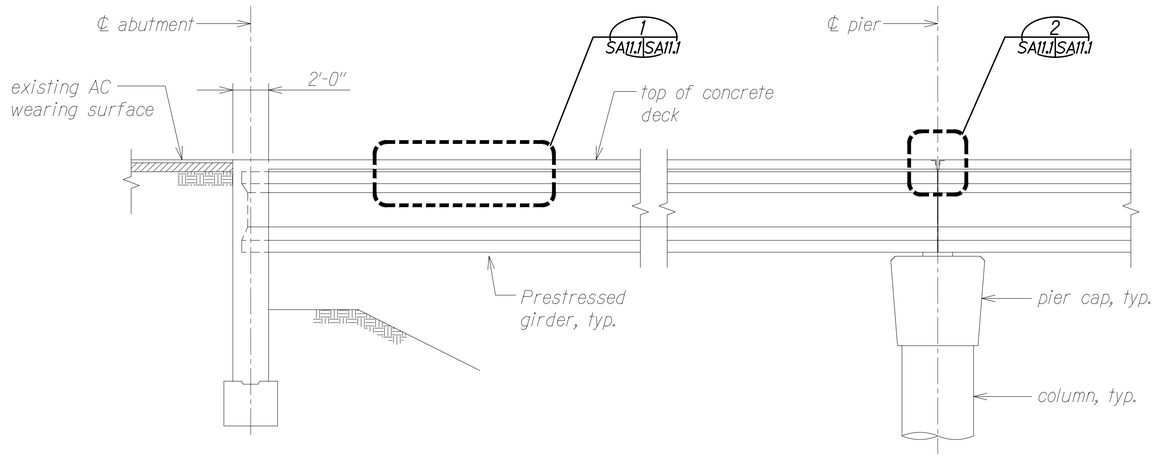

TYPICAL LONGITUDINAL SECTION (A, SA11.1 | SA11.1)
Scale: 1/4" = 1'-0"

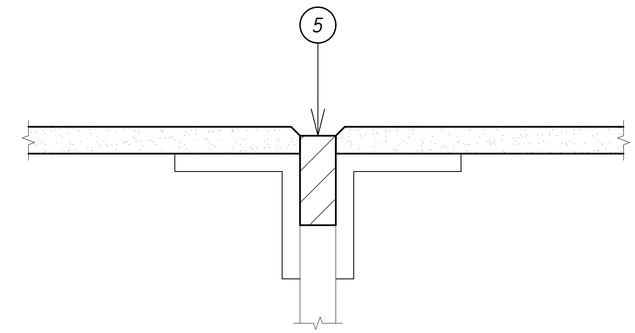

DETAIL (2, SA11.1 | SA11.1)
Scale: 6" = 1'-0"

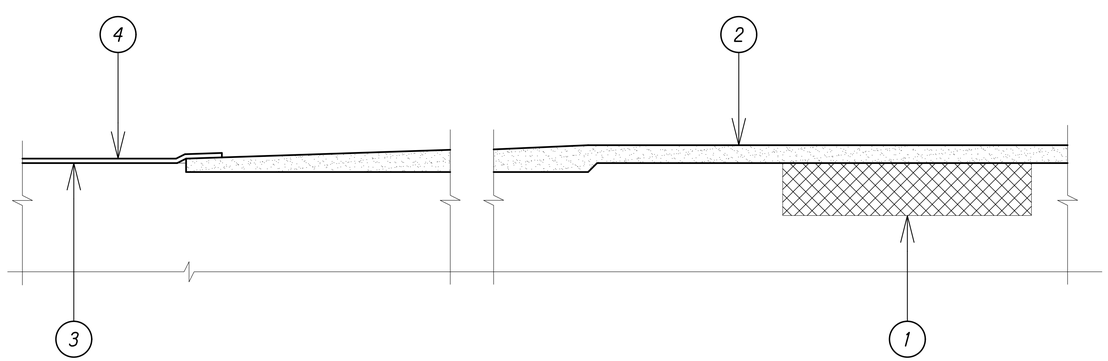

DETAIL (1, SA11.1 | SA11.1)
Scale: 6" = 1'-0"

CONSTRUCTION SEQUENCE:

1. Remove and repair defective concrete with VESLMC. See Section 682 - DEFECTIVE CONCRETE REPAIRS of the Special Provisions.
2. Apply HPC no later than 48 hours after surface preparation according to Section 678 - HYBRID POLYMER CONCRETE (HPC) of the Special Provisions.
3. Apply penetrating sealer no later than 48 hours after surface preparation and according to Section 683 - PENETRATING SEALER ON BRIDGE DECK of the Special Provisions.
4. Place surface treatment no later than 48 hours after application of penetrating sealer and HPC. Surface preparation shall be in accordance with Section 680 - SURFACE TREATMENT of the Special Provisions.
5. Replace expansion joint compression seals according to Section 515 - DECK EXPANSION JOINT of the Special Provision.

LEGEND:

- Defective Concrete
- HPC
- New Compression Seal

ERIC Y. MATSUMOTO
LICENSED PROFESSIONAL ENGINEER
NO. 10156-S
HAWAII, U.S.A.

THIS WORK WAS PREPARED BY ME OR UNDER MY SUPERVISION.

SIGNATURE — EXPIRATION DATE OF THE LICENSE 4-30-24

STATE OF HAWAII
DEPARTMENT OF TRANSPORTATION
HIGHWAYS DIVISION

PEARL CITY VIADUCT
CONSTRUCTION SEQUENCE

INTERSTATE ROUTE H-1 IMPROVEMENTS
Vicinity of Pearl City Viaduct to Waimalu Viaduct
Federal-Aid Project No. NH-H1-1(285)

Scale: As Noted — Date: May 2023

SHEET No. SA11.1 OF 1 SHEETS

ORIGINAL PLAN	SURVEY PLOTTED BY	DATE
	DRAWN BY	
NOTE BOOK	TRACED BY	
	DESIGNED BY	
No.	QUANTITIES BY	
	CHECKED BY	

DRAWING NAME: Z:\OD ONGOING\22-001.8 PEARL CITY VIADUCT REPAIRS\01 CAD\05-23-23 100PCT\PCVR-SA1101 PCV CONST SEQ.DWG PLOT TIME: 05-24-23, 9:28 AM

FED. ROAD DIST. NO.	STATE	FEDERAL AID PROJ. NO.	FISCAL YEAR	SHEET NO.	TOTAL SHEETS
HAWAII	HAW.	NH-HI-1(285)	2023	259	287

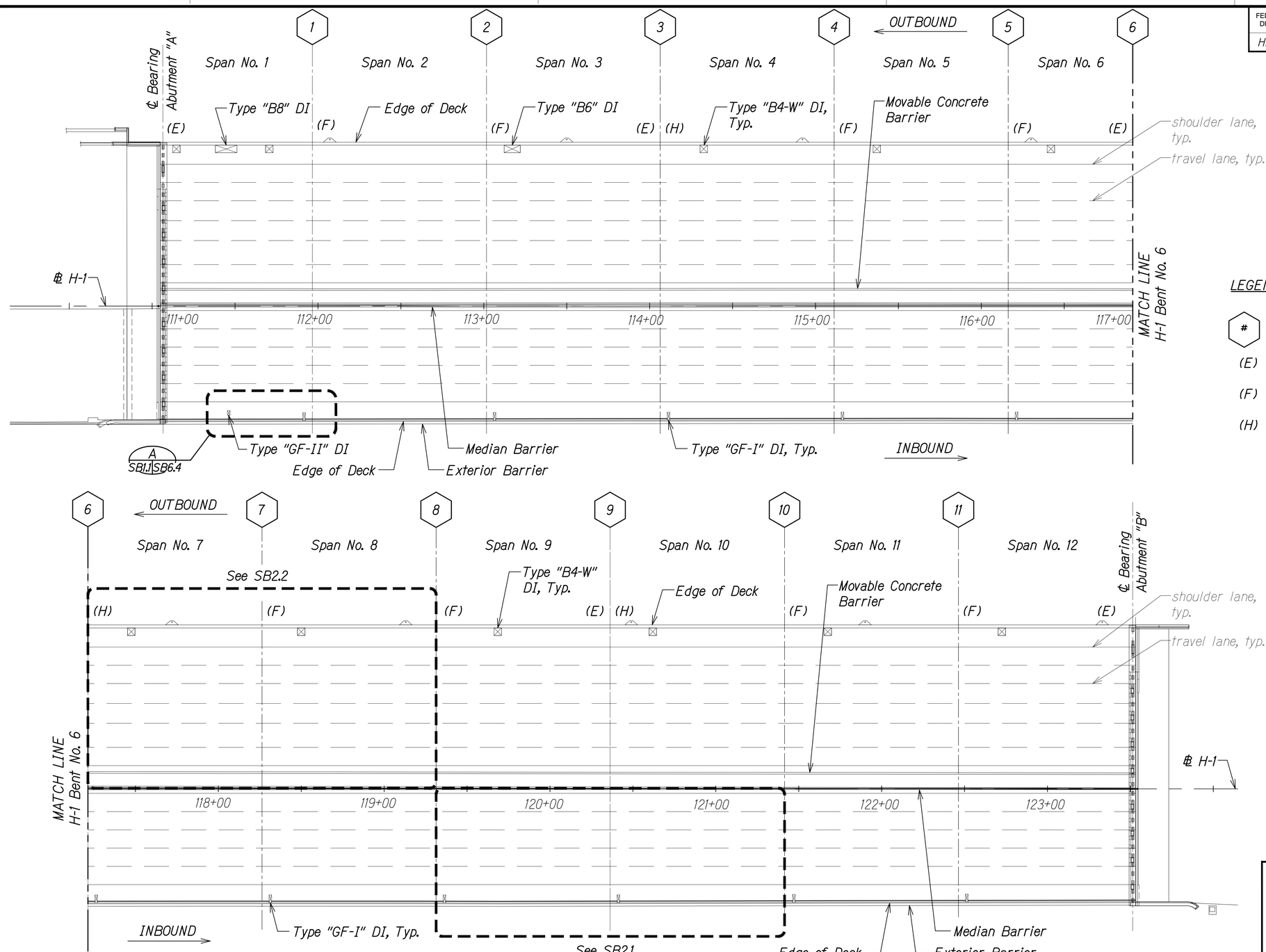

WAIMALU VIADUCT - KEY PLAN

Scale: 1" = 30'-0"

LEGEND:

- # Bent No.
- (E) Expansion Joint
- (F) Fixed Joint
- (H) Hinged Joint

ERIC Y. MATSUMOTO
LICENSED PROFESSIONAL ENGINEER
NO. 10156-S
HAWAII, U.S.A.

THIS WORK WAS PREPARED BY ME OR UNDER MY SUPERVISION.

SIGNATURE — EXPIRATION DATE OF THE LICENSE 4-30-24

STATE OF HAWAII
DEPARTMENT OF TRANSPORTATION
HIGHWAYS DIVISION

WAIMALU VIADUCT KEY PLAN

INTERSTATE ROUTE H-1 IMPROVEMENTS
Vicinity of Pearl City Viaduct to Waimalu Viaduct
Federal-Aid Project No. NH-HI-1(285)

Scale: As Noted — Date: May 2023

SHEET No. SB1.1 OF 1 SHEETS

ORIGINAL PLAN — NOTE BOOK No. — SURVEY PLOTTED BY — DRAWN BY — TRACED BY — DESIGNED BY — QUANTITIES BY — CHECKED BY — DATE

DRAWING NAME: Z:\OD ONGOING\22-031-B PEARL CITY VIADUCT REPAIRS\01 CAD\05-23-23 100PCT\PCVR-SB0101 WV KEY PLAN.DWG PLOT TIME: 05-24-23, 9:29 AM

FED. ROAD DIST. NO.	STATE	FEDERAL AID PROJ. NO.	FISCAL YEAR	SHEET NO.	TOTAL SHEETS
HAWAII	HAW.	NH-H1-1(285)	2023	260	287

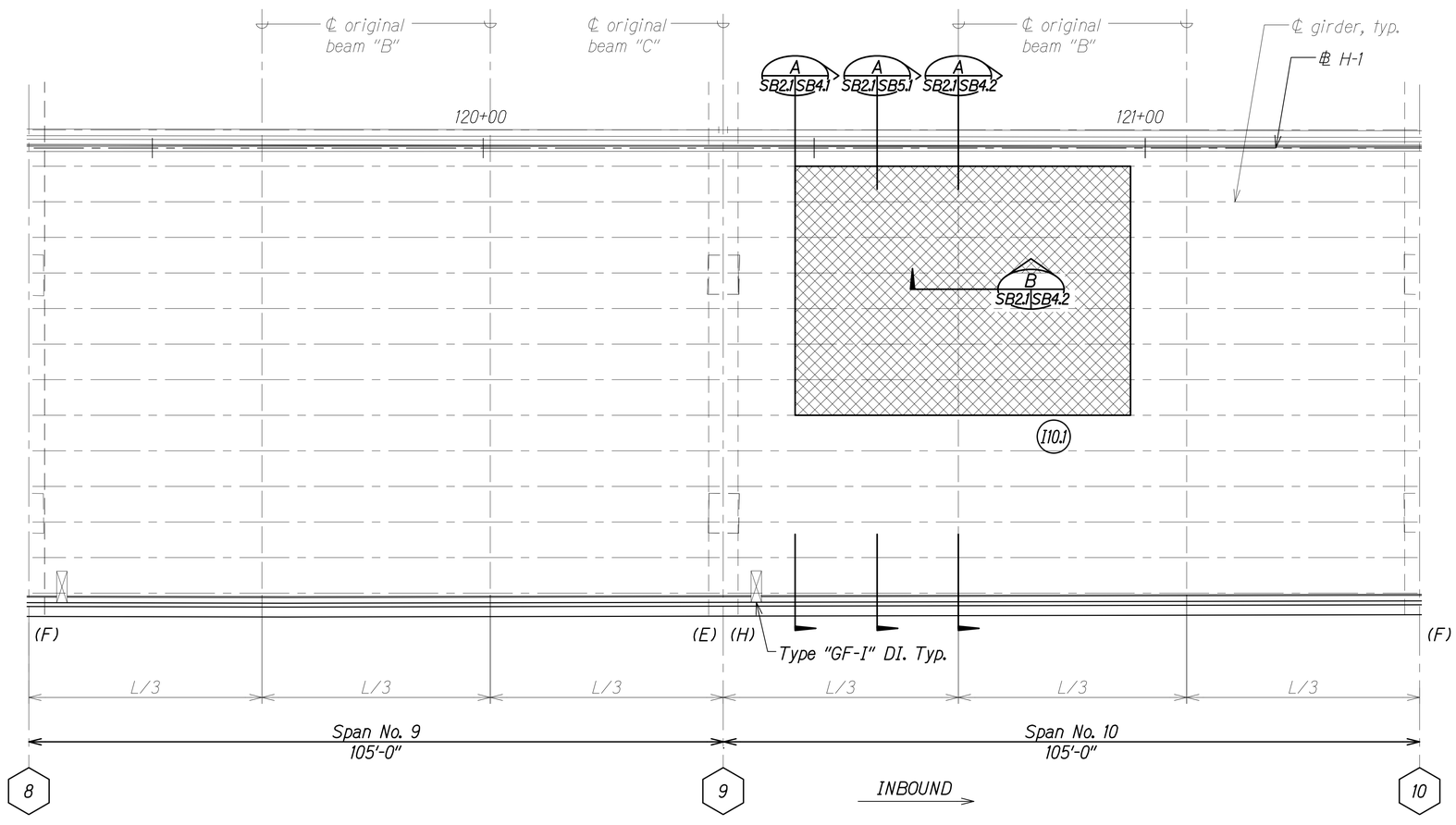

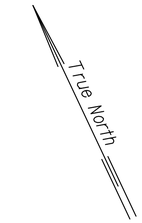

NOTE:

The Contractor shall remove the existing surface treatment a minimum of 3'-0" beyond the repair limits.

REPAIR PLAN A SB2.1 SB2.1

Scale: 1" = 10'-0"

LEGEND:

- # — Bent No.
- IX.# — Inbound Repair (Defect No., Span No., Inbound)
- Full Depth Repair Area with VESLMC
- (E) Expansion Joint
- (F) Fixed Joint
- (H) Hinged Joint

WAIMALU VIADUCT IB FULL DEPTH REPAIR SCHEDULE

Defect No.	Span No.	Repair Detail	Area (SF)
I10.1	10	A SB2.1 SB5.1; B SB2.1 SB4.2	1,906

ERIC Y. MATSUMOTO
LICENSED PROFESSIONAL ENGINEER
NO. 10156-S
HAWAII, U.S.A.

THIS WORK WAS PREPARED BY ME OR UNDER MY SUPERVISION.

SIGNATURE — EXPIRATION DATE OF THE LICENSE 4-30-24

STATE OF HAWAII
DEPARTMENT OF TRANSPORTATION
HIGHWAYS DIVISION

WAIMALU VIADUCT
IB REPAIR PLAN

INTERSTATE ROUTE H-1 IMPROVEMENTS
Vicinity of Pearl City Viaduct to Waimalu Viaduct
Federal-Aid Project No. NH-H1-1(285)

Scale: As Noted — Date: May 2023

SHEET No. SB2.1 OF 2 SHEETS

ORIGINAL PLAN | SURVEY PLOTTED BY | DRAWN BY | TRACED BY | DESIGNED BY | QUANTITIES BY | CHECKED BY | DATE
NOTE BOOK No.

DRAWING NAME: Z:\00 ONGOING\22-0018 PEARL CITY VIADUCT REPAIRS\01 CAD\GS-23-23 100PCT\PCYR-SB0201 WV PARTIAL DECK REPAIR LAY PLAN.DWG PLOT TIME: 05-24-23, 9:29 AM

FED. ROAD DIST. NO.	STATE	FEDERAL AID PROJ. NO.	FISCAL YEAR	SHEET NO.	TOTAL SHEETS
HAWAII	HAW.	NH-H1-1(285)	2023	261	287

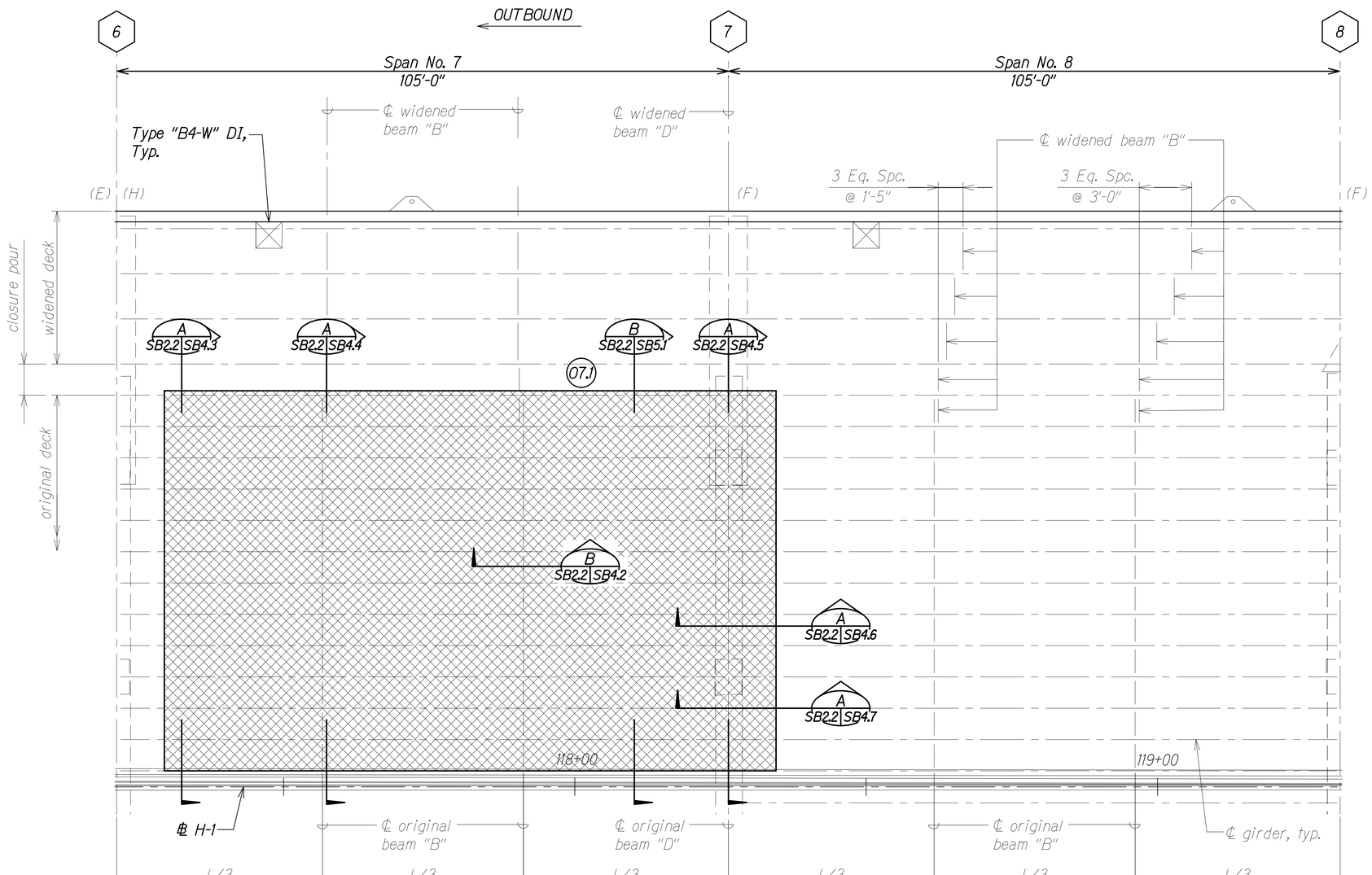

REPAIR PLAN (A SB2.2 SB2.2)

Scale: 1" = 10'-0"

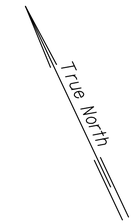

NOTE:

The Contractor shall remove the existing surface treatment a minimum of 3'-0" beyond the repair limits.

LEGEND:

- # — Bent No.
- OX.# — Outbound Repair
  - Defect No.
  - Span No.
  - Outbound
- Full Depth Repair Area with VESLMC
- (E) Expansion Joint
- (F) Fixed Joint
- (H) Hinged Joint

WAIMALU VIADUCT OB FULL DEPTH REPAIR SCHEDULE

Defect No.	Span No.	Repair Detail	Area (SF)
07.1	7/8	B SB2.2 SB5.1; B SB2.2 SB4.2; A SB2.2 SB4.6; A SB2.2 SB4.7	6,852

ERIC Y. MATSUMOTO
LICENSED PROFESSIONAL ENGINEER
NO. 10156-S
HAWAII, U.S.A.

THIS WORK WAS PREPARED BY ME OR UNDER MY SUPERVISION.

SIGNATURE — EXPIRATION DATE OF THE LICENSE 4-30-24

STATE OF HAWAII
DEPARTMENT OF TRANSPORTATION
HIGHWAYS DIVISION

WAIMALU VIADUCT
OB REPAIR PLAN

INTERSTATE ROUTE H-1 IMPROVEMENTS
Vicinity of Pearl City Viaduct to Waimalu Viaduct
Federal-Aid Project No. NH-H1-1(285)

Scale: As Noted — Date: May 2023

SHEET No. SB2.2 OF 2 SHEETS

ORIGINAL PLAN	SURVEY PLOTTED BY	DATE
	DRAWN BY	
NOTE BOOK	TRACED BY	
	DESIGNED BY	
No.	QUANTITIES BY	
	CHECKED BY	

DRAWING NAME: Z:\OD ONGOING\22-001.8 PEARL CITY VIADUCT REPAIRS\01 CAD\05-25-23 1GRPCT\PCVR-SB0201 WV PARTIAL DECK REPAIR LAY PLAN.DWG PLOT TIME: 05-24-23, 3:34 PM

FED. ROAD DIST. NO.	STATE	FEDERAL AID PROJ. NO.	FISCAL YEAR	SHEET NO.	TOTAL SHEETS
HAWAII	HAW.	NH-H1-1(285)	2023	262	287

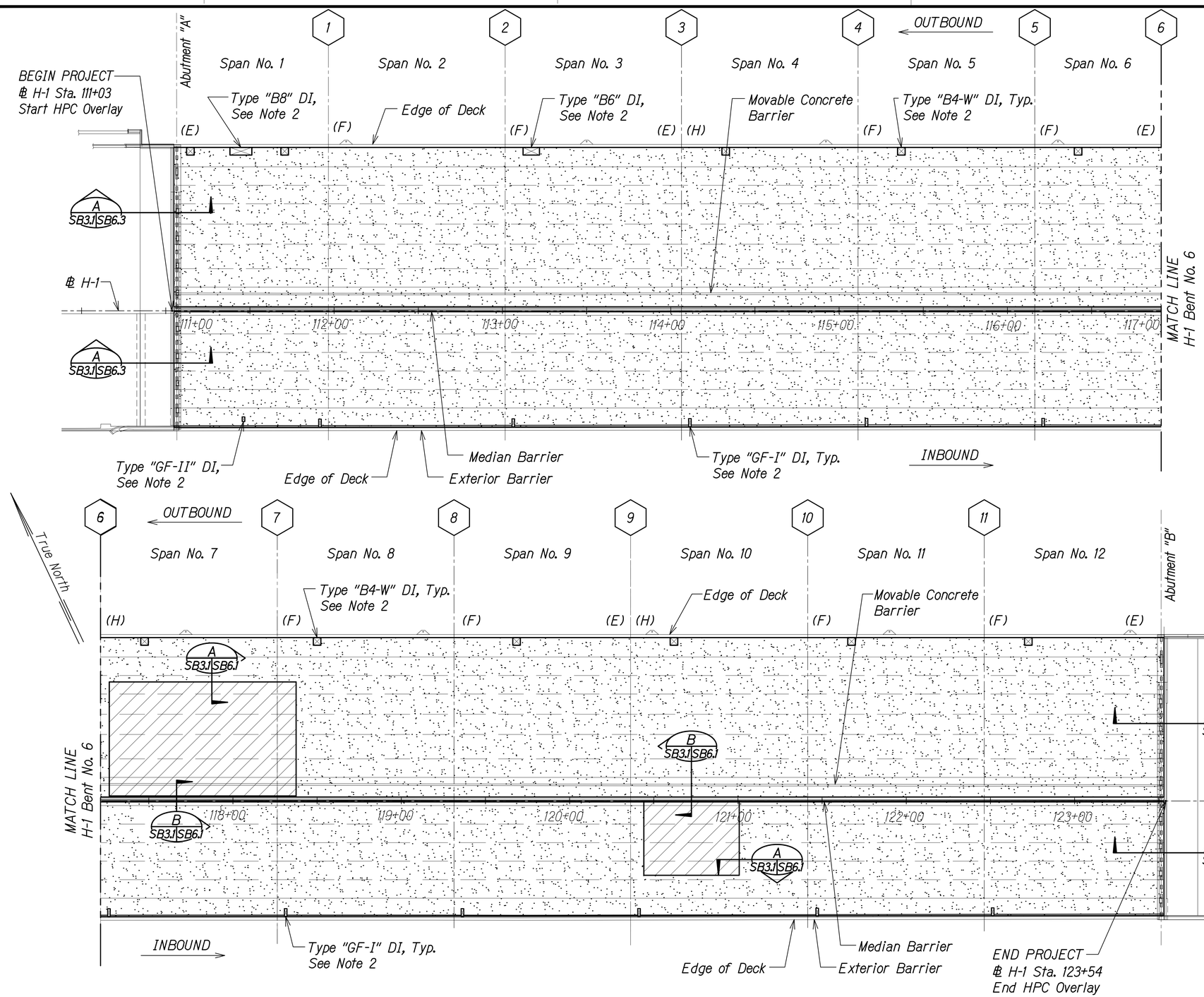

WAIMALU VIADUCT - OVERLAY PLAN

Scale: 1" = 30'-0"

LEGEND:

#	Bent No.	(E)	Expansion Joint, See Note 3.
	New Surface Treatment below HPC Overlay	(F)	Fixed Joint
		(H)	Hinged Joint
	HPC Overlay		

NOTES:

1. New surface treatment shall match existing surface treatment.
2. Drain inlet grates shall be replaced and drain inlet frames raised. See SB6.4 to SB6.11.
3. All expansion joint compression seals shall be replaced. See SB7.1 to SB7.3.

NEW SURFACE TREATMENT	
Direction	Area (SF)
IB	2,473
OB	7,576

ERIC Y. MATSUMOTO
LICENSED PROFESSIONAL ENGINEER
NO. 10156-S
HAWAII, U.S.A.

THIS WORK WAS PREPARED BY ME OR UNDER MY SUPERVISION.

SIGNATURE — EXPIRATION DATE OF THE LICENSE 4-30-24

STATE OF HAWAII
DEPARTMENT OF TRANSPORTATION
HIGHWAYS DIVISION

WAIMALU VIADUCT
OVERLAY LAYOUT PLAN

INTERSTATE ROUTE H-1 IMPROVEMENTS
Vicinity of Pearl City Viaduct to Waimalu Viaduct
Federal-Aid Project No. NH-H1-1(285)

Scale: As Noted — Date: May 2023

SHEET No. SB3.1 OF 1 SHEETS

ORIGINAL PLAN	SURVEY PLOTTED BY	DATE
	DRAWN BY	
NOTE BOOK	TRACED BY	
	DESIGNED BY	
No.	QUANTITIES BY	
	CHECKED BY	

DRAWING NAME: Z:\00 ONGOING\22-0018 PEARL CITY VIADUCT REPAIRS\01 CAD\05-23-23 100PCT\PCVR-SB0301 WV OVERLAY PLAN.DWG PLOT TIME: 05-24-23, 9:30 AM

FED. ROAD DIST. NO.	STATE	FEDERAL AID PROJ. NO.	FISCAL YEAR	SHEET NO.	TOTAL SHEETS
HAWAII	HAW.	NH-HI-1(285)	2023	263	287

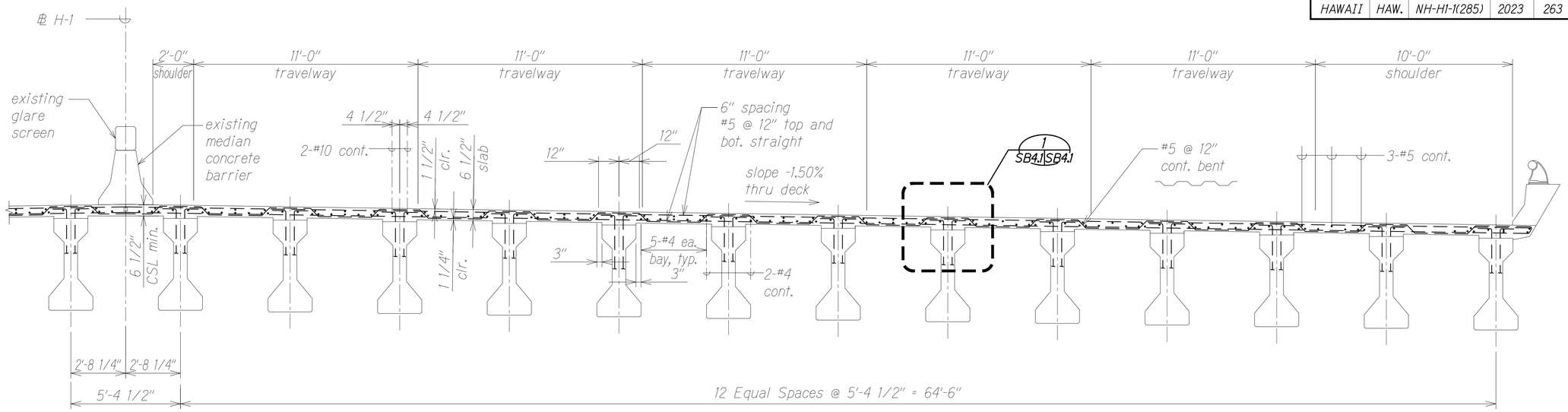

WAIMALU VIADUCT IB - EXISTING DECK SECTION

A SB2.1 SB4.1

Scale: 3/8" = 1'-0"

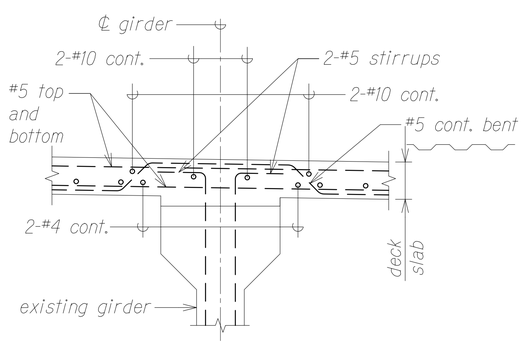

EXISTING REINFORCING

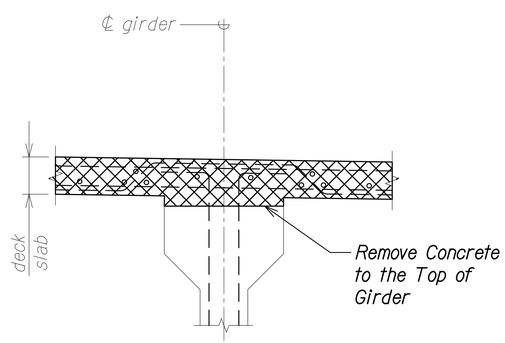

DEMOLITION

DETAIL

1 SB4.1 SB4.1

Scale: 1" = 1'-0"

SB4.3

NOTES:

1. Drawings are for information only and are based on available as-built plans provided by HDOT.
2. Defective concrete hatching not shown for clarity.
3. Do not damage existing reinforcing.
4. Do not remove concrete from existing girder.

ERIC Y. MATSUMOTO LICENSED PROFESSIONAL ENGINEER NO. 10156-S HAWAII, U.S.A.

THIS WORK WAS PREPARED BY ME OR UNDER MY SUPERVISION.

SIGNATURE — EXPIRATION DATE OF THE LICENSE 4-30-24

STATE OF HAWAII
DEPARTMENT OF TRANSPORTATION
HIGHWAYS DIVISION

WAIMALU VIADUCT
IB DECK SECTION AND DETAIL

INTERSTATE ROUTE H-1 IMPROVEMENTS
Vicinity of Pearl City Viaduct to Waimalu Viaduct
Federal-Aid Project No. NH-HI-1(285)

Scale: As Noted — Date: May 2023

SHEET No. SB4.1 OF 7 SHEETS

ORIGINAL PLAN — SURVEY PLOTTED BY — DRAWN BY — NOTE BOOK — TRACED BY — DESIGNED BY — QUANTITIES BY — CHECKED BY — DATE — No.

DRAWING NAME: Z:\OD ONGOING\22-001.8 PEARL CITY VIADUCT REPAIRS\01 CAD\05-25-23 10GPC\PCVR-SB0401 WV SECT.DWG PLOT TIME: 05-24-23, 3:36 PM

FED. ROAD DIST. NO.	STATE	FEDERAL AID PROJ. NO.	FISCAL YEAR	SHEET NO.	TOTAL SHEETS
HAWAII	HAW.	NH-H1-1(285)	2023	264	287

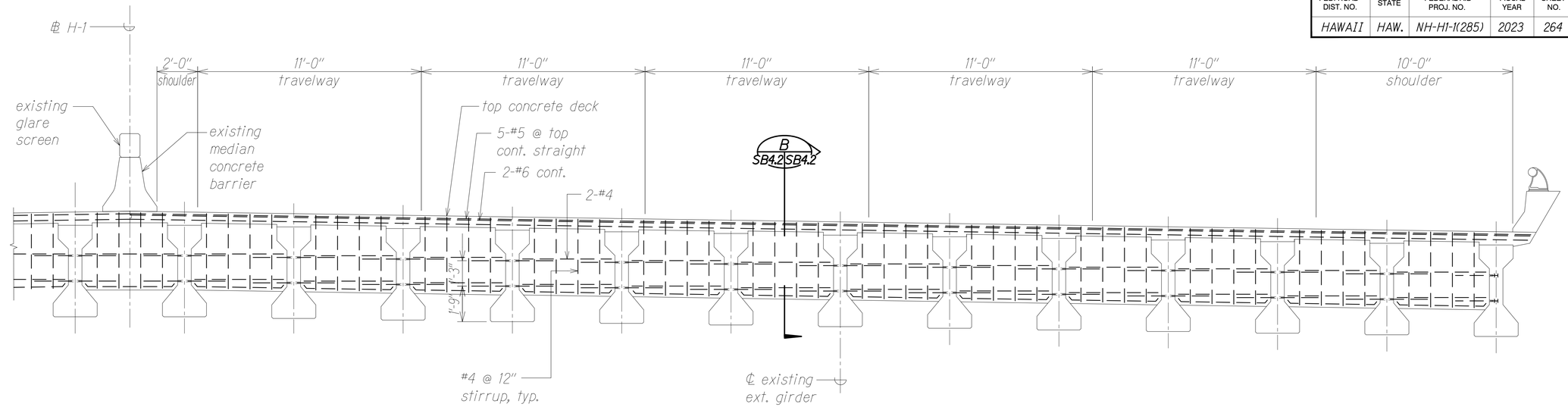

WAIMALU VIADUCT IB - EXISTING DECK SECTION

Scale: 3/8" = 1'-0"

A
SB2.1 SB4.2

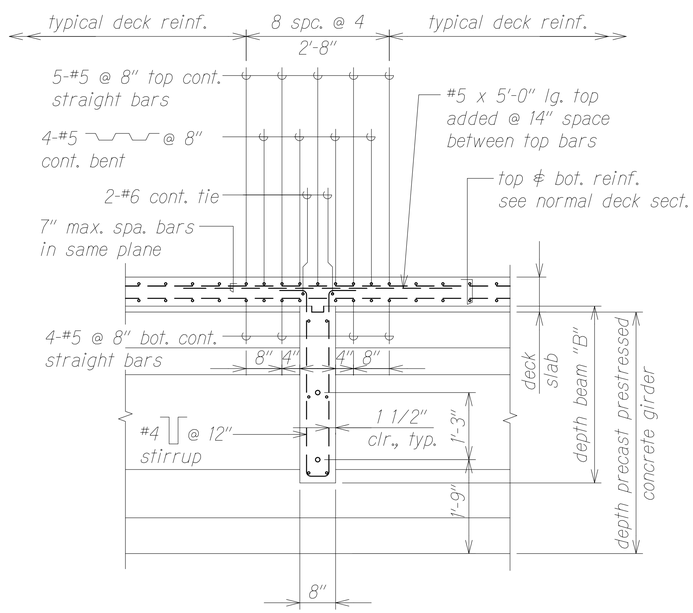

EXISTING REINFORCING

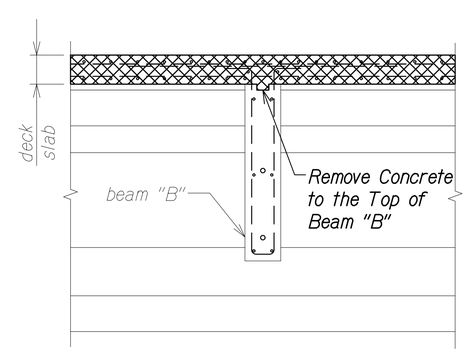

DEMOLITION

SECTION

Scale: 3/4" = 1'-0"

B
SB2.1 SB4.2

SB2.2, SB4.2, SB4.4

NOTES:

1. Drawings are for information only and are based on available as-built plans provided by HDOT.
2. Defective concrete hatching not shown for clarity.
3. Do not damage existing reinforcing.
4. Do not remove concrete from existing Beam "B".

ERIC Y. MATSUMOTO
LICENSED PROFESSIONAL ENGINEER
NO. 10156-S
HAWAII, U.S.A.

THIS WORK WAS PREPARED BY ME OR UNDER MY SUPERVISION.

SIGNATURE — EXPIRATION DATE OF THE LICENSE 4-30-24

STATE OF HAWAII
DEPARTMENT OF TRANSPORTATION
HIGHWAYS DIVISION

WAIMALU VIADUCT
IB BEAM "B" SECTIONS

INTERSTATE ROUTE H-1 IMPROVEMENTS
Vicinity of Pearl City Viaduct to Waimalu Viaduct
Federal-Aid Project No. NH-H1-1(285)

Scale: As Noted — Date: May 2023

SHEET No. SB4.2 OF 7 SHEETS

ORIGINAL PLAN | SURVEY PLOTTED BY | DRAWN BY | TRACED BY | DESIGNED BY | QUANTITIES BY | CHECKED BY | DATE
NOTE BOOK No.

DRAWING NAME: Z:\OD ONGOING\22-031 PEARL CITY VIADUCT REPAIRS\01 CAD\05-23-23 100PCT\POR-SB0401 WV SECT.DWG PLOT TIME: 05-24-23, 8:31 AM

FED. ROAD DIST. NO.	STATE	FEDERAL AID PROJ. NO.	FISCAL YEAR	SHEET NO.	TOTAL SHEETS
HAWAII	HAW.	NH-H1-1(285)	2023	265	287

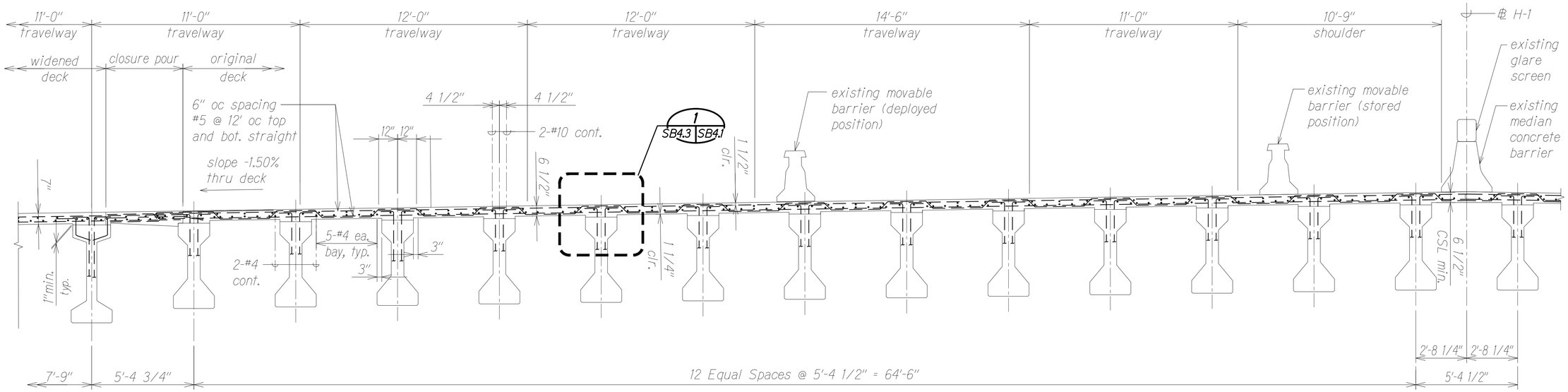

WAIMALU VIADUCT OB - EXISTING DECK SECTION

A
SB2.2 SB4.3

Scale: 3/8" = 1'-0"

NOTES:

1. Drawings are for information only and are based on available as-built plans provided by HDOT.
2. Defective concrete hatching not shown for clarity.
3. Outbound original deck thickness is 6 1/2"
4. Outbound widened deck thickness is 7".
5. Deck thickness varies at closure pour.
6. Do not damage existing reinforcing.

ERIC Y. MATSUMOTO
LICENSED PROFESSIONAL ENGINEER
NO. 10156-S
HAWAII, U.S.A.

THIS WORK WAS PREPARED BY ME OR UNDER MY SUPERVISION.

SIGNATURE — EXPIRATION DATE OF THE LICENSE 4-30-24

STATE OF HAWAII
DEPARTMENT OF TRANSPORTATION
HIGHWAYS DIVISION

WAIMALU VIADUCT
OB DECK SECTION

INTERSTATE ROUTE H-1 IMPROVEMENTS
Vicinity of Pearl City Viaduct to Waimalu Viaduct
Federal-Aid Project No. NH-H1-1(285)

Scale: As Noted — Date: May 2023

SHEET No. SB4.3 OF 7 SHEETS

ORIGINAL PLAN — SURVEY PLOTTED BY — DRAWN BY — TRACED BY — DESIGNED BY — QUANTITIES BY — CHECKED BY — DATE
NOTE BOOK No.

DRAWING NAME: Z:\OD ONGOING\22-001.8 PEARL CITY VIADUCT REPAIRS\01 CAD\05-23-23 1GRPCT\PCVR-SB0401 WV SECT.DWG PLOT TIME: 05-24-23, 9:31 AM

FED. ROAD DIST. NO.	STATE	FEDERAL AID PROJ. NO.	FISCAL YEAR	SHEET NO.	TOTAL SHEETS
HAWAII	HAW.	NH-HI-1(285)	2023	266	287

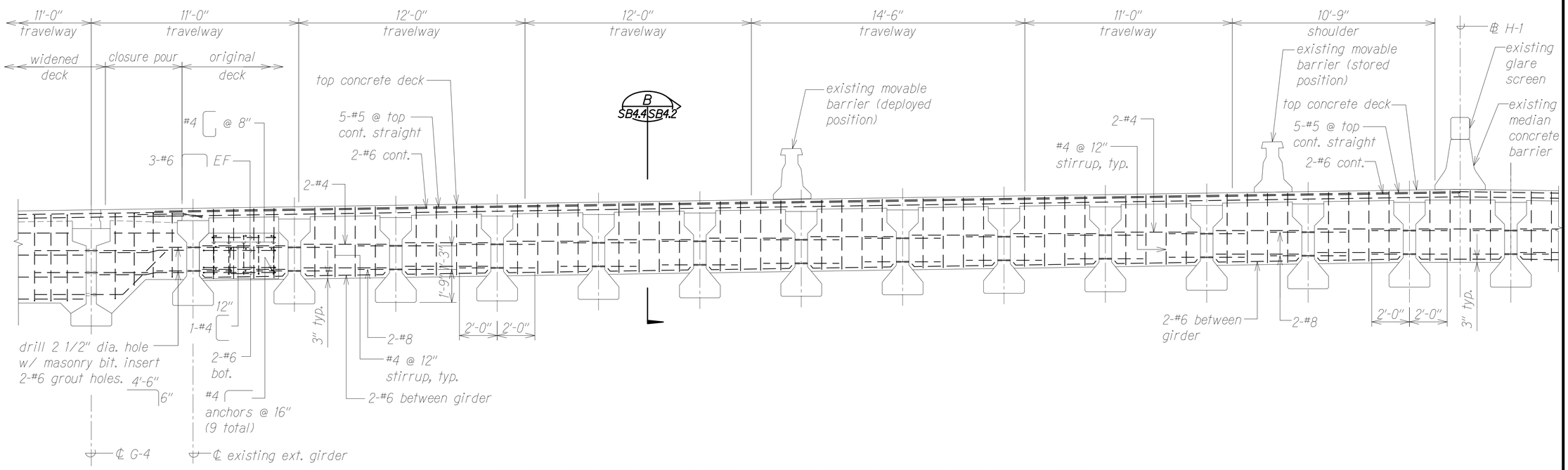

WAIMALU VIADUCT OB - EXISTING BEAM "B" SECTION

A SB2.2 SB4.4

Scale: 3/8" = 1'-0"

NOTES:

1. Drawings are for information only and are based on available as-built plans provided by HDOT.
2. Defective concrete hatching not shown for clarity.
3. Do not damage existing reinforcing.

ERIC Y. MATSUMOTO
LICENSED PROFESSIONAL ENGINEER
NO. 10156-S
HAWAII, U.S.A.

THIS WORK WAS PREPARED BY ME OR UNDER MY SUPERVISION.

SIGNATURE — EXPIRATION DATE OF THE LICENSE 6-30-24

STATE OF HAWAII
DEPARTMENT OF TRANSPORTATION
HIGHWAYS DIVISION

WAIMALU VIADUCT
OB BEAM "B" SECTION

INTERSTATE ROUTE H-1 IMPROVEMENTS
Vicinity of Pearl City Viaduct to Waimalu Viaduct
Federal-Aid Project No. NH-HI-1(285)

Scale: As Noted — Date: May 2023

SHEET No. SB4.4 OF 7 SHEETS

ORIGINAL PLAN — SURVEY PLOTTED BY, DRAWN BY, TRACED BY, DESIGNED BY, QUANTITIES BY, CHECKED BY — DATE
NOTE BOOK No.

DRAWING NAME: Z:\OD ONGOING\22-001.8 PEARL CITY VIADUCT REPAIRS\01 CAD\05-23-23 100PCT\PCVR-SB0401 WV SECT.DWG PLOT TIME: 05-24-23, 9:32 AM

FED. ROAD DIST. NO.	STATE	FEDERAL AID PROJ. NO.	FISCAL YEAR	SHEET NO.	TOTAL SHEETS
HAWAII	HAW.	NH-H1-1(285)	2023	267	287

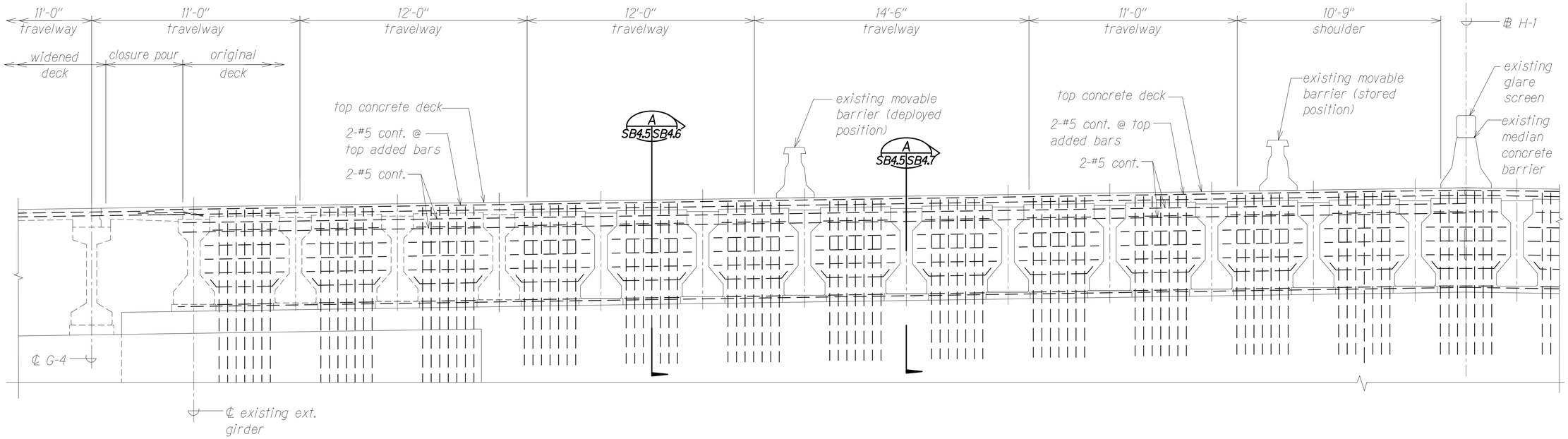

WAIMALU VIADUCT OB - EXISTING BEAM "D" SECTION

A SB2.2 SB4.5

Scale: 3/8" = 1'-0"

NOTE:

1. Drawings are for information only and are based on available as-built plans provided by HDOT.
2. Defective concrete hatching not shown for clarity.
3. Do not damage existing reinforcing.

ERIC Y. MATSUMOTO
LICENSED PROFESSIONAL ENGINEER
NO. 10156-S
HAWAII, U.S.A.

THIS WORK WAS PREPARED BY ME OR UNDER MY SUPERVISION.

SIGNATURE — EXPIRATION DATE OF THE LICENSE 4-30-24

STATE OF HAWAII
DEPARTMENT OF TRANSPORTATION
HIGHWAYS DIVISION

WAIMALU VIADUCT
OB BEAM "D" SECTION

INTERSTATE ROUTE H-1 IMPROVEMENTS
Vicinity of Pearl City Viaduct to Waimalu Viaduct
Federal-Aid Project No. NH-H1-1(285)

Scale: As Noted — Date: May 2023

SHEET No. SB4.5 OF 7 SHEETS

ORIGINAL PLAN	SURVEY PLOTTED BY	DATE
	DRAWN BY	"
NOTE BOOK	TRACED BY	"
	DESIGNED BY	"
	QUANTITIES BY	"
No.	CHECKED BY	"

DRAWING NAME: Z:\OD ONGOING\22-0018 PEARL CITY VIADUCT REPAIRS\01 CAD\05-23-23 10GPCT\PCVR-SB0401 WV SECT.DWG PLOT TIME: 05-24-23, 9:32 AM

FED. ROAD DIST. NO.	STATE	FEDERAL AID PROJ. NO.	FISCAL YEAR	SHEET NO.	TOTAL SHEETS
HAWAII	HAW.	NH-HI-1(285)	2023	268	287

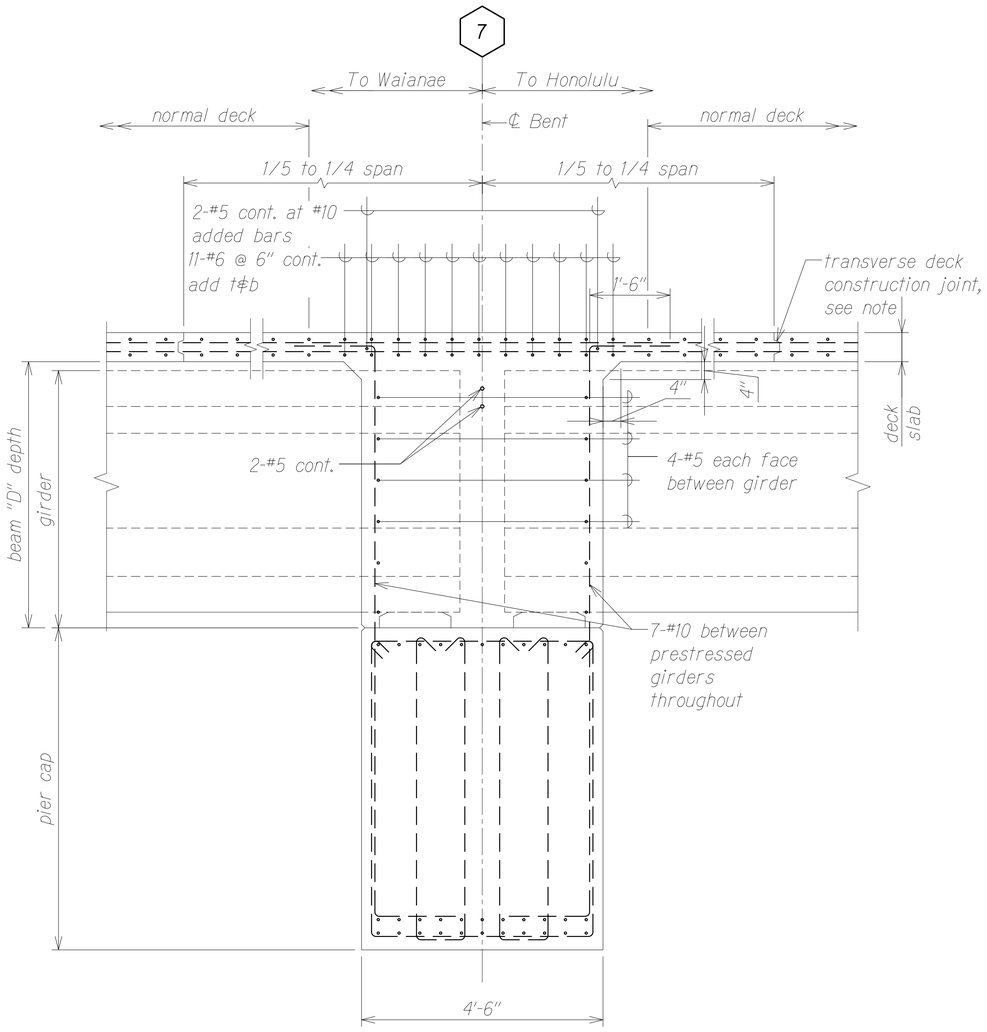

EXISTING REINFORCING

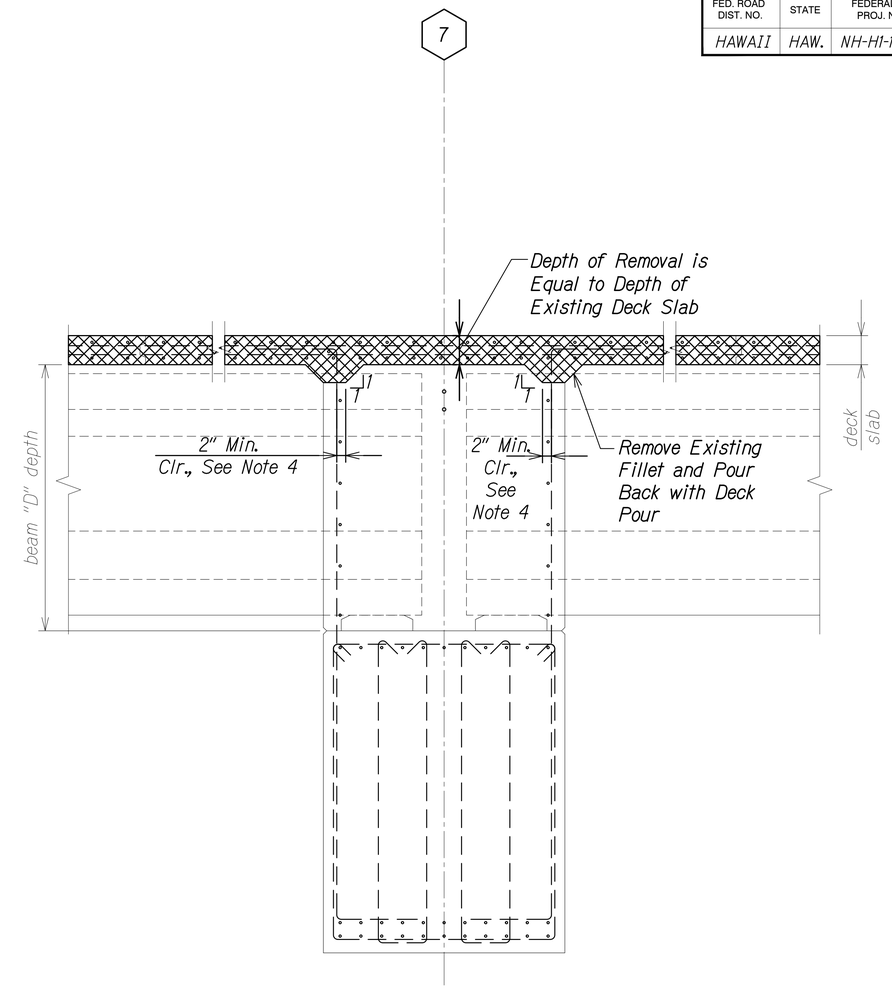

DEMOLITION

SECTION BETWEEN GIRDERS AT BEAM "D" - BENT NO. 7

Scale: 3/4" = 1'-0"

A
SB2.2 SB4.6
SB4.5

NOTES:

1. Drawings are for information only and are based on available as-built plans provided by HDOT.
2. The Contractor shall verify if there is a transverse construction joint on either side of the pier.
3. Do not damage existing reinforcing.
4. Remove concrete a minimum of 2" beyond the vertical #10 in Beam "D".

ERIC Y. MATSUMOTO
LICENSED PROFESSIONAL ENGINEER
NO. 10156-S
HAWAII, U.S.A.

THIS WORK WAS PREPARED BY ME OR UNDER MY SUPERVISION.

4-30-24
SIGNATURE EXPIRATION DATE OF THE LICENSE

STATE OF HAWAII
DEPARTMENT OF TRANSPORTATION
HIGHWAYS DIVISION

WAIMALU VIADUCT - OB BEAM
"D" SECTION BETWEEN GIRDERS

INTERSTATE ROUTE H-1 IMPROVEMENTS
Vicinity of Pearl City Viaduct to Waimalu Viaduct
Federal-Aid Project No. NH-HI-1(285)

Scale: As Noted Date: May 2023

SHEET No. SB4.6 OF 7 SHEETS

268

ORIGINAL PLAN
NOTE BOOK No.
SURVEY PLOTTED BY
DRAWN BY
TRACED BY
DESIGNED BY
QUANTITIES BY
CHECKED BY
DATE

DRAWING NAME: Z:\OD ONGOING\22-001-B PEARL CITY VIADUCT REPAIRS\01 CAD\05-23-23 I00PCT\PCVR-SB0401 WV SECT.DWG PLOT TIME: 05-24-23 9:32 AM

FED. ROAD DIST. NO.	STATE	FEDERAL AID PROJ. NO.	FISCAL YEAR	SHEET NO.	TOTAL SHEETS
HAWAII	HAW.	NH-H1-1(285)	2023	269	287

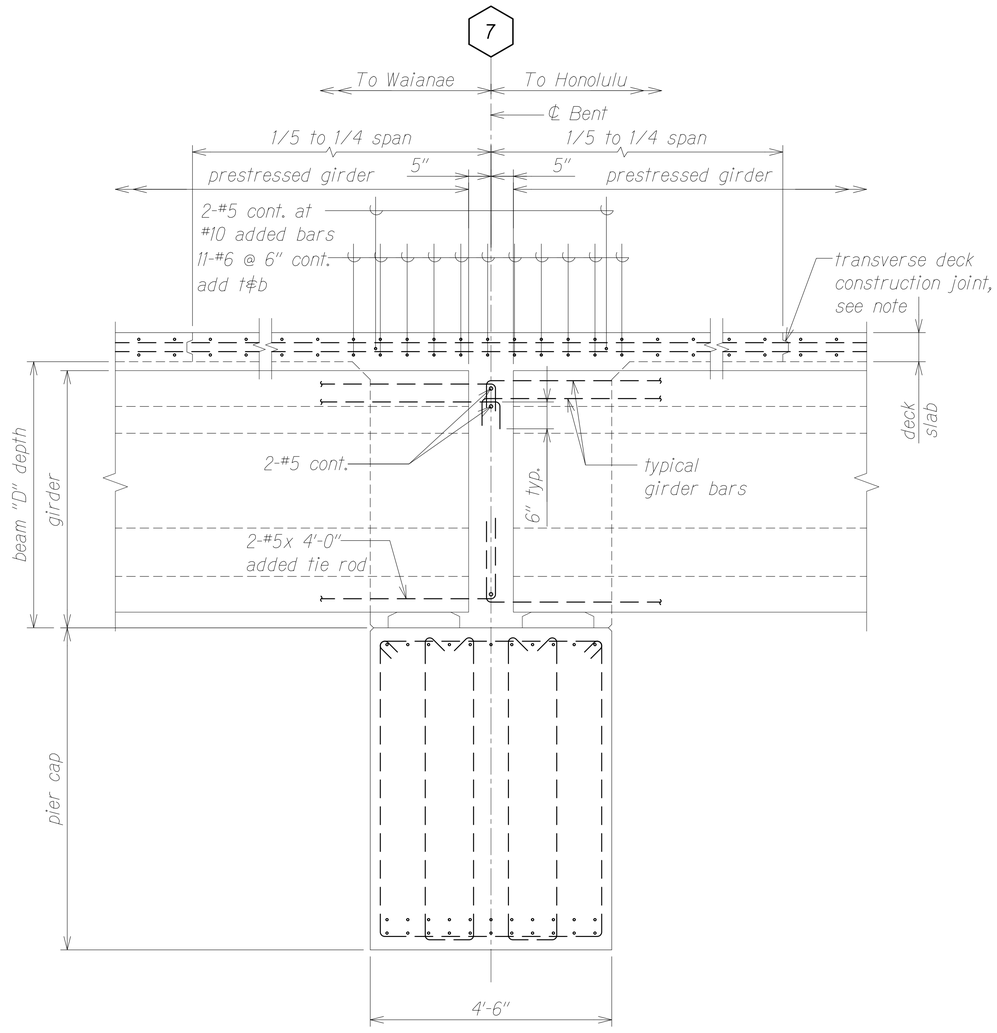

EXISTING REINFORCING

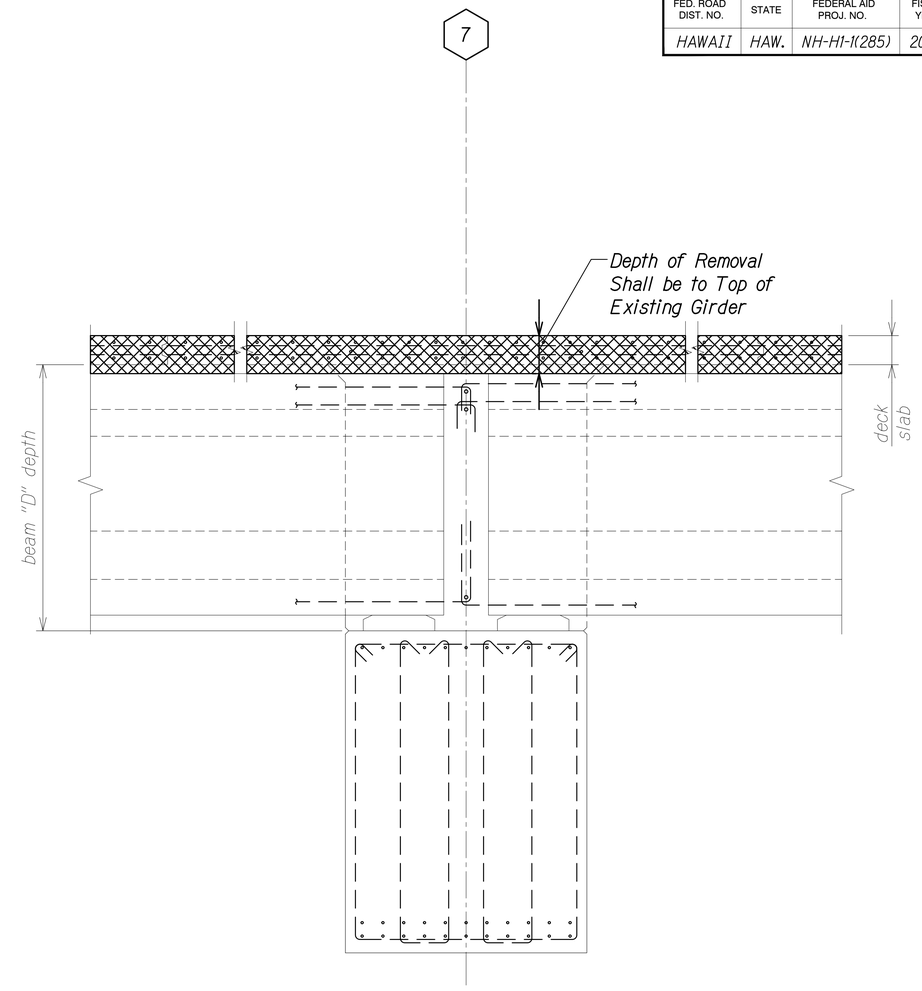

DEMOLITION

NOTES:

1. Drawings are for information only and are based on available as-built plans provided by HDOT.
2. The Contractor shall verify if there is a transverse construction joint on either side of the pier.
3. Do not damage existing reinforcing.

SECTION THRU GIRDERS
AT BEAM "D" - BENT NO. 7
Scale: 3/4" = 1'-0"

A
SB2.2 | SB4.7
SB4.5

ERIC Y. MATSUMOTO
LICENSED PROFESSIONAL ENGINEER
NO. 10156-S
HAWAII, U.S.A.

THIS WORK WAS PREPARED BY ME OR UNDER MY SUPERVISION.

SIGNATURE — EXPIRATION DATE OF THE LICENSE 4-30-24

STATE OF HAWAII
DEPARTMENT OF TRANSPORTATION
HIGHWAYS DIVISION

WAIMALU VIADUCT - OB BEAM
"D" SECTION AT GIRDERS

INTERSTATE ROUTE H-1 IMPROVEMENTS
Vicinity of Pearl City Viaduct to Waimalu Viaduct
Federal-Aid Project No. NH-H1-1(285)

Scale: As Noted Date: May 2023

SHEET No. SB4.7 OF 7 SHEETS

ORIGINAL PLAN	SURVEY PLOTTED BY	DATE
	DRAWN BY	"
	TRACED BY	"
NOTE BOOK	DESIGNED BY	"
	QUANTITIES BY	"
No.	CHECKED BY	"

DRAWING NAME: Z:\OD ONGOING\22-0018 PEARL CITY VIADUCT REPAIRS\01 CAD\05-23-23 100PCT\PCVR-SB0401 WV SECT.DWG PLOT TIME: 05-24-23, 9:32 AM

FED. ROAD DIST. NO.	STATE	FEDERAL AID PROJ. NO.	FISCAL YEAR	SHEET NO.	TOTAL SHEETS
HAWAII	HAW.	NH-H1-1(285)	2023	270	287

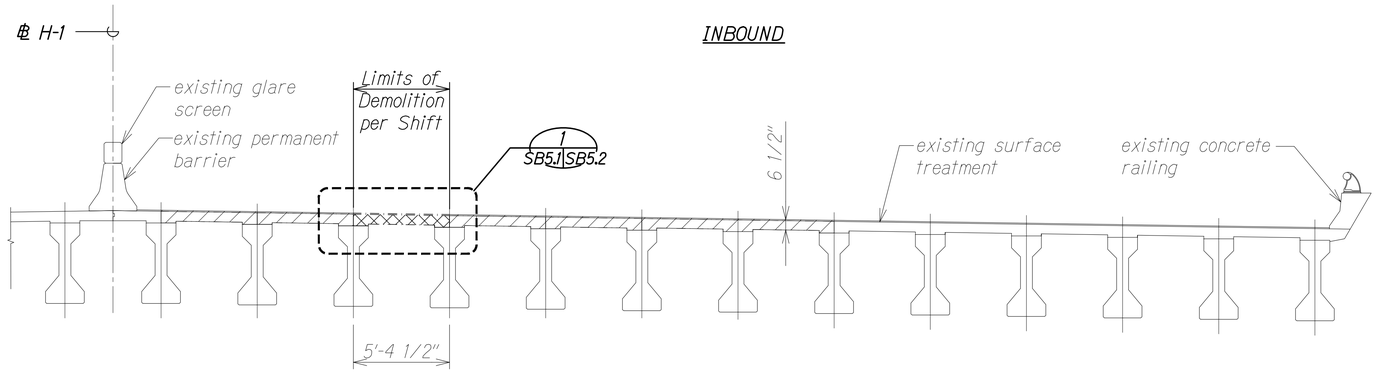

TYPICAL FULL DEPTH IB DEMOLITION TRANSVERSE SECTION

A
SB2.1 SB5.1

Scale: 1/4" = 1'-0"

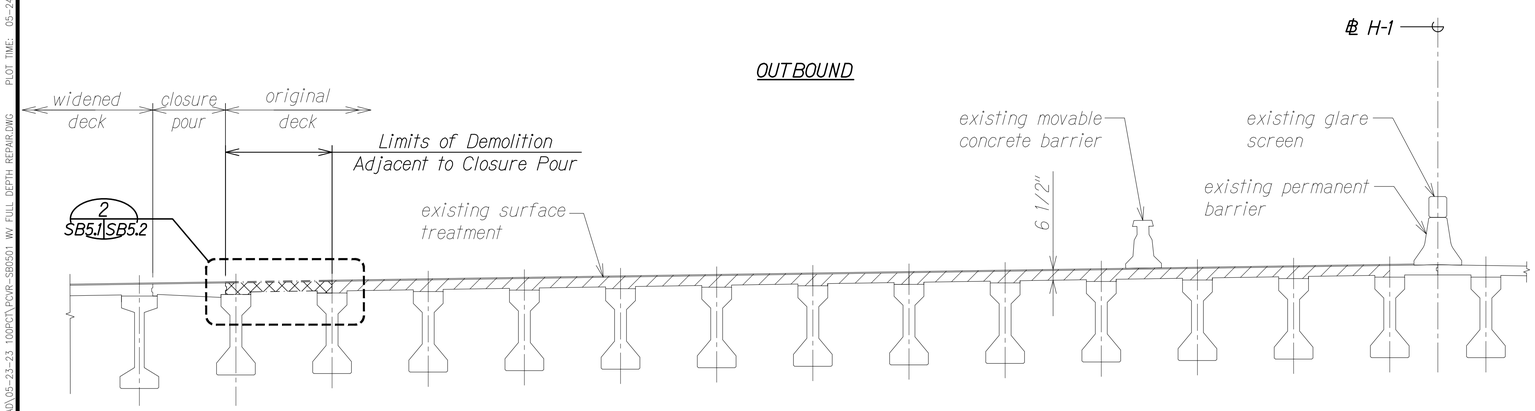

NOTE:

See 1 SB5.1 SB5.2 for interior bay demolition limits.

TYPICAL FULL DEPTH OB DEMOLITION TRANSVERSE SECTION

B
SB2.2 SB5.1

Scale: 1/4" = 1'-0"

LEGEND:

- Defective Concrete to be Removed
- Limits of Concrete Demolition per Shift

NOTES:

1. The Contractor shall submit a Work Plan for all full depth repair work. Work Plan shall follow Special Provisions Section 682 - DEFECTIVE CONCRETE REPAIRS. Work shall not start until the Work Plan has been approved by the Engineer.
2. The Contractor shall not remove more than one (1) bay (transversely) of top deck per shift when performing full depth repairs. A bay is defined as centerline of girder to centerline of girder. The Contractor shall stop work and notify the Engineer immediately if demolition goes past the transverse limits of the bay during full depth repairs. All equipment and vehicles shall be located outside of the bay within the entire span being repaired unless approved by the Engineer.
3. The defective concrete shall be squared by saw-cutting and chipping the concrete at the repair limits. Exercise great care to avoid vibrating, cutting or damaging any existing embedded steel reinforcing. Angles between adjacent sawcuts around the perimeter shall be 90 degrees.
4. The Contractor shall not remove defective concrete from more than one span per shift.
5. The Contractor shall use pneumatic chipping tools weighing 15 lbs. or less or an approved equal within 3 horizontal inches of the repair limits, and 3 vertical inches over girders and beams.
6. Existing concrete surfaces within the repair area shall be roughened to ensure proper adhesion. Follow Special Provision and Manufacturer's Recommendations for further preparation.
7. If any reinforcing steel is observed to have section loss during removal of existing AC patches, removing unsound concrete, or during surface preparation, the Contractor shall follow SA8.2 and the requirements in the Special Provisions.
8. The Contractor shall not perform full depth repair work next to an adjacent bay (transversely) that was repaired within 24 hours unless approved by the Engineer. This shall be detailed in the approved Work Plan.
9. Full depth repair work shall not exceed more than 500 ft^2 per shift.
10. The VESLMC repair material shall be finished to match the existing concrete deck finished grade, and not to the surface treatment.

ERIC Y. MATSUMOTO
LICENSED PROFESSIONAL ENGINEER
NO. 10156-S
HAWAII, U.S.A.

THIS WORK WAS PREPARED BY ME OR UNDER MY SUPERVISION.

SIGNATURE — EXPIRATION DATE OF THE LICENSE 4-30-24

STATE OF HAWAII
DEPARTMENT OF TRANSPORTATION
HIGHWAYS DIVISION

WAIMALU VIADUCT FULL DEPTH CONCRETE DECK REPAIR SECTIONS

INTERSTATE ROUTE H-1 IMPROVEMENTS
Vicinity of Pearl City Viaduct to Waimalu Viaduct
Federal-Aid Project No. NH-H1-1(285)

Scale: As Noted — Date: May 2023

SHEET No. SB5.1 OF 2 SHEETS

ORIGINAL PLAN	SURVEY PLOTTED BY	DATE
	DRAWN BY	
NOTE BOOK	TRACED BY	
	DESIGNED BY	
No.	QUANTITIES BY	
	CHECKED BY	

DRAWING NAME: Z:\00 ONGOING\22-0018 PEARL CITY VIADUCT REPAIRS\01 CAD\05-23-23 100PCT\PCVR-SB0501 WV FULL DEPTH REPAIR.DWG PLOT TIME: 05-24-23, 9:33 AM

FED. ROAD DIST. NO.	STATE	FEDERAL AID PROJ. NO.	FISCAL YEAR	SHEET NO.	TOTAL SHEETS
HAWAII	HAW.	NH-HI-1(285)	2023	271	287

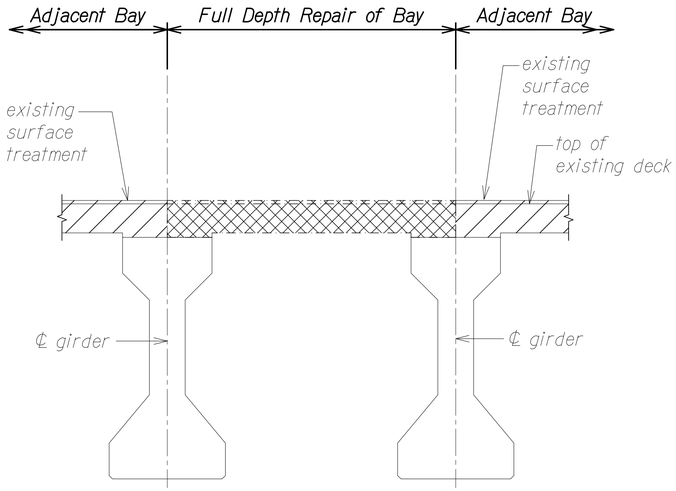

FULL DEPTH DEMOLITION OF IB & OB INTERIOR BAY

1 SB5.1 | SB5.2

Scale: 3/4" = 1'-0"

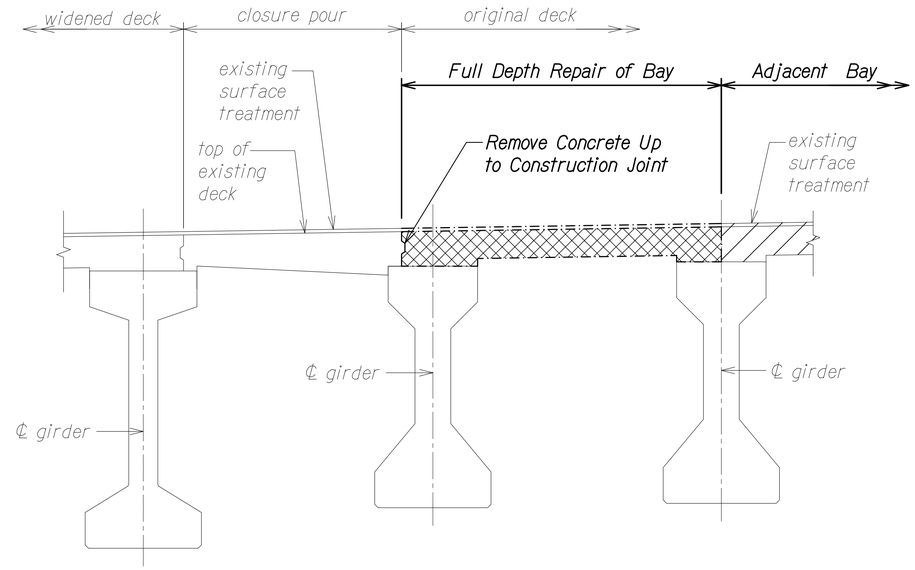

FULL DEPTH DEMOLITION ADJACENT TO OB CLOSURE POUR

2 SB5.1 | SB5.2

Scale: 3/4" = 1'-0"

ERIC Y. MATSUMOTO
LICENSED PROFESSIONAL ENGINEER
NO. 10156-S
HAWAII, U.S.A.

THIS WORK WAS PREPARED BY ME OR UNDER MY SUPERVISION.

SIGNATURE — EXPIRATION DATE OF THE LICENSE 4-30-24

STATE OF HAWAII
DEPARTMENT OF TRANSPORTATION
HIGHWAYS DIVISION

WAIMALU VIADUCT FULL DEPTH CONCRETE DECK REPAIR DETAILS

INTERSTATE ROUTE H-1 IMPROVEMENTS
Vicinity of Pearl City Viaduct to Waimalu Viaduct
Federal-Aid Project No. NH-HI-1(285)

Scale: As Noted — Date: May 2023

SHEET No. SB5.2 OF 2 SHEETS

ORIGINAL PLAN	SURVEY PLOTTED BY	DATE
	DRAWN BY	"
NOTE BOOK	TRACED BY	"
	DESIGNED BY	"
No.	QUANTITIES BY	"
	CHECKED BY	"

DRAWING NAME: Z:\OD ONGOING\22-001.8 PEARL CITY VIADUCT REPAIRS\01 CAD\05-23-23 100PCT\PCVR-SB0502 WV SECT.DWG PLOT TIME: 05-24-23, 9:33 AM

FED. ROAD DIST. NO.	STATE	FEDERAL AID PROJ. NO.	FISCAL YEAR	SHEET NO.	TOTAL SHEETS
HAWAII	HAW.	NH-H1-1(285)	2023	272	287

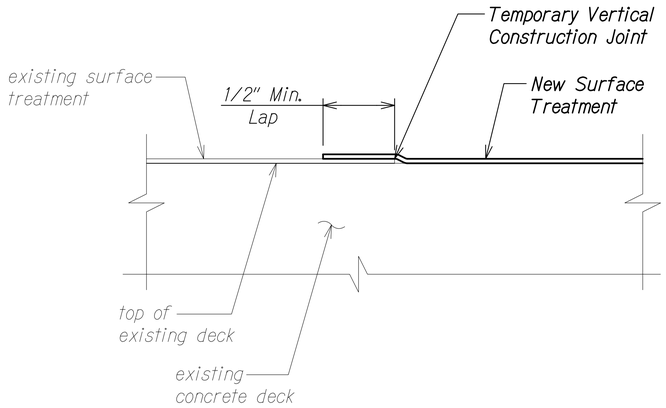

TYPICAL EXISTING SURFACE TREATMENT TO NEW SURFACE TREATMENT LAP

Scale: 6" = 1'-0"

A SB3.1 SB6.1

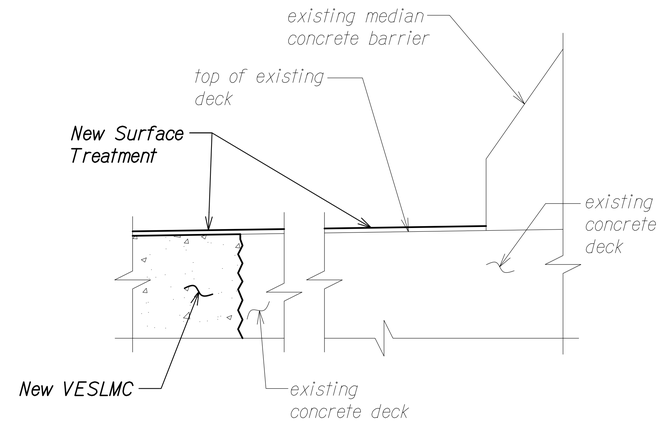

TYPICAL SURFACE TREATMENT AT MEDIAN CONCRETE BARRIER

Scale: 6" = 1'-0"

B SB3.1 SB6.1

NOTES:

1. The Contractor shall submit surface treatment paving and jointing plans for approval.
2. Surface treatment transverse construction joints shall start and end at repair limits, unless approved by the Engineer. This shall be included in the paving plan.
3. Surface treatment lap shall be located at lane striping locations and not in the vehicle wheel path.
4. Surface treatment construction joints shall be straight, neat and smooth.
5. Surface treatment shall not be placed on existing steel L protective nosing.
6. Surface treatment construction joints shall not reflect into the HPC overlay.
7. HPC overlay shall be placed once surface treatment application is completed.

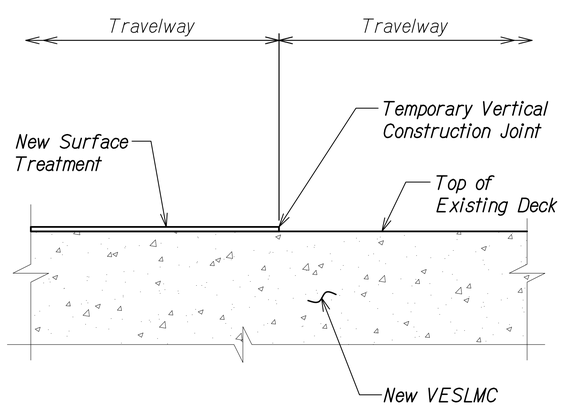

TYPICAL SURFACE TREATMENT LONGITUDINAL CONSTRUCTION JOINT

Scale: 6" = 1'-0"

1 SB6.1 SB6.1

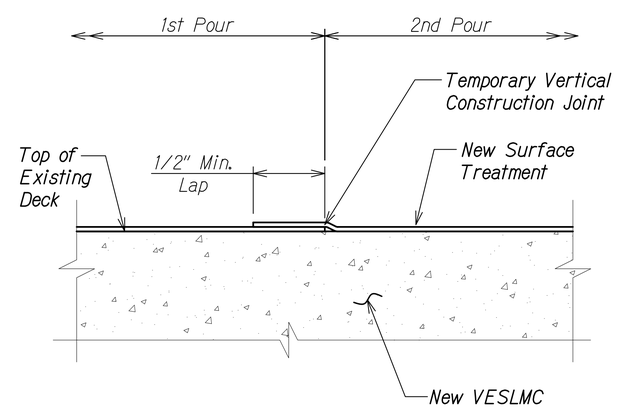

TYPICAL SURFACE TREATMENT LAP AT CONSTRUCTION JOINT

Scale: 6" = 1'-0"

2 SB6.1 SB6.1

ERIC Y. MATSUMOTO
LICENSED PROFESSIONAL ENGINEER
NO. 10156-S
HAWAII, U.S.A.

THIS WORK WAS PREPARED BY ME OR UNDER MY SUPERVISION.

SIGNATURE — EXPIRATION DATE OF THE LICENSE 4-30-24

STATE OF HAWAII
DEPARTMENT OF TRANSPORTATION
HIGHWAYS DIVISION

WAIMALU VIADUCT
SURFACE TREATMENT DETAILS

INTERSTATE ROUTE H-1 IMPROVEMENTS
Vicinity of Pearl City Viaduct to Waimalu Viaduct
Federal-Aid Project No. NH-H1-1(285)

Scale: As Noted — Date: May 2023

SHEET No. SB6.1 OF 11 SHEETS

ORIGINAL PLAN — SURVEY PLOTTED BY — DRAWN BY — TRACED BY — DESIGNED BY — QUANTITIES BY — CHECKED BY — DATE
NOTE BOOK No.

DRAWING NAME: Z:\OD ONGOING\22-001.8 PEARL CITY VIADUCT REPAIRS\01 CAD\05-25-23 1000PCT\PCVR-SB6601 WV SURFACE TRMT DETL.DWG PLOT TIME: 05-24-23, 3:40 PM

FED. ROAD DIST. NO.	STATE	FEDERAL AID PROJ. NO.	FISCAL YEAR	SHEET NO.	TOTAL SHEETS
HAWAII	HAW.	NH-HI-1(285)	2023	273	287

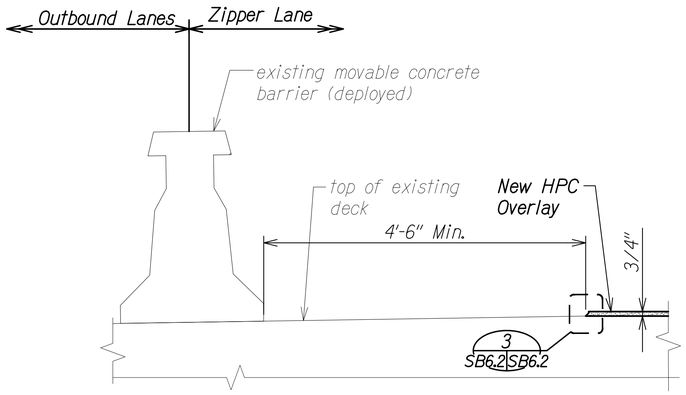

HPC LONGITUDINAL JOINT NEAR EXISTING MOVABLE CONCRETE BARRIER (DEPLOYED)

Scale: 1" = 1'-0"

1 SB6.2 SB6.2

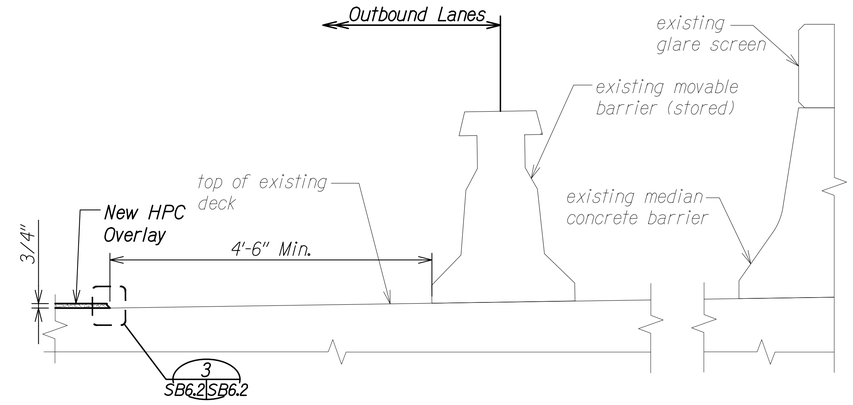

HPC LONGITUDINAL JOINT NEAR EXISTING MOVABLE CONCRETE BARRIER (STORED)

Scale: 1" = 1'-0"

2 SB6.2 SB6.2

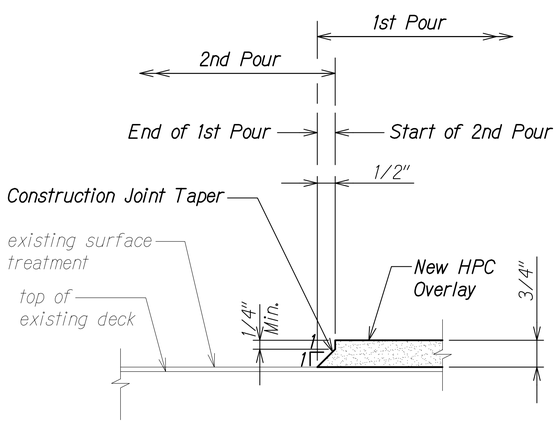

TYPICAL HPC CONSTRUCTION JOINT

Scale: NTS

3 SB6.2 SB6.2

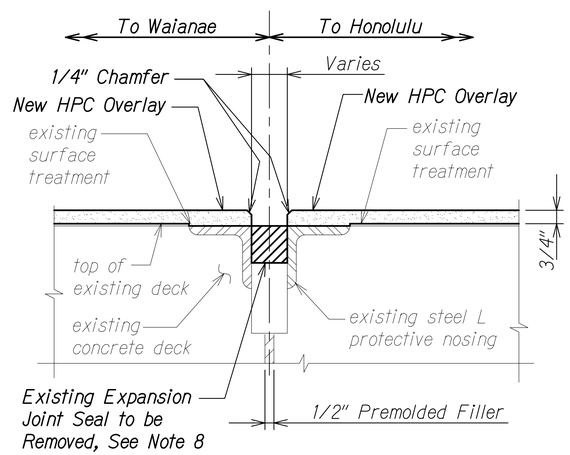

TYPICAL HPC AT EXPANSION JOINT

Scale: 3" = 1'-0"

A SB3.1 SB6.2

NOTES:

1. Anchors for steel L protective nosing at the expansion joint not shown for clarity.
2. The Contractor shall submit HPC paving and jointing plans for approval.
3. Each placement of HPC shall end at an expansion joint, unless otherwise approved by the Engineer.
4. HPC construction joints shall be straight, neat and smooth. The longitudinal construction joints shall not be located within the wheel path.
5. Surface preparation of existing steel L protective nosing shall follow Manufacturer's recommendations.
6. The longitudinal construction joint shall be located a minimum of 4'-6" away from the stored and deployed positions of the Zipper barrier to not conflict with Zipper operations.
7. The Contractor shall re-establish the guideline prior to the nightly deployment of the Zipper barrier.
8. For compression seal replacement, see SB7.1 to SB7.3.

ERIC Y. MATSUMOTO
LICENSED PROFESSIONAL ENGINEER
No. 10156-S
HAWAII, U.S.A.

THIS WORK WAS PREPARED BY ME OR UNDER MY SUPERVISION.

SIGNATURE — EXPIRATION DATE OF THE LICENSE 4-30-24

STATE OF HAWAII
DEPARTMENT OF TRANSPORTATION
HIGHWAYS DIVISION

WAIMALU VIADUCT
HPC OVERLAY DETAILS

INTERSTATE ROUTE H-1 IMPROVEMENTS
Vicinity of Pearl City Viaduct to Waimalu Viaduct
Federal-Aid Project No. NH-HI-1(285)

Scale: As Noted — Date: May 2023

SHEET No. SB6.2 OF 11 SHEETS

ORIGINAL PLAN	SURVEY PLOTTED BY	DATE
	DRAWN BY	
NOTE BOOK	TRACED BY	
	DESIGNED BY	
No.	QUANTITIES BY	
	CHECKED BY	

DRAWING NAME: Z:\OD ONGOING\22-001.8 PEARL CITY VIADUCT REPAIRS\01 CAD\05-25-23 1\GRPCT\PCVR-SB0602 WV HPC OVERLAY DET.DWG PLOT TIME: 05-24-23, 3:41 PM

FED. ROAD DIST. NO.	STATE	FEDERAL AID PROJ. NO.	FISCAL YEAR	SHEET NO.	TOTAL SHEETS
HAWAII	HAW.	NH-HI-1(285)	2023	274	287

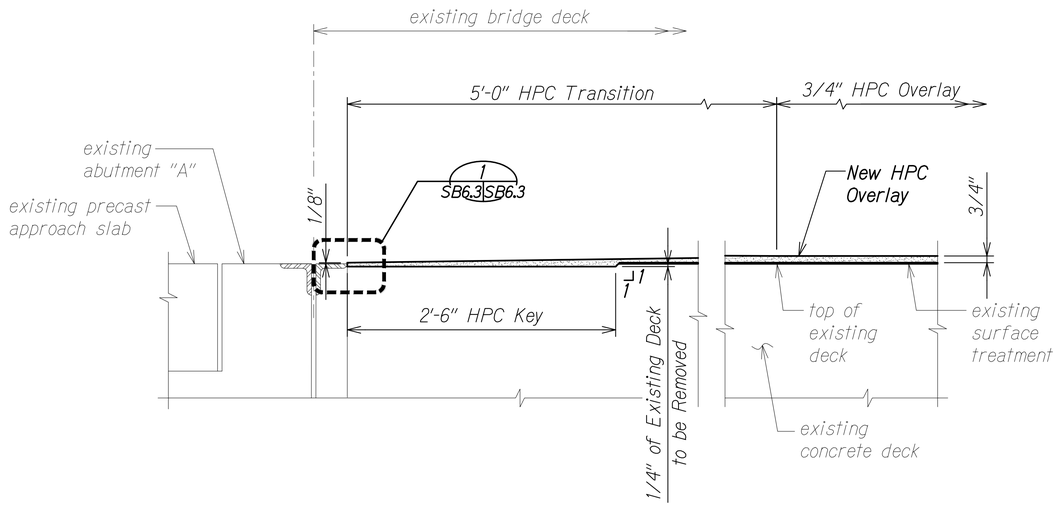

OVERLAY TRANSITION AT ABUTMENT "A"

A SB3.1 SB6.3

Scale: 1 1/2" = 1'-0"

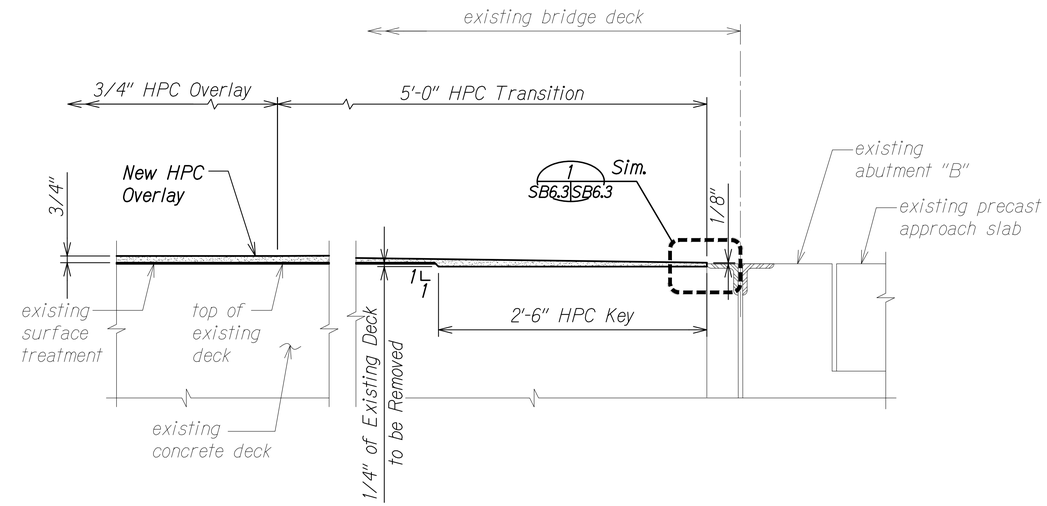

OVERLAY TRANSITION AT ABUTMENT "B"

B SB3.1 SB6.3

Scale: 1 1/2" = 1'-0"

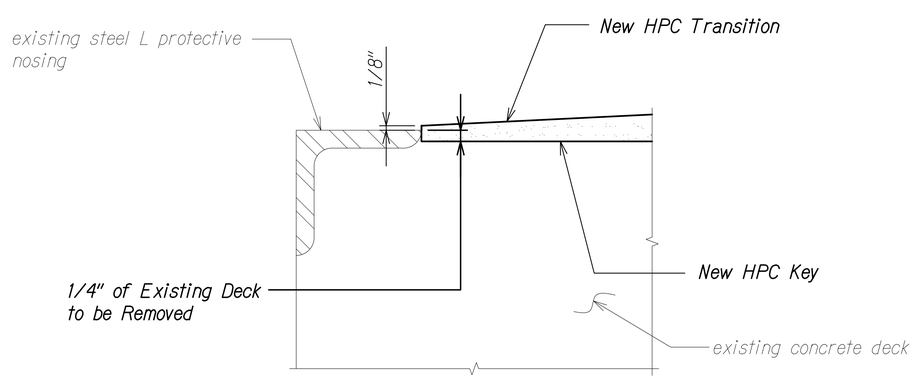

DETAIL

1 SB6.3 SB6.3

Scale: 6" = 1'-0"

NOTES:

1. Anchors for steel L protective nosing at the expansion joint not shown for clarity.
2. The existing concrete substrate for the HPC key shall have a minimum amplitude of 1/8" or a Concrete Surface Profile (CSP) of 7.
3. The Contractor shall not feather edge the HPC.
4. The HPC transition shall be perpendicular to the base line.

ERIC Y. MATSUMOTO
LICENSED PROFESSIONAL ENGINEER
NO. 10156-S
HAWAII, U.S.A.

THIS WORK WAS PREPARED BY ME OR UNDER MY SUPERVISION.

SIGNATURE — EXPIRATION DATE OF THE LICENSE 4-30-24

STATE OF HAWAII
DEPARTMENT OF TRANSPORTATION
HIGHWAYS DIVISION

WAIMALU VIADUCT
HPC OVERLAY TRANSITION DETAILS

INTERSTATE ROUTE H-1 IMPROVEMENTS
Vicinity of Pearl City Viaduct to Waimalu Viaduct
Federal-Aid Project No. NH-HI-1(285)

Scale: As Noted — Date: May 2023

SHEET No. SB6.3 OF 11 SHEETS

ORIGINAL PLAN | NOTE BOOK No. | SURVEY PLOTTED BY | DRAWN BY | TRACED BY | DESIGNED BY | QUANTITIES BY | CHECKED BY | DATE

DRAWING NAME: Z:\OD ONGOING\22-001.8 PEARL CITY VIADUCT REPAIRS\01 CAD\05-25-23 1GRPCT\PCVR-SB6&3 WV OVERLAY DET.DWG PLOT TIME: 05-24-23, 3:42 PM

FED. ROAD DIST. NO.	STATE	FEDERAL AID PROJ. NO.	FISCAL YEAR	SHEET NO.	TOTAL SHEETS
HAWAII	HAW.	NH-HI-1(285)	2023	ADD. 275	287

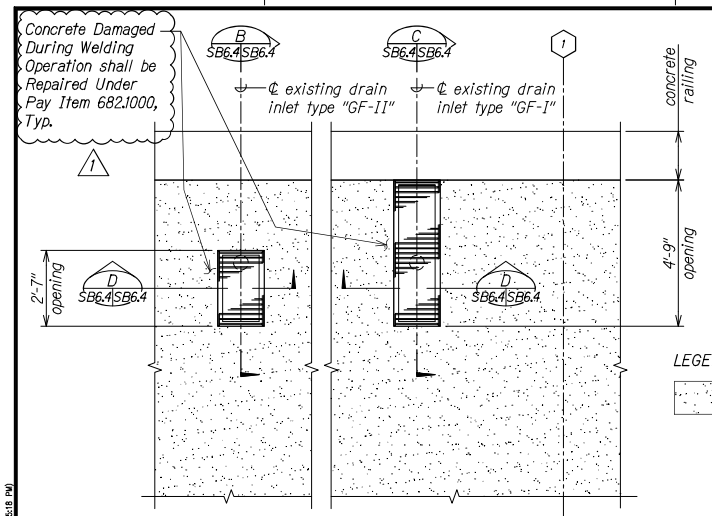

PLAN - IB TYPES "GF-I" AND "GF-II" DECK DRAIN INLET (A SB1.1 SB6.4)

Scale: 1/2" = 1'-0"

LEGEND:

HPC Overlay

EXISTING GRATE REMOVAL NOTE:

The Contractor shall anticipate the existing steel grate to be welded to the existing frame. Removal of the grate shall be performed in a manner that does not damage the existing frame assembly. The Contractor shall submit a detailed removal plan of the grate to the EOR for review and approval prior to the start of work.

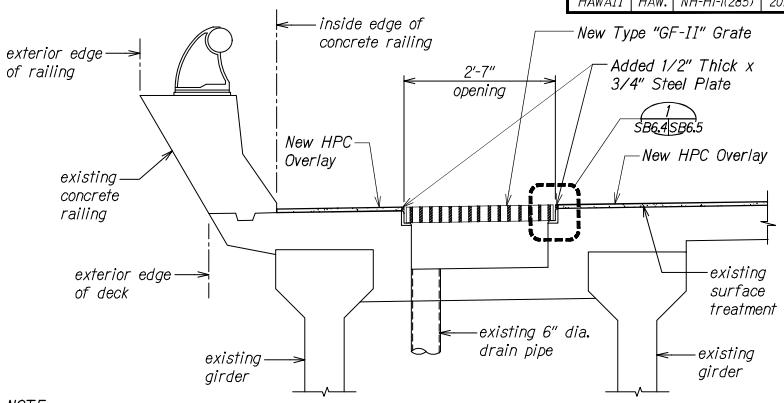

TYPE "GF-II" DI SECTION (B SB6.4 SB6.4)

Scale: 1" = 1'-0"

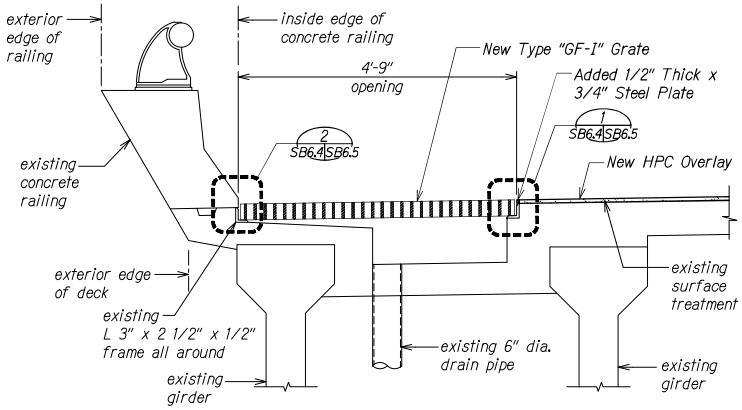

TYPE "GF-I" DI SECTION (C SB6.4 SB6.4)

Scale: 1" = 1'-0"

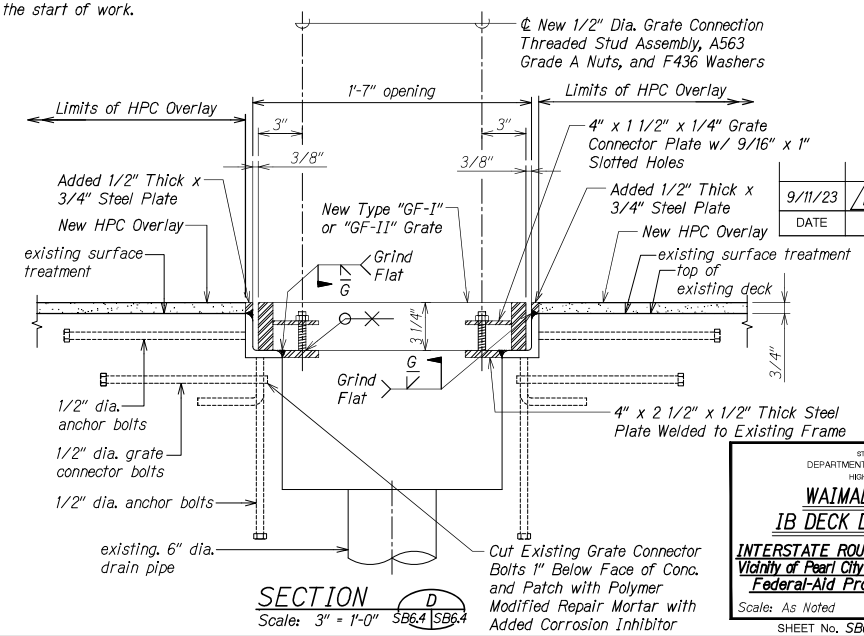

SECTION (D SB6.4 SB6.4)

Scale: 3" = 1'-0"

DATE	REVISION
9/11/23	1 Added Note

ERIC Y. MATSUMOTO LICENSED PROFESSIONAL ENGINEER NO. 10156-S HAWAII, U.S.A.

THIS WORK WAS PREPARED BY ME OR UNDER MY SUPERVISION.

SIGNATURE — EXPIRATION DATE OF THE LICENSE 4-30-24

STATE OF HAWAII
DEPARTMENT OF TRANSPORTATION
HIGHWAYS DIVISION

WAIMALU VIADUCT
IB DECK DRAIN DETAILS

INTERSTATE ROUTE H-1 IMPROVEMENTS
Vicinity of Pearl City Viaduct to Waimalu Viaduct
Federal-Aid Project No. NH-HI-1(285)

Scale: As Noted — Date: May 2023

SHEET No. SB6.4 OF 11 SHEETS

ADD. 275

ORIGINAL PLAN — NOTE BOOK No. — HISTORY: PLOTTED BY — DRAWN BY — TRACED BY — DESIGNED BY — QUANTITIES BY — CHECKED BY — DATE

DRAWING NAME: Z:\00 ONGOING\Z2-001.3 PEARL CITY VIADUCT REPAIRS\01 CAD\09-11-23 TOPICT ADD1\PCVR-SB06A1 WV OVERLAY DRN DET ADD1.DWG PLOT TIME: 09-11-23, 5:18 PM

FED. ROAD DIST. NO.	STATE	FEDERAL AID PROJ. NO.	FISCAL YEAR	SHEET NO.	TOTAL SHEETS
HAWAII	HAW.	NH-HI-1(285)	2023	276	287

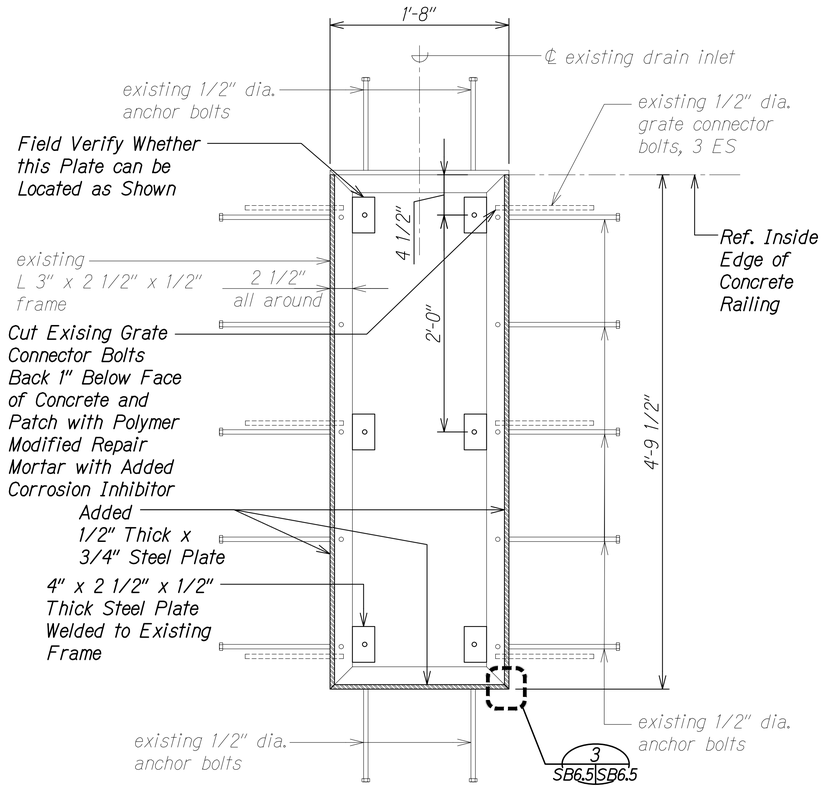

TYPE "GF-I" FRAME PLAN (A, SB6.5 | SB6.5)
Scale: 1 1/2" = 1'-0"

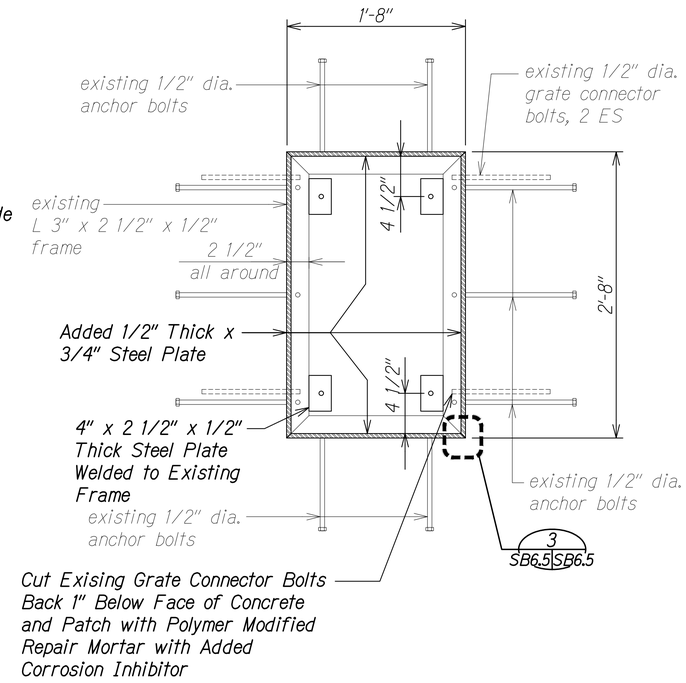

TYPE "GF-II" FRAME PLAN (B, SB6.5 | SB6.5)
Scale: 1 1/2" = 1'-0"

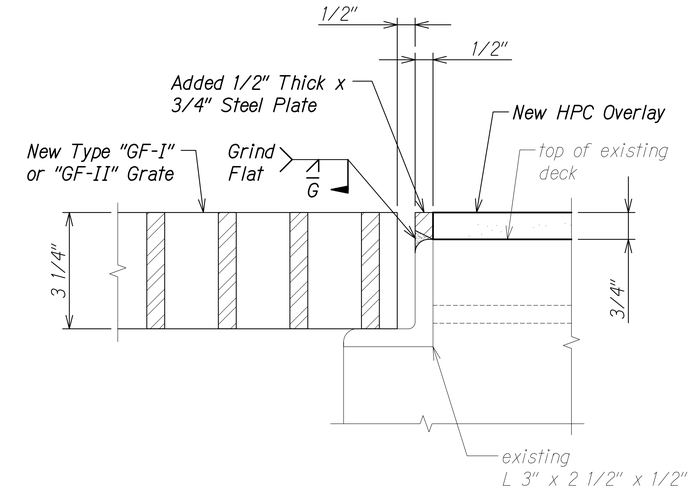

DETAIL (1, SB6.4 | SB6.5)
Scale: 6" = 1'-0"

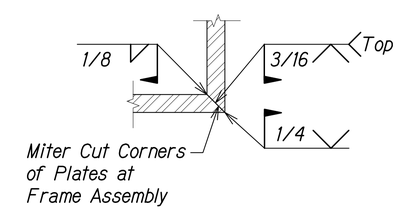

DETAIL (3, SB6.5 | SB6.5)
Scale: 6" = 1'-0"

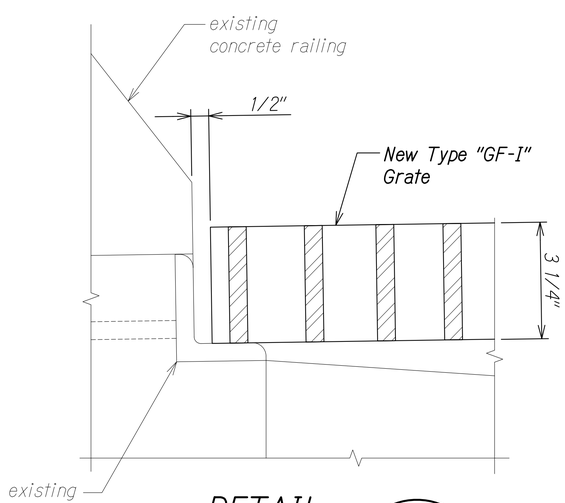

DETAIL (2, SB6.4 | SB6.5)
Scale: 6" = 1'-0"

FRAME MODIFICATION NOTES:

1. These notes shall apply to all details within the SB6 series, unless otherwise noted.
2. New steel plates shall be delivered with threaded connector studs pre-welded to the plate. All new steel plate assemblies shall be delivered hot-dip zinc galvanized, after fabrication, in accordance with ASTM A123.
3. Bevel/Prepare edge of plate as required by the weld details.
4. Remove zinc galvanizing from new steel plate and existing steel angle within 1/2" from the welded edge.
5. Weld new plate to existing angle. Grind welds flat. Remove all weld flux residue and weld splatter.
6. Clean welded surface using water blasting (min. 3,000 psi).
7. Prepare surface of steel in accordance with SSPC-SP16 Brush-Off Blast Cleaning and SSPC-SP1 Solvent Cleaning. Ensure that brush-off blast cleaning does not damage existing zinc galvanizing to remain.
8. Repair all welded surfaces and damaged galvanized zinc using a zinc-based solder in strict accordance with ASTM A780 paying particular attention to preheat temperature, wire brushing, and uniform deposition of zinc requirements. The minimum average zinc thickness shall be 3.9 mils. The average thickness shall be based on a minimum of five measurements on a specimen.
9. Clean out exist. drain pipes. Work shall be incidental to the respective pay items as shown on the proposal schedule.

ERIC Y. MATSUMOTO
LICENSED PROFESSIONAL ENGINEER
NO. 10156-S
HAWAII, U.S.A.

THIS WORK WAS PREPARED BY ME OR UNDER MY SUPERVISION.

SIGNATURE — EXPIRATION DATE OF THE LICENSE 4-30-24

STATE OF HAWAII
DEPARTMENT OF TRANSPORTATION
HIGHWAYS DIVISION

WAIMALU VIADUCT
IB DI FRAME DETAILS

INTERSTATE ROUTE H-1 IMPROVEMENTS
Vicinity of Pearl City Viaduct to Waimalu Viaduct
Federal-Aid Project No. NH-HI-1(285)

Scale: As Noted — Date: May 2023

SHEET No. SB6.5 OF 11 SHEETS

ORIGINAL PLAN — SURVEY PLOTTED BY — DRAWN BY — TRACED BY — DESIGNED BY — QUANTITIES BY — CHECKED BY — DATE
NOTE BOOK No.

DRAWING NAME: Z:\02 ONGOING\22-001.8 PEARL CITY VIADUCT REPAIRS\01 CAD\05-23-23 1GDPCT\PCVR-SB6604 WV OVERLAY DRN DET.DWG PLOT TIME: 05-24-23, 9:36 AM

FED. ROAD DIST. NO.	STATE	FEDERAL AID PROJ. NO.	FISCAL YEAR	SHEET NO.	TOTAL SHEETS
HAWAII	HAW.	NH-HI-1(285)	2023	277	287

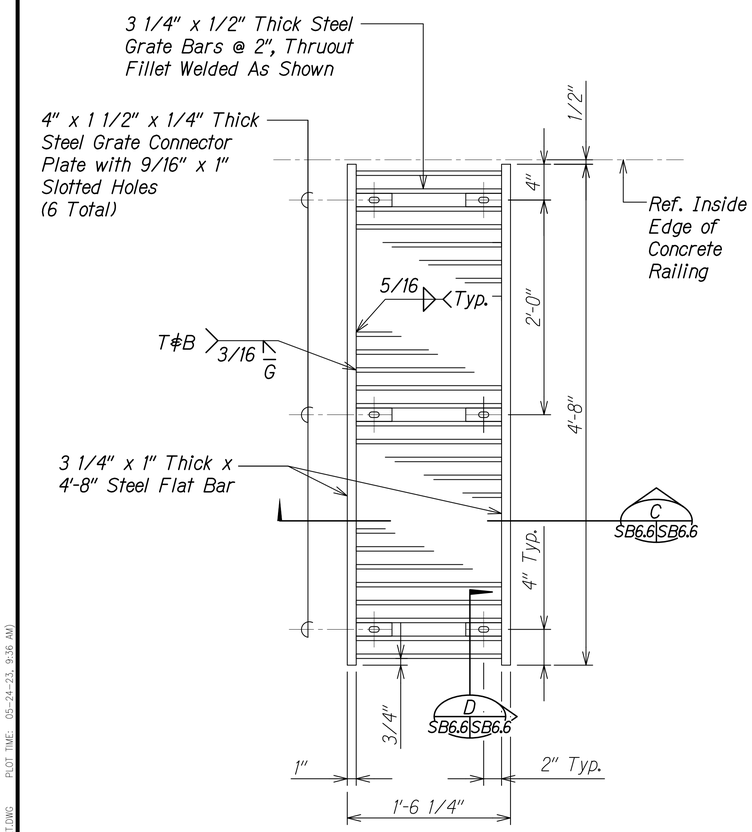

NEW TYPE "GF-I" GRATE PLAN (A, SB6.6 SB6.6)

Scale: 1 1/2" = 1'-0"

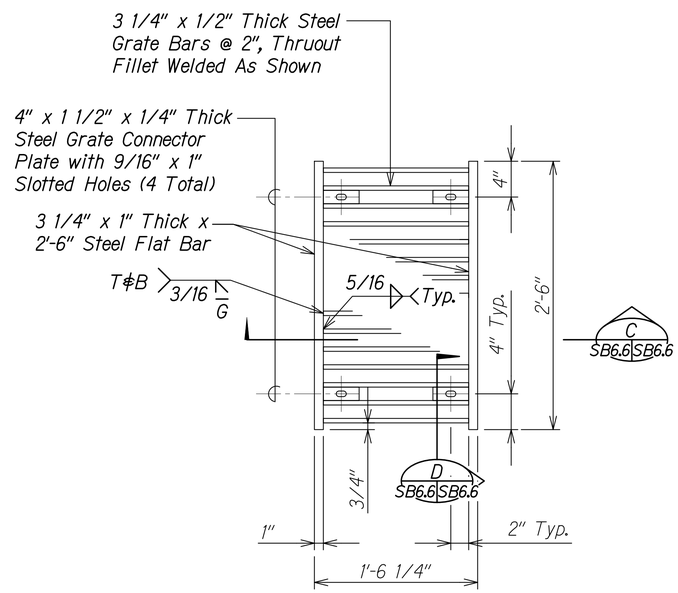

NEW TYPE "GF-II" GRATE PLAN (B, SB6.6 SB6.6)

Scale: 1 1/2" = 1'-0"

NOTES:

1. Shop drawings for grating shall be submitted to the Engineer for acceptance.
2. Prior to preparation of shop drawings, the Contractor shall field measure the existing frame opening size for every drain inlet. Submit any discrepancies to the Engineer for review.
3. Entire grating assemblage shall be hot-dip zinc galvanized in accordance with ASTM A123.
4. All loose hardware, including bolts, nuts, and washer shall be hot-dip zinc galvanized in accordance with ASTM A153.

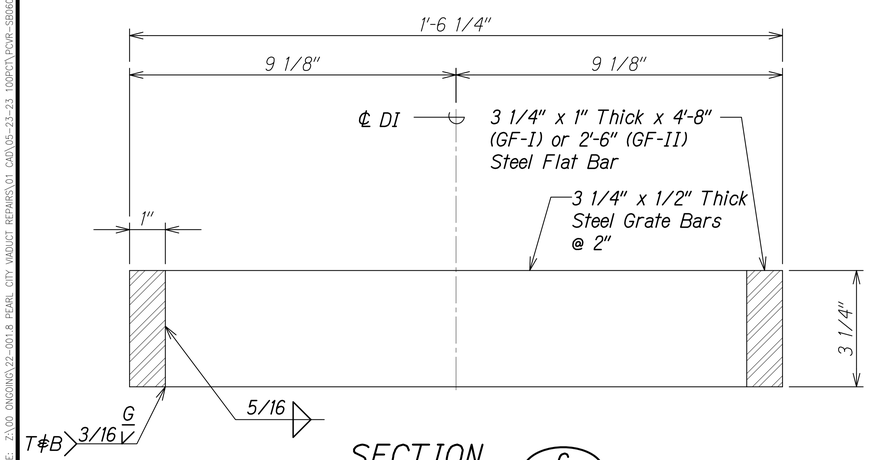

SECTION (C, SB6.6 SB6.6)

Scale: 6" = 1'-0"

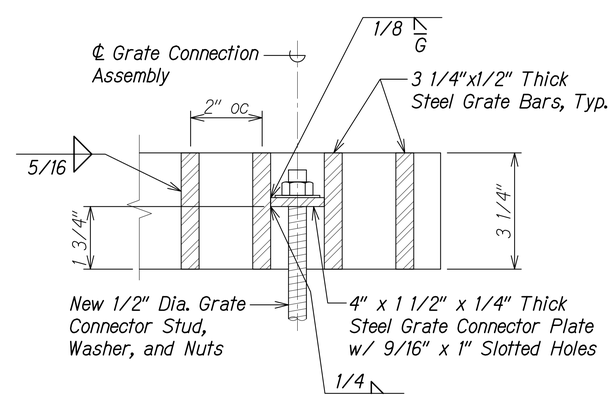

SECTION (D, SB6.6 SB6.6)

Scale: 6" = 1'-0"

ERIC Y. MATSUMOTO
LICENSED PROFESSIONAL ENGINEER
NO. 10156-S
HAWAII, U.S.A.

THIS WORK WAS PREPARED BY ME OR UNDER MY SUPERVISION.

SIGNATURE — EXPIRATION DATE OF THE LICENSE 4-30-24

STATE OF HAWAII
DEPARTMENT OF TRANSPORTATION
HIGHWAYS DIVISION

WAIMALU VIADUCT
IB DI GRATE DETAILS

INTERSTATE ROUTE H-1 IMPROVEMENTS
Vicinity of Pearl City Viaduct to Waimalu Viaduct
Federal-Aid Project No. NH-HI-1(285)

Scale: As Noted — Date: May 2023

SHEET No. SB6.6 OF 11 SHEETS

ORIGINAL PLAN — SURVEY PLOTTED BY / DRAWN BY / TRACED BY / DESIGNED BY / QUANTITIES BY / CHECKED BY / DATE — NOTE BOOK No.

DRAWING NAME: Z:\OD ONGOING\22-001 & PEARL CITY VIADUCT REPAIRS\01 CAD\05-23-23 100PCT\PCVR-SB6624 WV OVERLAY DRN DET.DWG PLOT TIME: 05-24-23, 9:36 AM

FED. ROAD DIST. NO.	STATE	FEDERAL AID PROJ. NO.	FISCAL YEAR	SHEET NO.	TOTAL SHEETS
HAWAII	HAW.	NH-HI-1(285)	2023	ADD. 278	287

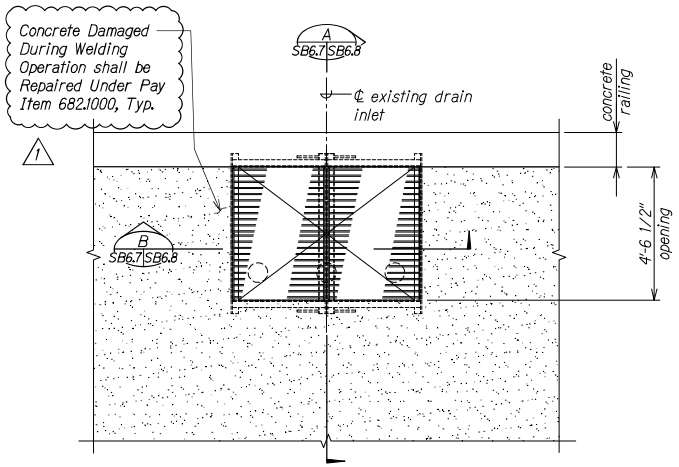

PLAN - OB TYPE "B4-W" DECK DRAIN INLET (A SB6.7 SB6.7)

Scale: 1/2" = 1'-0"

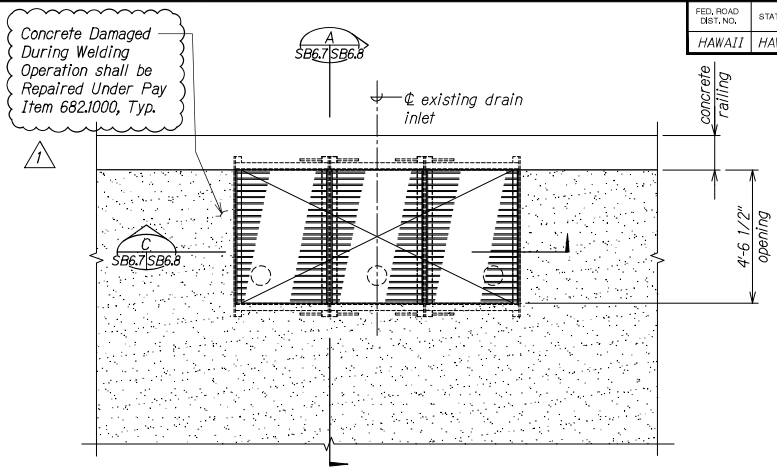

PLAN - OB TYPE "B6" DECK DRAIN INLET (A SB6.7 SB6.7)

Scale: 1/2" = 1'-0"

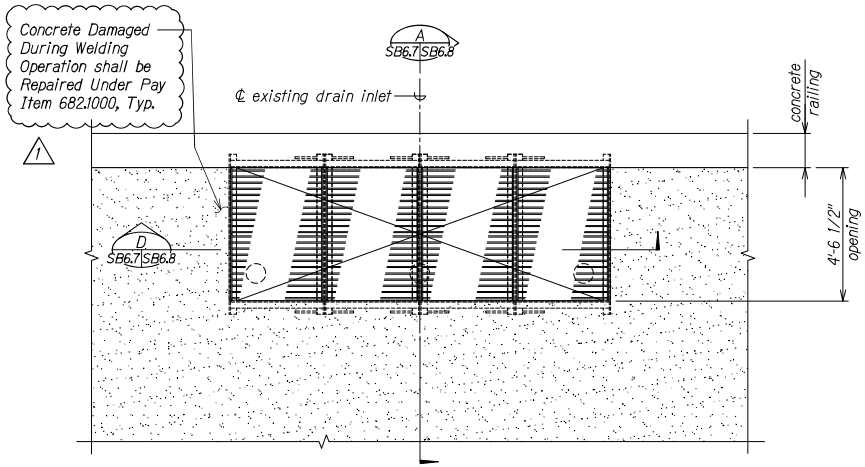

PLAN - OB TYPE "B8" DECK DRAIN INLET (A SB6.7 SB6.7)

Scale: 1/2" = 1'-0"

LEGEND:

HPC Overlay

DATE		REVISION
9/11/23	1	Added Note

ERIC Y. MATSUMOTO
LICENSED PROFESSIONAL ENGINEER
NO. 10156-S
HAWAII, U.S.A.

THIS WORK WAS PREPARED BY ME OR UNDER MY SUPERVISION.

SIGNATURE — EXPIRATION DATE OF THE LICENSE 4-30-24

STATE OF HAWAII
DEPARTMENT OF TRANSPORTATION
HIGHWAYS DIVISION

WAIMALU VIADUCT
OB DECK DRAIN DETAILS

INTERSTATE ROUTE H-1 IMPROVEMENTS
Vicinity of Pearl City Viaduct to Waimalu Viaduct
Federal-Aid Project No. NH-HI-1(285)

Scale: As Noted — Date: May 2023

SHEET No. SB6.7 OF 11 SHEETS

ADD. 278

ORIGINAL PLAN | NOTE BOOK No. | HISTORY: PLOTTED BY | DRAWN BY | TRACED BY | DESIGNED BY | QUANTITIES BY | CHECKED BY | DATE

DRAWING NAME: Z:\00 ONGOING\22-001.3 PEARL CITY VIADUCT REPAIRS\01 CAD\09-11-23 100PCT ADD\PCVR-SB06A WV OVERLAY DRN DET ADD1.DWG PLOT TIME: 09-11-23, 5:19 PM

FED. ROAD DIST. NO.	STATE	FEDERAL AID PROJ. NO.	FISCAL YEAR	SHEET NO.	TOTAL SHEETS
HAWAII	HAW.	NH-H1-1(285)	2023	279	287

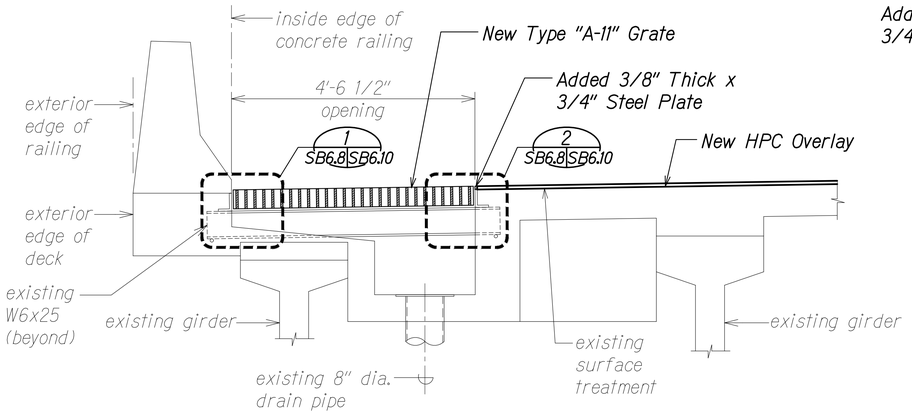

TYPE "B4-W" DI SECTION (SAME AT DI TYPE "B6" & "B8")

A SB6.7 SB6.8

Scale: 3/4" = 1'-0"

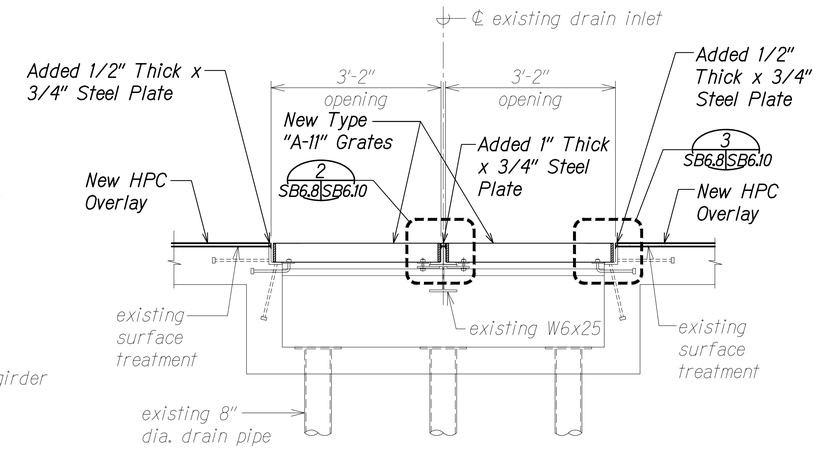

SECTION AT DRAIN TYPE "B4-W" DI

B SB6.7 SB6.8

Scale: 3/4" = 1'-0"

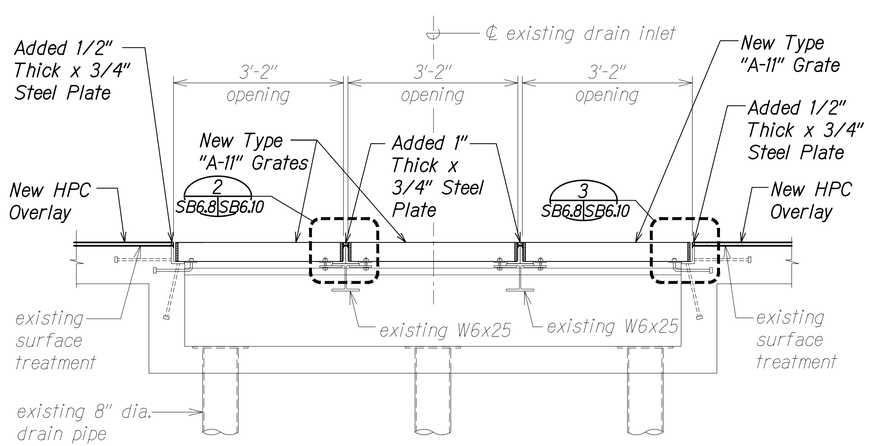

SECTION AT DRAIN TYPE "B6" DI

C SB6.7 SB6.8

Scale: 3/4" = 1'-0"

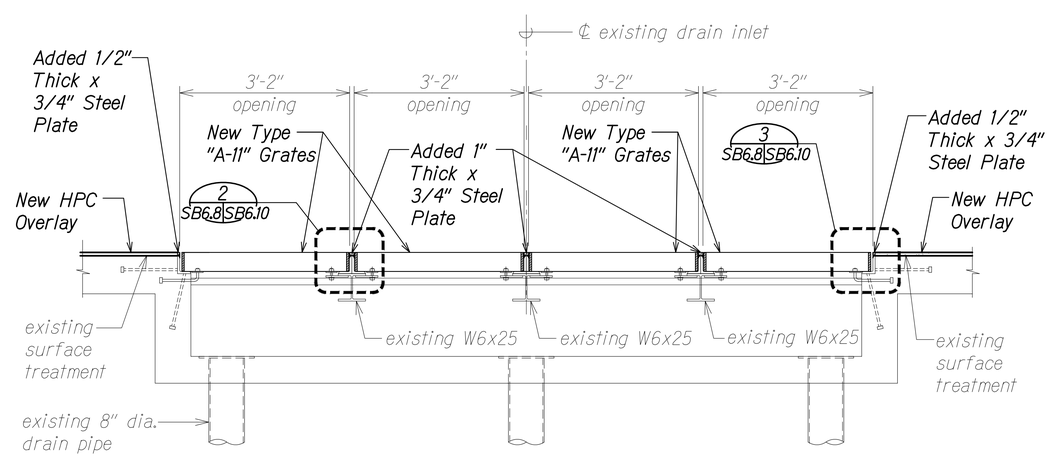

SECTION AT DRAIN TYPE "B8" DI

D SB6.7 SB6.8

Scale: 3/4" = 1'-0"

ERIC Y. MATSUMOTO
LICENSED PROFESSIONAL ENGINEER
NO. 10156-S
HAWAII, U.S.A.

THIS WORK WAS PREPARED BY ME OR UNDER MY SUPERVISION.

SIGNATURE — EXPIRATION DATE OF THE LICENSE 4-30-24

STATE OF HAWAII
DEPARTMENT OF TRANSPORTATION
HIGHWAYS DIVISION

WAIMALU VIADUCT
OB DI GRATE DETAILS

INTERSTATE ROUTE H-1 IMPROVEMENTS
Vicinity of Pearl City Viaduct to Waimalu Viaduct
Federal-Aid Project No. NH-H1-1(285)

Scale: As Noted — Date: May 2023

SHEET No. SB6.8 OF 11 SHEETS

ORIGINAL PLAN	SURVEY PLOTTED BY	DATE
	DRAWN BY	
NOTE BOOK	TRACED BY	
	DESIGNED BY	
	QUANTITIES BY	
No.	CHECKED BY	

DRAWING NAME: Z:\OD ENGING\22-001.8 PEARL CITY VIADUCT REPAIRS\01 CAD\05-23-23 1GRPCT\PCVR-SB6&8 WV OVERLAY DRN DET.DWG PLOT TIME: 05-24-23, 9:37 AM

FED. ROAD DIST. NO.	STATE	FEDERAL AID PROJ. NO.	FISCAL YEAR	SHEET NO.	TOTAL SHEETS
HAWAII	HAW.	NH-HI-1(285)	2023	280	287

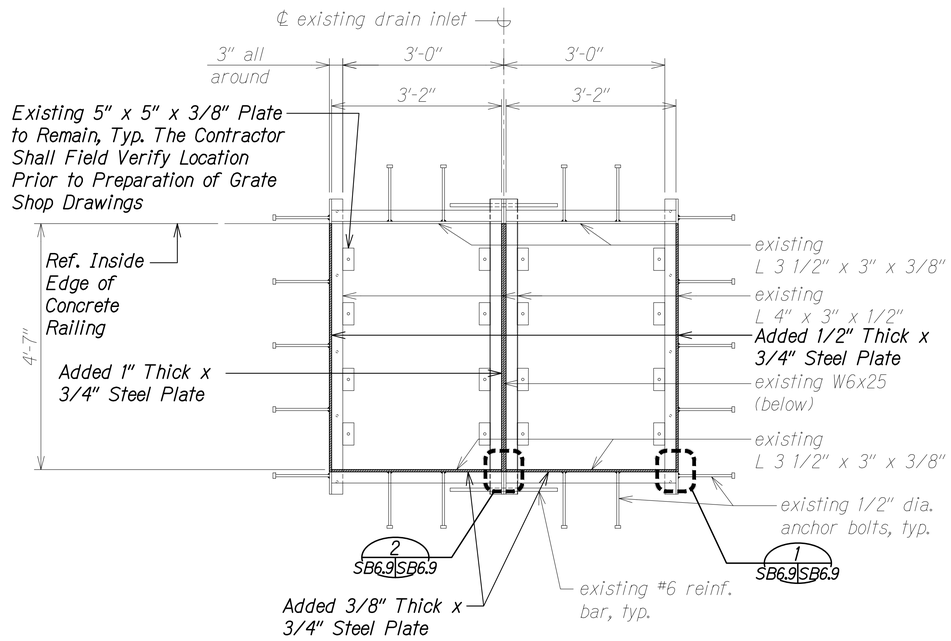

TYPE "B4" DI FRAME PLAN (A SB6.9 SB6.9)

Scale: 3/4" = 1'-0"

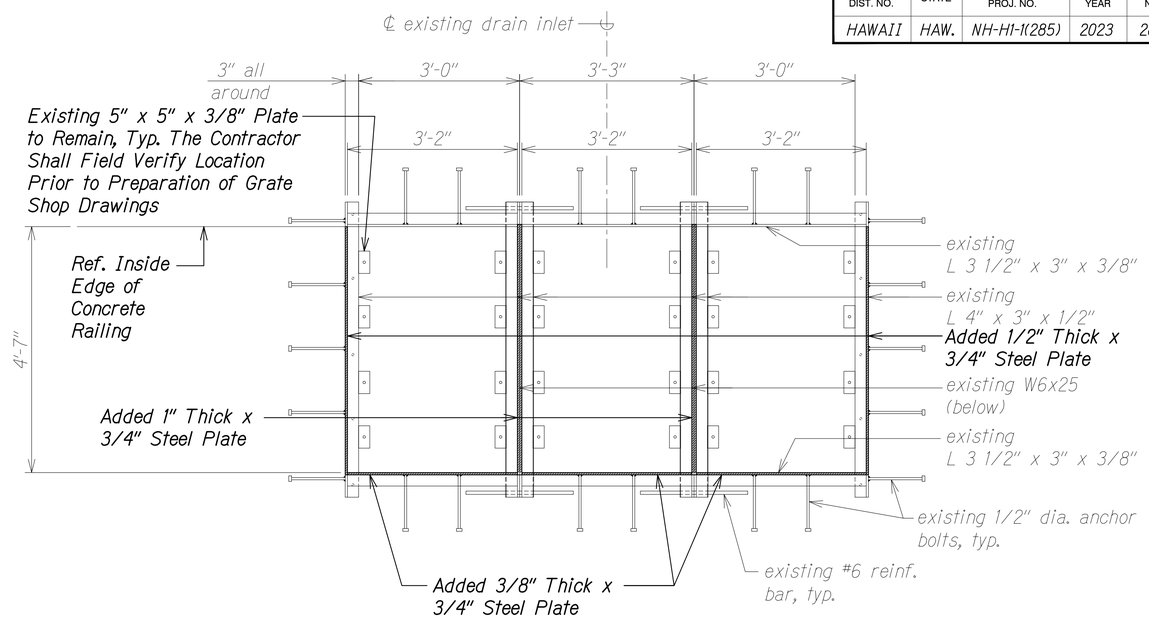

TYPE "B6" DI FRAME PLAN (B SB6.9 SB6.9)

Scale: 3/4" = 1'-0"

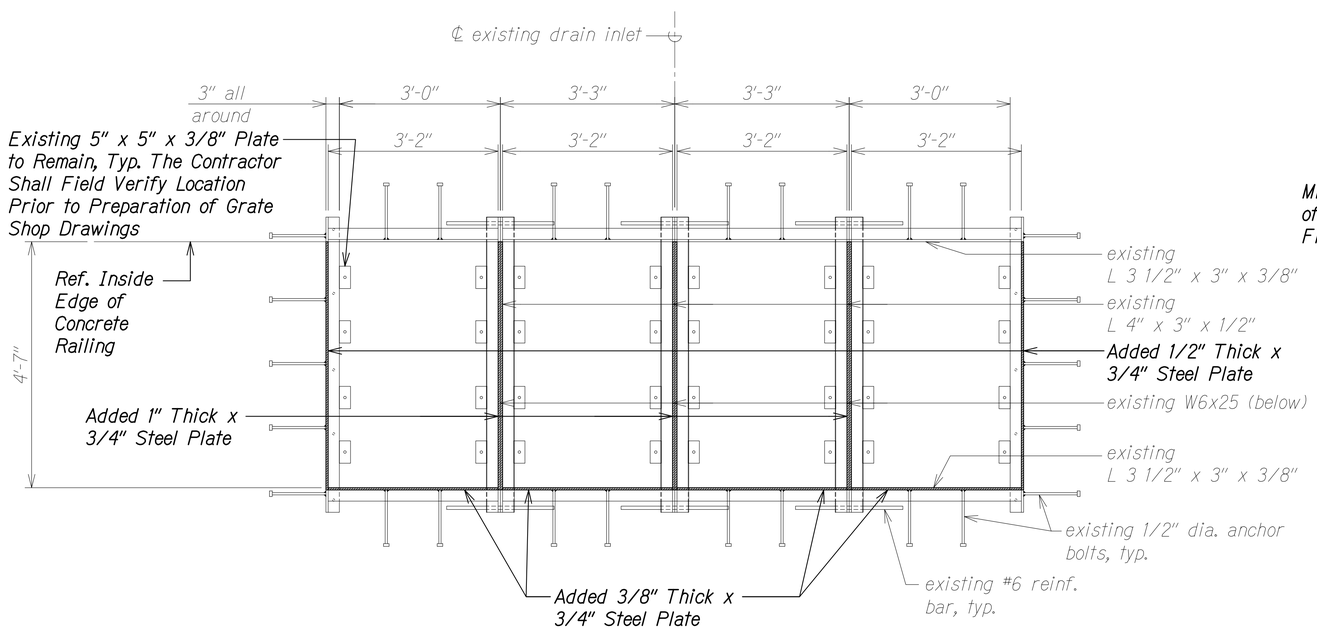

TYPE "B8" DI FRAME PLAN (C SB6.9 SB6.9)

Scale: 3/4" = 1'-0"

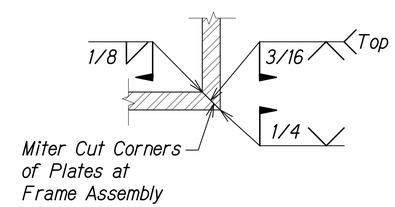

DETAIL (1 SB6.9 SB6.9)

Scale: 6" = 1'-0"

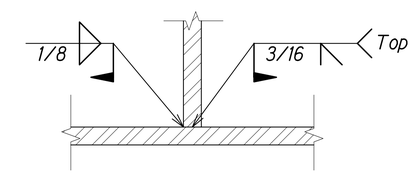

DETAIL (2 SB6.9 SB6.9)

Scale: 6" = 1'-0"

ERIC Y. MATSUMOTO
LICENSED PROFESSIONAL ENGINEER
NO. 10156-S
HAWAII, U.S.A.

THIS WORK WAS PREPARED BY ME OR UNDER MY SUPERVISION.

SIGNATURE — EXPIRATION DATE OF THE LICENSE 4-30-24

STATE OF HAWAII
DEPARTMENT OF TRANSPORTATION
HIGHWAYS DIVISION

WAIMALU VIADUCT
OB DI FRAME DETAILS

INTERSTATE ROUTE H-1 IMPROVEMENTS
Vicinity of Pearl City Viaduct to Waimalu Viaduct
Federal-Aid Project No. NH-HI-1(285)

Scale: As Noted — Date: May 2023

SHEET No. SB6.9 OF 11 SHEETS

ORIGINAL PLAN	SURVEY PLOTTED BY	DATE
	DRAWN BY	
NOTE BOOK	TRACED BY	
	DESIGNED BY	
	QUANTITIES BY	
No.	CHECKED BY	

DRAWING NAME: Z:\OD ONGOING\22-001.8 PEARL CITY VIADUCT REPAIRS\01 CAD\05-23-23 1GRPCT\PCVR-SB6604 WV OVERLAY DRN DET.DWG PLOT TIME: 05-24-23, 9:37 AM

FED. ROAD DIST. NO.	STATE	FEDERAL AID PROJ. NO.	FISCAL YEAR	SHEET NO.	TOTAL SHEETS
HAWAII	HAW.	NH-H1-1(285)	2023	281	287

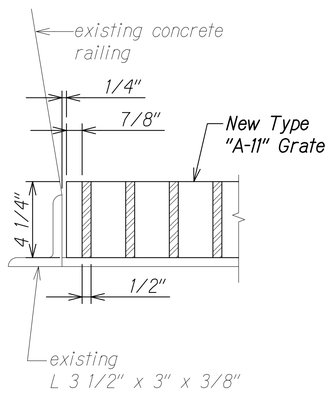

DETAIL 1
Scale: 3" = 1'-0" SB6.8 SB6.10

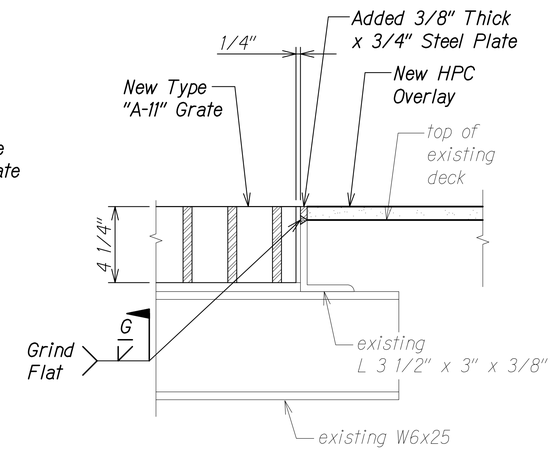

DETAIL 2
Scale: 3" = 1'-0" SB6.8 SB6.10

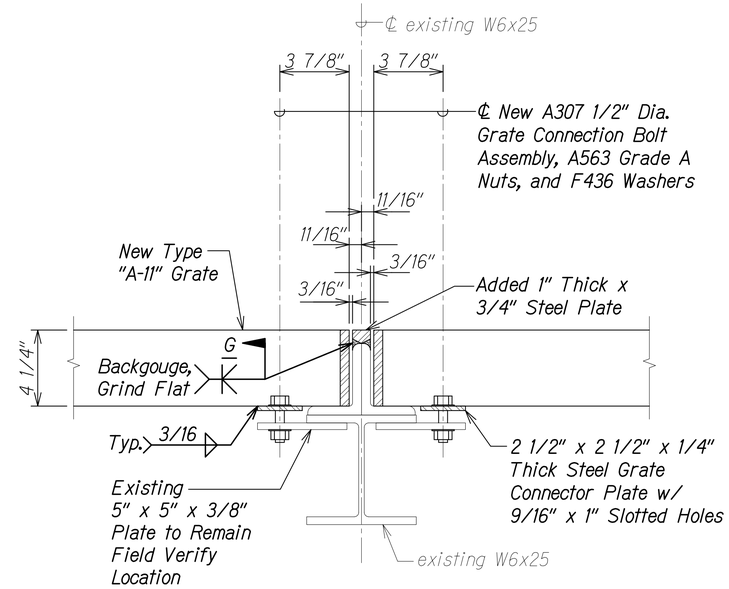

DETAIL 3
Scale: 3" = 1'-0" SB6.8 SB6.10

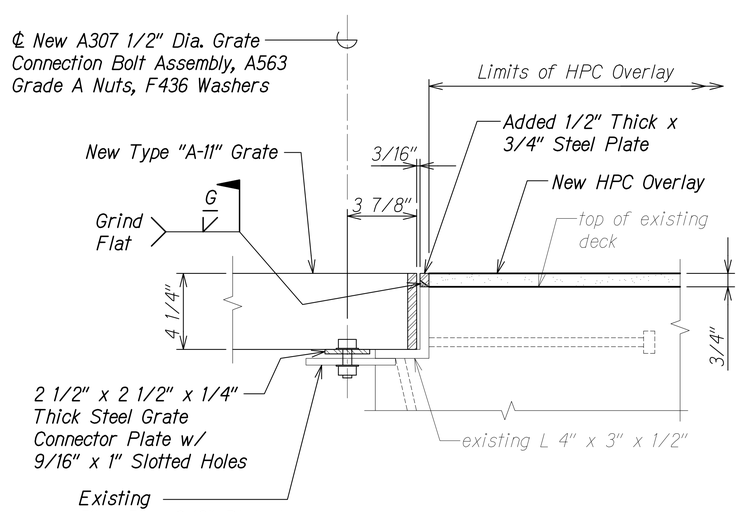

DETAIL 4
Scale: 3" = 1'-0" SB6.8 SB6.10

ERIC Y. MATSUMOTO
LICENSED PROFESSIONAL ENGINEER
NO. 10156-S
HAWAII, U.S.A.

THIS WORK WAS PREPARED BY ME OR UNDER MY SUPERVISION.

SIGNATURE — EXPIRATION DATE OF THE LICENSE 4-30-24

STATE OF HAWAII
DEPARTMENT OF TRANSPORTATION
HIGHWAYS DIVISION

WAIMALU VIADUCT
OB DI FRAME DETAILS

INTERSTATE ROUTE H-1 IMPROVEMENTS
Vicinity of Pearl City Viaduct to Waimalu Viaduct
Federal-Aid Project No. NH-H1-1(285)

Scale: As Noted Date: May 2023

SHEET No. SB6.10 OF 11 SHEETS

281

ORIGINAL PLAN | SURVEY PLOTTED BY | DRAWN BY | TRACED BY | DESIGNED BY | QUANTITIES BY | CHECKED BY | DATE
NOTE BOOK No.

DRAWING NAME: Z:\OD ENGING\22-001.8 PEARL CITY VIADUCT REPAIRS\01 CAD\05-23-23 1GDPCT\PCVR-SB6604 WV OVERLAY DRN DET.DWG PLOT TIME: 05-24-23, 9:37 AM

FED. ROAD DIST. NO.	STATE	FEDERAL AID PROJ. NO.	FISCAL YEAR	SHEET NO.	TOTAL SHEETS
HAWAII	HAW.	NH-H1-1(285)	2023	282	287

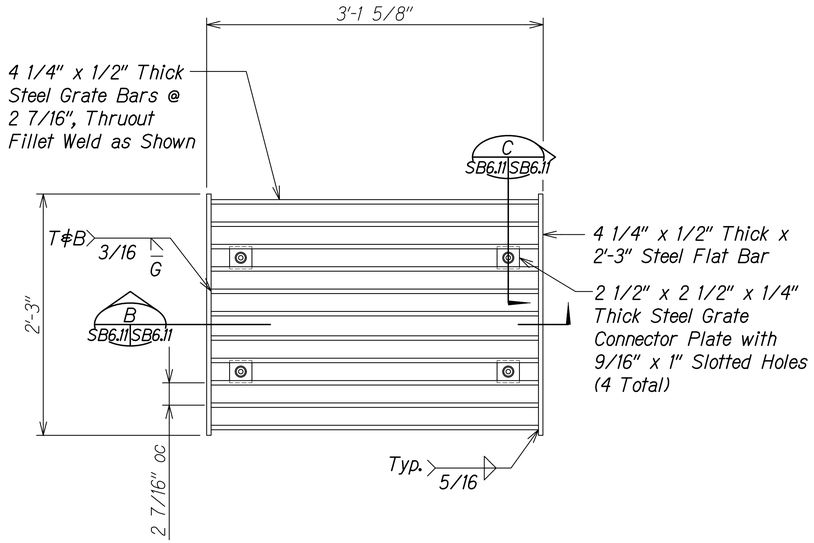

TYPICAL NEW TYPE "A-11" GRATE PLAN

Scale: 1 1/2" = 1'-0"

A SB6.11 SB6.11

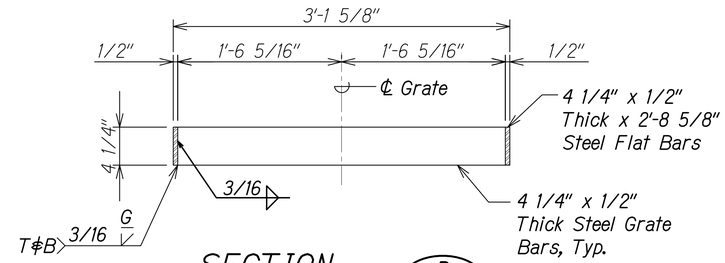

SECTION

Scale: 1 1/2" = 1'-0"

B SB6.11 SB6.11

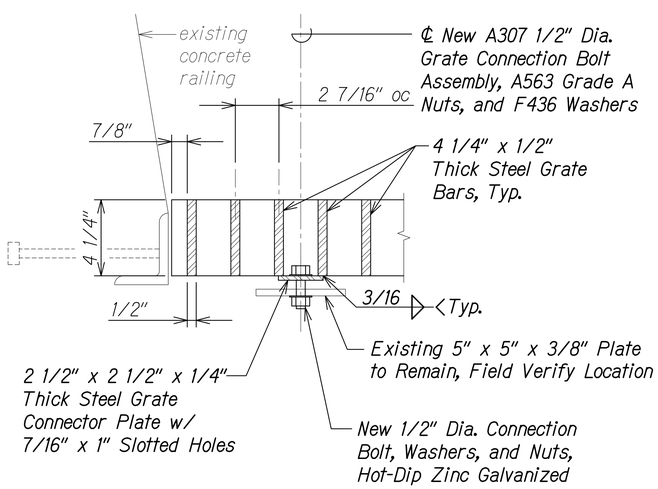

SECTION

Scale: 3" = 1'-0"

C SB6.11 SB6.11

NOTES:

1. Shop drawings for grating shall be submitted to the Engineer for acceptance.
2. Prior to preparation of shop drawings, the Contractor shall field measure the existing frame opening size for every drain inlet. Submit any discrepancies to the Engineer for review.
3. Entire grating assemblage shall be hot-dip zinc galvanized in accordance with ASTM A123.
4. All loose hardware, including bolts, nuts, and washer shall be hot-dip zinc galvanized in accordance with ASTM A153.

ERIC Y. MATSUMOTO
LICENSED PROFESSIONAL ENGINEER
NO. 10156-S
HAWAII, U.S.A.

THIS WORK WAS PREPARED BY ME OR UNDER MY SUPERVISION.

SIGNATURE — EXPIRATION DATE OF THE LICENSE 4-30-24

STATE OF HAWAII
DEPARTMENT OF TRANSPORTATION
HIGHWAYS DIVISION

WAIMALU VIADUCT
OB DI GRATE DETAILS

INTERSTATE ROUTE H-1 IMPROVEMENTS
Vicinity of Pearl City Viaduct to Waimalu Viaduct
Federal-Aid Project No. NH-H1-1(285)

Scale: As Noted — Date: May 2023

SHEET No. SB6.11 OF 11 SHEETS

ORIGINAL PLAN — SURVEY PLOTTED BY — DRAWN BY — TRACED BY — DESIGNED BY — QUANTITIES BY — CHECKED BY — DATE
NOTE BOOK No.

DRAWING NAME: Z:\OD ENGING\22-001.8 PEARL CITY VIADUCT REPAIRS\01 CAD\05-23-23 1GRPCT\PCVR-SB6B04 WV OVERLAY DRN DETDWG PLOT TIME: 05-24-23, 9:38 AM

FED. ROAD DIST. NO.	STATE	FEDERAL AID PROJ. NO.	FISCAL YEAR	SHEET NO.	TOTAL SHEETS
HAWAII	HAW.	NH-H1-1(285)	2023	283	287

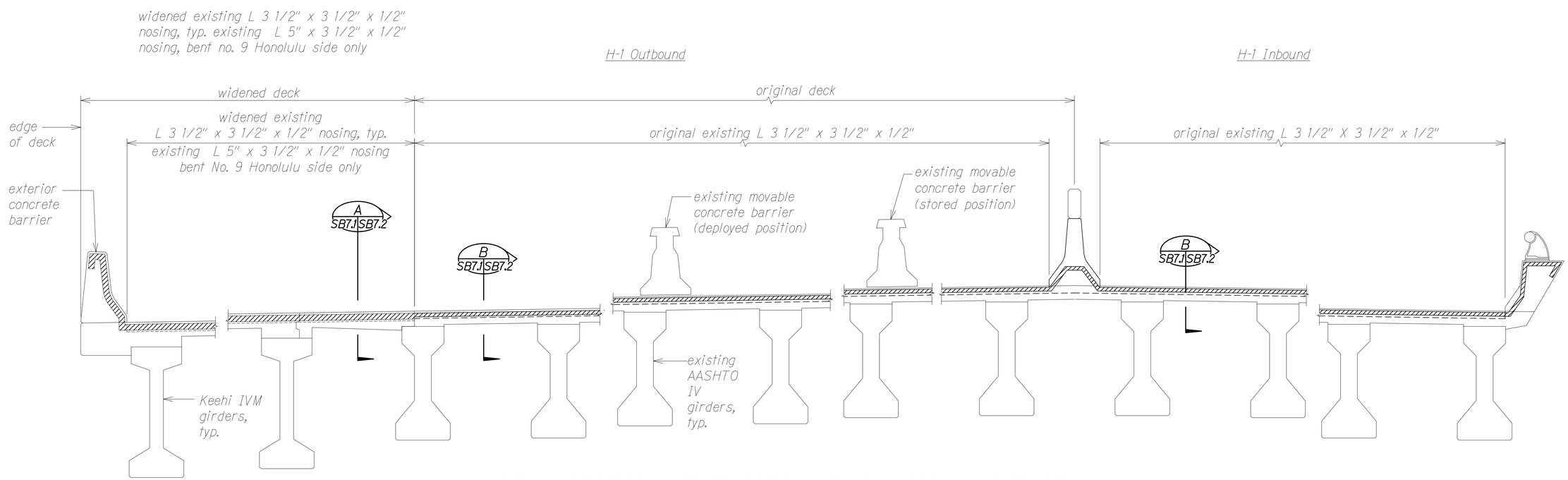

DECK SECTION AT EXISTING EXPANSION JOINT SEAL AT PIER NOS. 3, 6, AND 9 (ABUTMENTS SIMILAR)

Scale: 1/2" = 1'-0"

A SB7.1 SB7.1

LEGEND:

Existing Expansion Joint Seal to be Removed and Replaced, See SB7.3 and SB7.4

ERIC Y. MATSUMOTO
LICENSED PROFESSIONAL ENGINEER
NO. 10156-S
HAWAII, U.S.A.

THIS WORK WAS PREPARED BY ME OR UNDER MY SUPERVISION.

SIGNATURE — EXPIRATION DATE OF THE LICENSE 4-30-24

STATE OF HAWAII
DEPARTMENT OF TRANSPORTATION
HIGHWAYS DIVISION

WAIMALU VIADUCT - EXISTING EXPANSION JOINT SEAL DETAILS

INTERSTATE ROUTE H-1 IMPROVEMENTS
Vicinity of Pearl City Viaduct to Waimalu Viaduct
Federal-Aid Project No. NH-H1-1(285)

Scale: As Noted — Date: May 2023

SHEET No. SB7.1 OF 4 SHEETS

ORIGINAL PLAN — SURVEY PLOTTED BY — DRAWN BY — TRACED BY — DESIGNED BY — QUANTITIES BY — CHECKED BY — DATE
NOTE BOOK No.

DRAWING NAME: Z:\OD ENGINEERS\22-001.8 PEARL CITY VIADUCT REPAIRS\01 CAD\05-23-23 1GDPC1\PCVR-SB7701 WV JNT DET.DWG PLOT TIME: 05-24-23, 9:38 AM

FED. ROAD DIST. NO.	STATE	FEDERAL AID PROJ. NO.	FISCAL YEAR	SHEET NO.	TOTAL SHEETS
HAWAII	HAW.	NH-HI-1(285)	2023	284	287

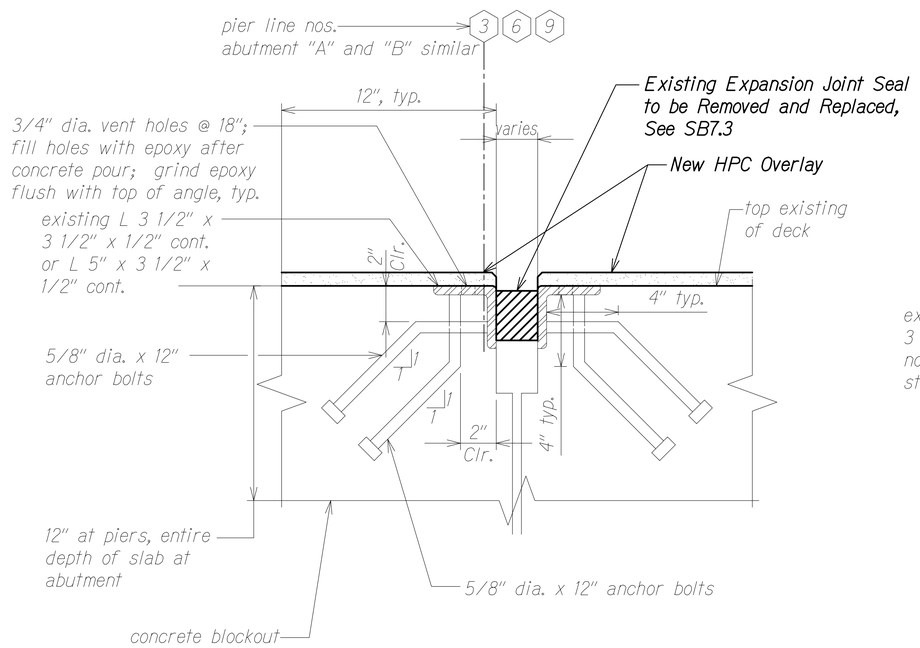

TYPICAL EXISTING DECK EXPANSION JOINT SECTION AT WIDENING

Scale: 3" = 1'-0"

A SB7.1 SB7.2

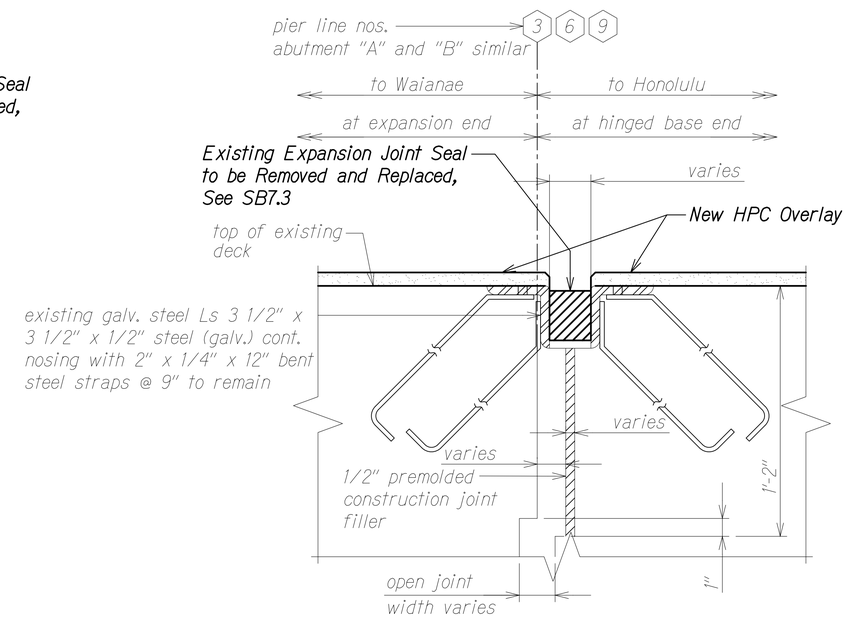

TYPICAL EXISTING ORIGINAL DECK EXPANSION JOINT

Scale: 3" = 1'-0"

B SB7.1 SB7.2

NOTE:

The Contractor shall verify all expansion joint widths.

ERIC Y. MATSUMOTO
LICENSED PROFESSIONAL ENGINEER
NO. 10156-S
HAWAII, U.S.A.

THIS WORK WAS PREPARED BY ME OR UNDER MY SUPERVISION.

SIGNATURE — EXPIRATION DATE OF THE LICENSE 4-30-24

STATE OF HAWAII
DEPARTMENT OF TRANSPORTATION
HIGHWAYS DIVISION

WAIMALU VIADUCT - EXISTING EXPANSION JOINT DETAILS

INTERSTATE ROUTE H-1 IMPROVEMENTS
Vicinity of Pearl City Viaduct to Waimalu Viaduct
Federal-Aid Project No. NH-HI-1(285)

Scale: As Noted — Date: May 2023

SHEET No. SB7.2 OF 4 SHEETS

284

ORIGINAL PLAN	SURVEY PLOTTED BY	DATE
	DRAWN BY	"
	TRACED BY	"
NOTE BOOK	DESIGNED BY	"
	QUANTITIES BY	"
No.	CHECKED BY	"

DRAWING NAME: Z:\OD ONGOING\22-0018 PEARL CITY VIADUCT REPAIRS\01 CAD\05-23-23 100PCT\PCVR-SB0701 WV JNT DET.DWG PLOT TIME: 05-24-23, 9:39 AM

FED. ROAD DIST. NO.	STATE	FEDERAL AID PROJ. NO.	FISCAL YEAR	SHEET NO.	TOTAL SHEETS
HAWAII	HAW.	NH-HI-1(285)	2023	285	287

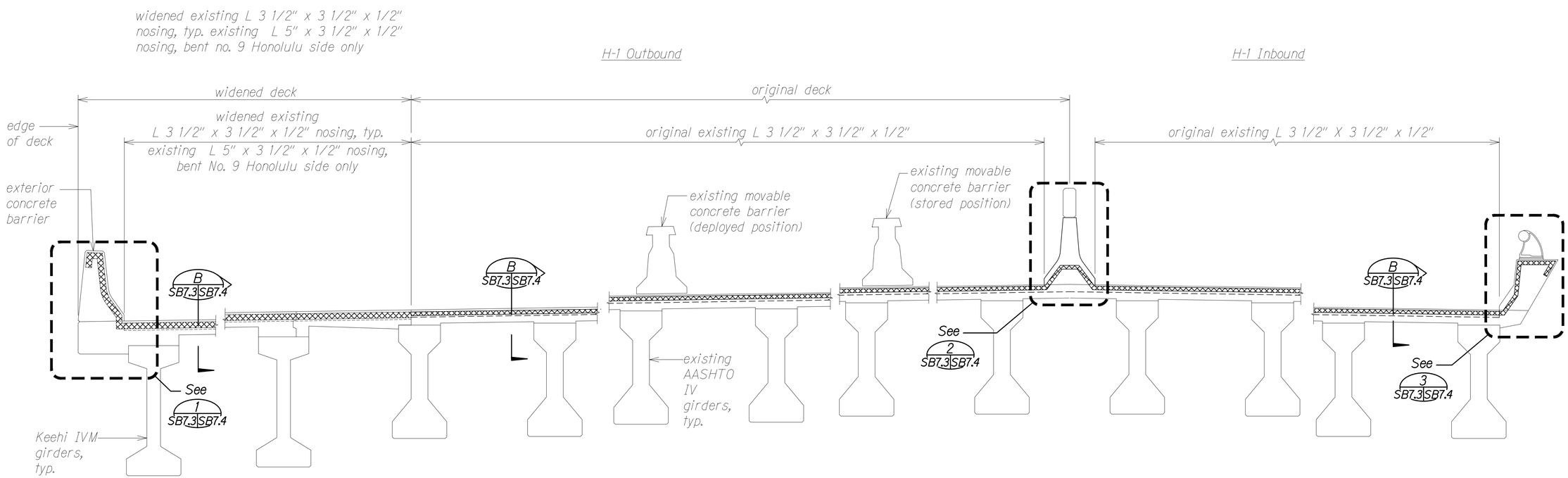

DECK SECTION AT NEW EXPANSION JOINT COMPRESSION SEAL AT PIER NOS. 3, 6, AND 9 (ABUTMENTS SIMILAR)

Scale: 1/2" = 1'-0"

A SB7.1 SB7.1

NOTES:

1. New compression seals shall conform to Section 515 DECK EXPANSION JOINTS of the Special Provisions.
2. Installation widths are approximate. The Contractor shall field verify expansion joint widths prior to ordering compression seal materials. The Contractor shall be aware of the date and time the field measurements are recorded due to the effects of temperature.
3. The concrete at the expansion joint shall be sound after replacement of existing compression seals. If defective concrete is discovered prior to the removal of the existing expansion joint seal, notify the Engineer immediately.

LEGEND:

New Expansion Joint Compression Seal

ERIC Y. MATSUMOTO
LICENSED PROFESSIONAL ENGINEER
NO. 10156-S
HAWAII, U.S.A.

THIS WORK WAS PREPARED BY ME OR UNDER MY SUPERVISION.

SIGNATURE — EXPIRATION DATE OF THE LICENSE 4-30-24

STATE OF HAWAII
DEPARTMENT OF TRANSPORTATION
HIGHWAYS DIVISION

WAIMALU VIADUCT - NEW EXPANSION JOINT COMPRESSION SEAL DETAILS

INTERSTATE ROUTE H-1 IMPROVEMENTS
Vicinity of Pearl City Viaduct to Waimalu Viaduct
Federal-Aid Project No. NH-HI-1(285)

Scale: As Noted — Date: May 2023

SHEET No. SB7.3 OF 4 SHEETS

ORIGINAL PLAN | SURVEY PLOTTED BY | DRAWN BY | TRACED BY | DESIGNED BY | QUANTITIES BY | CHECKED BY | DATE | NOTE BOOK No.

DRAWING NAME: Z:\OD ONGOING\22-601.8 PEARL CITY VIADUCT REPAIRS\01 CAD\05-23-23 DOPCR\PCVR-SB0701 WV JNT DET.DWG PLOT TIME: 05-24-23 9:39 AM

FED. ROAD DIST. NO.	STATE	FEDERAL AID PROJ. NO.	FISCAL YEAR	SHEET NO.	TOTAL SHEETS
HAWAII	HAW.	NH-H1-1(285)	2023	286	287

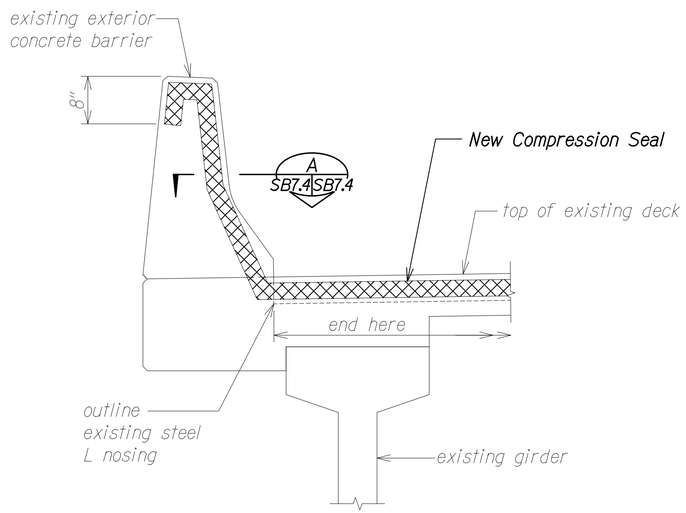

DETAIL 1
Scale: 1" = 1'-0" SB7.3 SB7.4

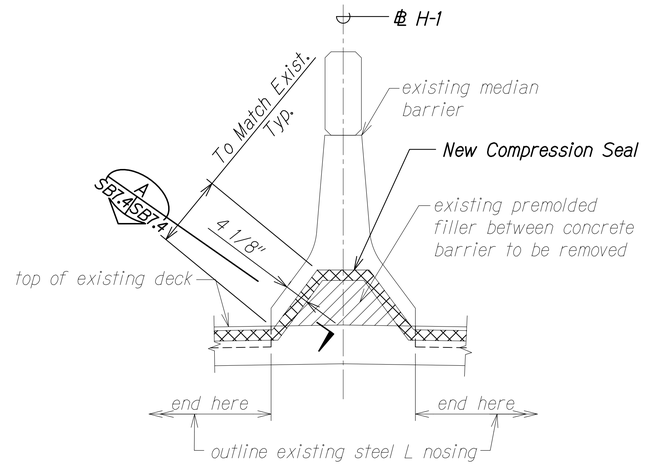

AT CONCRETE BARRIER 2
Scale: 1" = 1'-0" SB7.3 SB7.4

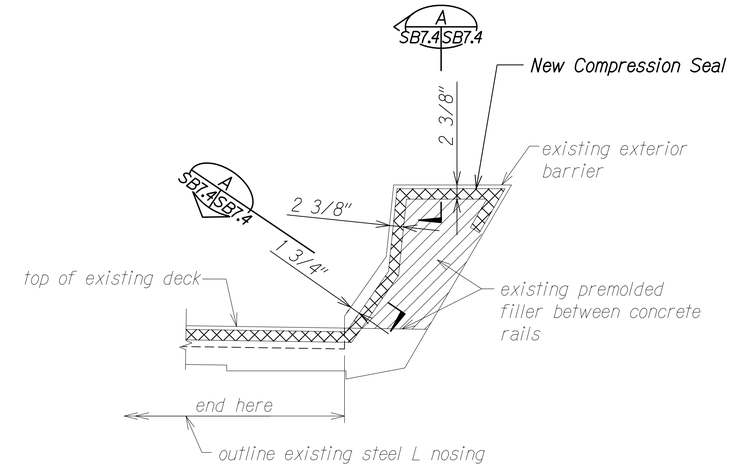

AT CONCRETE RAILING 3
Scale: 1" = 1'-0" SB7.3 SB7.4

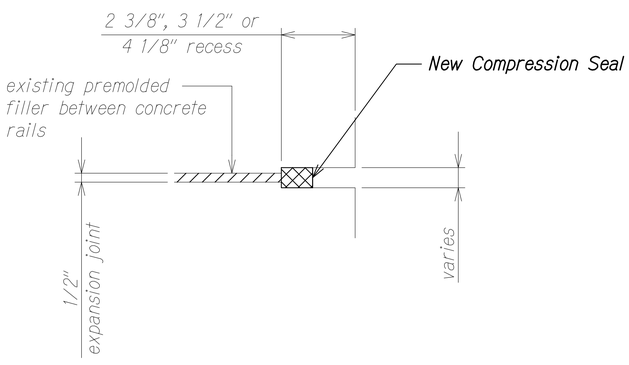

SECTION A
Scale: 3" = 1'-0" SB7.4 SB7.4

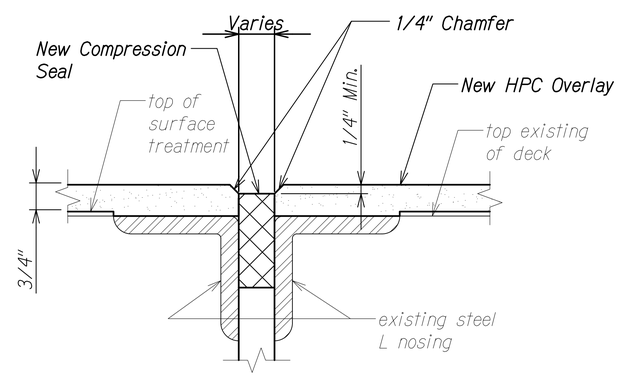

SECTION B
Scale: 6" = 1'-0" SB7.3 SB7.4

NOTES:

1. Metal railing not shown for clarity.
2. Anchors not shown for clarity.

ERIC Y. MATSUMOTO
LICENSED PROFESSIONAL ENGINEER
NO. 10156-S
HAWAII, U.S.A.

THIS WORK WAS PREPARED BY ME OR UNDER MY SUPERVISION.

SIGNATURE — EXPIRATION DATE OF THE LICENSE 4-30-24

STATE OF HAWAII
DEPARTMENT OF TRANSPORTATION
HIGHWAYS DIVISION

WAIMALU VIADUCT - NEW EXPANSION JOINT COMPRESSION SEAL DETAILS

INTERSTATE ROUTE H-1 IMPROVEMENTS
Vicinity of Pearl City Viaduct to Waimalu Viaduct
Federal-Aid Project No. NH-H1-1(285)

Scale: As Noted Date: May 2023

SHEET No. SB7.4 OF 4 SHEETS

ORIGINAL PLAN	SURVEY PLOTTED BY	DATE
	DRAWN BY	"
	TRACED BY	"
NOTE BOOK	DESIGNED BY	"
	QUANTITIES BY	"
No.	CHECKED BY	"

DRAWING NAME: Z:\OD ONGOING\22-0018 PEARL CITY VIADUCT REPAIRS\01 CAD\05-23-23 100PCT\CVR-SB0701 WV JNT DET.DWG PLOT TIME: 05-24-23, 9:39 AM

FED. ROAD DIST. NO.	STATE	FEDERAL AID PROJ. NO.	FISCAL YEAR	SHEET NO.	TOTAL SHEETS
HAWAII	HAW.	NH-H1-1(285)	2023	287	287

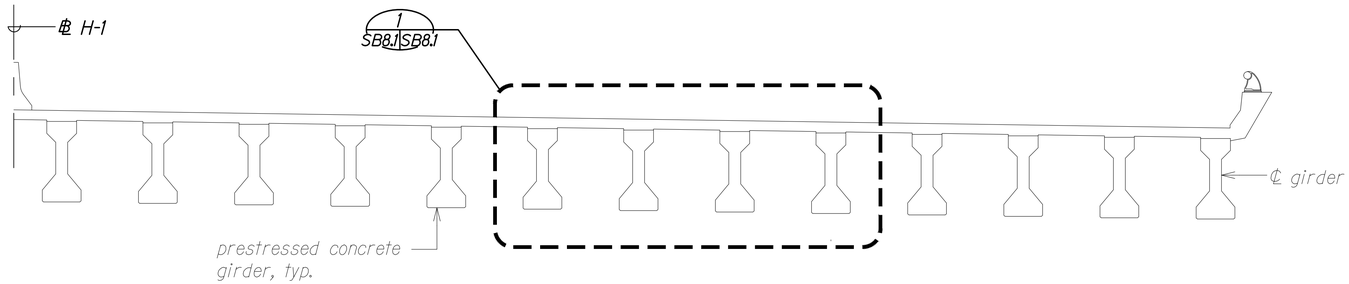

TYPICAL TRANSVERSE SECTION A SB8.1 SB8.1

Scale: 1/4" = 1'-0"

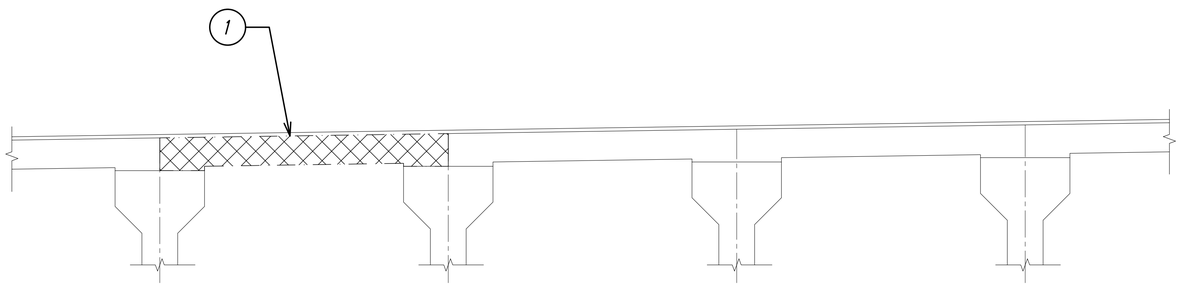

DETAIL 1 SB8.1 SB8.1

Scale: 3/4" = 1'-0"

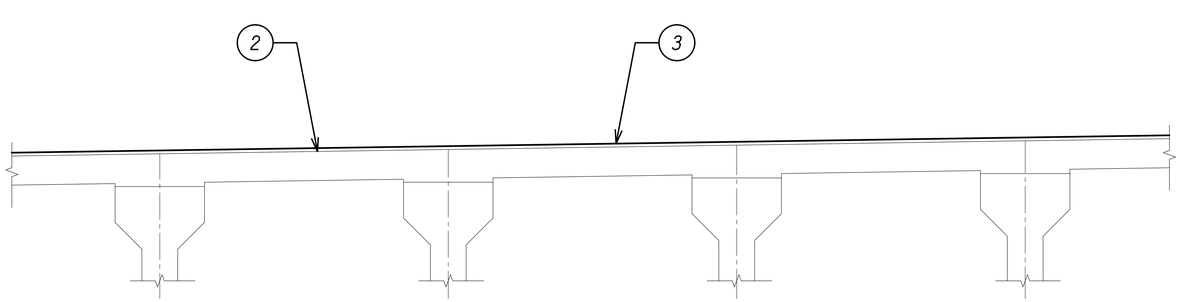

DETAIL 2 SB8.1 SB8.1

Scale: 3/4" = 1'-0"

LEGEND:

Defective Concrete

CONSTRUCTION SEQUENCE:

1. Remove existing surface treatment. Remove and repair defective concrete with VESLMC - See Section 682-DEFECTIVE CONCRETE REPAIRS of the Special Provisions.
2. Place surface treatment no later than 48 hours after surface preparation and according to Section 680 - SURFACE TREATMENT of the Special Provisions.
3. Place HPC no later than 48 hours after surface preparation of the surface treatment and according to Section 678 - HYBRID POLYMER CONCRETE (HPC) of the Special Provisions.
4. Replace expansion joint compression seals according to Section 515 - DECK EXPANSION JOINT of the Special Provision.

NOTES:

1. Surface treatment shall match existing overlay.
2. Overlay surface shall be uniform in thickness and appearance.
3. Should surface treatment and HPC not be applied within 48 hour of surface preparation, surface preparation shall be repeated.

ERIC Y. MATSUMOTO
LICENSED PROFESSIONAL ENGINEER
NO. 10156-S
HAWAII, U.S.A.

THIS WORK WAS PREPARED BY ME OR UNDER MY SUPERVISION.

SIGNATURE — EXPIRATION DATE OF THE LICENSE 4-30-24

STATE OF HAWAII
DEPARTMENT OF TRANSPORTATION
HIGHWAYS DIVISION

WAIMALU VIADUCT
CONSTRUCTION SEQUENCE

INTERSTATE ROUTE H-1 IMPROVEMENTS
Vicinity of Pearl City Viaduct to Waimalu Viaduct
Federal-Aid Project No. NH-H1-1(285)

Scale: As Noted — Date: May 2023

SHEET No. SB8.1 OF 1 SHEETS

ORIGINAL PLAN — SURVEY PLOTTED BY — DRAWN BY — TRACED BY — DESIGNED BY — QUANTITIES BY — CHECKED BY — DATE

NOTE BOOK No.

DRAWING NAME: Z:\OD ONGOING\22-401-2 PEARL CITY VIADUCT REPAIRS\01 CAD\05-23-23 DOPCR\POR-SB0801 WV CONST SEQ.DWG PLOT TIME: 05-24-23, 9:40 AM