FED. ROAD DIST. NO.	STATE	FED. AID PROJ. NO.	FISCAL YEAR	SHEET NO.	TOTAL SHEETS
HAWAII	HAW.	TC-HI-1(258)	2006	28	89

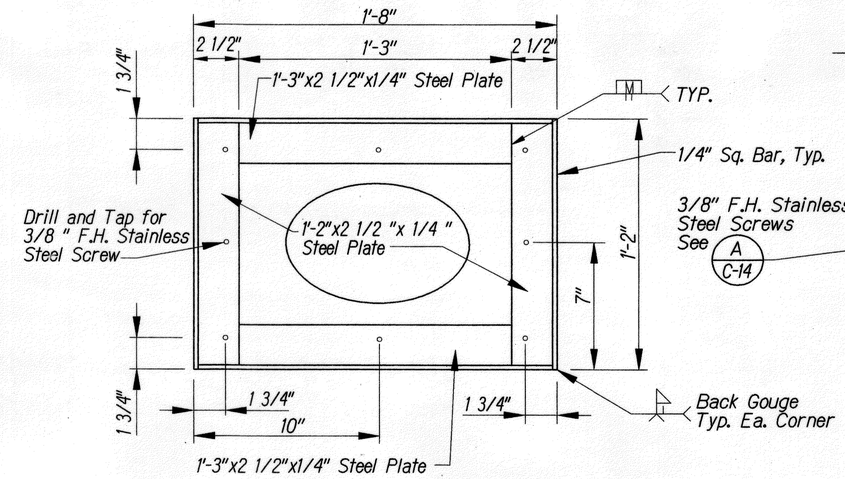

PLAN

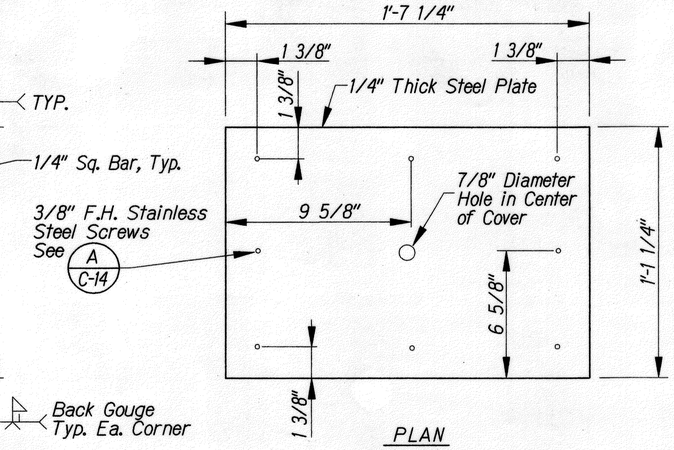

PLAN

DETAIL OF STEEL COVER

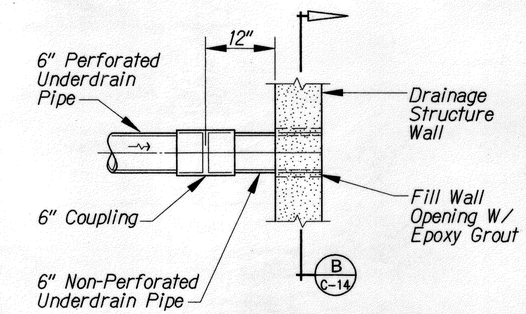

UNDERDRAIN CONNECTION

No Scale

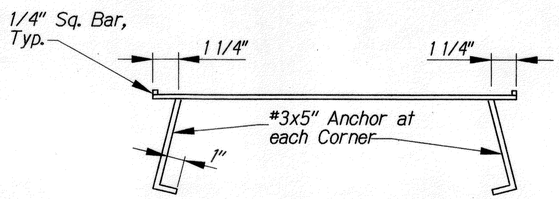

SECTION

DETAILS OF STEEL FRAME

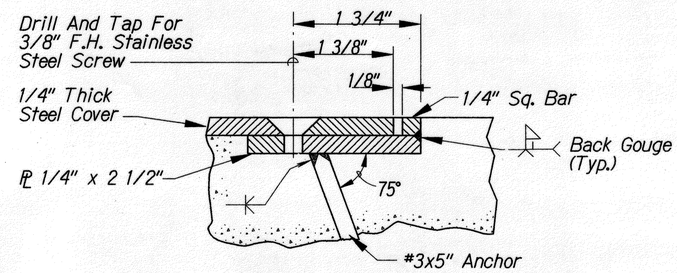

DETAIL A C-14

Note:
All Steel Parts shall be Galvanized in Accordance with the Requirements of ASTM A123.

DETAILS OF STEEL FRAME AND COVER FOR CLEANOUT

No Scale

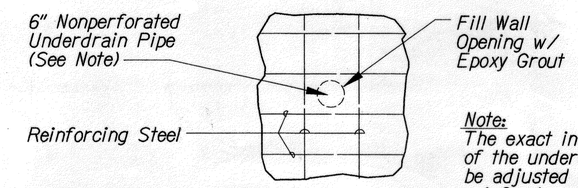

SECTION B C-14

Note:
The exact invert location of the underdrain connection shall be adjusted to pass between the reinforcing steel.

TYPICAL DETAILS OF 6" UNDERDRAIN CONNECTION TO DRAINAGE STRUCTURES

No Scale

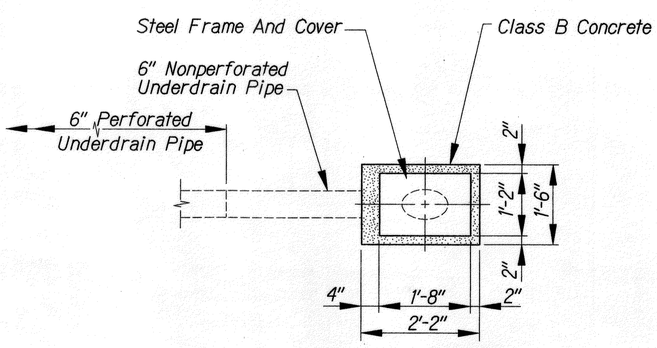

PLAN

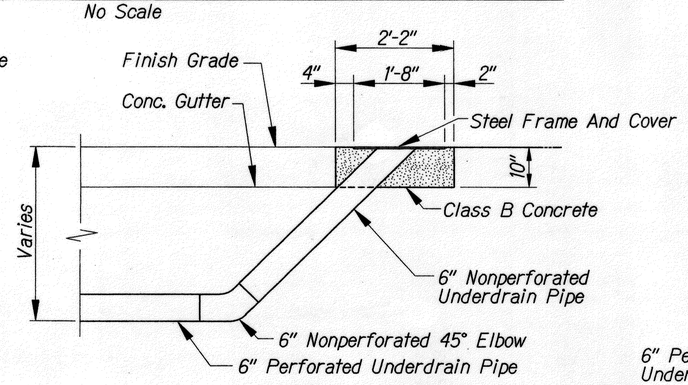

ELEVATION

TYPICAL DETAILS OF CLEANOUT

No Scale

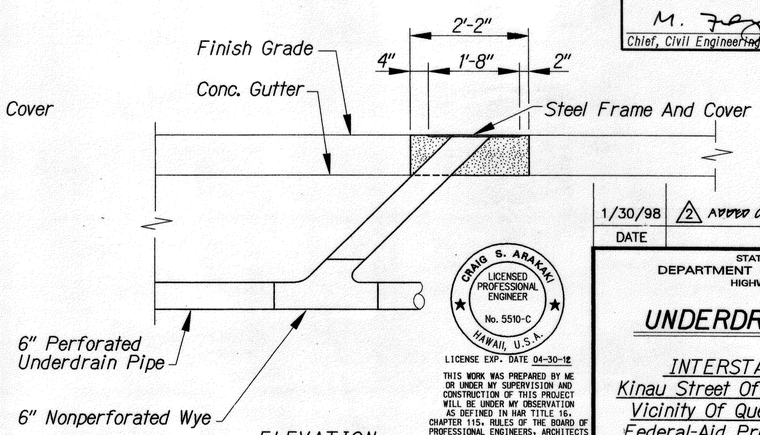

ELEVATION

Approval
M. [signature] 5/14/10
Chief, Civil Engineering Branch, DPP Date

DATE	REVISION
1/30/98	2 ADDED CEB APPROVAL BLOCK

CRAIG S. ARAKAKI LICENSED PROFESSIONAL ENGINEER No. 5510-C HAWAII, U.S.A.
LICENSE EXP. DATE 04-30-12

THIS WORK WAS PREPARED BY ME OR UNDER MY SUPERVISION AND CONSTRUCTION OF THIS PROJECT WILL BE UNDER MY OBSERVATION AS DEFINED IN HAR TITLE 16, CHAPTER 115, RULES OF THE BOARD OF PROFESSIONAL ENGINEERS, ARCHITECTS AND SURVEYORS, STATE OF HAWAII.
Craig S. Arakaki

STATE OF HAWAII
DEPARTMENT OF TRANSPORTATION
HIGHWAYS DIVISION

UNDERDRAIN DETAILS

INTERSTATE ROUTE H-1
Kinau Street Off-Ramp Improvements
Vicinity Of Queen's Medical Center
Federal-Aid Project No. TC-H1-1(258)

Scale: As Shown Date: Dec. 2006

SHEET No. 1 OF 1 SHEETS

ORIGINAL PLAN | SURVEY PLOTTED BY | DRAWN BY | TRACED BY | DESIGNED BY | QUANTITIES BY | CHECKED BY | DATE | NOTE BOOK | No.

F:\CAD\LARSON\DGN\KINAU\DOT-C-14_CO-DETS.DGN

C.O. 28

FED. ROAD DIST. NO.	STATE	FED. AID PROJ. NO.	FISCAL YEAR	SHEET NO.	TOTAL SHEETS
HAWAII	HAW.	TC-HI-I(258)	2006	C.O. 29	89

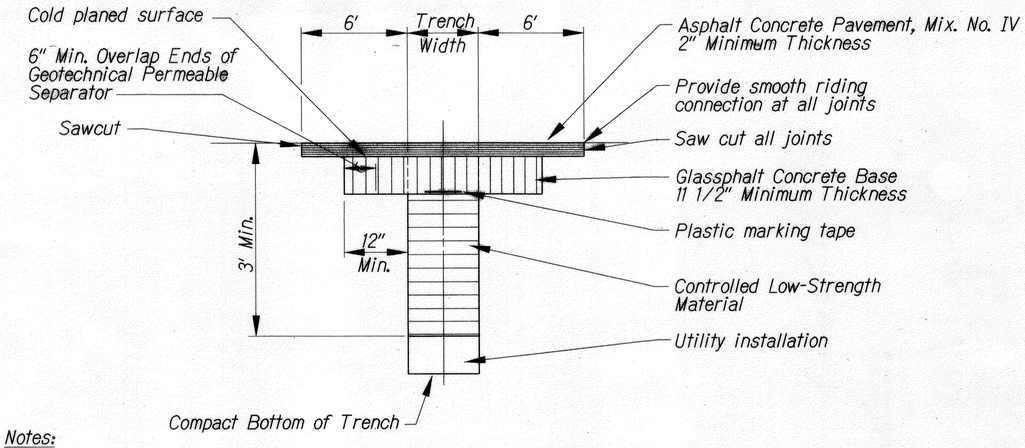

Notes:

1. Tack coat faces of existing asphalt bound materials prior to filling excavation with new asphalt bound materials.
2. All work performed shall be subject to inspection by the State and shall be to the State's satisfaction.
3. Construct the trench restoration in accordance with the Hawaii Standard Specifications for Road, Bridge, and Public Works Construction and its special provisions, and the specification of Installation of Miscellaneous Improvements within State Highways.
4. Pavement Smoothness
   - A. Obtain a profile of the existing roadway surface that is to have a new surface as a result of the Restoration of the trench excavation and submit the profile to the District Engineer before any work for trench excavation begins.
   - B. Obtain a profile of the roadway surface after the roadway surface has been repaved and submit the profile to the District Engineer. The profile of the roadway surface after repaving shall be equal to or smoother than the profile obtained before trench excavation began.
   - C. The distance from the paved surface to the testing edge of ten-foot long straight edge between two points of contact shall not exceed 3/16 Inch.
5. Place all unbound materials in the trench as follows:
   - A. Compaction by water jetting or ponding is not permitted.
   - B. All unbound materials, except the permeable base and ASTM C-33 Size 67:
     - Place material in accordance with Subsection 206.03 (E) Structure and Trench Backfill of the Hawaii Standard Specifications for Road, Bridge, and Public Works Construction.
     - Take one compaction test for 300 lineal feet of trench. Submit compaction test results to the District Engineer.
   - C. Permeable Base:
     - Place permeable material in uniform horizontal layer not exceeding 9 Inches in compacted thickness.
     - Compact each layer with 8 passes of a vibrating plate compactor. Use hand tamper if trench too narrow to accommodate the vibrating plate compactor.
   - D. ASTM C-33, Size 67:
     - Material placed under water need not be compacted.
     - Material Placed Above Water:
       - I. Place material in uniform horizontal layer not exceeding 9 inches in loose thickness.
       - II. Compact each layer with 8 passes of a vibrating plate compactor. Use hand tamper if trench too narrow to accommodate the vibrating plate compactor.

ASPHALT PAVEMENT RESTORATION OVER TRENCH EXCAVATION (CITY & STATE)

No Scale

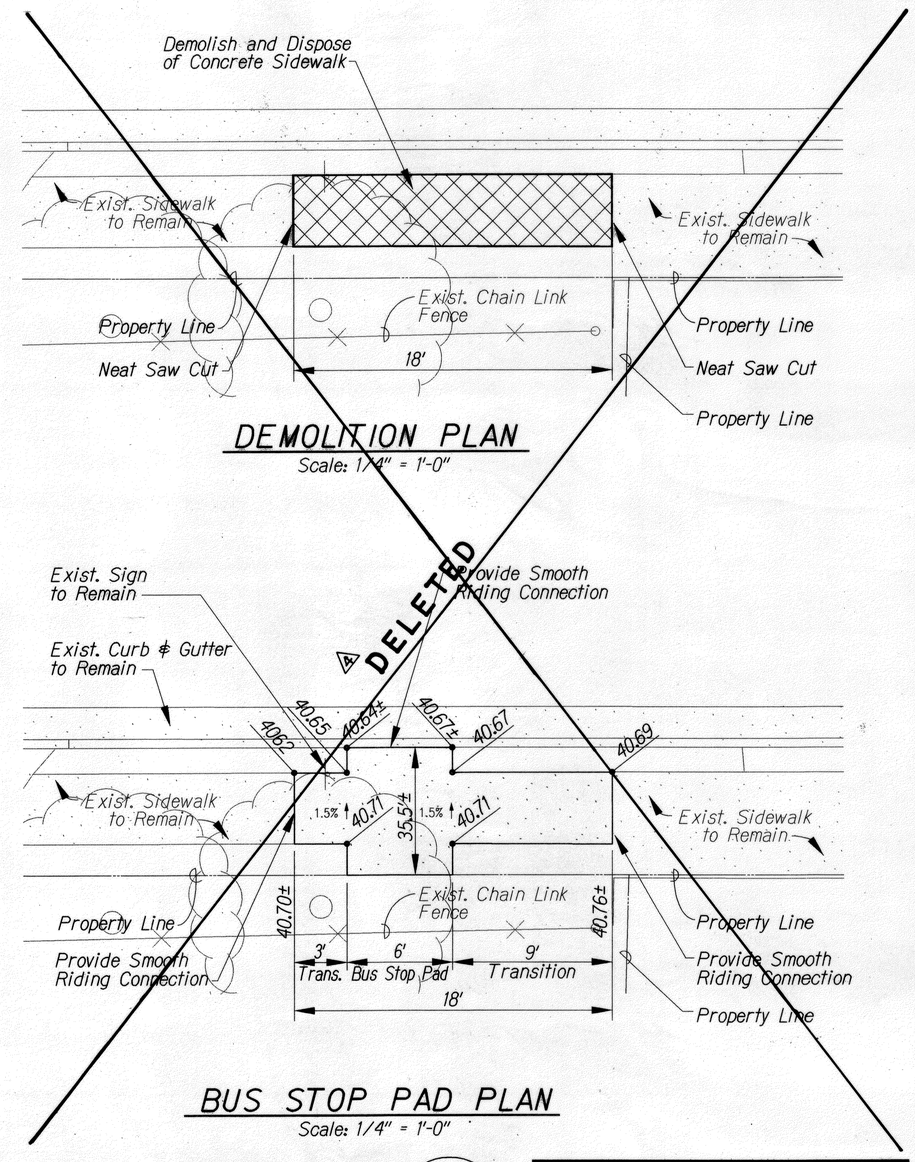

DEMOLITION PLAN

Scale: 1/4" = 1'-0"

BUS STOP PAD PLAN

Scale: 1/4" = 1'-0"

REV.	DATE	BRIEF	BY	TRD	NWB	CED	BHS
4	10-27-10	DELETED BUS STOP PAD DETAILS	EGI			11/26/10 CED	
2	2/17/09	REAPPROVAL DUE TO TIME LAPSE UPDATE STAMP	EGI				

RE-APPROVAL
M. [signature] 5/14/10
CHIEF, CIVIL ENGINEERING BRANCH, DPP DATE

Approved By:
M. [signature] 6/8/07
Chief, Civil Engineering Branch, DPP Date

CRAIG S. ARAKAKI
LICENSED PROFESSIONAL ENGINEER
No. 5510-C
HAWAII, U.S.A.
LICENSE EXP. DATE 04-30-08

THIS WORK WAS PREPARED BY ME OR UNDER MY SUPERVISION AND CONSTRUCTION OF THIS PROJECT WILL BE UNDER MY OBSERVATION AS DEFINED IN HAR TITLE 16, CHAPTER 115, RULES OF THE BOARD OF PROFESSIONAL ENGINEERS, ARCHITECTS AND SURVEYORS, STATE OF HAWAII.
Craig S. Arakaki

STATE OF HAWAII
DEPARTMENT OF TRANSPORTATION
HIGHWAYS DIVISION

MISCELLANEOUS DETAILS

INTERSTATE ROUTE H-1
Kinau Street Off-Ramp Improvements
Vicinity Of Queen's Medical Center
Federal-Aid Project No. TC-HI-I(258)

Scale: As Shown Date: Dec. 2006

SHEET No. 1 OF 2 SHEETS

C.O. 29

ORIGINAL PLAN	SURVEY PLOTTED BY	DATE
	DRAWN BY	
	TRACED BY	
NOTE BOOK	DESIGNED BY	
	QUANTITIES BY	
No.	CHECKED BY	

FED. ROAD DIST. NO.	STATE	FED. AID PROJ. NO.	FISCAL YEAR	SHEET NO.	TOTAL SHEETS
HAWAII	HAW.	TC-HI-1(258)	2006	C.O. 29 S-1	89

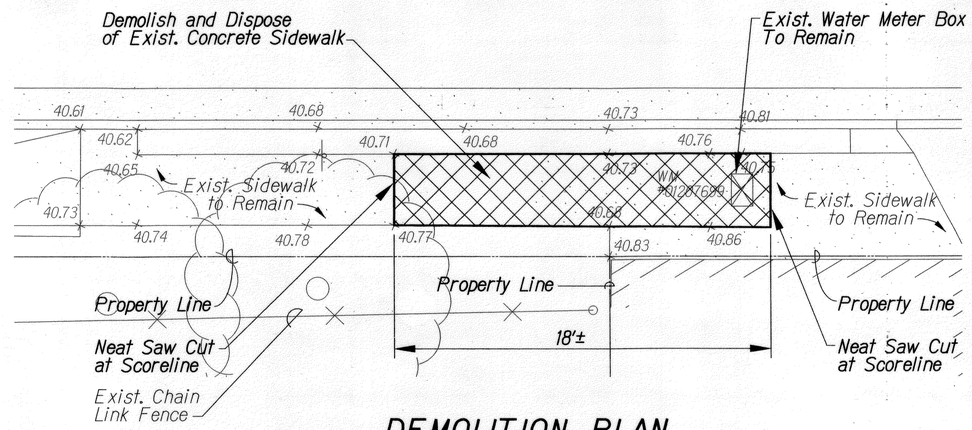

DEMOLITION PLAN

Scale: 1/4" = 1'-0"

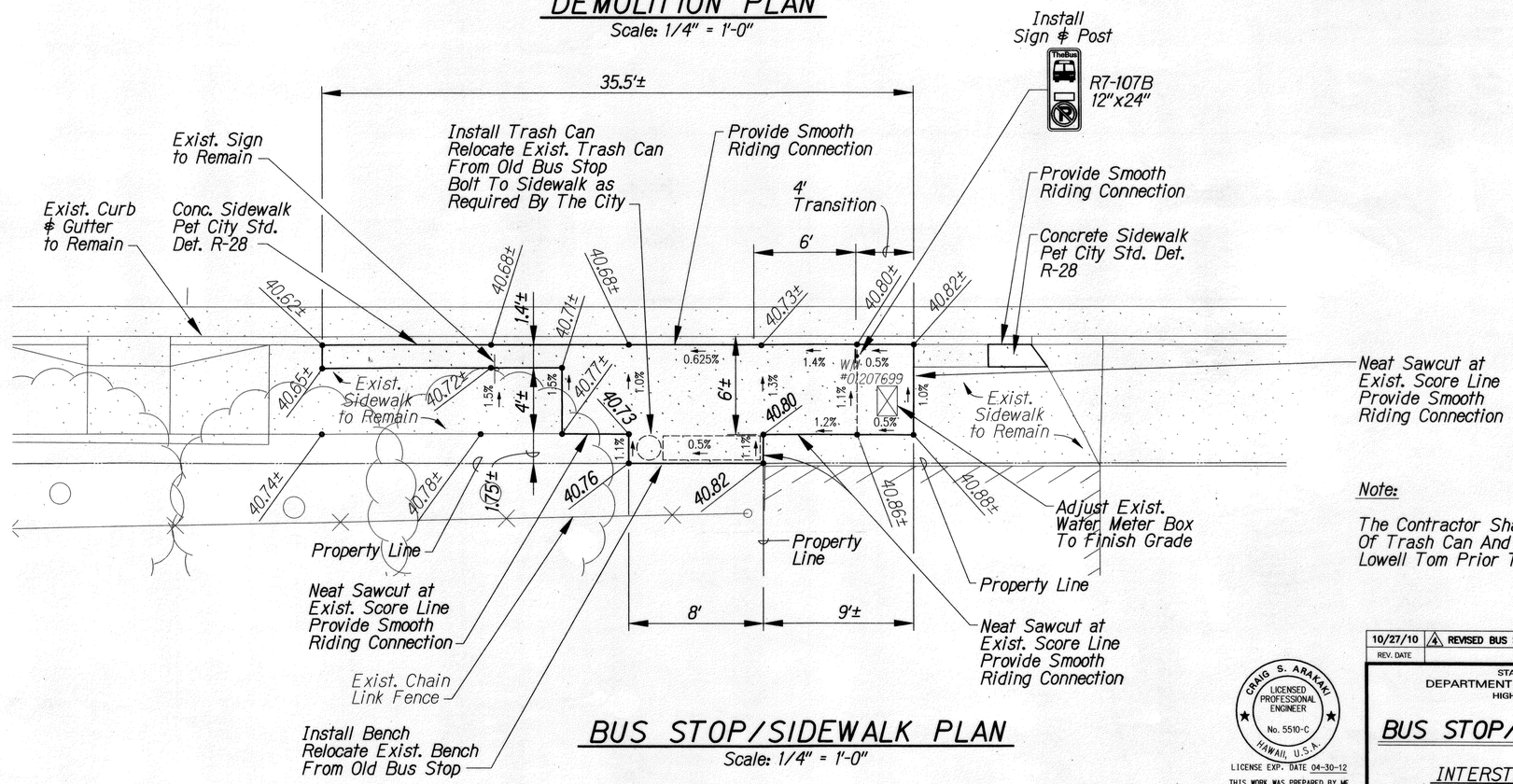

BUS STOP/SIDEWALK PLAN

Scale: 1/4" = 1'-0"

Note:

The Contractor Shall Verify Location Of Trash Can And Bench With Lowell Tom Prior To Installation.

ORIGINAL PLAN	SURVEY PLOTTED BY	DATE
	SURVEY BY	
	TRACED BY	
NOTE BOOK	DESIGNED BY	
	QUANTITIES BY	
No.	CHECKED BY	

Approved By:

M. 11/26/10

Chief, Civil Engineering Branch, DPP Date

CRAIG S. ARAKAKI
LICENSED PROFESSIONAL ENGINEER
No. 5510-C
HAWAII, U.S.A.

LICENSE EXP. DATE 04-30-12

THIS WORK WAS PREPARED BY ME OR UNDER MY SUPERVISION AND CONSTRUCTION OF THIS PROJECT WILL BE UNDER MY OBSERVATION AS DEFINED IN HAR TITLE 16, CHAPTER 115, RULES OF THE BOARD OF PROFESSIONAL ENGINEERS, ARCHITECTS AND SURVEYORS, STATE OF HAWAII.

Craig S. Arakaki

REV. DATE	REVISION
10/27/10	1 REVISED BUS STOP PAD PLAN

STATE OF HAWAII
DEPARTMENT OF TRANSPORTATION
HIGHWAYS DIVISION

BUS STOP/SIDEWALK PLAN

INTERSTATE ROUTE H-1
Kinau Street Off-Ramp Improvements
Vicinity Of Queen's Medical Center
Federal-Aid Project No. TC-H1-1(258)

Scale: As Shown Date: Dec. 2006

SHEET No. 1 OF 2 SHEETS

C.O. 29 S-1

FED. ROAD DIST. NO.	STATE	FED. AID PROJ. NO.	FISCAL YEAR	SHEET NO.	TOTAL SHEETS
HAWAII	HAW.	TC-HI-I(258)	2006	C.O. 30	89

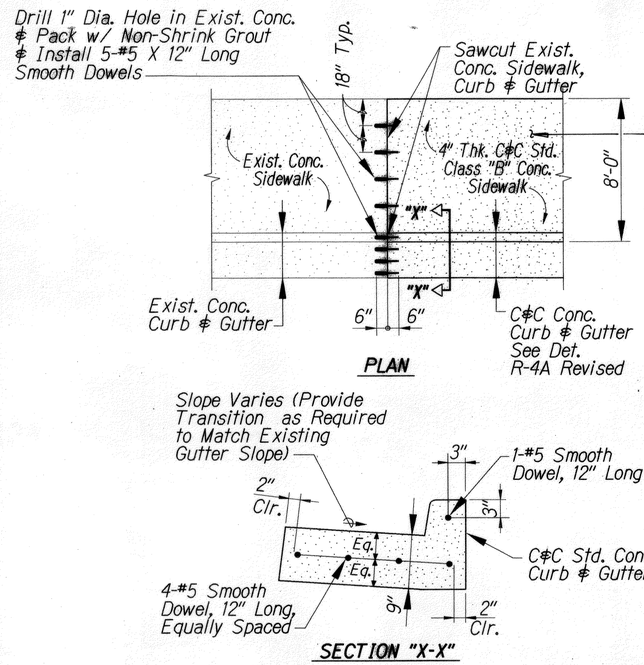

CONNECTION TO EXISTING SIDEWALK, CURB & GUTTER (W/IN CITY ROW)

No Scale

2 Comply With City's Jointing Requirements For Concrete Sidewalk & Driveways Dated April 6, 2009

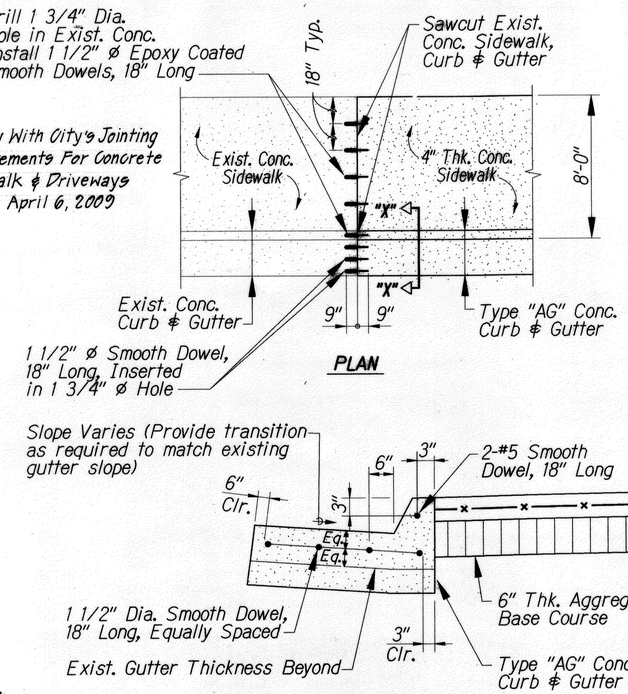

CONNECTION TO EXISTING SIDEWALK, CURB & GUTTER (W/IN STATE ROW)

No Scale

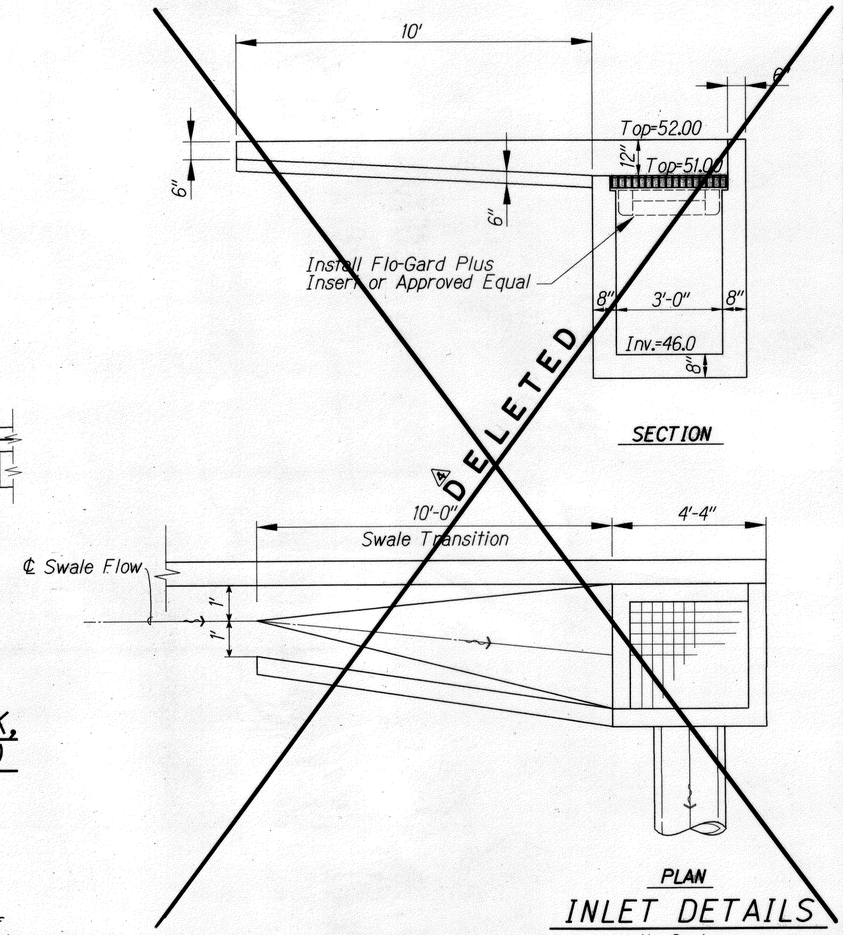

INLET DETAILS

No Scale

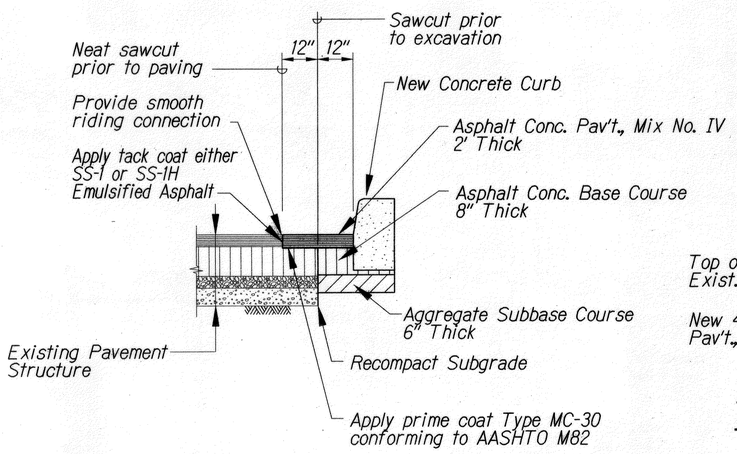

CONNECTION TO EXIST. ASPHALT CONCRETE

No Scale

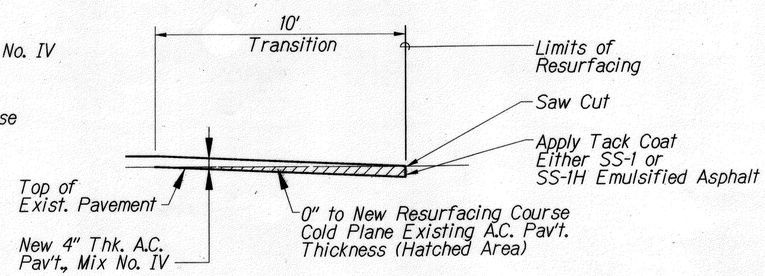

COLD PLANED TRANSITION TO EXISTING A.C. PAVEMENT

No Scale

REV.	DATE	BRIEF	BY	TRB	WHD	CEB	BNG
4	7/28/10	DELETE INLET I DETAILS	ECI				
2	3/17/09	REAPPROVAL DUE TO TIME LAPSE. UPDATED STAMP	ECI				

2 RE-APPROVAL
M. 5/14/10
CHIEF, CIVIL ENGINEERING BRANCH, DPP WT DATE

Approved By:
M. 6/8/07
Chief, Civil Engineering Branch, DPP WT Date

CRAIG S. ARAKAKI
LICENSED PROFESSIONAL ENGINEER
No. 5510-C
HAWAII, U.S.A.
2
LICENSE EXP. DATE 04-30-12

THIS WORK WAS PREPARED BY ME OR UNDER MY SUPERVISION AND CONSTRUCTION OF THIS PROJECT WILL BE UNDER MY OBSERVATION AS DEFINED IN HAR TITLE 16, CHAPTER 115, RULES OF THE BOARD OF PROFESSIONAL ENGINEERS, ARCHITECTS AND SURVEYORS, STATE OF HAWAII.
Craig S. Arakaki

STATE OF HAWAII
DEPARTMENT OF TRANSPORTATION
HIGHWAYS DIVISION

MISCELLANEOUS DETAILS

INTERSTATE ROUTE H-1
Kinau Street Off-Ramp Improvements
Vicinity Of Queen's Medical Center
Federal-Aid Project No. TC-HI-I(258)

Scale: As Shown Date: Dec. 2006

SHEET No. 2 OF 2 SHEETS

ORIGINAL PLAN | SURVEY PLOTTED BY | DRAWN BY | TRACED BY | DESIGNED BY | QUANTITIES BY | CHECKED BY | DATE | NOTE BOOK No.

C.O. 30

FED. ROAD DIST. NO.	STATE	FED. AID PROJ. NO.	FISCAL YEAR	SHEET NO.	TOTAL SHEETS
HAWAII	HAW.	TC-HI-1(258)	2006	C.O.30S-1	89

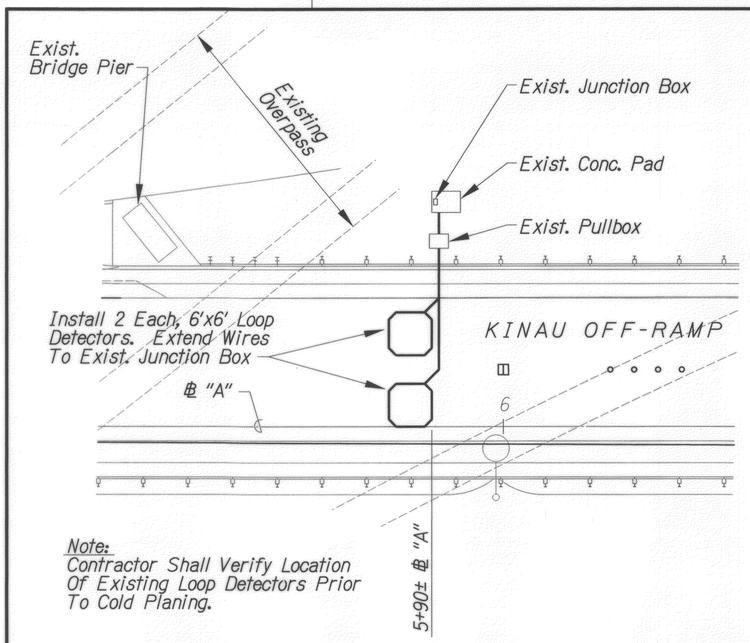

Note:
Contractor Shall Verify Location Of Existing Loop Detectors Prior To Cold Planing.

PLAN-LOOP DETECTOR LAYOUT @ 5+90 ℄ "A"

Scale: 1" = 10'

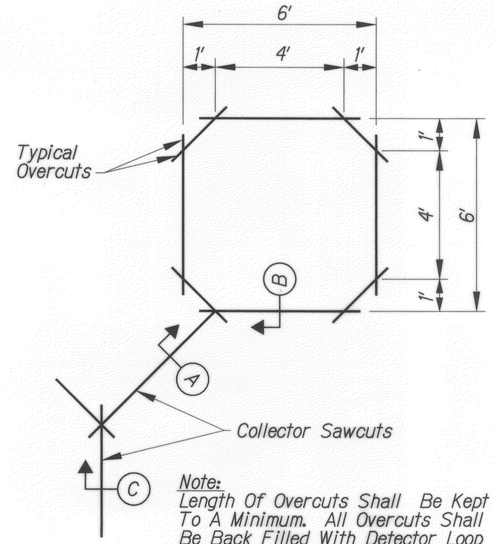

Note:
Length Of Overcuts Shall Be Kept To A Minimum. All Overcuts Shall Be Back Filled With Detector Loop Sealant.

TYPICAL DETECTOR LOOP SAWCUT DETAIL

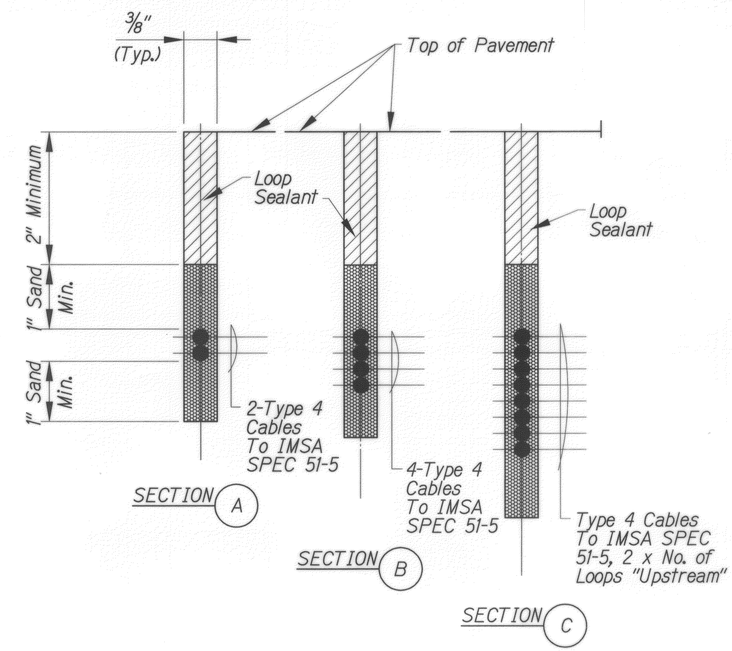

TYPICAL SECTION THROUGH DETECTOR LOOP

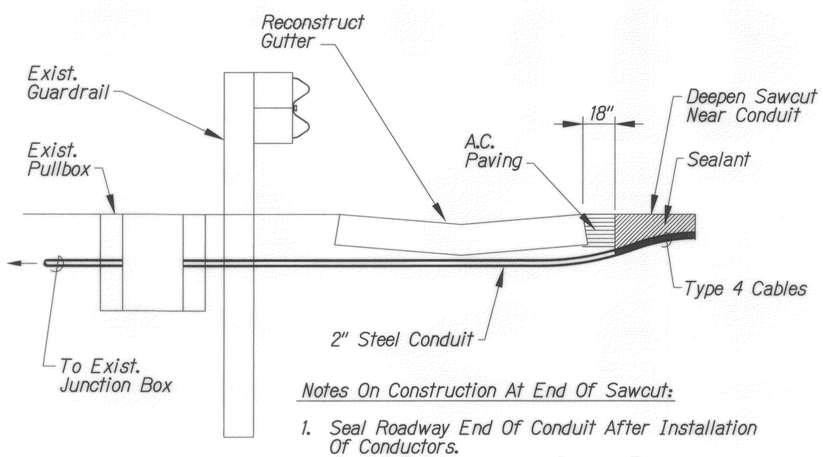

Notes On Construction At End Of Sawcut:

1. Seal Roadway End Of Conduit After Installation Of Conductors.
2. Install Bulkhead Across Conduit Trench.
3. Place Tar Hot In Sawcut.
4. Backfill Over Conduit With New A.C.
5. Reconstruct Gutter As Required.

DETAIL OF LOOP DETECTOR INSTALLATION AT EDGE OF ROADWAY

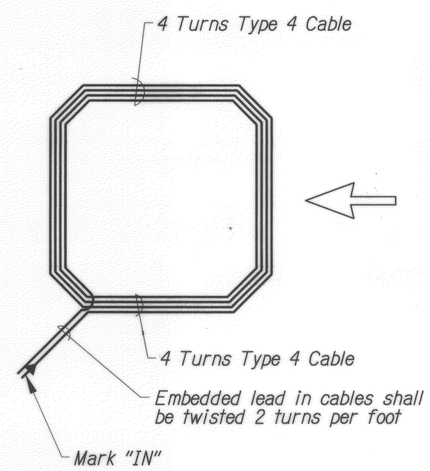

TYPICAL LOOP DETECTOR WIRING DIAGRAM

DATE	REVISION
1/21/11	5 Added Sheet, Loop Detector Detail

STATE OF HAWAII
DEPARTMENT OF TRANSPORTATION
HIGHWAYS DIVISION

MISCELLANEOUS DETAILS

INTERSTATE ROUTE H-1
Kinau Street Off-Ramp Improvements
Vicinity Of Queen's Medical Center
Federal-Aid Project No. TC-H1-1(258)

Scale: Not to Scale Date: Dec. 2006

CRAIG S. ARAKAKI
LICENSED PROFESSIONAL ENGINEER
No. 5510-C
HAWAII, U.S.A.
LICENSE EXP. DATE 04-30-12

THIS WORK WAS PREPARED BY ME OR UNDER MY SUPERVISION AND CONSTRUCTION OF THIS PROJECT WILL BE UNDER MY OBSERVATION AS DEFINED IN HAR TITLE 16, CHAPTER 115, RULES OF THE BOARD OF PROFESSIONAL ENGINEERS, ARCHITECTS AND SURVEYORS, STATE OF HAWAII.

Craig S. Arakaki

ORIGINAL PLAN | SURVEY PLOTTED BY | DRAWN BY | TRACED BY | DESIGNED BY | QUANTITIES BY | CHECKED BY | DATE | NOTE BOOK | No.

FED. ROAD DIST. NO.	STATE	FED. AID PROJ. NO.	FISCAL YEAR	SHEET NO.	TOTAL SHEETS
HAWAII	HAW.	TC-HI-1(258)	2006	C.O.30S-2	89

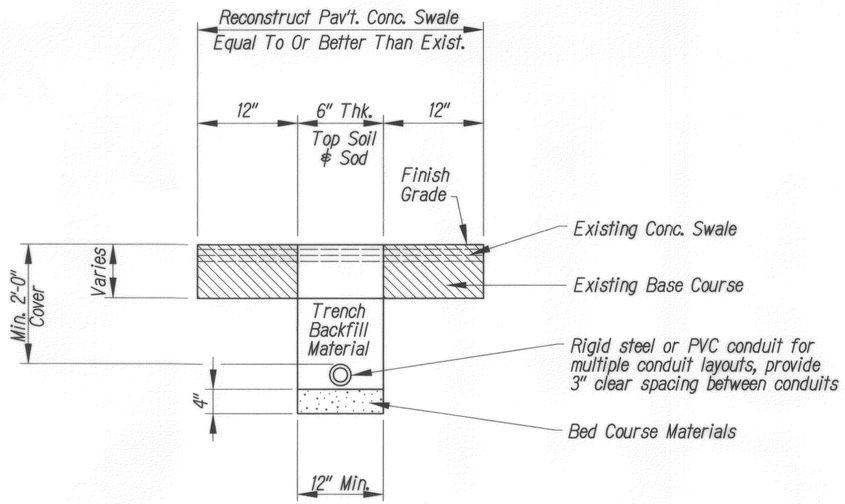

TYPICAL TRENCH SECTION FOR CONDUIT

Not to Scale

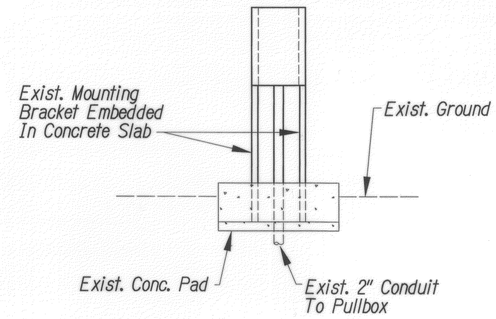

SECTION B-B

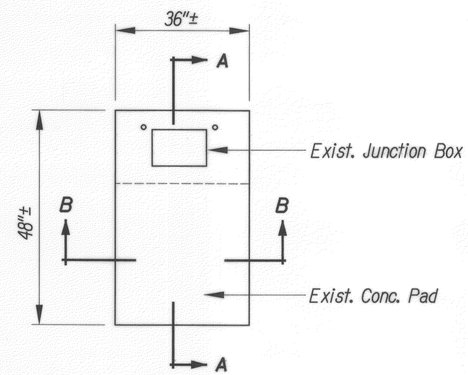

PLAN

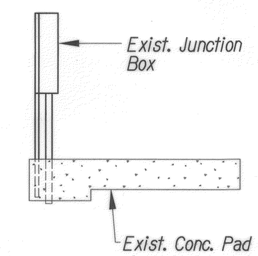

SECTION A-A

CONCRETE PAD AND JUNCTION BOX

Not to Scale

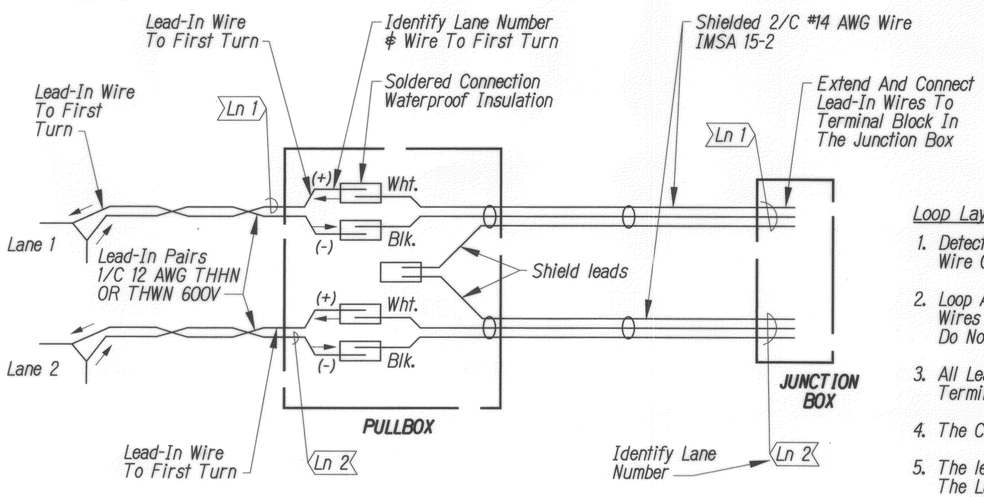

DETECTOR LOOP LEAD-IN WIRING & IDENTIFICATION IN PULLBOX & JUNCTION BOX

Not to Scale

Loop Layout Notes:

1. Detector Loop Shall Consist Of Four (4) Turns Of 1/C 12 AWG THHN Or THWN 600V Wire Or Equivalent Embedded In A 3/8" Minimum Sawcut, Except As Noted.
2. Loop And Lead-In To The First Pullbox Shall Be One Continuous Wire. Lead-In Wires From The Same Loop Shall Be Twisted In Pairs, Two (2) Turns Per Foot. Do Not Twist One Loop-Pairs With Another Loop-Pairs.
3. All Lead-In Wires Shall Be Crimped With Open End Lugs That Will Fit Into The Terminal Board Slots Snugly.
4. The Contractor Shall Connect The Inductance Wires On Each Terminal Slot.
5. The left Lane In The Direction Of Traffic Flow Is Designated As Lane 1, And The Lane Next To Its Right As Lane 2 And So On As Indicated On Plans.
6. Clean Sawcut Thoroughly Before Filling With Appropriate Sealant.
7. All Loop Lead-in Wires In All Enclosures Including Pullboxes Shall Be Identified And Labeled By Direction Of Traffic Flow And Lane Numbers As Shown On Plans.
8. All Cables And Wires Terminated Within An Enclosure Shall Have A Minimum 12" Additional Slack.

General Notes

1. The Locations Of New Inductance Loops, Shall Be Staked Out In The Field By The Contractor And Approved By The Engineer Prior To Installation.
2. The Contractor Shall Inform The Engineer At Least One (1) Day Prior To Saw-Cutting Pavement And Installing Inductance Loops.
3. Continuity Of Inductance Loops And Lead-In Wires Shall Be Tested And Warranted For One (1) Year From Date Of Acceptance By The Contractor.

DATE	REVISION
1/21/11	5 Added Sheet, Loop Detector Detail

ORIGINAL PLAN | SURVEY PLOTTED BY | DRAWN BY | TRACED BY | DESIGNED BY | QUANTITIES BY | CHECKED BY | NOTE BOOK No. | DATE

CRAIG S. ARAKAKI LICENSED PROFESSIONAL ENGINEER No. 5510-C HAWAII, U.S.A.

LICENSE EXP. DATE 04-30-12

THIS WORK WAS PREPARED BY ME OR UNDER MY SUPERVISION AND CONSTRUCTION OF THIS PROJECT WILL BE UNDER MY OBSERVATION AS DEFINED IN HAR TITLE 16, CHAPTER 115, RULES OF THE BOARD OF PROFESSIONAL ENGINEERS, ARCHITECTS AND SURVEYORS, STATE OF HAWAII.

Craig S. Arakaki

STATE OF HAWAII
DEPARTMENT OF TRANSPORTATION
HIGHWAYS DIVISION

MISCELLANEOUS DETAILS

INTERSTATE ROUTE H-1
Kinau Street Off-Ramp Improvements
Vicinity Of Queen's Medical Center
Federal-Aid Project No. TC-H1-1(258)

Scale: Not to Scale Date: Dec. 2006

SHEET No. 2 OF 2 SHEETS

C.O. 30 S-2

FED. ROAD DIST. NO.	STATE	FED. AID PROJ. NO.	FISCAL YEAR	SHEET NO.	TOTAL SHEETS
HAWAII	HAW.	TC-HI-I(258)	2006	C.O. 30 S-3	89

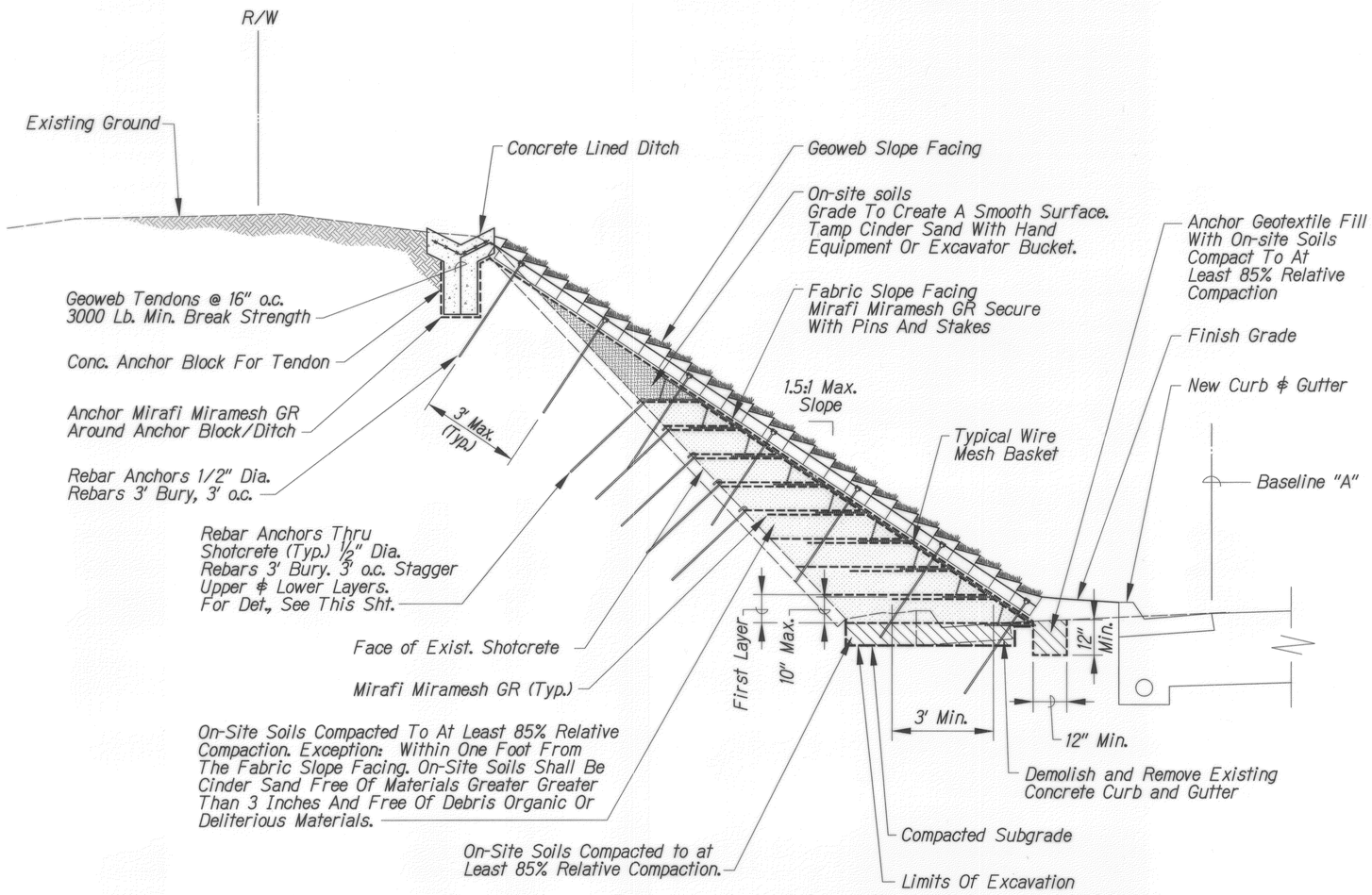

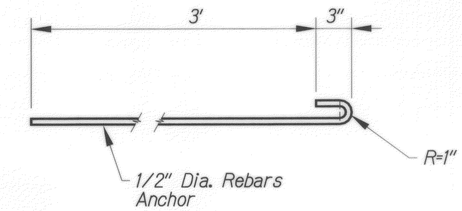

REBAR ANCHOR DETAIL

No Scale

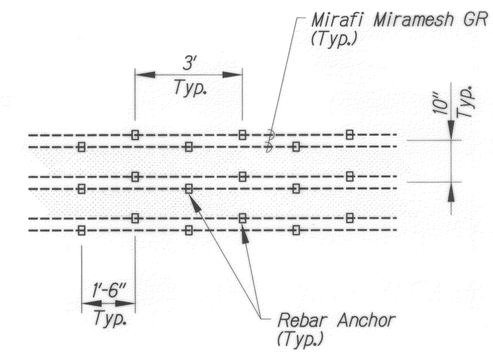

TYPICAL ANCHOR PLACEMENT THRU SHOTCRETE

No Scale

Notes:

1. Use temporary formwork to create 1.5h:1v slope.
2. If shotcrete is encountered during placement of the atra pins for the geoweb slope facing, drill through shotcrete.
3. A compaction test shall be taken for the first layer to determine the compaction effort necessary for 85% relative compaction of on-site soils. Compaction effort shall be measured in water compaction or number of passes with compaction equipment or other acceptable measures.
4. Visual inspection of the compaction effort shall be used for additional layers.

Sta. 9+56± To 10+50

TYPICAL SECTION SLOPE STABILIZATION OVER SHOTCRETE

Scale: 1" = 2'

GRAPHIC SCALE

1" = 2' 2' 1' 0 2' 4'

DATE	REVISION
1/21/11	5 Added Sheet

ORIGINAL PLAN | SURVEY PLOTTED BY | DRAWN BY | TRACED BY | DESIGNED BY | QUANTITIES BY | CHECKED BY | DATE | NOTE BOOK No.

CRAIG S. ARAKAKI
LICENSED PROFESSIONAL ENGINEER
No. 5510-C
HAWAII, U.S.A.

LICENSE EXP. DATE 04-30-12

THIS WORK WAS PREPARED BY ME OR UNDER MY SUPERVISION AND CONSTRUCTION OF THIS PROJECT WILL BE UNDER MY OBSERVATION AS DEFINED IN HAR TITLE 16, CHAPTER 115, RULES OF THE BOARD OF PROFESSIONAL ENGINEERS, ARCHITECTS AND SURVEYORS, STATE OF HAWAII.

STATE OF HAWAII
DEPARTMENT OF TRANSPORTATION
HIGHWAYS DIVISION

MISCELLANEOUS DETAILS

INTERSTATE ROUTE H-1
Kinau Street Off-Ramp Improvements
Vicinity Of Queen's Medical Center
Federal-Aid Project No. TC-H1-1(258)

Scale: As Shown Date: Dec. 2006

SHEET No. 2 OF 2 SHEETS

C.O. 30 S-3

FED. ROAD DIST. NO.	STATE	FED. AID PROJ. NO.	FISCAL YEAR	SHEET NO.	TOTAL SHEETS
HAWAII	HAW.	TC-HI-I(258)	2006	C.O. 30 S-4	89

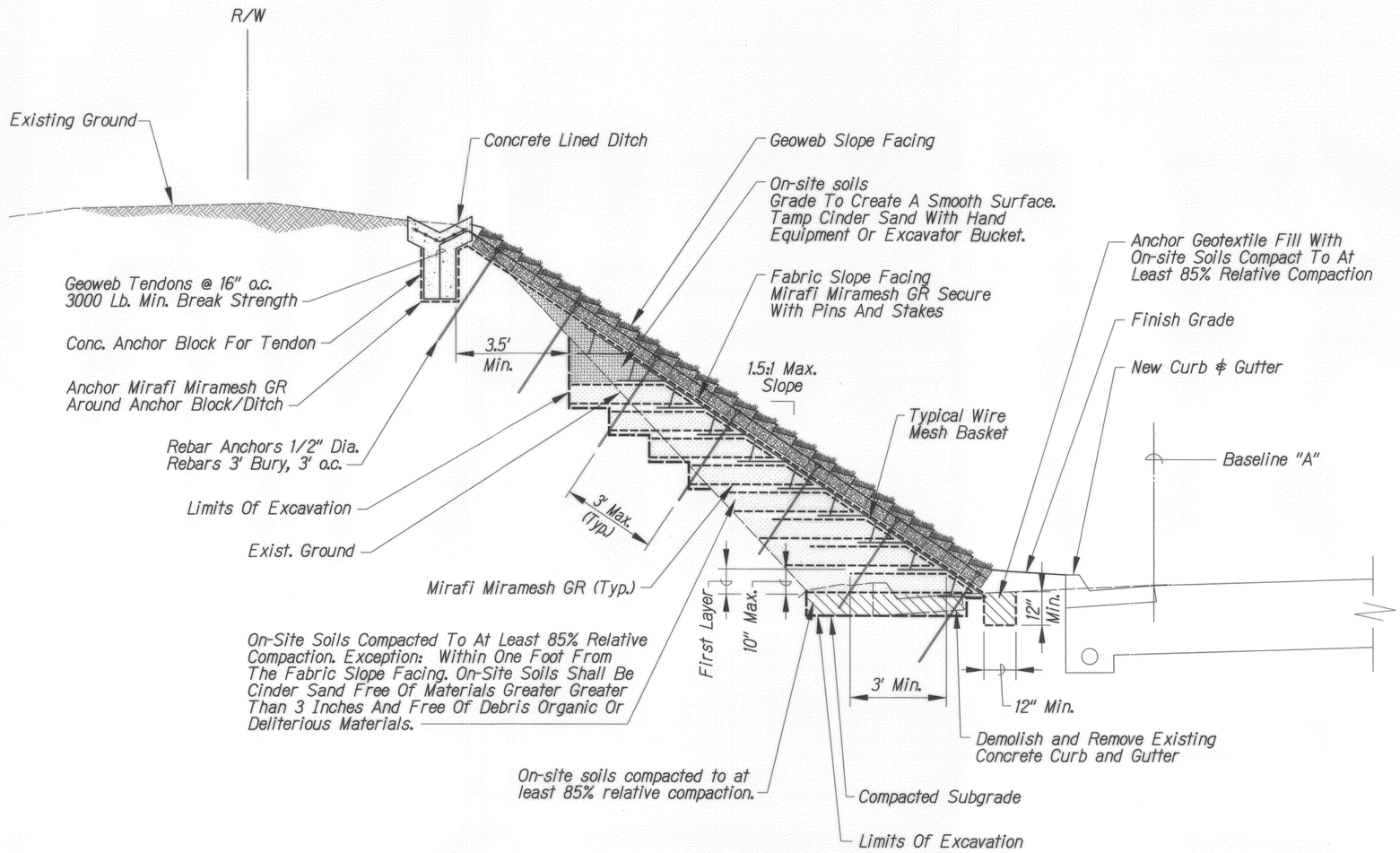

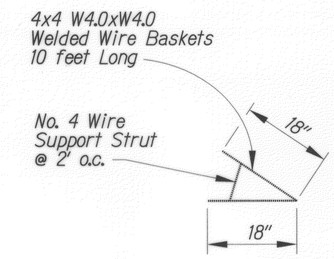

Typical Wire Mesh Basket

Notes:

1. Use temporary formwork to create 1.5h:1v slope.
2. If shotcrete is encountered during placement of the atra pins for the geoweb slope facing, drill through shotcrete.
3. A compaction test shall be taken for the first layer to determine the compaction effort necessary for 85% relative compaction of on-site soils. Compaction effort shall be measured in water compaction or number of passes with compaction equipment or other acceptable measures.
4. Visual inspection of the compaction effort shall be used for additional layers.

Sta. 10+50± To 11+80±

TYPICAL SECTION SLOPE STABILIZATION

Scale: 1" = 2'

GRAPHIC SCALE

1" = 2' 2' 1' 0 2' 4'

DATE	REVISION
1/21/11	5 Added Sheet

CRAIG S. ARAKAKI
LICENSED PROFESSIONAL ENGINEER
No. 5510-C
HAWAII, U.S.A.

LICENSE EXP. DATE 04-30-12

THIS WORK WAS PREPARED BY ME OR UNDER MY SUPERVISION AND CONSTRUCTION OF THIS PROJECT WILL BE UNDER MY OBSERVATION AS DEFINED IN HAR TITLE 16, CHAPTER 115, RULES OF THE BOARD OF PROFESSIONAL ENGINEERS, ARCHITECTS AND SURVEYORS, STATE OF HAWAII.

STATE OF HAWAII
DEPARTMENT OF TRANSPORTATION
HIGHWAYS DIVISION

MISCELLANEOUS DETAILS

INTERSTATE ROUTE H-1
Kinau Street Off-Ramp Improvements
Vicinity Of Queen's Medical Center
Federal-Aid Project No. TC-H1-1(258)

Scale: As Shown Date: Dec. 2006

SHEET No. 2 OF 2 SHEETS

C.O. 30 S-4

ORIGINAL PLAN | SURVEY PLOTTED BY | DRAWN BY | TRACED BY | DESIGNED BY | QUANTITIES BY | CHECKED BY | DATE | NOTE BOOK No.

FED. ROAD DIST. NO.	STATE	FED. AID PROJ. NO.	FISCAL YEAR	SHEET NO.	TOTAL SHEETS
HAWAII	HAW.	TC-HI-1(258)	2006	C.O. 30 S-5	89

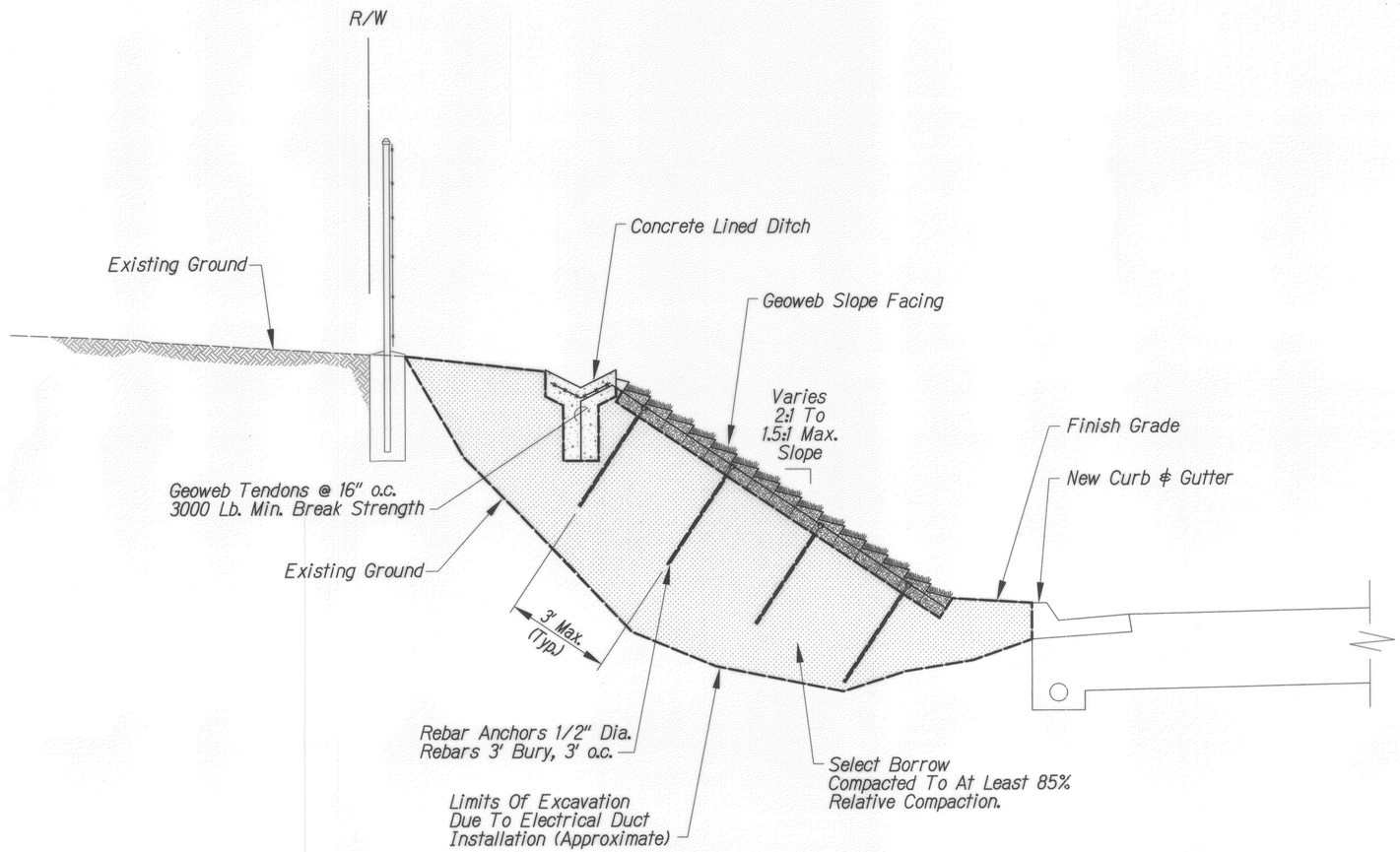

Sta. 11+80± To 12+30

TYPICAL SECTION OVER-EXCAVATED SLOPE

Scale: 1" = 2'

GRAPHIC SCALE

1" = 2' 2' 1' 0 2' 4'

DATE	REVISION
1/21/11	5 Added Sheet

STATE OF HAWAII
DEPARTMENT OF TRANSPORTATION
HIGHWAYS DIVISION

CRAIG S. ARAKAKI LICENSED PROFESSIONAL ENGINEER No. 5510-C HAWAII, U.S.A.

LICENSE EXP. DATE 04-30-12

THIS WORK WAS PREPARED BY ME OR UNDER MY SUPERVISION AND CONSTRUCTION OF THIS PROJECT WILL BE UNDER MY OBSERVATION AS DEFINED IN HAR TITLE 16, CHAPTER 115, RULES OF THE BOARD OF PROFESSIONAL ENGINEERS, ARCHITECTS AND SURVEYORS, STATE OF HAWAII.

Craig S. Arakaki

MISCELLANEOUS DETAILS

INTERSTATE ROUTE H-1
Kinau Street Off-Ramp Improvements
Vicinity Of Queen's Medical Center
Federal-Aid Project No. TC-H1-1(258)

Scale: As Shown Date: Dec. 2006

SHEET No. 2 OF 2 SHEETS

C.O. 30 S-5

ORIGINAL PLAN | SURVEY PLOTTED BY | DRAWN BY | TRACED BY | DESIGNED BY | QUANTITIES BY | CHECKED BY | DATE | NOTE BOOK No.

FED. ROAD DIST. NO.	STATE	FED. AID PROJ. NO.	FISCAL YEAR	SHEET NO.	TOTAL SHEETS
HAWAII	HAW.	TC-HI-1(258)	2006	C.O.30S-6	89

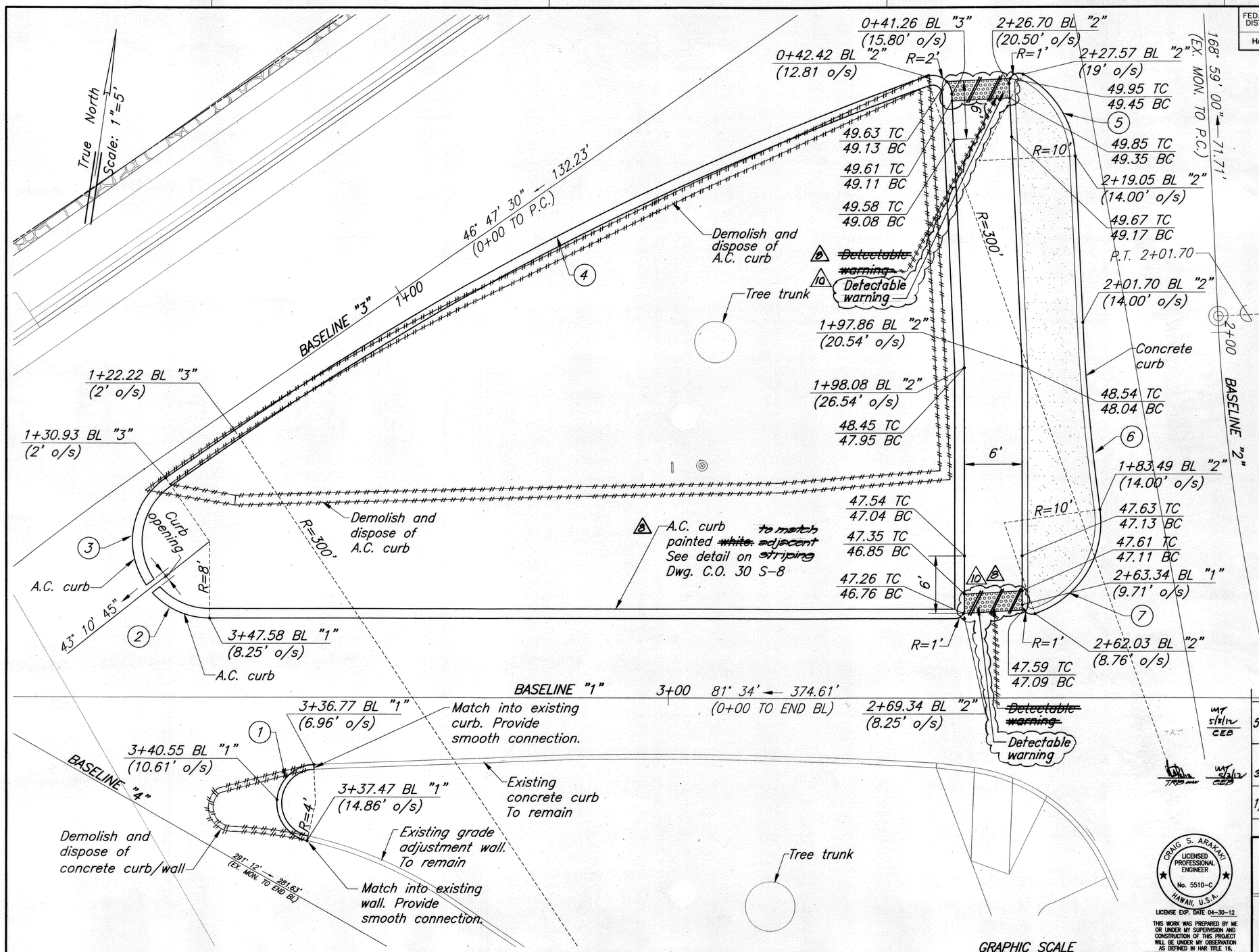

ISLAND "1" & "2" DETAILS

Scale: 1"=5'-0"

CURVE DATA		
Curve	1	2
Δ	165° 16' 00"	311° 15' 00"
Δ/2	82° 38' 00"	155° 37' 30"
R	4.00'	8.00'
T	30.94'	3.62'
Ch	7.93'	6.60'
Lc	11.54'	43.46'
Curve	3	4
Δ	90° 45' 00"	15° 25' 34"
Δ/2	45° 23' 30"	7° 42' 47"
R	8.00'	300.00'
T	8.11'	40.63'
Ch	11.39'	80.53'
Lc	12.67'	80.77'
Curve	5	6
Δ	60° 00' 00"	5° 13' 00"
Δ/2	30° 00' 00"	2° 36' 30"
R	10.00'	214.00'
T	5.77'	9.75'
Ch	10.00'	19.48'
Lc	10.47'	19.48'
Curve	7	
Δ	79° 23' 00"	
Δ/2	39° 41' 30"	
R	10.00'	
T	8.30'	
Ch	12.77'	
Lc	13.86'	

Approved By:

M. [signature] 6/7/11
Chief, Civil Engineering Branch, DPP — Date

[signature] 6/2/11
Chief, Traffic Review Branch, DPP — Date

DATE	REVISION
5/8/12	10 Added detectable warnings to replace previously removed warnings — WAT 5/8/12 CEB
3/28/12	9 Revised A.C. curb callout. Removed detectable warnings — TRB WAT 5/8/12 CEB
1/21/11	5 Added Sheet, Added island for Alapai Improvements

CITY AND COUNTY
DEPARTMENT OF TRANSPORTATION SERVICES
HONOLULU, HAWAII

ISLAND "1" & "2" DETAILS

INTERSTATE ROUTE H-1
Kinau Street Off-Ramp Improvements
Vicinity of Queen's Medical Center
Federal-Aid Project No. TC-H1-1(258)

Scale: As Shown — Date: Dec. 2006

CRAIG S. ARAKAKI — LICENSED PROFESSIONAL ENGINEER — No. 5510-C — HAWAII, U.S.A.
LICENSE EXP. DATE 04-30-12

THIS WORK WAS PREPARED BY ME OR UNDER MY SUPERVISION AND CONSTRUCTION OF THIS PROJECT WILL BE UNDER MY OBSERVATION AS DEFINED IN HAR TITLE 16, CHAPTER 115, RULES OF THE BOARD OF PROFESSIONAL ENGINEERS, ARCHITECTS AND SURVEYORS, STATE OF HAWAII.

[signature]

SHEET No. 2 OF 2 SHEETS

C.O. 30 S-6

ORIGINAL PLAN	SURVEY BY	PLOTTED BY	DATE
	DRAWN BY		
NOTE BOOK	TRACED BY		
	DESIGNED BY		
	QUANTITIES BY		
No.	CHECKED BY		

May 13, 2011 - 1:26pm
N:\CONWIP\C0\30\30S-ALAPAI\DOT\CO 30 S-6_ISLAND 1 & 2 DET.DWG

FED. ROAD DIST. NO.	STATE	FED. AID PROJ. NO.	FISCAL YEAR	SHEET NO.	TOTAL SHEETS
HAWAII	HAW.	TC-HI-1(258)	2006	C.O.30S-7	89

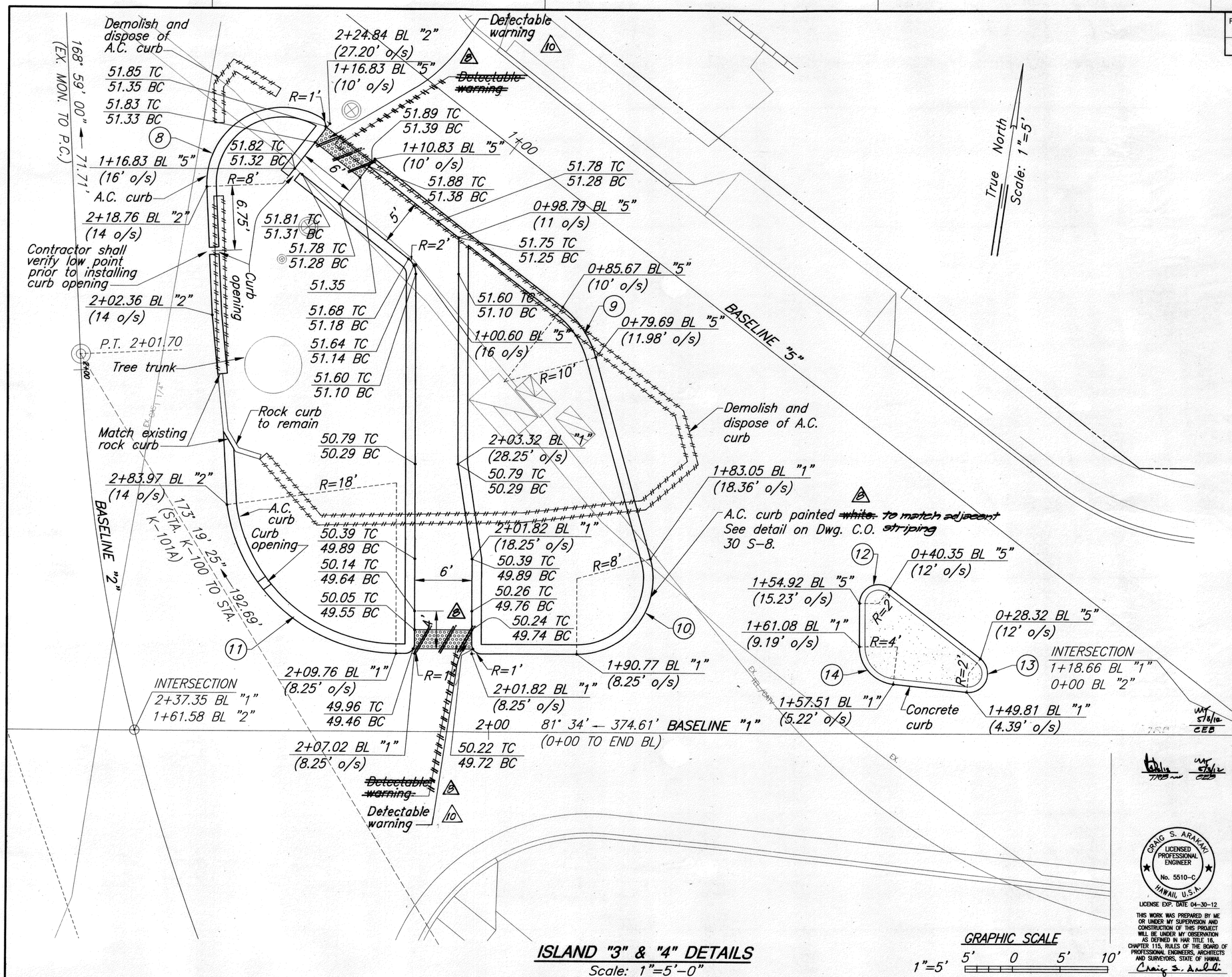

ISLAND "3" & "4" DETAILS

Scale: 1"=5'-0"

GRAPHIC SCALE

1"=5' 5' 0 5' 10'

CURVE DATA		
Curve	8	9
Δ	130° 32' 30"	36° 43' 30"
Δ/2	65° 16' 15"	18° 21' 45"
R	8.00'	8.00'
T	17.37'	3.32'
Ch	14.53'	6.30'
Lc	18.23'	6.41'
Curve	10	11
Δ	105° 19' 00"	82° 20' 17"
Δ/2	52° 39' 30"	41° 10' 08.5"
R	8.00'	18.00'
T	10.49'	15.74'
Ch	12.72'	23.70'
Lc	14.71'	25.87'
Curve	12	13
Δ	127 57' 30"	148° 09' 30"
Δ/2	63° 58' 45"	74° 04' 45"
R	2.00'	2.00'
T	4.10'	7.01'
Ch	3.59'	3.85'
Lc	4.47'	5.17'
Curve	14	
Δ	83° 53' 00"	
Δ/2	41° 56' 30"	
R	4.00'	
T	3.59'	
Ch	5.35'	
Lc	5.86'	

Approved By:

M. 7 6/7/11
Chief, Civil Engineering Branch, DPP Date

6/11
Chief, Traffic Review Branch, DPP Date

DATE	REVISION
5/8/12	10 Added detectable warnings to replace previously removed warnings
3/28/12	8 Revised A.C. curb callout. Removed detectable warnings
1/21/11	5 Added Sheet, Added Islands for Alapai Improvements.

CITY AND COUNTY
DEPARTMENT OF TRANSPORTATION SERVICES
HONOLULU, HAWAII

ISLAND "3" & "4" DETAILS

INTERSTATE ROUTE H-1
Kinau Street Off-Ramp Improvements
Vicinity of Queen's Medical Center
Federal-Aid Project No. TC-H1-1(258)

Scale: As Shown Date: Dec. 2006

SHEET No. 2 OF 2 SHEETS

CRAIG S. ARAKAKI
LICENSED PROFESSIONAL ENGINEER
No. 5510-C
HAWAII, U.S.A.
LICENSE EXP. DATE 04-30-12

THIS WORK WAS PREPARED BY ME OR UNDER MY SUPERVISION AND CONSTRUCTION OF THIS PROJECT WILL BE UNDER MY OBSERVATION AS DEFINED IN HAR TITLE 16, CHAPTER 115, RULES OF THE BOARD OF PROFESSIONAL ENGINEERS, ARCHITECTS AND SURVEYORS, STATE OF HAWAII.

Craig S. Arakaki

May 10, 2011-1:29pm
N:\CAD\DWG\2010\1026-ALAPAI\DOT\CO 30 S-7_ISLAND 3 & 4 DET.dwg

ORIGINAL PLAN	SURVEY PLOTTED BY	DATE
	DRAWN BY	
NOTE BOOK	DESIGNED BY	
	QUANTITIES BY	
No.	CHECKED BY	

C.O. 30 S-7

FED. ROAD DIST. NO.	STATE	FED. AID PROJ. NO.	FISCAL YEAR	SHEET NO.	TOTAL SHEETS
HAWAII	HAW.	TC-HI-1(258)	2006	C.O.30S-8	89

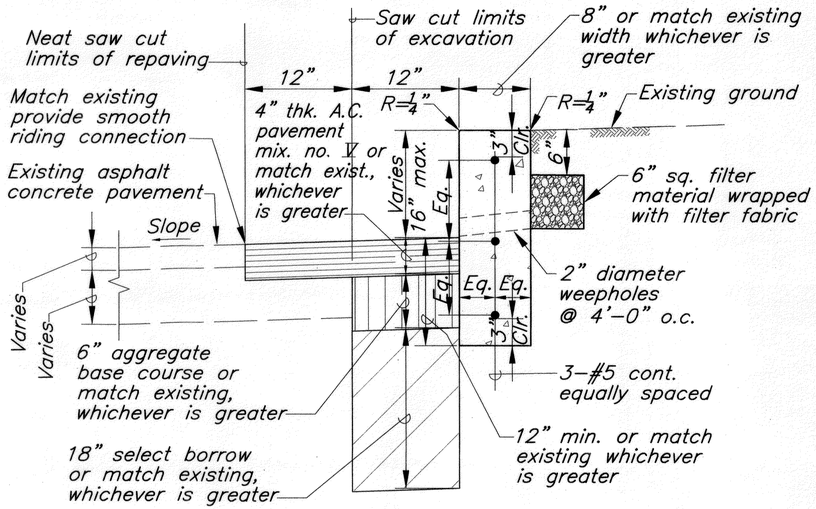

SECTION-GRADE AJUSTMENT WALL

SCALE "1 1/2" = 1'-0"

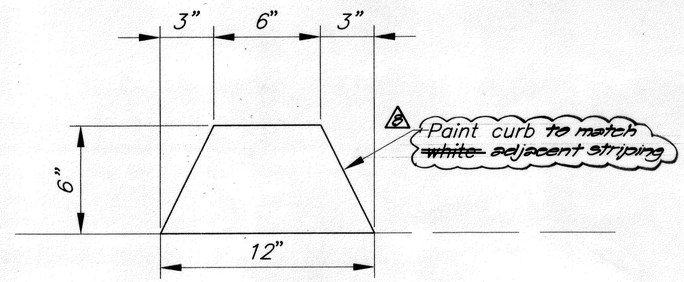

ASPHALT CONCRETE CURB DETAILS

Scale "3" = 1'-0"

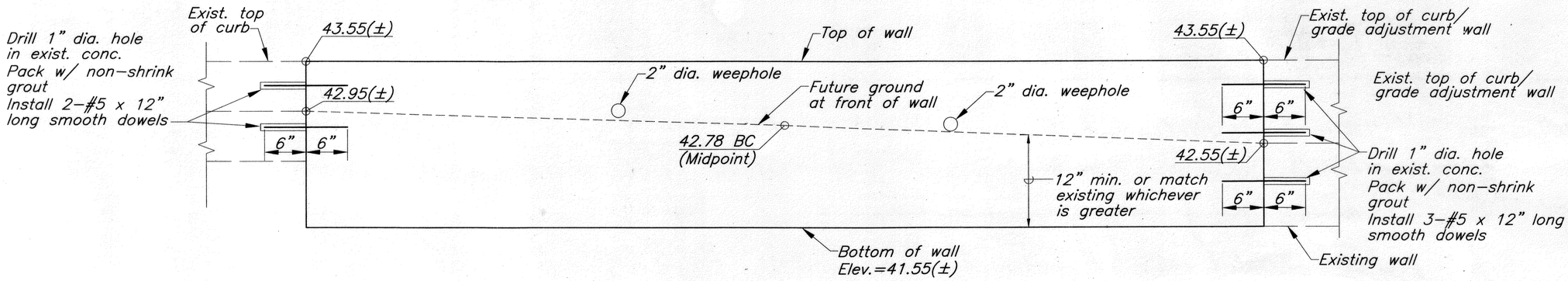

PROFILE-GRADE AJUSTMENT WALL

Scale "1 1/2" = 1'-0"

DATE	REVISION
3/29/12	6 Revised asphalt concrete curb detail.
1/21/11	5 Added Sheet, Added detail for Alapai repaving

Approved By:

Chief, Civil Engineering Branch, DPP — Date 6/7/11

Chief, Traffic Review Branch, DPP — Date 6/2/11

GRAPHIC SCALE

1 1/2"=1'-0" 12" 0 1'

CRAIG S. ARAKAKI LICENSED PROFESSIONAL ENGINEER No. 5510-C HAWAII, U.S.A.

LICENSE EXP. DATE 04-30-12

THIS WORK WAS PREPARED BY ME OR UNDER MY SUPERVISION AND CONSTRUCTION OF THIS PROJECT WILL BE UNDER MY OBSERVATION AS DEFINED IN HAR TITLE 16, CHAPTER 115, RULES OF THE BOARD OF PROFESSIONAL ENGINEERS, ARCHITECTS AND SURVEYORS, STATE OF HAWAII.

CITY AND COUNTY
DEPARTMENT OF TRANSPORTATION SERVICES
HONOLULU, HAWAII

MISCELLANEOUS DETAILS

INTERSTATE ROUTE H-1
Kinau Street Off-Ramp Improvements
Vicinity of Queen's Medical Center
Federal-Aid Project No. TC-H1-1(258)

Scale: As Shown Date: Dec. 2006

SHEET No. 2 OF 2 SHEETS

C.O. 30 S-8

ORIGINAL PLAN	SURVEY PLOTTED BY	DATE
	TRACED BY	
NOTE BOOK	DESIGNED BY	
	QUANTITIES BY	
No.	CHECKED BY	

May 10, 2011-1:31pm
N:\CAD\DWG\2010\026-ALAPAI\DOT\CO 30 S-8_MISCELLANEOUS DET.DWG

FED. ROAD DIST. NO.	STATE	FED. AID PROJ. NO.	FISCAL YEAR	SHEET NO.	TOTAL SHEETS
HAWAII	HAW.	TC-HI-1(258)	2006	C.O.30S-9	89

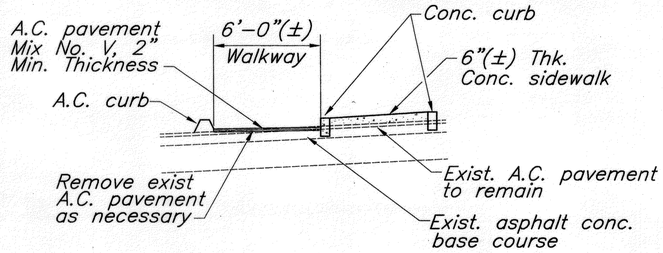

ISLANDS "1" & "2"

TYPICAL WALKWAY SECTION

Scale: 1/4"=1'-0"

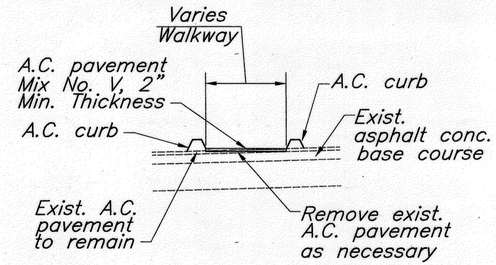

ISLAND "3"

TYPICAL WALKWAY SECTION

Scale: 1/4"=1'-0"

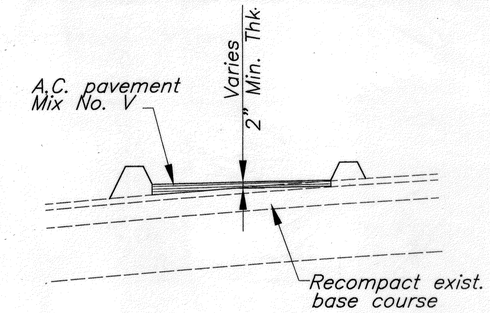

TYPICAL WALKWAY DETAIL

Scale: 1/2"=1'-0"

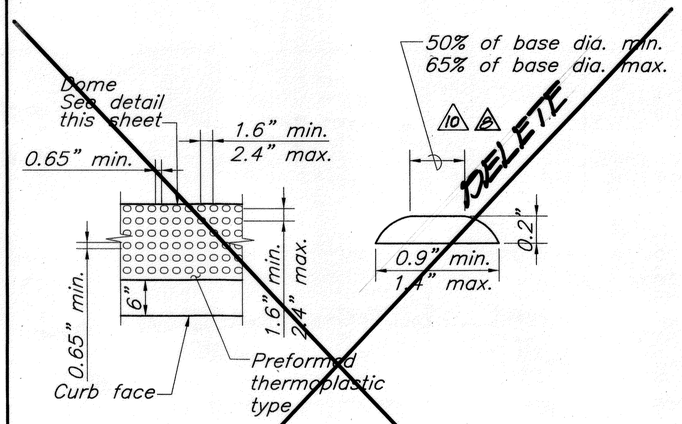

DOME PLAN

DOME SECTION

NOTE:

Detectable warnings shall be "Safety Yellow". The material used shall be an integral part of the detectable warning surface.

PREFORMED THERMOPLASTIC TYPE DETECTABLE WARNING

No scale

8

NOTES FOR TRUNCATED DOME DETECTABLE WARNING

1. Detectable warnings shall consist of a surface of truncated domes.
2. Detectable warnings shall be 24 inches in the direction of travel and extend the full width of the curb ramp or flush surfaces (Does not include flares).
3. Truncated domes shall have a base diameter of 0.9 inch minimum and 1.4 inches maximum, a top diameter of 50 percent of the base diameter minimum to 65 percent of the base diameter maximum, and height of 0.2 inch. 10 8 DELETE
4. Truncated domes in a detectable warning surface shall have a center-to-center spacing of 1.6 inches minimum and 2.4 inches maximum, and a base-to-base spacing of 0.65 inch minimum, measured between the most adjacent domes on a square arrangement.
5. Domes shall be aligned on a square grid in the predominant direction of travel to permit wheels to roll between the domes.
6. There shall be a minimum of 70 percent contrast in light reflectance between the detectable warning and an adjoining surface, or the detectable warning shall be "safety yellow".
7. The material used to provide visual contrast shall be an integral part of the detectable warning surface.
8. The detectable warning shall be located so that the edge nearest the curb line or other potential hazard is 6 to 8 inches from the curb line.

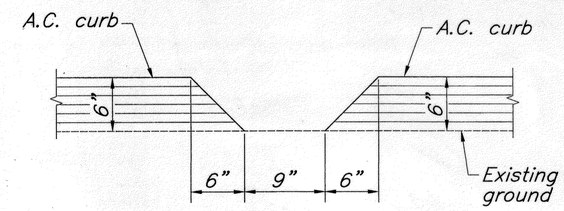

CURB OPENING DETAIL

Scale: 1 1/2"=1'-0"

DATE		REVISION
5/8/12	10	Replace previously removed detectable warning details
3/28/12	8	Removed detectable warning details
1/21/11	5	Added Sheet, Added walkway sections & details

Approved By:

M. Fujii 6/7/11
Chief, Civil Engineering Branch, DPP — Date

6/7/11
Chief, Traffic Review Branch, DPP — Date

GRAPHIC SCALE

1/4"=1'-0" 4' 2' 0 4' 8'

CRAIG S. ARAKAKI
LICENSED PROFESSIONAL ENGINEER
No. 5510-C
HAWAII, U.S.A.

LICENSE EXP. DATE 04-30-12

THIS WORK WAS PREPARED BY ME OR UNDER MY SUPERVISION AND CONSTRUCTION OF THIS PROJECT WILL BE UNDER MY OBSERVATION AS DEFINED IN HAR TITLE 16, CHAPTER 115, RULES OF THE BOARD OF PROFESSIONAL ENGINEERS, ARCHITECTS AND SURVEYORS, STATE OF HAWAII.

CITY AND COUNTY
DEPARTMENT OF TRANSPORTATION SERVICES
HONOLULU, HAWAII

MISCELLANEOUS DETAILS

INTERSTATE ROUTE H-1
Kinau Street Off-Ramp Improvements
Vicinity of Queen's Medical Center
Federal-Aid Project No. TC-H1-1(258)

Scale: As Shown Date: Dec. 2006

SHEET No. 2 OF 2 SHEETS

C.O. 30 S-9

Nov 10, 2011-1:32pm
N:\CADD\Work\2010\32026-NLAPA\DOT\CO 30 S-9_MISCELLANEOUS DET.DWG

ORIGINAL PLAN	SURVEY PLOTTED BY	DATE
	DRAWN BY	
REV.	TRACED BY	
NOTE BOOK	DESIGNED BY	
	QUANTITIES BY	
No.	CHECKED BY	