FED. ROAD DIST. NO.	STATE	PROJ. NO.	FISCAL YEAR	SHEET NO.	TOTAL SHEETS
HAWAII	HAW.	H11-01-08	2009	ADD. 9	73

INDEX TO DRAWINGS

1 ABBREVIATIONS

Add.	Additional	F.F.	Front Face	Reinf.	Reinforcement
Approx.	Approximate	Fin.	Finish		
		Ftg.	Footing	Sch.	Schedule
B.F.	Back Face			Sht.	Sheet
Bm.	Beam	Galv.	Galvanized	spc'g	Spacing
Brg.	Bearing	GDI	Ground Drain Inlet	Sta.	Station
Btwn.	Between	Gr., gr.	Grade	STD., Std.	Standard
℄	Center line	Inv.	Invert	T.O.F.	Top of Footing
Cl. Stirrup	Closed Stirrup			T.O.W.	Top of Wall
Cl.	Clearance	Jt.	Joint	Typ.	Typical
Conc.	Concrete				
Cont.	Continuous	Max.	Maximum	Vert.	Vertical
		Min., min.	Minimum		
Dia., ø	Diameter			W.P.	Working Point
		O.C., o.c.	On Center		
E.F.	Each Face	O/S	Offset		
Eq.	Equal				
E.W.	Each Way				
Elev.	Elevation				
Exist.	Existing				
Exp.	Expansion				

LEGEND FOR AS-BUILT POSTINGS

~~	Squiggly line for as-built deletion
~~100.00~~	Double line for as-built deletion
Roadway	Text for as-built posting

SYMBOLS

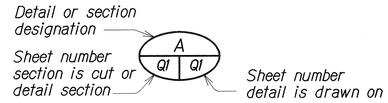

BRIDGE GENERAL NOTES

GENERAL SPECIFICATIONS:

Hawaii Department of Transportation, Hawaii Standard Specification for Road, Bridge and Public Works Construction, 2005, together with Special Provisions prepared for this contract.

DESIGN SPECIFICATIONS:

(A) AASHTO 2007 LRFD Bridge Design Specifications (Fourth Edition) and its subsequent interim specifications with interim suppliements and modifications by the HDOT Highway Division.

(B) "Design Criteria for Bridges and Structures" dated April 15, 2008.

MATERIALS:

(A) All concrete strengths shall be noted below:

Item No.	Structural Parts	Compressive Strength f'c (28 Days)	Maximum W/C Ratio
(1)	Stressing Block (Performance Test Wall)	5000 PSI	0.40
(2)	Concrete Wall (Including Build Up of Existing)	4500 PSI	0.40
(3)	Footing Concrete/Concrete Barrier Wall Closure (Wall Extention)	4500 PSI	0.40
(4)	Except as noted otherwise, all others	4000 PSI	0.40

(B) For Permanent Tieback Anchors, refer to Section 681 of the Special Provisions.

(C) A shrinkage reducing admixture (SRA) shall be added to all concrete mixes. The required dosage shall be 128 ounces per cubic yard of concrete and follow all manufacturer's recommendations.

(D) A migrating corrosion inhibitor amine carboxylate water-base admixture shall be added to the concrete mix for all concrete mixes. The minimum dosage shall be 1.5 pints per cubic yard of concrete. The admixture shall not affect the set time of the concrete.

(E) The use of any calcium chloride in any concrete is prohibited.

(F) All reinforcing steel shall be ASTM A615, Grade 60 unless otherwise noted.

(G) All anchor bolts, washers and nuts shall be ASTM A193 (UNS S31600) stainless steel unless otherwise specified.

(H) All structural steel shapes and plates shall be ASTM A36 hot dip galvanized after fabrication, unless otherwise noted.

(I) All dowels secured with neat epoxy into existing wall footings shall be ASTM A955 UNS S31603, Grade 60 deformed stainless steel reinforcement. All other dowels secured with neat epoxy shall be ASTM A615, Grade 60.

(J) Hydrophilic rubber waterstop shall have a minimum dimensions of 20 mm x 10 mm. It shall be composed of non-vulcanized rubber and urethane polymer hydrophilic agent. It shall have a stainless steel wire mesh embedded in the product to direct expansion in the thickness direction and to restrict expansion in the longitudinal direction. It shall develop no less than 400 psi expansion pressure and withstand a minimum 150 foot hydrostatic head.

*NOTE:
Sheet No. C.O. ADD. 21 S-1 (Q13A) was Added during "As-Built" Posting

REINFORCEMENT:

(A) The covering measured from the surface of the concrete to the face of any reinforcing bars shall be as follows, except as otherwise shown:

(1) Concrete cast against and permanently exposed to earth = 3"

(2) All others unless otherwise noted = 2"

(B) Reinforcing bars shall be detailed in accordance with the latest edition of the AASHTO LRFD bridge design specifications unless otherwise noted.

(C) Minimum clear spacing between parallel bars shall be 1½ times the diameter of bars (for non bundled bars). In no case shall the clear distance between the bars be less than 1½ times the maximum size of the coarse aggregate or 1½".

(D) All dimensions relating to reinforcing bars are to centers of bars unless otherwise noted.

(E) Reinforcing bars shall be securely tied at all intersections and lap splices except where the spacing of intersections is less than one foot in each direction, in which case alternate intersections shall be tied.

CONSTRUCTION NOTES:

(A) The Contractor shall verify all dimensions and site conditions and shall report any discrepancies in writing to the Engineer before commencing work or ordering materials.

(B) The Contractor shall verify all site conditions and not rely upon these plans for existing dimensions, elevations and azimuths, stream channel location, roads, roadway gutters, curbs and sidewalks, etc. Conditions may differ from those shown on these Plans.

(C) The Contractor shall be solely responsible for the protection of adjacent properties, utilities and existing and new structures from damage due to construction. Repairing any damage shall be at the Contractor's own expense, to the satisfaction of the Engineer.

(D) The Contractor shall verify the location of all utility lines and notify the respective owners before commencing with excavation, and any temporary piling or sheeting.

(E) Except as otherwise noted, all vertical dimensions are measured plumb.

(F) Before starting any tieback work, Contractor shall have successfully completed the Preformance and Extended Creep Test on the Test Panel located at Sta. 10+42.50 See Plan Sheet Q31 and Section 681 of the Special Provisions.

(G For concrete finish, see Standard Specifications and Special Provisions.

(H) Construction joints may be relocated or additional ones added subject to the approval of the Engineer.

(I) Unless otherwise noted, all exposed concrete edges shall be chamfered ¾" x ¾".

(J) The Contractor shall verify the location and size of all existing reinforcing bars prior to drilling. Drilled holes maybe moved 1" in any direction to nullify damage to existing reinforcing.

(K) Drilled holes in existing concrete for reinforcing steel dowels shall not be left unfilled for more than 8 hours. Neat epoxy in drilled holes shall be able to develop the full strength of the dowels prior to pouring concrete around reinforcing steel dowels. Follow all manufacturer's recommendations for dowel and epoxy placement.

(L) Contractor shall unplug, clean, maintain and extend existing drains/weepholes during construction of the project. This work shall be incidental to the various Contract items.

DATE	REVISION
1 3/31/09	Revised Index to Drawings and Added to Abbreviations

STATE OF HAWAII
DEPARTMENT OF TRANSPORTATION
HIGHWAYS DIVISION

INDEX, ABBREVIATIONS, SYMBOLS and BRIDGE GENERAL NOTES

INTERSTATE ROUTE H-1
EXTENSION AND REPAIR OF
SCHOOL STREET ON-RAMP RETAINING WALL
Project No. H11-01-08

Scale: As Noted — Date: Feb. 2009

SHEET No. Q1 OF 34 SHEETS

ORIGINAL PLAN — SURVEY PLOTTED BY XXX — DRAWN BY XXX — DATE XXX 2009
NOTE BOOK — TRACED BY XXX 2009 — DESIGNED BY XXX 2009 — QUANTITIES BY XXX 2009 — CHECKED BY XXX 2009
No. 1 Q01 Q13A.dgn

"AS-BUILT"

ADD. 9

FED. ROAD DIST. NO.	STATE	PROJ. NO.	FISCAL YEAR	SHEET NO.	TOTAL SHEETS
HAWAII	HAW.	H11-01-08	2009	ADD. 10	73

CONSTRUCTION NOTES (Cont.):

(M) Location of drilled holes shown in plans are approximate. Prior to placing holes in concrete, the Contractor shall locate all reinforcing steel, anchor bolts, thru bolts holes, etc. and adjust the location of the drilled holes to clear them. Final hole locations are subject to the approval of the Engineer. Locations of 5"ø holes for anchors shall be as shown in these Plans.

(N) Existing guardrail and posts shall be removed and disposed of as directed by the Engineer and shall be incidental to Pay Item 202.0100.

(O) When only portions of concrete are to be demolished, the intersections between the demolished concrete and the concrete that is to remain shall have a ¾ inch deep sawcut around the entire perimeter of the demolished area.

(P) At the time concrete is placed, reinforcing shall be free from mud, oil, laitance or other coatings adversely affecting bond capacity.

(Q) The concrete surfaces which new concrete is poured against shall be roughened to a full amplitude of ¼ of an inch and cleaned.

(R) All exposed existing reinforcing shall remain in place and shall not be damaged in any way unless otherwise noted.

(S) All existing reinforcing that is to remain in place shall have a minimum concrete cover of 2".

(T) New concrete surfaces shall match the finish of the existing structure. Any reveals, patterns, or decorative features shall also match the existing structure.

(U) All existing walls shall be braced to prevent failure during all phases of construction until rock anchors have been tensioned and the lock-off load is in place. See Section 681 of the Special Provisions.

(V) Backfilling of all new or built-up retaining walls shall not take place until the concrete 28 day strength is attained and rock-anchor lock-off loads are in place.

(W) For all walls being repaired, expansion and contraction joint locations shall be extended and maintained.

(X) Final wall appearance shall present a continuous surface without any deflections except for the transition areas specified in these plans. Additional wall thickness shall vary according to the existing wall deflections.

(Y) Existing protruding drips on all walls shall be demolished at the top of all existing walls that are being thickened. New and heightened retaining walls shall have the top of the wall sloped ¼:12 toward the backfill.

GENERAL:

(A) All items noted incidental will not be paid for separately.

(B) Standard Plans refer to all structures in general, except for modifications as may be required for special conditions. For such modifications refer to the corresponding detailed drawings.

(C) Plans of the existing walls are available for review from the Highways Division Design Branch located at the State Department of Transportation, Highways Division Kakuhihewa Building, Room 609, 601 Kamokila Boulevard, Kapolei, HI 96707 (phone number 692-7586).

(D) Temporarily relocate highway lighting conduit, pullboxes, etc. obstructing contract items. Care shall be taken to not damage existing tree roots and the existing retaining wall.

(E) Located approximately 2'-0" in back of the existing retaining wall is a 2" PVC Schedule 40 Conduit supplying power to Highway Lighting. It is at a depth of 3'-0"± because the exact depth is unknown. The Contractor is advised to use extreme caution in drilling the anchor holes. Existing Lighting Standard Supports are located at Ramp 7 Sta. 11+37, Sta. 10+09, Sta. 8+57, Sta. 7+05 and Sta. 5+57.

△1 (F) All cracked and loose concrete portions of the existing retaining wall shall be removed prior to the placing of new concrete facing.

ORIGINAL PLAN	SURVEY PLOTTED BY XXX	DATE XXX 2002
	DRAWN BY XXX	XXX 2002
NOTE BOOK	TRACED BY XXX	XXX 2002
	DESIGNED BY XXX	XXX 2002
	QUANTITIES BY XXX	XXX 2002
No.	CHECKED BY XXX	XXX 2002

△1	
3/31/09	Added General Note (F)
DATE	REVISION

STATE OF HAWAII
DEPARTMENT OF TRANSPORTATION
HIGHWAYS DIVISION

BRIDGE GENERAL NOTES

INTERSTATE ROUTE H-1
EXTENSION AND REPAIR OF
SCHOOL STREET ON-RAMP RETAINING WALL
Project No. H11-01-08

Scale: As Noted Date: Feb. 2009

SHEET No. Q2 OF 34 SHEETS

ADD. 10

FED. ROAD DIST. NO.	STATE	PROJ. NO.	FISCAL YEAR	SHEET NO.	TOTAL SHEETS
HAWAII	HAW.	H11-01-08	2009	ADD. 11	73

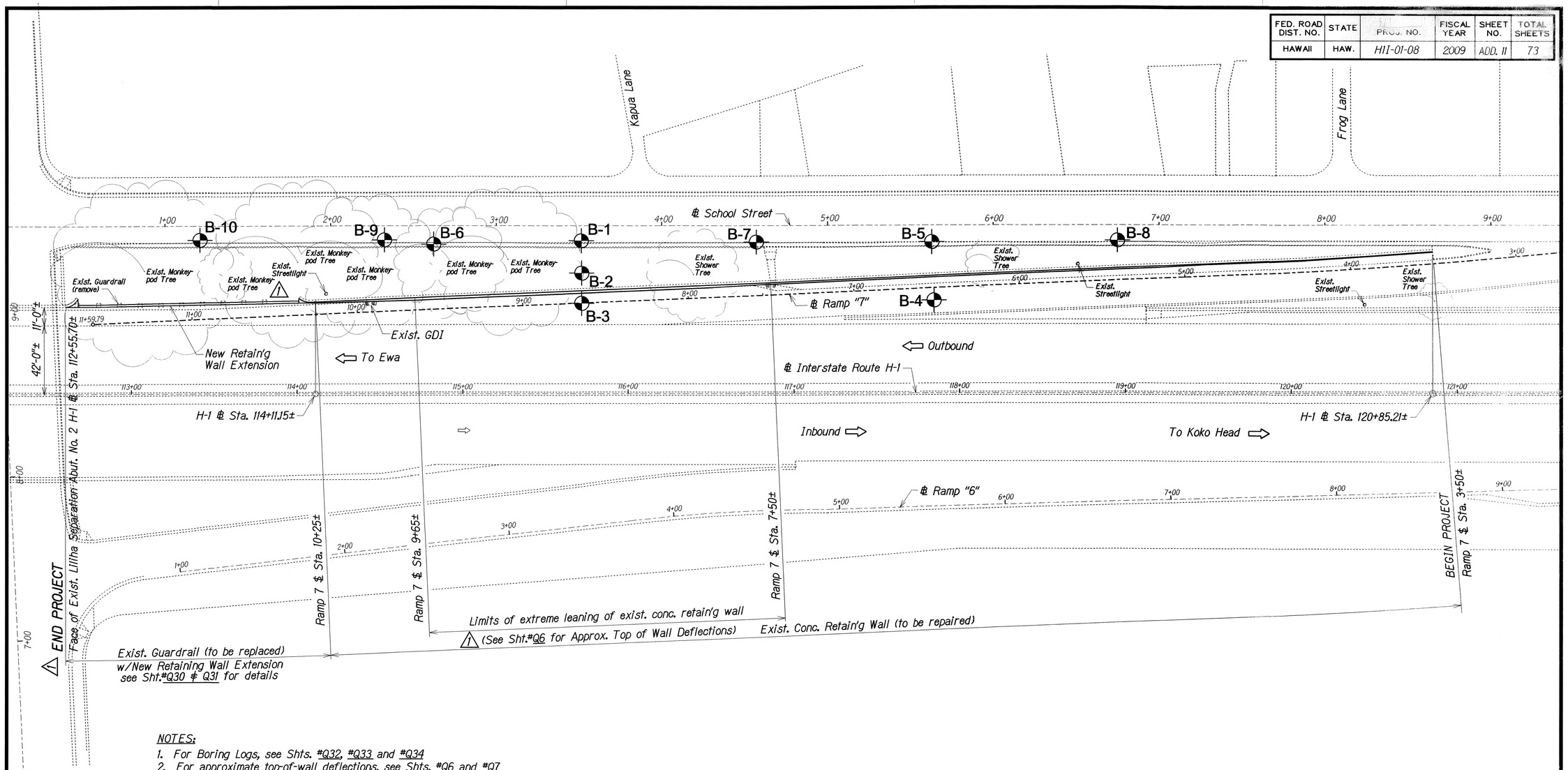

NOTES:

1. For Boring Logs, see Shts. #Q32, #Q33 and #Q34
2. For approximate top-of-wall deflections, see Shts. #Q6 and #Q7

LEGEND

Approximate Boring Location

ORIGINAL PLAN		DATE
	SURVEY PLOTTED BY XXX	XXX 2009
	DRAWN BY	
	TRACED BY	
NOTE BOOK	DESIGNED BY XXX	XXX 2009
	QUANTITIES BY XXX	XXX 2009
N.	CHECKED BY XXX	XXX 2009

DATE	REVISION
3/31/09	Revised and/or Added Callouts and Legend

STATE OF HAWAII
DEPARTMENT OF TRANSPORTATION
HIGHWAYS DIVISION

RETAINING WALL REPAIR and EXTENSION

EXISTING SITE PLAN

INTERSTATE ROUTE H-1
EXTENSION and REPAIR of
SCHOOL STREET ON-RAMP RETAINING WALL
Project No. H11-01-08

Scale: As Noted — Date: Feb. 2009

SHEET No. Q3 OF 34 SHEETS

ADD. 11

FED. ROAD DIST. NO.	STATE	PROJ. NO.	FISCAL YEAR	SHEET NO.	TOTAL SHEETS
HAWAII	HAW.	H11-01-08	2009	ADD. 12	73

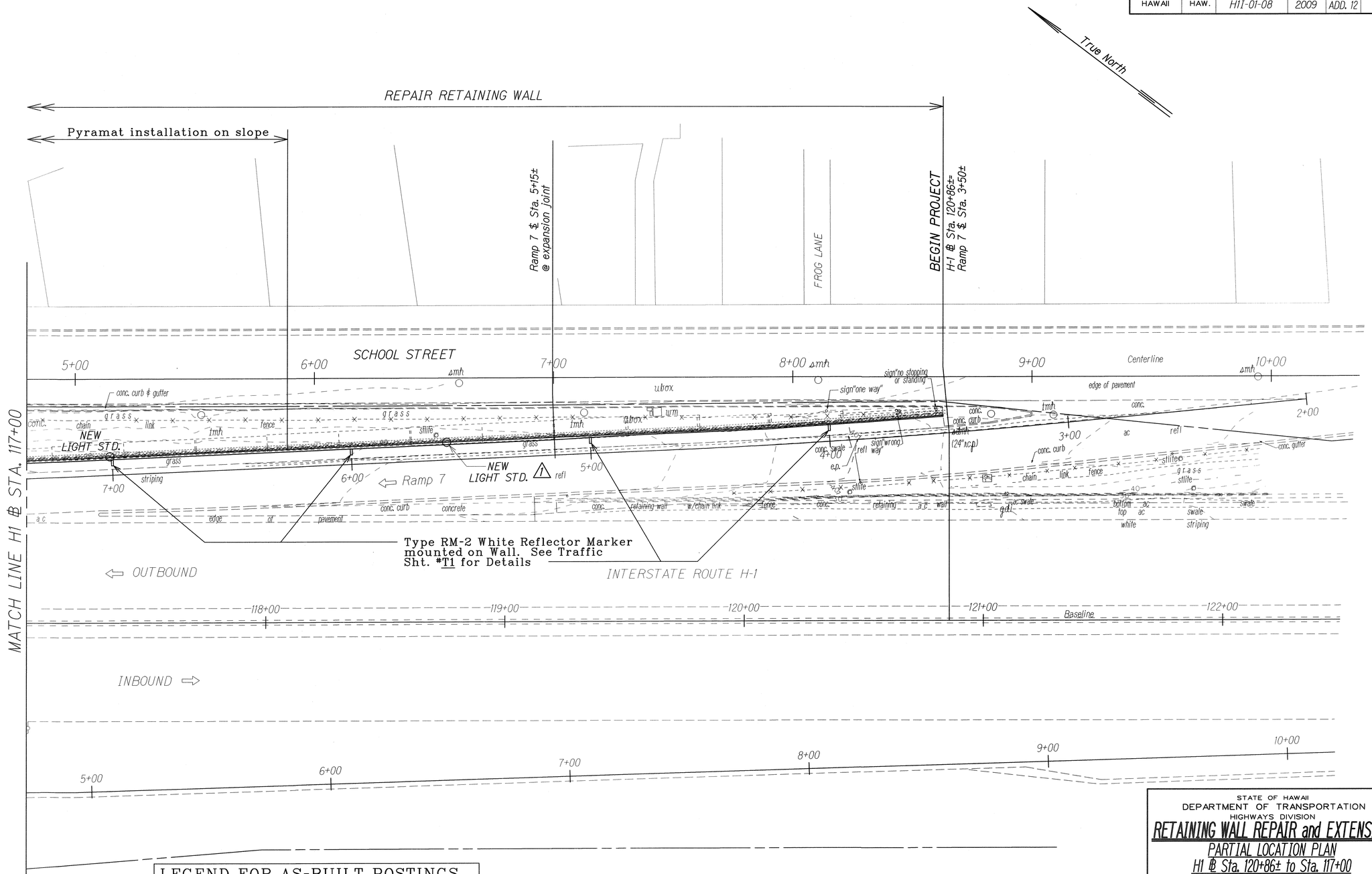

ORIGINAL PLAN	SURVEY PLOTTED BY XXX DATE XXX 2005
	DRAWN BY XXX
	TRACED BY XXX 2005
NOTE BOOK	DESIGNED BY XXX 2005
Tan1to4.dgn	QUANTITIES BY XXX 2005
N.	CHECKED BY XXX 2005

LEGEND FOR AS-BUILT POSTINGS

~~	Squiggly line for as-built deletion
~~100.00~~	Double line for as-built deletion
Roadway	Text for as-built posting

PARTIAL LOCATION PLAN

Scale: 1"=20'-0"

DATE	REVISION
3/31/09	Added New Light Standard and Callout

STATE OF HAWAII
DEPARTMENT OF TRANSPORTATION
HIGHWAYS DIVISION

RETAINING WALL REPAIR and EXTENSION

PARTIAL LOCATION PLAN
H1 ⊕ Sta. 120+86± to Sta. 117+00
INTERSTATE ROUTE H-1
EXTENSION AND REPAIR OF
SCHOOL STREET ON-RAMP RETAINING WALL
Project No. H11-01-08

Scale: As Noted — Date: Feb., 2009

SHEET No. Q4 OF 34 SHEETS

"AS-BUILT"

ADD. 12

FED. ROAD DIST. NO.	STATE	PROJ. NO.	FISCAL YEAR	SHEET NO.	TOTAL SHEETS
HAWAII	HAW.	H11-01-08	2009	ADD. 13	73

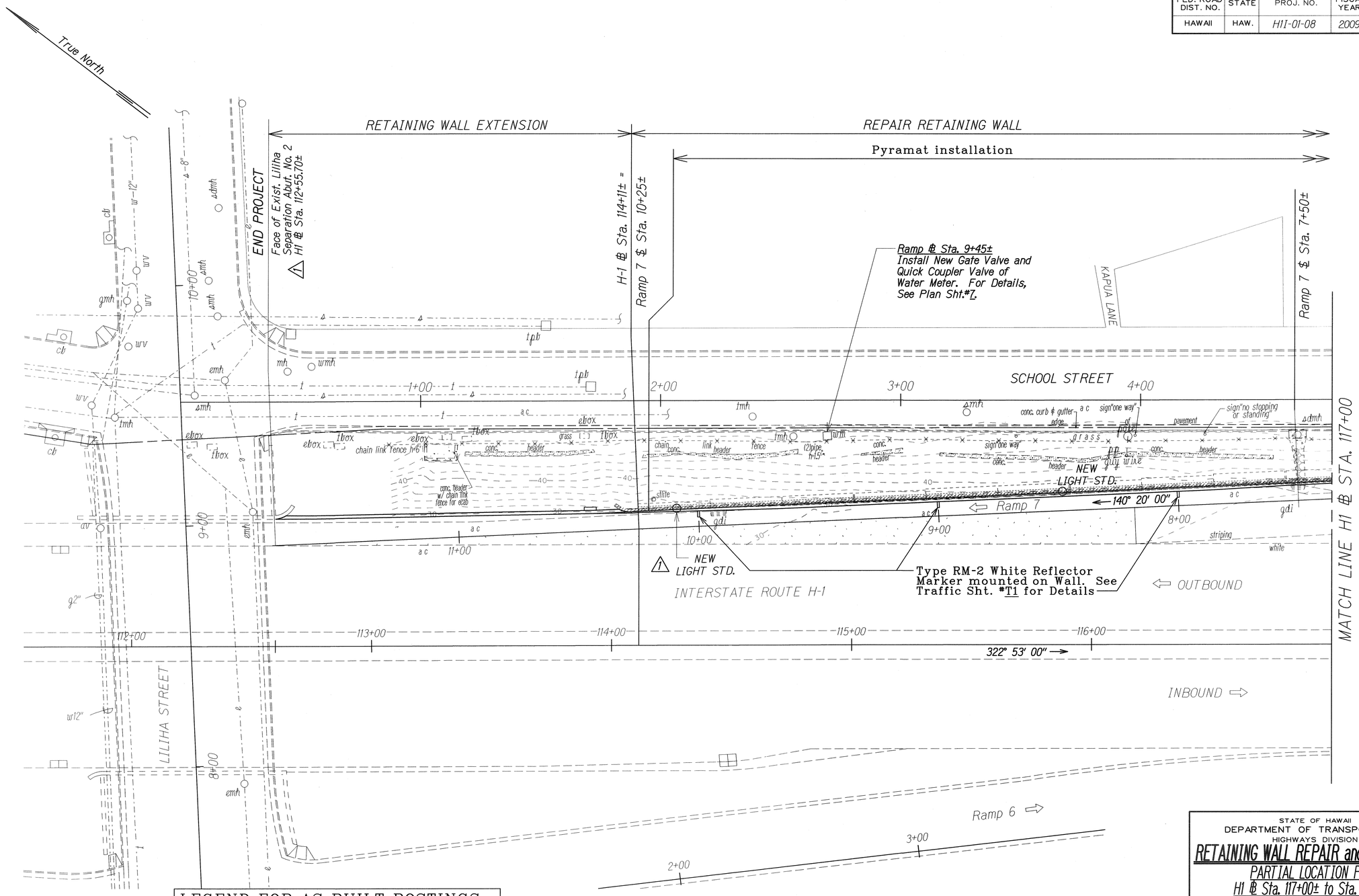

LEGEND FOR AS-BUILT POSTINGS

∧∧∧∧	Squiggly line for as-built deletion
~~100.00~~	Double line for as-built deletion
Roadway	Text for as-built posting

PARTIAL LOCATION PLAN

Scale: 1"=20'-0"

DATE	REVISION
3/31/09	Revised End Project Station Number, Added New Light Standard and Callout

STATE OF HAWAII
DEPARTMENT OF TRANSPORTATION
HIGHWAYS DIVISION

RETAINING WALL REPAIR and EXTENSION

PARTIAL LOCATION PLAN
H1 ℄ Sta. 117+00± to Sta. 113+40±
INTERSTATE ROUTE H-1
EXTENSION AND REPAIR OF
SCHOOL STREET ON-RAMP RETAINING WALL
Project No. H11-01-08

Scale: As Noted — Date: Feb., 2009

SHEET No. Q5 OF 34 SHEETS

ORIGINAL PLAN		
SURVEY PLOTTED BY	XXX	DATE XXX 2009
DRAWN BY		
TRACED BY	XXX	XXX 2009
DESIGNED BY	XXX	XXX 2009
QUANTITIES BY	XXX	XXX 2009
CHECKED BY	XXX	XXX 2009
NOTE BOOK No.		
lanlha5.dgn		

"AS-BUILT"

ADD. 13

FED. ROAD DIST. NO.	STATE	PROJ. NO.	FISCAL YEAR	SHEET NO.	TOTAL SHEETS
HAWAII	HAW.	H11-01-08	2009	ADD. 14	73

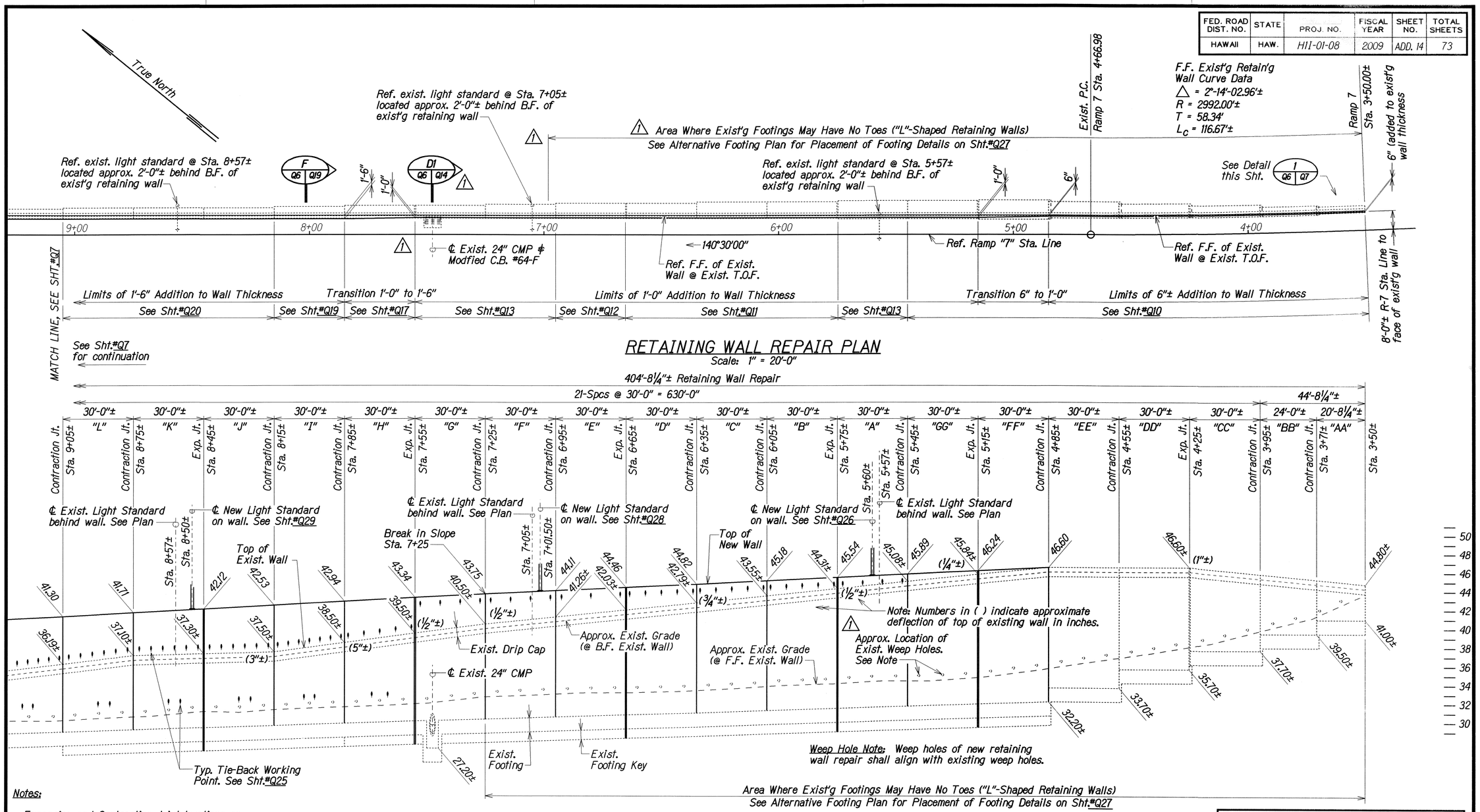

RETAINING WALL REPAIR PLAN

Scale: 1" = 20'-0"

RETAINING WALL REPAIR ELEVATION

Scale: Horizontal 1" = 20'-0" Vertical 1' = 5'-0"

Notes:

Expansion and Contraction Joint locations on the Existing Retaining Walls shall be maintained in the repair of the walls. See Sht.#Q7 for details.

See Standard Plan B-01 for Retaining Wall Extension joint details.

LEGEND

- Permanent Tie-Back Anchor
- Existing Weep Holes

EXTENSION and REPAIR of SCHOOL STREET ON-RAMP RETAINING WALL

ORIGINAL PLAN	SURVEY PLOTTED BY	XXX	DATE XXX 2009
	DRAWN BY	XXX	XXX 2009
	TRACED BY	XXX	XXX 2009
NOTE BOOK	DESIGNED BY	XXX	XXX 2009
	QUANTITIES BY	XXX	XXX 2009
N. Ishihara.dgn	CHECKED BY	XXX	XXX 2009

DATE	REVISION
3/31/09	Revised Modified Catchbasin, Section Sheet Number & Callouts, Added Legend and Complete Dimension Line.

STATE OF HAWAII
DEPARTMENT OF TRANSPORTATION
HIGHWAYS DIVISION

RETAINING WALL REPAIR

PARTIAL PLAN and ELEVATION

INTERSTATE ROUTE H-1, EXTENSION and REPAIR of SCHOOL STREET ON-RAMP RETAINING WALL
Project No. H11-01-08

Scale: As Noted Date: Feb, 2009

SHEET No. Q6 OF 34 SHEETS

ADD. 14

FED. ROAD DIST. NO.	STATE	PROJ. NO.	FISCAL YEAR	SHEET NO.	TOTAL SHEETS
HAWAII	HAW.	H11-01-08	2009	ADD. 15	73

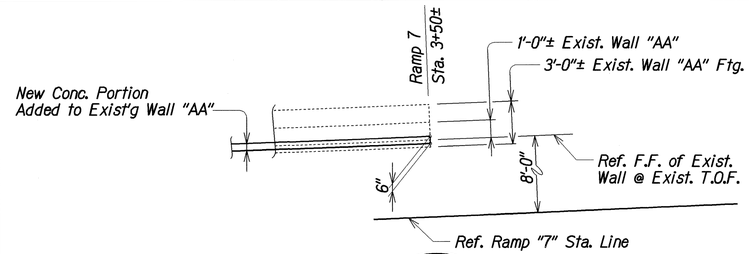

DETAIL 1 (Q6 | Q7)
Not to Scale

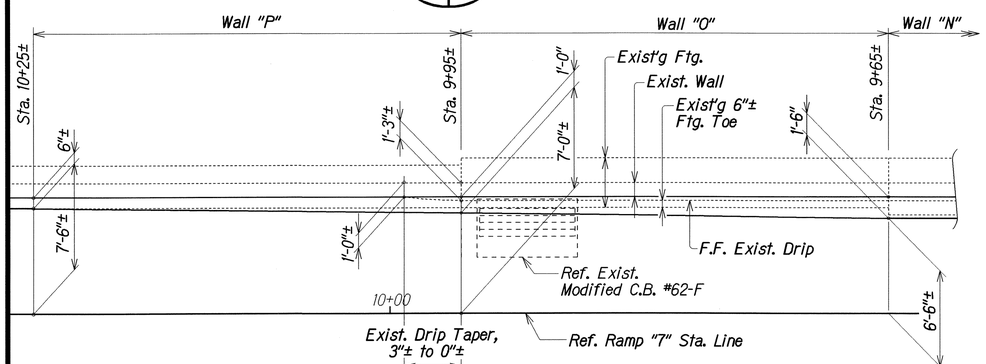

DETAIL 2 (Q7 | Q7)
Not to Scale

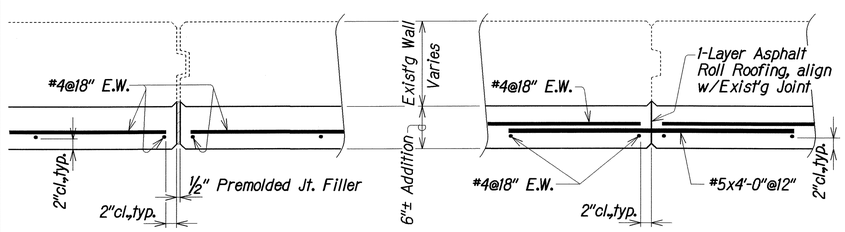

AT EXPANSION JOINT — AT CONTRACTION JOINT

JOINT DETAILS FOR WALL "AA" TO WALL "FF"
Not to Scale

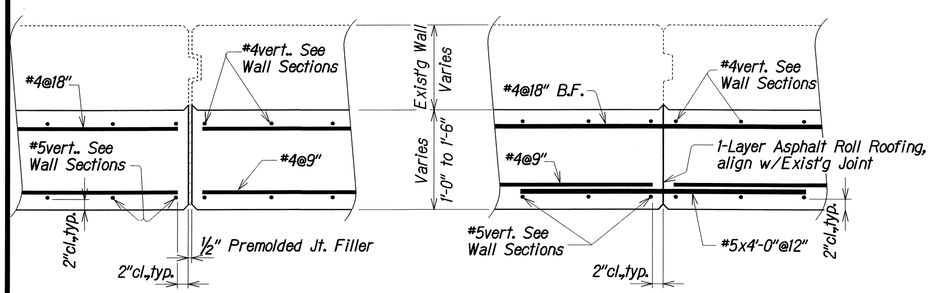

AT EXPANSION JOINT — AT CONTRACTION JOINT

JOINT DETAILS FOR WALL "A" TO WALL "P"
Not to Scale

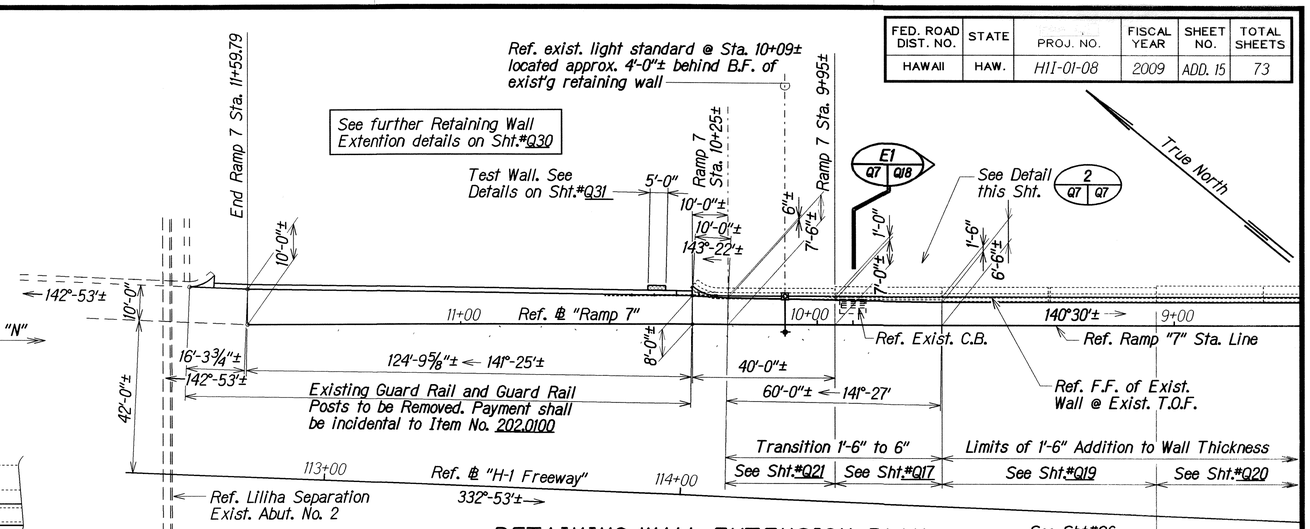

RETAINING WALL EXTENSION PLAN
Scale: 1" = 20'-0"

Note: Expansion and Contraction Joint locations on the existing walls shall be maintained in the repair of the walls. See this sheet for details. See Standard Plan B-01 for Joint details for Retaining Wall Extension.

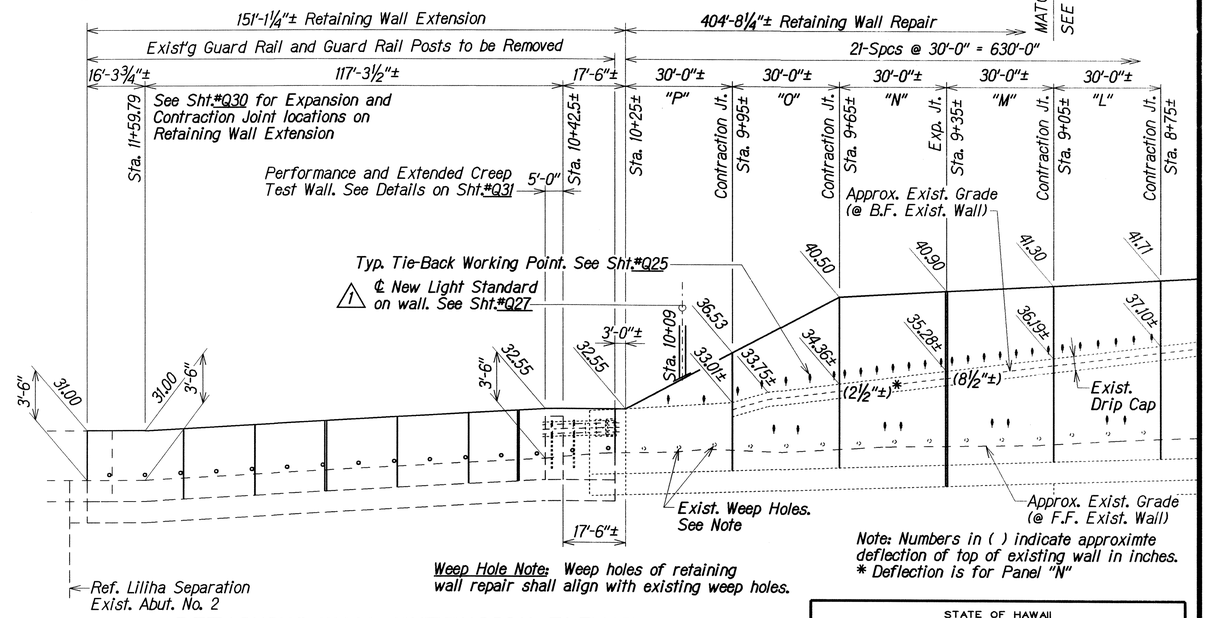

Weep Hole Note: Weep holes of retaining wall repair shall align with existing weep holes.

Note: Numbers in ( ) indicate approximte deflection of top of existing wall in inches.
* Deflection is for Panel "N"

RETAINING WALL EXTENSION ELEVATION
Scale: Horizontal 1" = 20'-0" Vertical 1" = 5'-0"

EXTENSION and REPAIR of SCHOOL STREET ON-RAMP RETAINING WALL

1 LEGEND
- Indicates Permanent Tie-back Anchor
- Indicates Existing Weep Hole
- Indicates New Weep Hole

DATE	DESCRIPTION
1 3/31/09	Added Legend for Permanent Tie-Back Anchor & Exist. Weep Hole and Revised New Light Standard Callout

STATE OF HAWAII
DEPARTMENT OF TRANSPORTATION
HIGHWAYS DIVISION

RETAINING WALL REPAIR and EXTENSION

PARTIAL PLAN, ELEVATION and DETAILS

INTERSTATE ROUTE H-1, EXTENSION and REPAIR of SCHOOL STREET ON-RAMP RETAINING WALL
Project No. H11-01-08

Scale: As Noted — Date: Feb, 2009

SHEET No. Q7 OF 34 SHEETS

ORIGINAL PLAN			
	SURVEY PLOTTED BY	XXX	DATE XXX 2002
	DRAWN BY	XXX	DATE XXX 2002
	TRACED BY	XXX	DATE XXX 2002
NOTE BOOK	DESIGNED BY	XXX	DATE XXX 2002
	QUANTITIES BY	XXX	DATE XXX 2002
	CHECKED BY	XXX	DATE XXX 2002

No. tdhhq1.dgn

ADD. 15

FED. ROAD DIST. NO.	STATE	PROJ. NO.	FISCAL YEAR	SHEET NO.	TOTAL SHEETS
HAWAII	HAW.	H11-01-08	2009	16	73

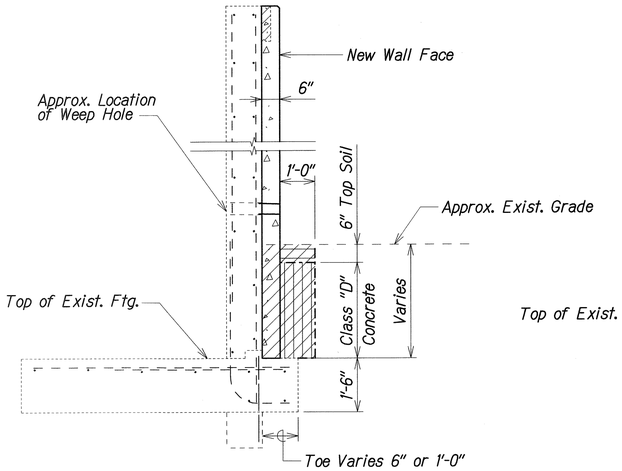

WALLS AA to EE
Scale: 1/2"=1'-0"

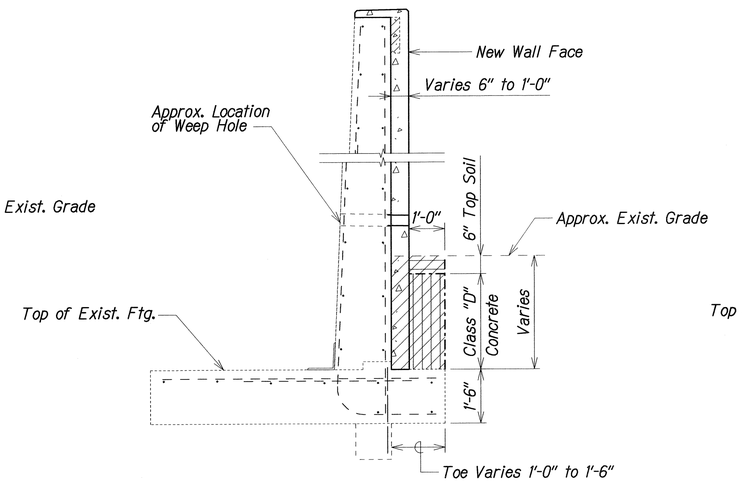

WALLS FF & GG
Scale: 1/2"=1'-0"

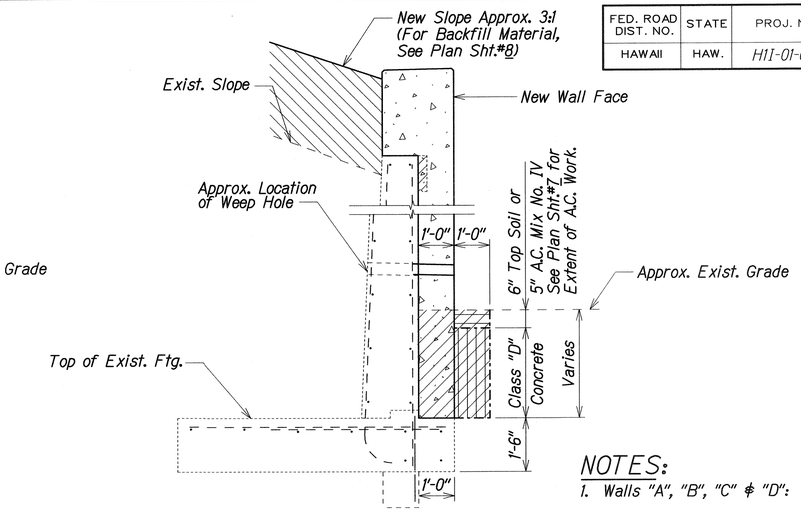

WALLS A to G
Scale: 1/2"=1'-0"

NOTES:

1. Walls "A", "B", "C" & "D": 6" Top Soil.
2. Wall "E": Transition Top Soil (Sta. 6+65) to 6" Top Soil (Sta. 6+85), Balance A.C.
3. Walls "F" & "G": A.C.
4. Backfill Slope for Wall "P", Backfill Slope shall vary from Approximately 3:1 to Existing Slope (Approximately 1 1/2:1)

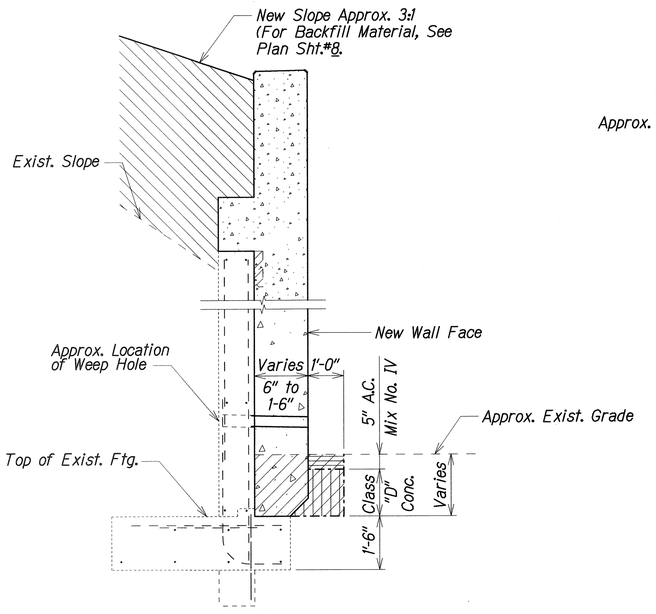

WALLS H to P
Scale: 1/2"=1'-0"

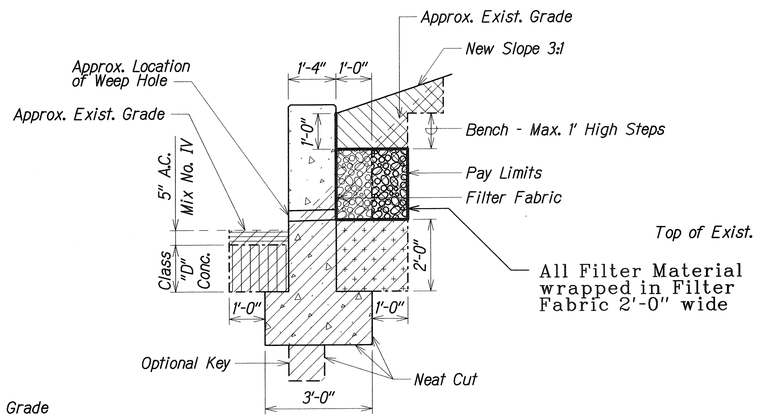

NEW WALL
(STA. 10+35± TO STA. 11+69.09±)
Scale: 1/2"=1'-0"

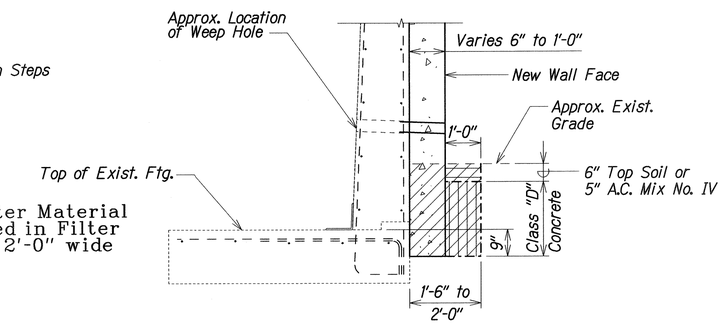

FOR FOOTING WITHOUT TOES
Scale: 1/2"=1'-0"

STRUCTURE EXCAVATION & BACK FILL PAY LIMITS

Scale: 1/2"=1'-0"

LEGEND

- Limits of Excavation
- Limits of Backfill
- Impervious Material
- Filter Material
- Limits of Backfill (In Back of Walls - 50/50 Mix of 2" Gravel and Topsoil)
- Class "D" Concrete
- 6" Top Soil (Front of Wall)
- 5" A.C. Mix No. IV

LEGEND FOR AS-BUILT POSTINGS

~~	Squiggly line for as-built deletion
~~100.00~~	Double line for as-built deletion
Roadway	Text for as-built posting

ORIGINAL PLAN			
SURVEY PLOTTED BY	XXX		DATE
DRAWN BY			XXX 2009
TRACED BY	XXX		XXX 2009
DESIGNED BY	XXX		XXX 2009
QUANTITIES BY	XXX		XXX 2009
CHECKED BY	XXX		XXX 2009
NOTE BOOK			
No.			

STATE OF HAWAII
DEPARTMENT OF TRANSPORTATION
HIGHWAYS DIVISION

RETAINING WALL REPAIR and EXTENSION
STRUCTURE EXCAVATION PAY LIMITS
INTERSTATE ROUTE H-1
EXTENSION AND REPAIR OF
SCHOOL STREET ON-RAMP RETAINING WALL
Project No. H11-01-08

Scale: As Noted
Date: Feb., 2009

SHEET No. Q8 OF 34 SHEETS

"AS-BUILT"

FED. ROAD DIST. NO.	STATE	PROJ. NO.	FISCAL YEAR	SHEET NO.	TOTAL SHEETS
HAWAII	HAW.	H11-01-08	2009	ADD. 17	73

WALL SCHEDULE

PANEL	STATION	NO. OF ANCHOR **** UPPER	NO. OF ANCHOR **** LOWER	∠ OF ANCHORS FROM HORIZ. ***	APPROX. O/S FROM SCHOOL ST. CURB TO FACE OF EXISTING RETAINING WALLS	TOP OF OLD WALL ELEV.	TOP OF NEW WALL ELEV.	DIFF. IN HEIGHT	ELEV. TOP OF EXIST. FTG.
	5+15				12.27'	45.84'	46.24'	0.40'	31.97'
"GG"	STA. 5+15 to STA. 5+45	-	-	-					
	5+45				13.56'	45.08'	45.89'	0.81'	31.73'
"A"	STA. 5+45 to STA. 5+75	4	-	60°			1	1	
	5+75				14.83'	44.31'	45.54'	1.23'	31.50'
"B"	STA. 5+75 to STA. 6+05	5	-	60°					
	6+05				16.11'	43.55'	45.18'	1.63'	31.27'
"C"	STA. 6+05 to STA. 6+35	5	-	60°					
	6+35				17.39'	42.79'	44.82'	2.03'	31.03'
"D"	STA. 6+35 to STA. 6+65	5	-	60°					
	6+65				18.67'	42.03'	44.46'	2.43'	30.80'
"E"	STA. 6+65 to STA. 6+95	3	-	45°					
	6+95				19.94'	41.26'	44.11'	2.85'	30.57'
"F"	STA. 6+95 to STA. 7+25	4	-	45°					
	7+25				21.22'	40.50'	43.75'	3.25'	30.33'
"G"	STA. 7+25 to STA. 7+55	4	-	45°					
	7+55				22.50'	39.50'	43.34'	3.84'	30.10'
"H"	STA. 7+55 to STA. 7+85	5	2	30°					
	7+85				23.78'	38.50'	42.94'	4.44'	29.87'
"I"	STA. 7+85 to STA. 8+15	7	2	30°					
	8+15				24.06'	37.50'	42.53'	5.03'	29.63'
"J"	STA. 8+15 to STA. 8+45	6	2	20°					
	8+45				25.34'	37.30'	42.12'	4.82'	29.40
"K"	STA. 8+45 to STA. 8+75	6	2	20°					
	8+75				26.62'	37.10'	41.71'	4.61'	29.17'
"L"	STA. 8+75 to STA. 9+05	6	2	20°					
	9+05				27.90'	36.19'	41.30'	5.11'	28.93'
"M"	STA. 9+05 to STA. 9+35	7	2	20°				1	
	9+35				29.18'	35.28'	40.90'	5.62'	28.70'
"N"	STA. 9+35 to STA. 9+65	7	2	20°					
	9+65				30.46'	34.36'	40.50'	6.14'	28.47'
"O"	STA. 9+65 to STA. 9+95	5	2	20°					
	9+95				31.74'	33.01'	36.53'	3.52'	28.23'
"P"	STA. 9+95 to STA. 10+25	2	-	20°					
	10+25				33.02'	32.55'	32.55'	-	28.00'

NOTE:
Elevations shown are +/-.

NOTE:
① One (1) Tieback Anchor added on Wall "F" between Anchors No. 1 and No. 2, Standard depth. See Sht. *Q13.

② One (1) Tieback Anchor added on Wall "G" between Anchors No. 3 and No. 4, Standard depth. See Sht. *Q13.

③ Tieback Anchor No. 5 length extended to 37'-0". See Sht. *Q20.

LEGEND

(39.75) Indicates Proof Test Anchors

[33.00'] Lower Anchors ½ Proof Test Loaded in conjunction with Proof Test.

* For Walls "A" through "G" Anchor Elevation Location, See Tieback Anchor Placement Detail on Sht.#Q25.

** For Walls "H" through "P" Anchor Elevation Location, See Tieback Anchor Placement Detail on Sht.#Q25.

*** ∠ of All Lower Anchors from Horizontal Shall Be 20°.

**** For Location & Dimension of Anchors on Walls, See Sht.#Q6 & Q7 which refers to the sht. where the details are drawn.

℄ ELEVATION LOCATION OF TIE-BACK AT BEARING PLATE (W.P.)*

PANEL	ANCHOR NO. 1	NO. 2	NO.3	NO. 4	NO. 5
"A"	44.89'	44.99'	(45.09')	45.19'	
"B"	44.54'	44.61'	(44.69')	44.76'	44.83'
"C"	44.18'	44.25'	(44.33')	44.40'	44.48'
"D"	43.82'	43.90'	(43.97')	44.04'	44.12'
"E"	43.47'	(43.62')	43.76'		
See Note ①					
"F"	43.11'	43.21'	(43.31')	43.42'	
See Note ②					
"G"	42.70'	42.82'	(42.93')	43.05'	

℄ ELEVATION LOCATION OF TIE-BACK AT WORKING POINT (W.P.)**

PANEL		ANCHOR NO. 1	NO. 2	NO. 3	NO. 4	NO. 5	NO. 6	NO. 7
"H"	UPPER	39.30'	39.53'	(39.75')	39.98'	40.20'		
	LOWER	[33.00']	[33.00']					
"I"	UPPER	38.32'	38.46'	38.61'	(38.75')	38.89'	39.04'	39.18'
	LOWER	[32.75']	[32.75']					
				See Note ③				
"J"	UPPER	38.07'	38.10'	38.13'	(38.17')	38.20'	38.23'	
	LOWER	[32.50']	[32.50']					
"K"	UPPER	37.87'	37.90'	37.93'	(37.97')	38.00'	38.03'	
	LOWER	[32.25']	[32.25']					
"L"	UPPER	37.02'	37.17'	37.32'	(37.47')	37.62'	37.77'	
	LOWER	[32.00']	[32.00']					
"M"	UPPER	36.08'	36.22'	36.35'	(36.49')	36.63'	36.76'	36.89'
	LOWER	[31.75']	[31.75']					
"N"	UPPER	35.16'	35.29'	35.43'	(35.57')	35.71'	35.85'	35.98'
	LOWER	[31.50']	[31.50']					
"O"	UPPER	33.91'	34.39'	(34.65')	34.85'	35.05'		
	LOWER	[31.25']	[31.25']					
"P"	UPPER	33.30'	33.30'					

LEGEND FOR AS-BUILT POSTINGS

~~	Squiggly line for as-built deletion
~~100.00~~	Double line for as-built deletion
Roadway	Text for as-built posting

DATE	REVISION
1 3/31/09	Revised Top of New Wall Elevation and Difference in Height

STATE OF HAWAII
DEPARTMENT OF TRANSPORTATION
HIGHWAYS DIVISION

RETAINING WALL REPAIR
WALL, ANCHOR AND BEARING PLATE SCHEDULES
INTERSTATE ROUTE H-1, EXTENSION AND REPAIR OF SCHOOL STREET ON-RAMP RETAINING WALL
Project No. H11-01-08

Scale: As Noted — Date: Feb., 2009

SHEET No. Q9 OF 34 SHEETS

ORIGINAL PLAN		SURVEY PLOTTED BY	XXX	DATE	XXX 2009
		DRAWN BY			
		TRACED BY	XXX		XXX 2009
		DESIGNED BY	XXX		XXX 2009
NOTE BOOK		QUANTITIES BY	XXX		XXX 2009
No.		CHECKED BY	XXX		XXX 2009

"AS-BUILT"

ADD. 17

FED. ROAD DIST. NO.	STATE	FED. AID PROJ. NO.	FISCAL YEAR	SHEET NO.	TOTAL SHEETS
HAWAII	HAW.	HII-01-08	2009	18	73

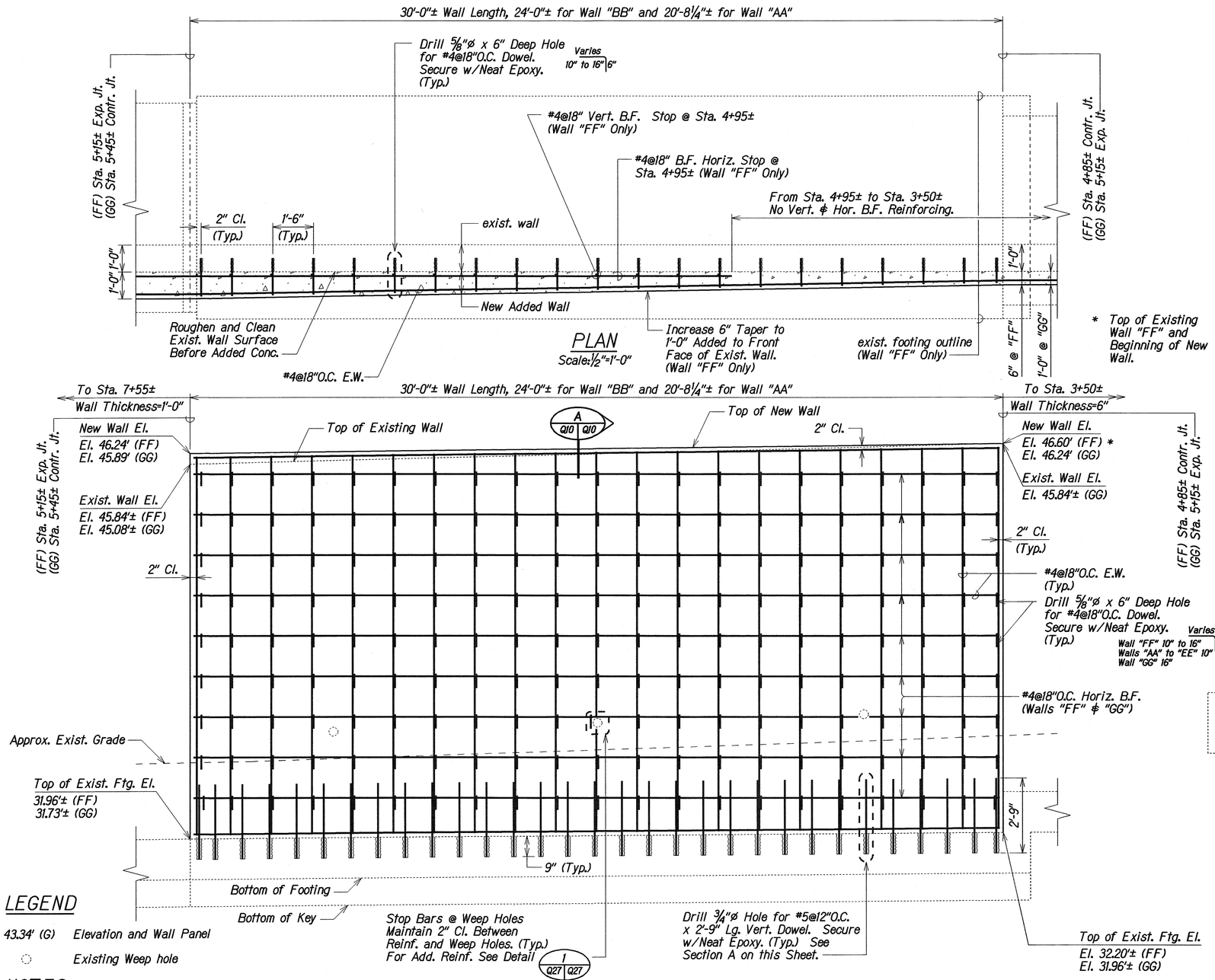

ELEVATION
Scale: ½"=1'-0"

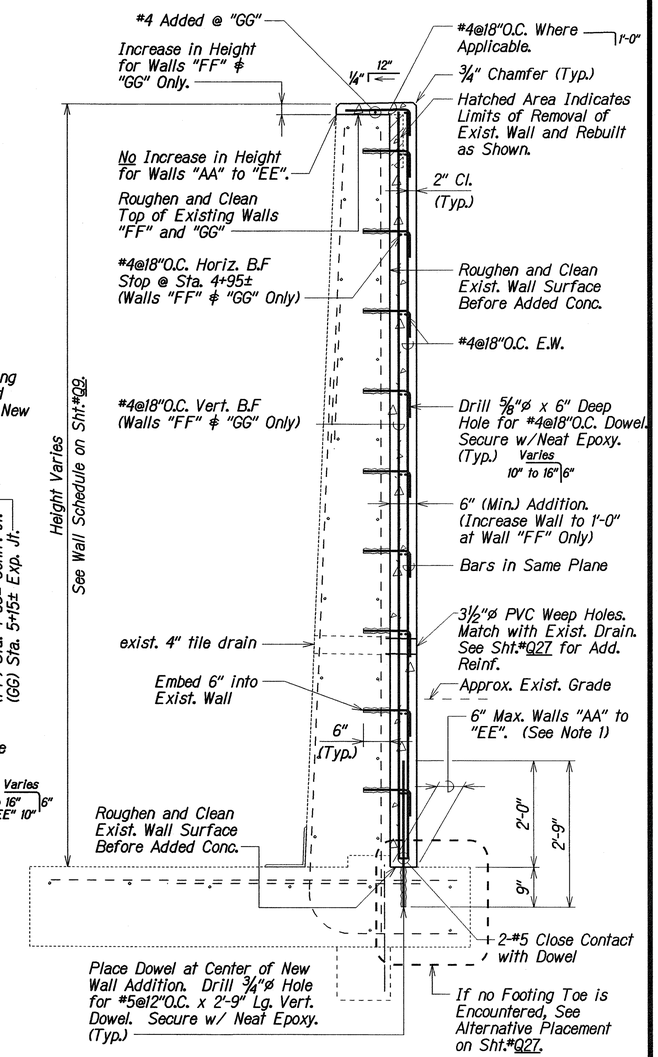

Section A Q10 Q10
Scale: ¾"=1'-0"

LEGEND

43.34' (G) Elevation and Wall Panel

Existing Weep hole

NOTES:

1. For All Walls "AA" to "EE" 6" Max. Added Wall Thickness Shall be in the Same Horizontal Plane.
2. Top of Wall for Walls "AA" to "EE" shall match Existing Top of Walls.
3. For Expansion & Contraction Joint Details, See Sht.#Q7.
4. For Walls "AA" to "EE". See Sht.#Q6 for Top of Existing Wall and Top of Existing Footing Elevations.

WALL "FF" DETAILS

WALL "AA" TO "GG" SIMILAR EXCEPT AS NOTED

STATE OF HAWAII
DEPARTMENT OF TRANSPORTATION
HIGHWAYS DIVISION

RETAINING WALL REPAIR
WALL "AA" to "GG" DETAILS
INTERSTATE ROUTE H-1
EXTENSION AND REPAIR OF
SCHOOL STREET ON-RAMP RETAINING WALL
Project No. HII-01-08

Scale: As Noted — Date: Feb. 2009

SHEET No. Q10 OF 34 SHEETS

ORIGINAL PLAN	SURVEY PLOTTED BY XXX	DATE XXX 2002
	DRAWN BY XXX	
	TRACED BY XXX	XXX 2002
NOTE BOOK	DESIGNED BY XXX	XXX 2002
	QUANTITIES BY XXX	XXX 2002
No.	CHECKED BY XXX	XXX 2002

FED. ROAD DIST. NO.	STATE	PROJ. NO.	FISCAL YEAR	SHEET NO.	TOTAL SHEETS
HAWAII	HAW.	H11-01-08	2009	19	73

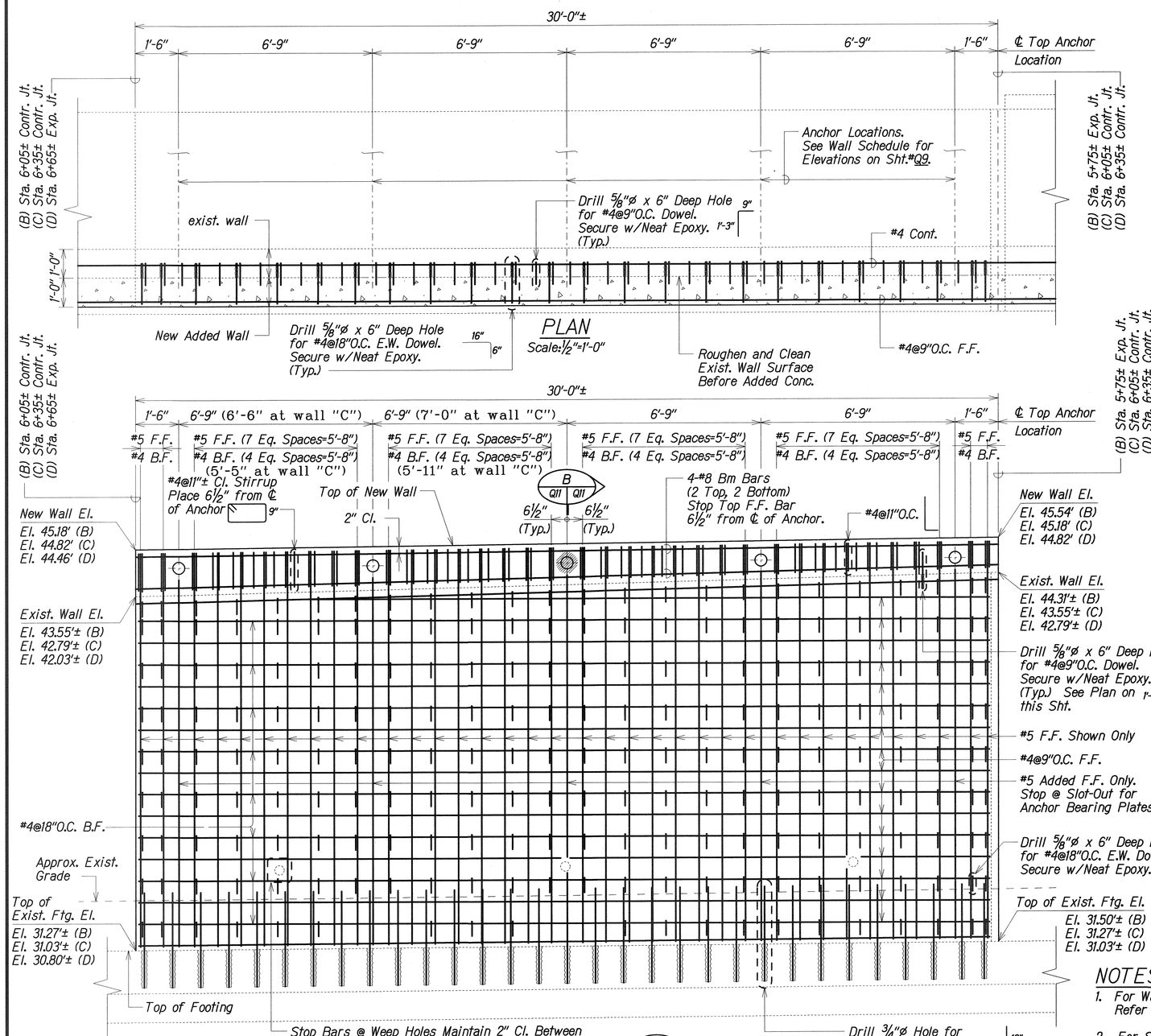

ELEVATION
Scale: 1/2"=1'-0"

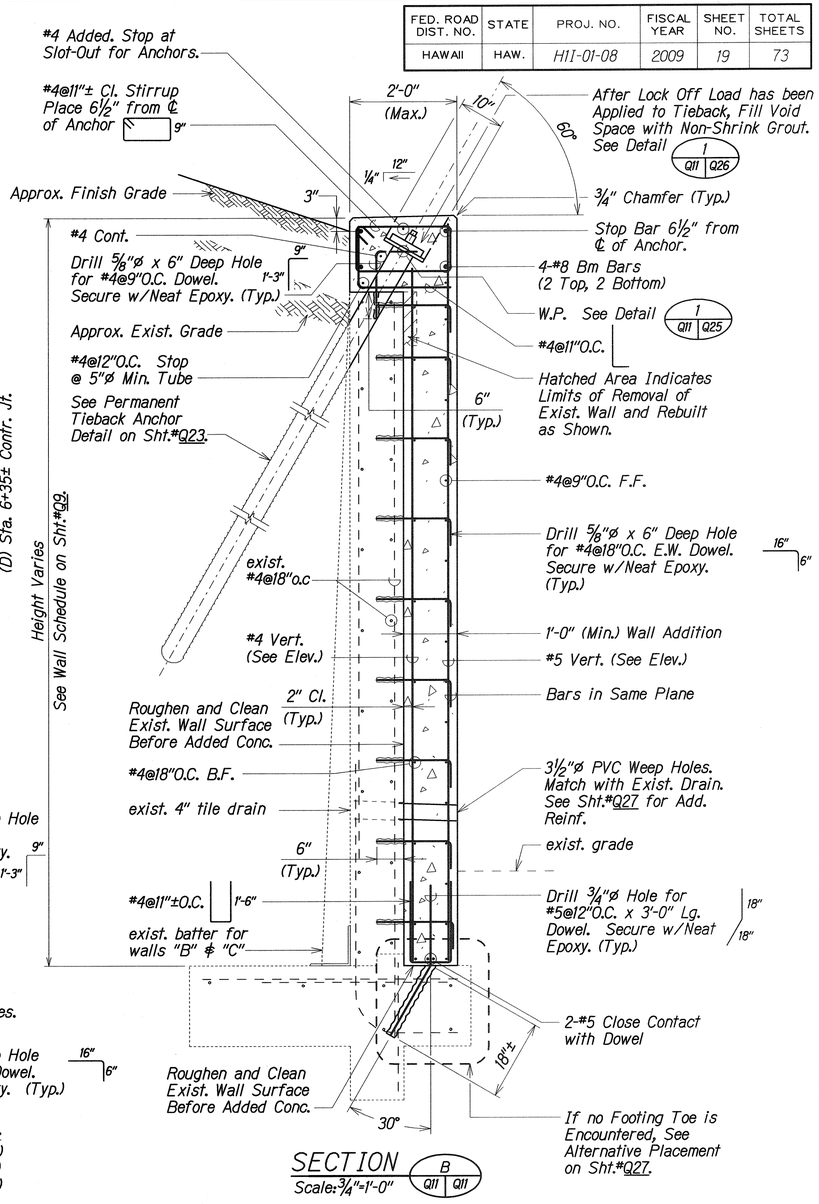

SECTION B Q11 Q11
Scale: 3/4"=1'-0"

NOTES:

1. For Walls "C" & "D" Wall Elevations. Refer to Wall Schedule on Sht.#Q9.
2. For Slot-Out Details, See Sht.#Q25 & Q26.
3. For Expansion & Contraction Joint Details, See Sht.#Q7.
4. For W.P. Elev. for Anchors, See Sht.#Q9 & Q25.

LEGEND

- Indicates Proof Test Anchor
- Permanent Tieback Anchor
- 43.34' (G) Elevation and Wall Panel
- Existing Weep hole

LEGEND FOR AS-BUILT POSTINGS

∿∿∿	Squiggly line for as-built deletion
~~100.00~~	Double line for as-built deletion
Roadway	Text for as-built posting

WALL "B" DETAILS

WALL "C" and "D" SIMILAR

STATE OF HAWAII
DEPARTMENT OF TRANSPORTATION
HIGHWAYS DIVISION

RETAINING WALL REPAIR

WALL "B", "C", and "D" DETAILS

INTERSTATE ROUTE H-1
EXTENSION AND REPAIR OF
SCHOOL STREET ON-RAMP RETAINING WALL
Project No. H11-01-08

Scale: As Noted — Date: Feb. 2009

SHEET No. Q11 OF 34 SHEETS

ORIGINAL PLAN	SURVEY PLOTTED BY	XXX	DATE XXX 2009
	DRAWN BY	XXX	XXX 2009
	TRACED BY	XXX	XXX 2009
NOTE BOOK	DESIGNED BY	XXX	XXX 2009
	QUANTITIES BY	XXX	XXX 2009
No.	CHECKED BY	XXX	XXX 2009

"AS-BUILT"

FED. ROAD DIST. NO.	STATE	FED. AID PROJ. NO.	FISCAL YEAR	SHEET NO.	TOTAL SHEETS
HAWAII	HAW.	HII-01-08	2009	20	73

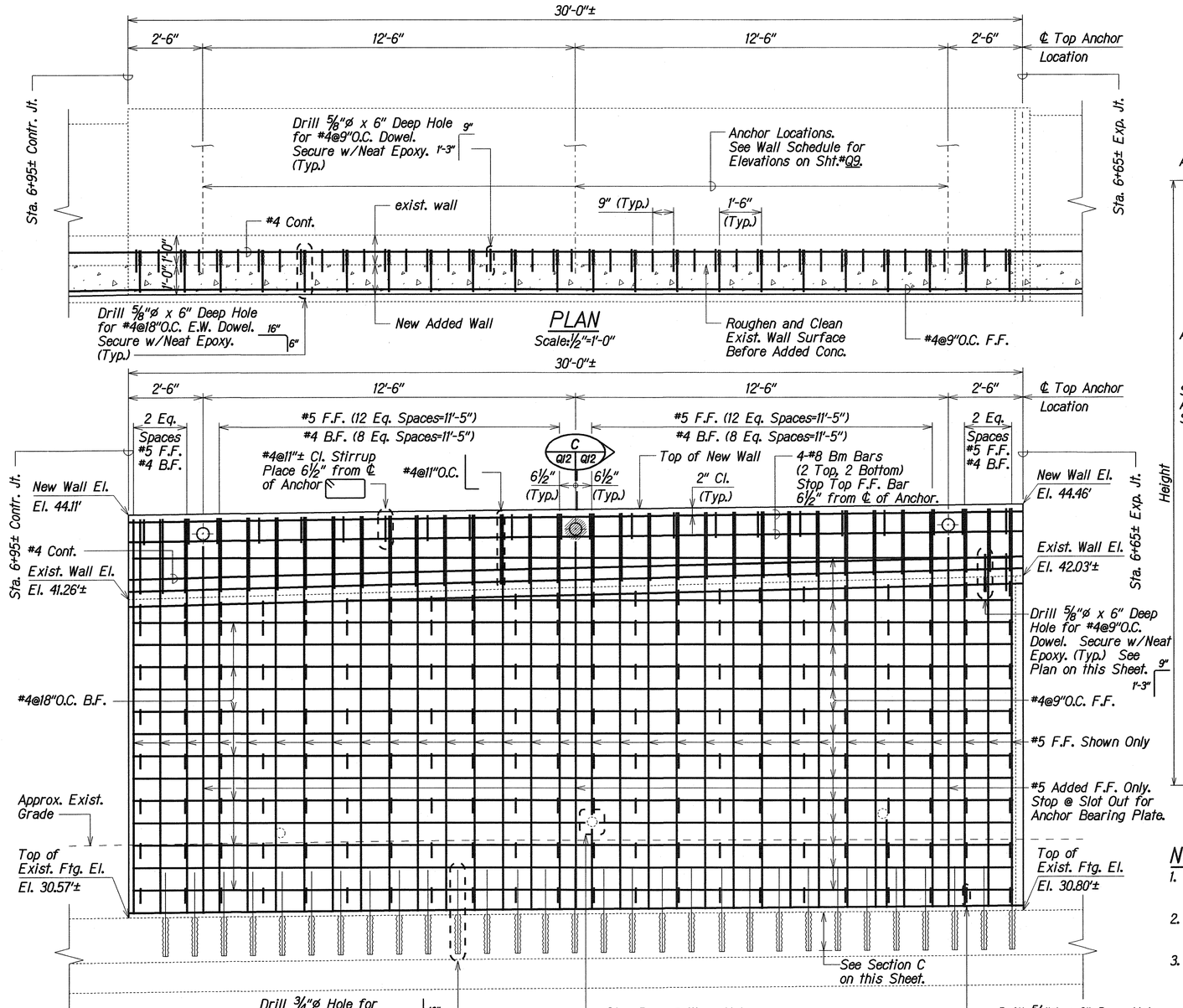

ELEVATION
Scale: 1/2"=1'-0"

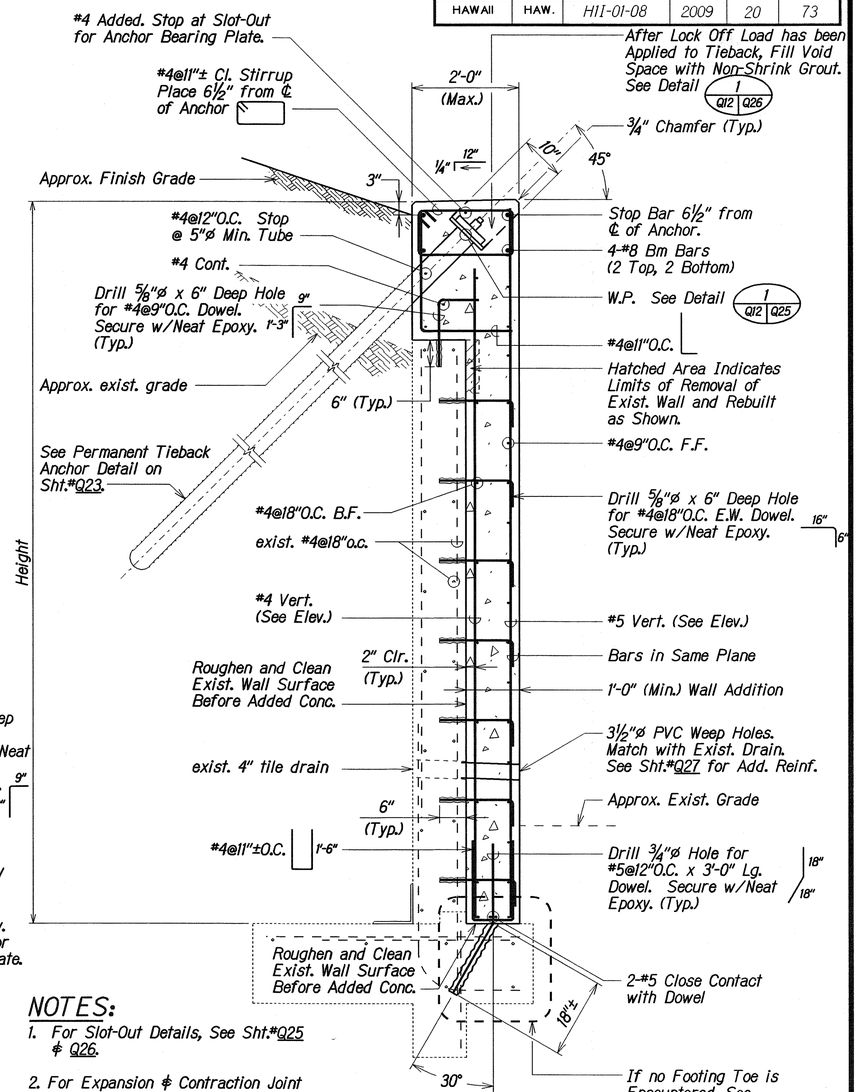

SECTION C Q12 Q12
Scale: 3/4"=1'-0"

NOTES:

1. For Slot-Out Details, See Sht.#Q25 & Q26.
2. For Expansion & Contraction Joint Details, See Sht.#Q7.
3. For W.P. Elevation for Anchor, See Sht.#Q9 & Q25.

LEGEND

- Indicates Proof Test Anchor
- Permanent Tieback Anchor
- 43.34' (G) Elevation and Wall Panel
- Existing Weep hole

ORIGINAL PLAN	SURVEY PLOTTED BY	XXX	DATE XXX 2009
	DRAWN BY		
NOTE BOOK	TRACED BY	XXX	XXX 2009
	DESIGNED BY	XXX	XXX 2009
	QUANTITIES BY	XXX	XXX 2009
N. Ishiko 12 Ogi	CHECKED BY		

STATE OF HAWAII
DEPARTMENT OF TRANSPORTATION
HIGHWAYS DIVISION

RETAINING WALL REPAIR
WALL "E" DETAILS
INTERSTATE ROUTE H-1
EXTENSION AND REPAIR OF
SCHOOL STREET ON-RAMP RETAINING WALL
Project No. HII-01-08

Scale: As Noted — Date: Feb. 2009

WALL "E" DETAILS

SHEET No. Q12 OF 34 SHEETS

FED. ROAD DIST. NO.	STATE	PROJ. NO.	FISCAL YEAR	SHEET NO.	TOTAL SHEETS
HAWAII	HAW.	H11-01-08	2009	ADD. 21	73

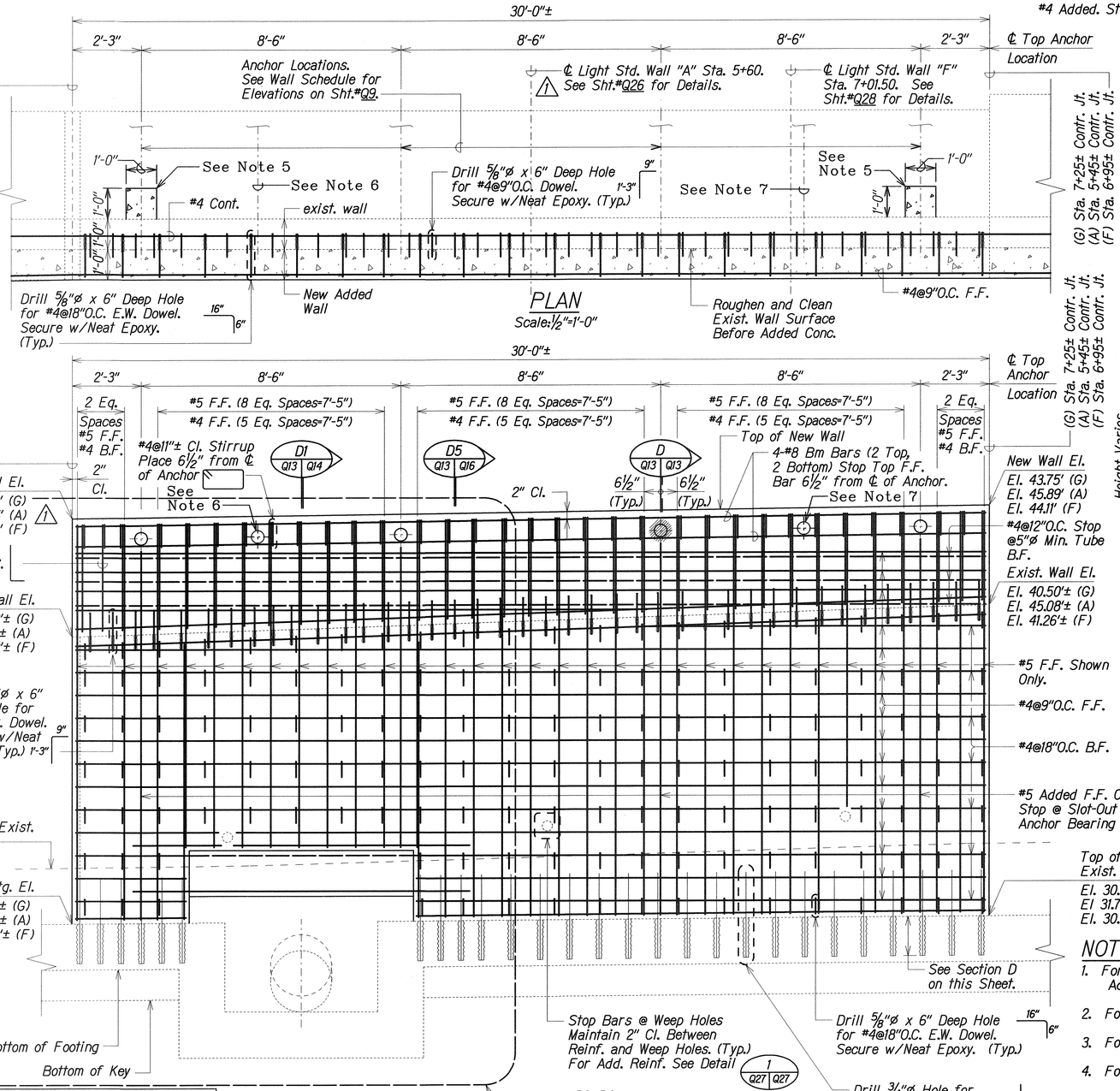

ELEVATION
Scale: 1/2"=1'-0"

WALL "G" DETAILS
WALL "A" and "F" SIMILAR

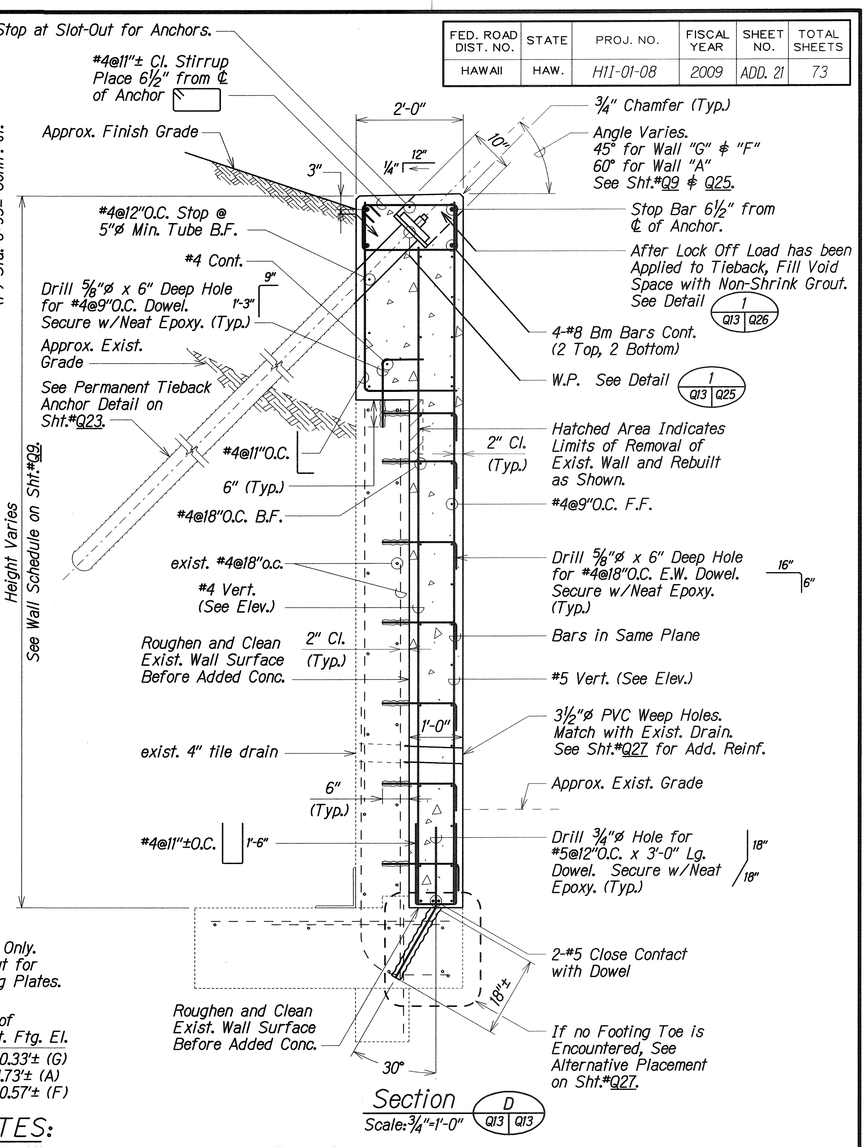

Section D Q13 Q13
Scale: 3/4"=1'-0"

NOTES:

1. For All Walls "A" to "G", Measured at Base 1'-0" Max. Added Wall Thickness Shall be in the Same Plane.
2. For Slot-Out Details, See Sht.#Q25 & Q26.
3. For Expansion and Contraction Joint Details, See Sht.#Q7.
4. For W.P. Elevation for Anchors, See Sht.#Q9 & Q25.
5. Modified Concrete Block at Tieback Anchors No. 1 & No. 4, (Wall "A" Only). See Sht. #Q13A.
6. Tieback Anchor added on Wall "F" Only, Standard depth. See Sht. #Q9.
7. Tieback Anchor added on Wall "G" Only, Standard depth. See Sht. #Q9.

LEGEND FOR AS-BUILT POSTINGS

~~	Squiggly line for as-built deletion
~~100.00~~	Double line for as-built deletion
Roadway	Text for as-built posting

LEGEND

	Indicates Proof Test Anchor
	Permanent Tieback Anchor
43.34' (G)	Elevation and Wall Panel
	Existing Weep hole

ORIGINAL PLAN		DATE
SURVEY PLOTTED BY	XXX	XXX 2002
DRAWN BY		
NOTE BOOK	TRACED BY	XXX 2002
	DESIGNED BY	XXX 2002
	QUANTITIES BY	XXX 2002
	CHECKED BY	XXX 2002

DATE	REVISION
3/31/09	Revised New Wall Elevation (A) and Added Light Std. Wall "A" Callout

STATE OF HAWAII
DEPARTMENT OF TRANSPORTATION
HIGHWAYS DIVISION

RETAINING WALL REPAIR

WALL "A", "F" and "G" DETAILS

INTERSTATE ROUTE H-1
EXTENSION AND REPAIR OF
SCHOOL STREET ON-RAMP RETAINING WALL
Project No. H11-01-08

Scale: As Noted — Date: Feb. 2009

SHEET No. Q13 OF 34 SHEETS

"AS-BUILT"

ADD. 21

FED. ROAD DIST. NO.	STATE	PROJ. NO.	FISCAL YEAR	SHEET NO.	TOTAL SHEETS
HAWAII	HAW.	HII-01-08	2009		73

C.O. ADD. 21 S-1

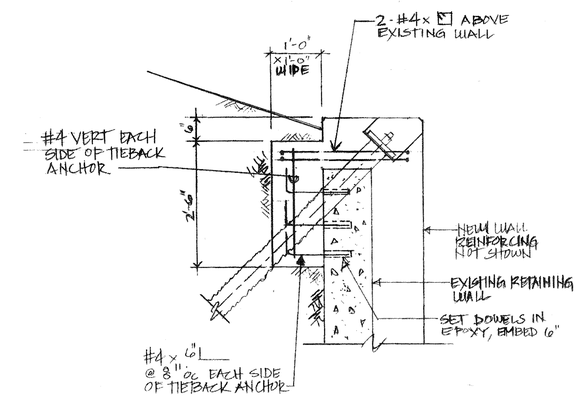

WALL PANEL "A"
ADDED CONCRETE BLOCK at
TIEBACK ANCHOR (2 LOCATIONS)

RETAINING WALL SHORING Scale: N.T.S.
INTERSTATE ROUTE H-1
EXTENSION and REPAIR of SCHOOL STREET
ON-RAMP RETAINING WALL
PROJECT No. HII-01-08

SEPTEMBER 15, 2009

MARVIN W. MESTANZA
LICENSED PROFESSIONAL ENGINEER
No. 9172-S
HAWAII, U.S.A.

Expires April 30, 2010

Marvin W. Mestanza

THIS WORK WAS PREPARED BY ME OR UNDER MY SUPERVISION

Note: This tracing prepared during "As-Built" posting.

LEGEND FOR AS-BUILT POSTINGS	
~~^^^^^~~	Squiggly line for as-built deletion
~~100.00~~	Double line for as-built deletion
Roadway	Text for as-built posting

STATE OF HAWAII
DEPARTMENT OF TRANSPORTATION
HIGHWAYS DIVISION

RETAINING WALL REPAIR
WALL "A" DETAIL
ADDED CONCRETE BLOCK AT TIEBACK ANCHOR
INTERSTATE ROUTE H-1
EXTENSION AND REPAIR OF
SCHOOL STREET ON-RAMP RETAINING WALL
Project No. HII-01-08

Scale: As Noted Date: Feb., 2009

SHEET No. Q13A OF 34 SHEETS

ORIGINAL PLAN	SURVEY PLOTTED BY	XXX	DATE XXX 2009
	DRAWN BY		
	TRACED BY	XXX	XXX 2009
NOTE BOOK	DESIGNED BY	XXX	XXX 2009
	QUANTITIES BY	XXX	XXX 2009
N. Jim Dig13.dgn	CHECKED BY	XXX	XXX 2009

"AS-BUILT"

C.O. ADD. 21 S-1

FED. ROAD DIST. NO.	STATE	PROJ. NO.	FISCAL YEAR	SHEET NO.	TOTAL SHEETS
HAWAII	HAW.	HII-01-08	2009	ADD. 22	73

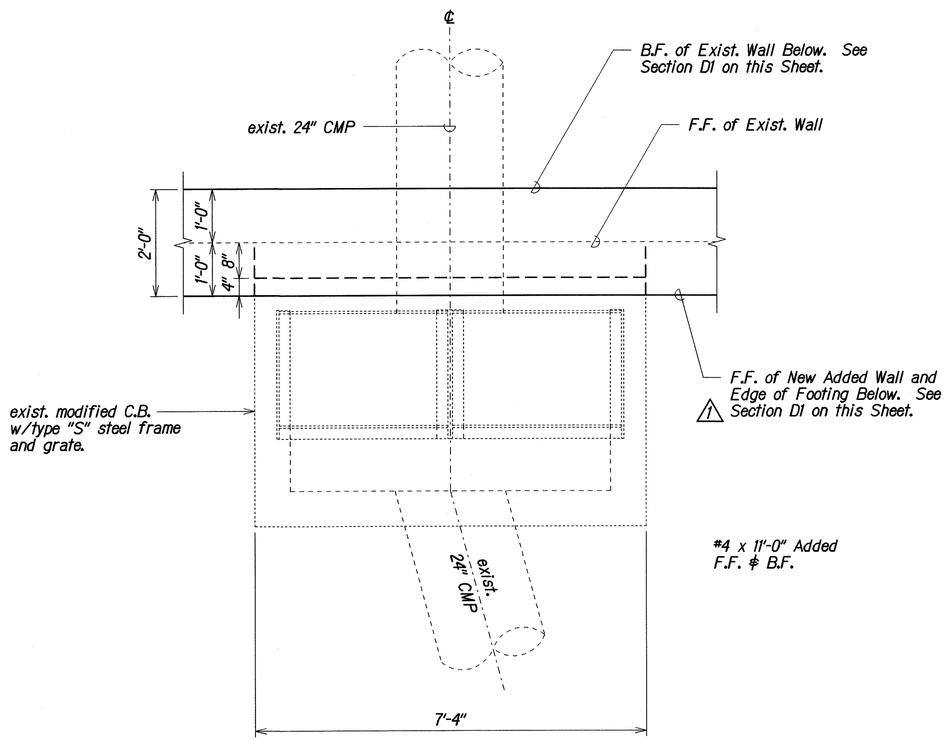

PLAN
Scale: 3/4"=1'-0"

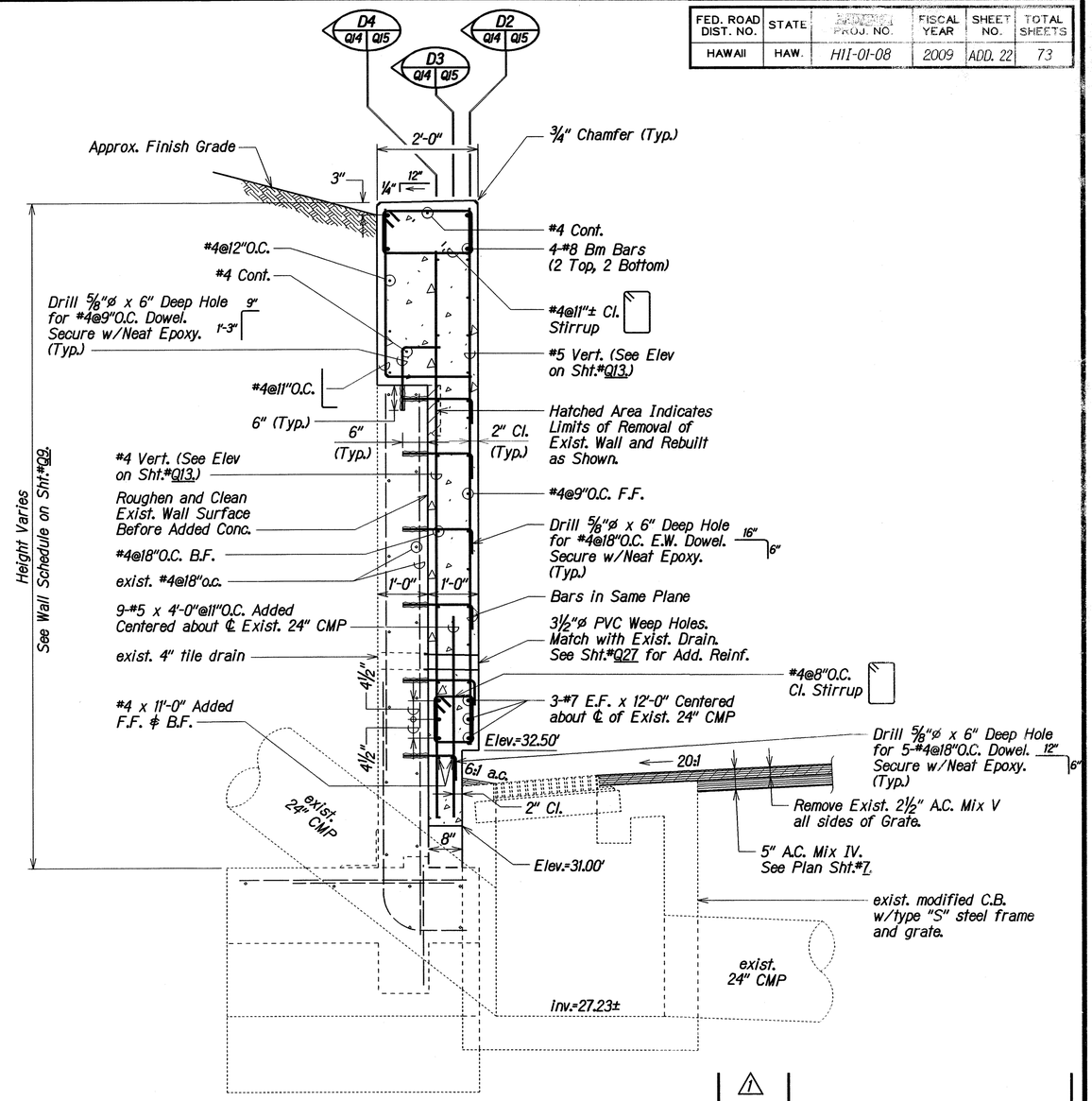

SECTION D1 Q13 Q14 Q6
Scale: 3/4"=1'-0"

DATE	REVISION
3/31/09	Revised Section Designation

STATE OF HAWAII
DEPARTMENT OF TRANSPORTATION
HIGHWAYS DIVISION

RETAINING WALL REPAIR
WALL "G" AT MODIFIED C.B. #64-F
PLAN AND SECTION
INTERSTATE ROUTE H1
EXTENSION AND REPAIR OF
SCHOOL STREET ON-RAMP RETAINING WALL
Project No. HII-01-08

Scale: As Noted Date: Feb. 2009

SHEET No. Q14 OF 34 SHEETS

ADD. 22

ORIGINAL PLAN	SURVEY PLOTTED BY XXX	DATE XXX 2009
	DRAWN BY XXX	
	TRACED BY XXX	XXX 2009
NOTE BOOK	DESIGNED BY XXX	XXX 2009
	QUANTITIES BY XXX	XXX 2009
N:\ghhp\d1.dgn	CHECKED BY XXX	XXX 2009

WALL "G" AT MODIFIED C.B.#64-F - RAMP 7 & STA. 7+47±

FED. ROAD DIST. NO.	STATE	FED. AID PROJ. NO.	FISCAL YEAR	SHEET NO.	TOTAL SHEETS
HAWAII	HAW.	HII-01-08	2009	23	73

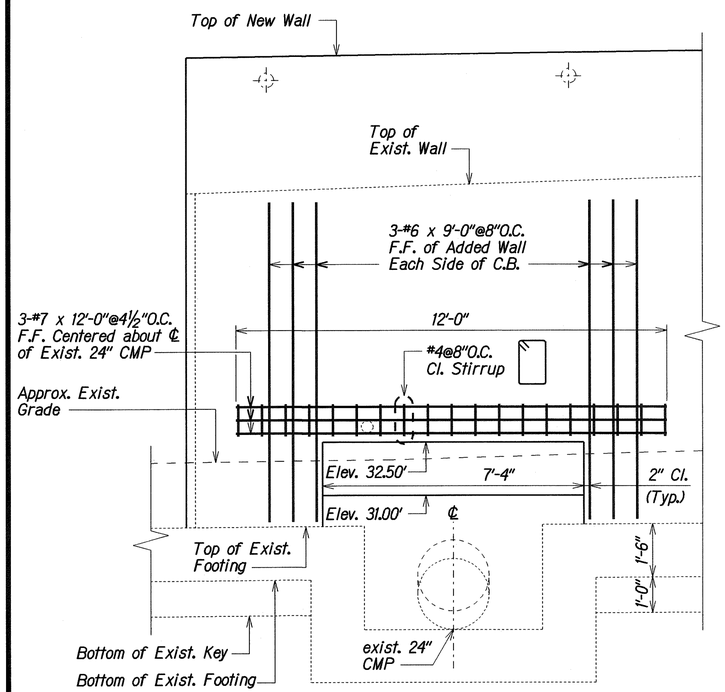

SECTION D2 (Q14 | Q15)
Scale: ½"=1'-0"

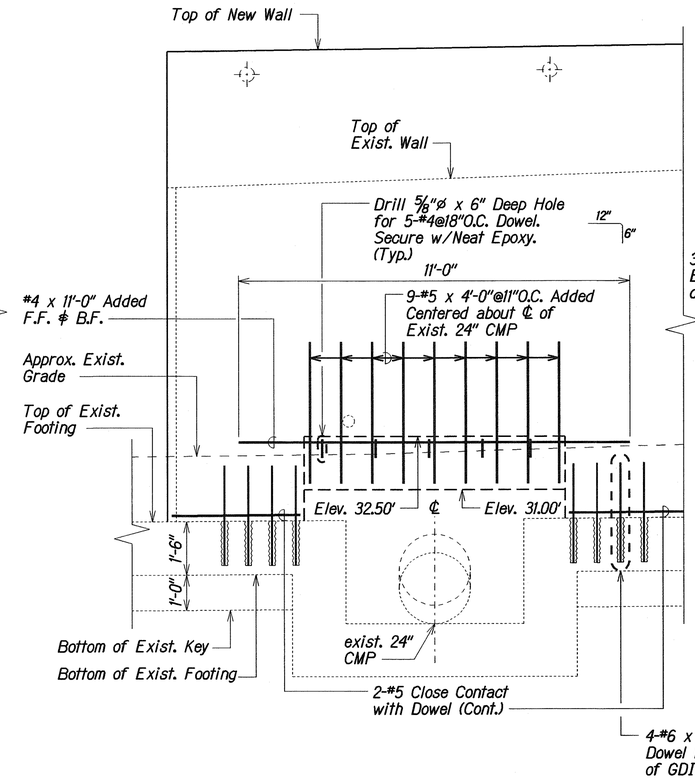

SECTION D3 (Q14 | Q15)
Scale: ½"=1'-0"

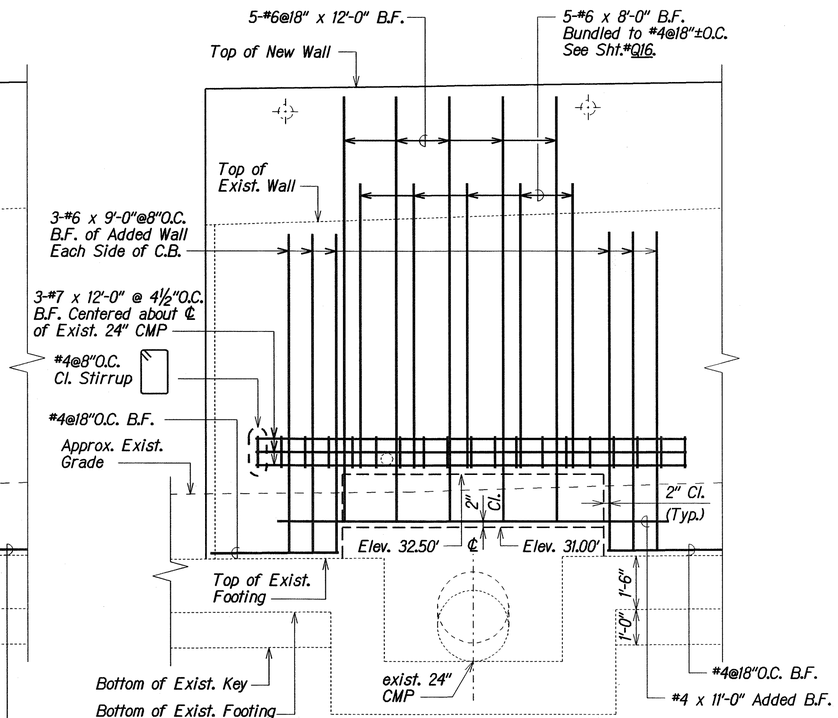

SECTION D4 (Q14 | Q15)
Scale: ½"=1'-0"

ORIGINAL PLAN	SURVEY PLOTTED BY	DATE
	DRAWN BY XXX	XXX 2005
	TRACED BY	XXX 2005
NOTE BOOK	DESIGNED BY XXX	XXX 2005
	QUANTITIES BY XXX	XXX 2005
N:\ah\hg15.dgn	CHECKED BY XXX	XXX 2005

WALL "G" AT C.B. #64-F - RAMP 7 STA. 7+47±

STATE OF HAWAII
DEPARTMENT OF TRANSPORTATION
HIGHWAYS DIVISION

RETAINING WALL REPAIR
WALL "G" AT C.B. #64-F SECTIONS
INTERSTATE ROUTE H-1
EXTENSION AND REPAIR OF
SCHOOL STREET ON-RAMP RETAINING WALL
Project No. HII-01-08

Scale: As Noted — Date: Feb. 2009

SHEET No. Q15 OF 34 SHEETS

FED. ROAD DIST. NO.	STATE	FED. AID PROJ. NO.	FISCAL YEAR	SHEET NO.	TOTAL SHEETS
HAWAII	HAW.	HII-01-08	2009	24	73

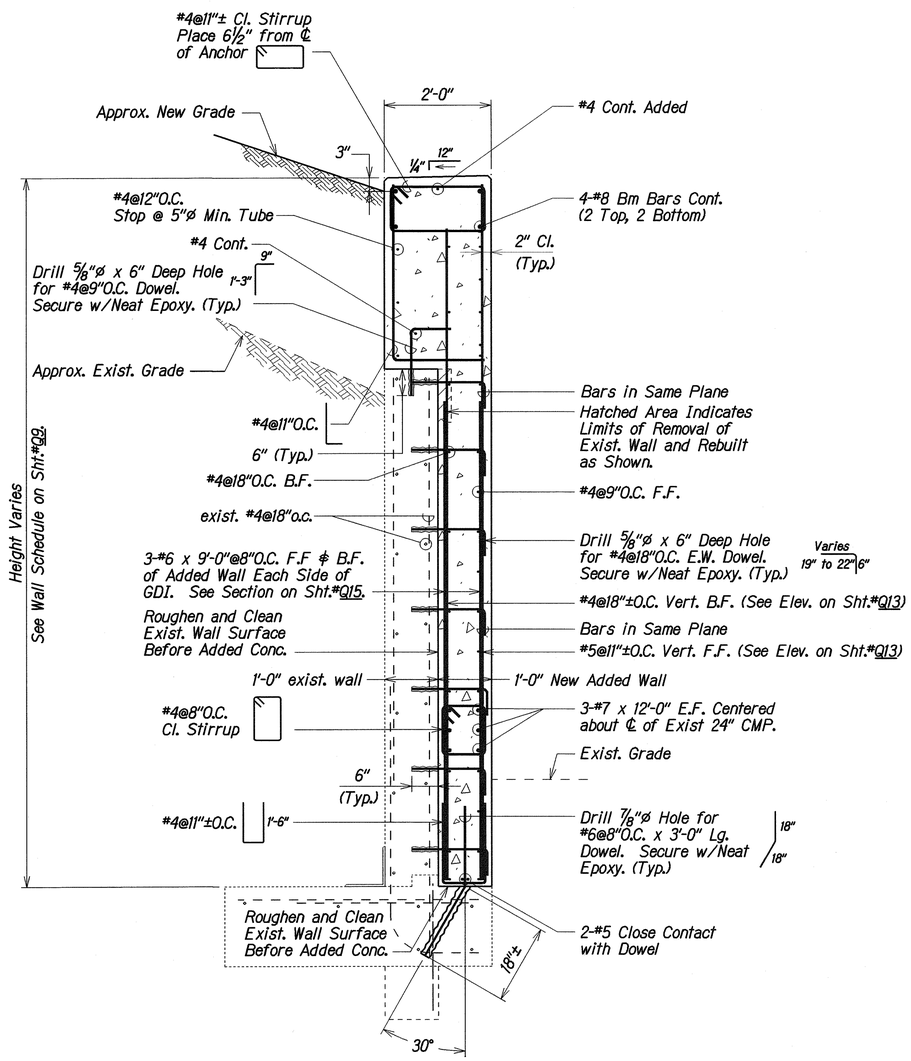

(Wall "G" at Sta. 7+42.50±)

SECTION D5 (Q13 | Q16)

Scale: ¾"=1'-0"

ORIGINAL PLAN	SURVEY PLOTTED BY XXX	DATE XXX 2008
	DRAWN BY XXX	
	TRACED BY XXX	XXX 2008
NOTE BOOK	DESIGNED BY XXX	XXX 2008
	QUANTITIES BY XXX	XXX 2008
N:\rthw\fc.dgn	CHECKED BY XXX	XXX 2008

STATE OF HAWAII
DEPARTMENT OF TRANSPORTATION
HIGHWAYS DIVISION

RETAINING WALL REPAIR

SECTION D5

INTERSTATE ROUTE H-1
EXTENSION AND REPAIR OF
SCHOOL STREET ON-RAMP RETAINING WALL
Project No. HII-01-08

Scale: As Noted — Date: Feb., 2009

SHEET No. Q16 OF 34 SHEETS

FED. ROAD DIST. NO.	STATE	PROJ. NO.	FISCAL YEAR	SHEET NO.	TOTAL SHEETS
HAWAII	HAW.	HII-01-08	2009	ADD. 25	73

LEGEND FOR AS-BUILT POSTINGS

~~	Squiggly line for as-built deletion
~~100.00~~	Double line for as-built deletion
Roadway	Text for as-built posting

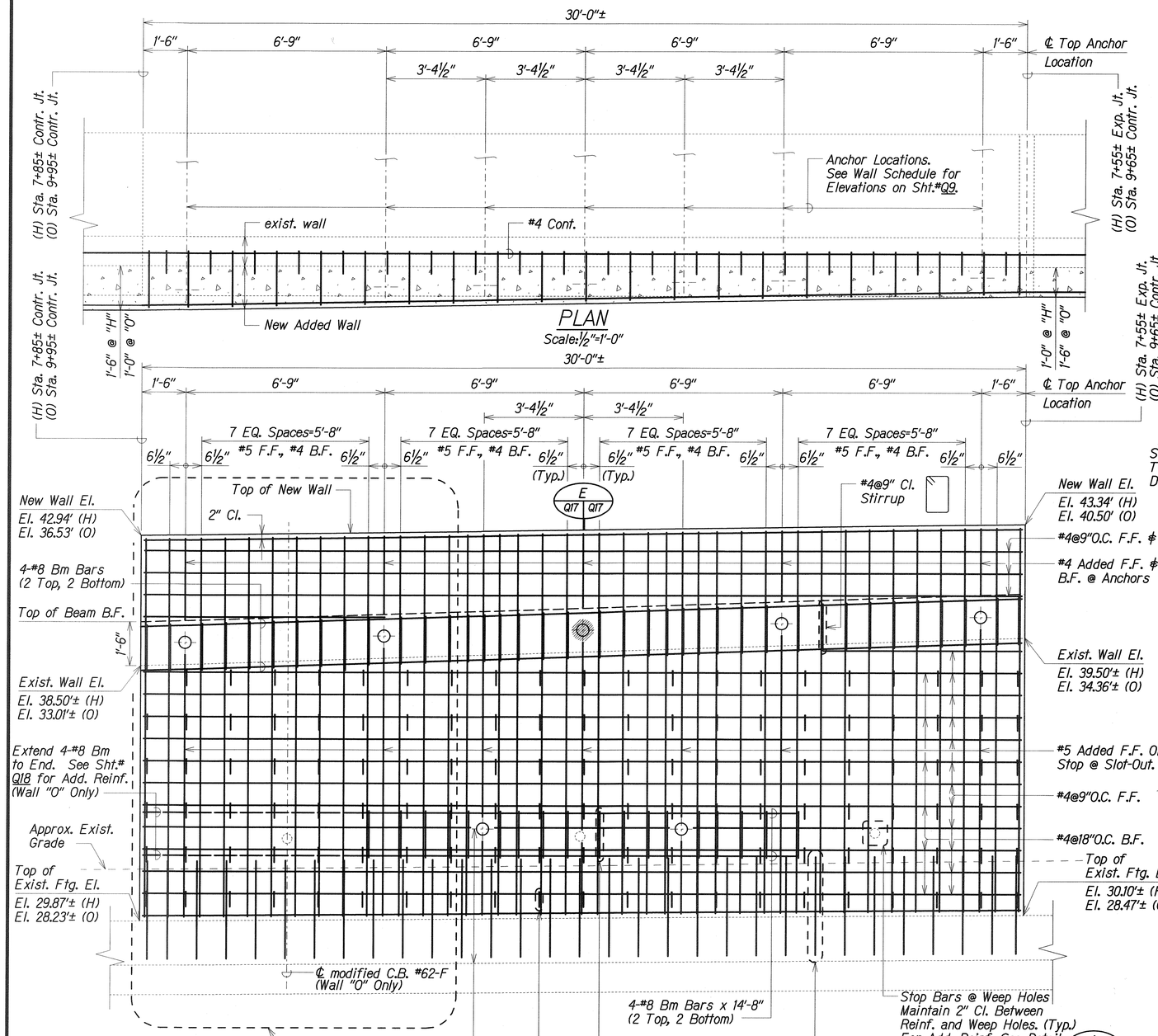

PLAN

Scale: ½"=1'-0"

ELEVATION

Scale: ½"=1'-0"

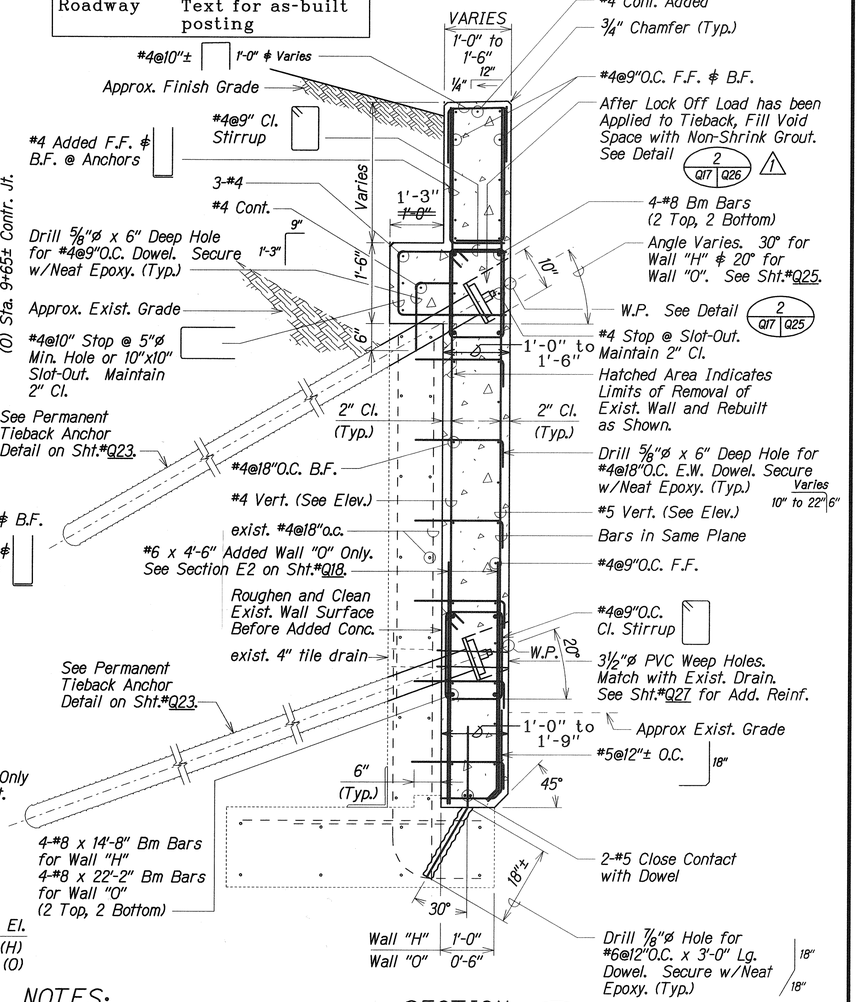

SECTION E

Scale: ¾"=1'-0" (Q17 | Q17)

NOTES:

1. For Slot-Out Details, See Sht.#Q25 & Q26.
2. ∠ of All Lower Anchors from Horizontal Shall be 20°.
3. For Expansion & Contraction Joint Details, See Sht.#Q7.
4. For W.P. Elevations for Anchor, See Sht.#Q9 & Q25.
5. Refer to Sht.#Q18 for Additional Reinfor. at Exist. Modified C.B. #62-F.

LEGEND

◎	Indicates Proof Test Anchor
⊕	Permanent Tieback Anchor
43.34' (G)	Elevation and Designated Wall Panel
○	Existing Weep hole

WALL "H" DETAILS

WALL "O" SIMILAR EXCEPT AS NOTED

DATE	REVISION
3/31/09	Revised Detail Designation

STATE OF HAWAII
DEPARTMENT OF TRANSPORTATION
HIGHWAYS DIVISION

RETAINING WALL REPAIR

WALL "H" & "O" DETAILS

INTERSTATE ROUTE H-1
EXTENSION AND REPAIR OF
SCHOOL STREET ON-RAMP RETAINING WALL
Project No. HII-01-08

Scale: As Noted — Date: Feb. 2009

SHEET No. Q17 OF 34 SHEETS

ORIGINAL PLAN	SURVEY PLOTTED BY XXX	DATE XXX 2009
	DRAWN BY XXX	
	TRACED BY XXX	XXX 2009
NOTE BOOK	DESIGNED BY XXX	XXX 2009
	QUANTITIES BY XXX	XXX 2009
No.	CHECKED BY XXX	XXX 2009

"AS-BUILT"

ADD. 25

FED. ROAD DIST. NO.	STATE	FED. AID PROJ. NO.	FISCAL YEAR	SHEET NO.	TOTAL SHEETS
HAWAII	HAW.	HII-01-08	2009	26	73

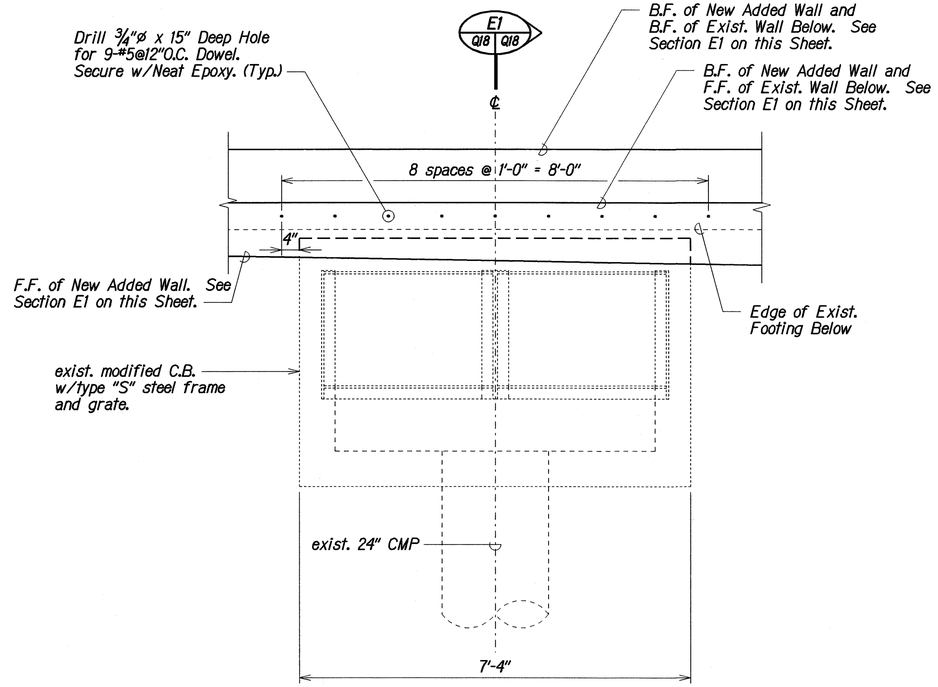

PLAN
Scale: ¾"=1'-0"

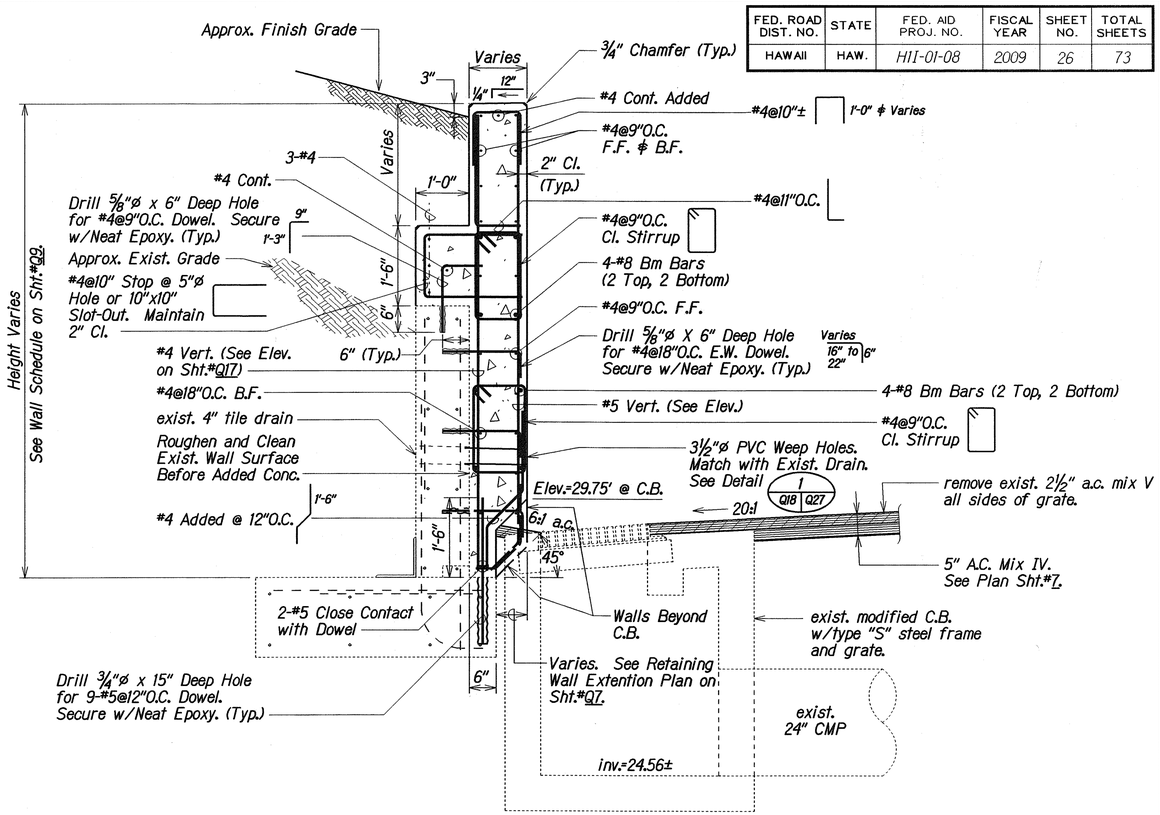

SECTION E1 Q18 Q18
Scale: ¾"=1'-0"
Q7

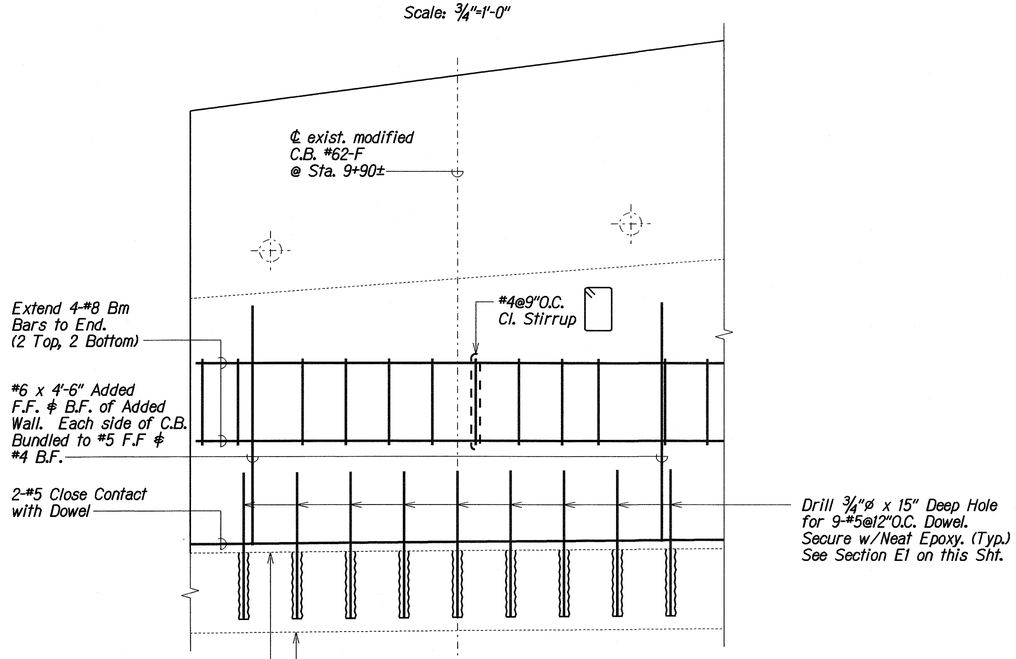

SECTION E2 Q18 Q18
Scale: ¾"=1'-0"

WALL "0" AT MODIFIED C.B.#62-F - RAMP 7 ∮ STA. 9+90±

ORIGINAL PLAN	SURVEY PLOTTED BY XXX	DATE XXX 2008
	DRAWN BY XXX	
	TRACED BY XXX	XXX 2008
NOTE BOOK	DESIGNED BY XXX	XXX 2008
	QUANTITIES BY XXX	XXX 2008
No. hii01q18.dgn	CHECKED BY XXX	XXX 2008

STATE OF HAWAII
DEPARTMENT OF TRANSPORTATION
HIGHWAYS DIVISION

RETAINING WALL REPAIR
WALL "0" AT MODIFIED C.B. #62-F
PLAN, PARTIAL ELEVATION AND SECTION
INTERSTATE ROUTE H-1
EXTENSION AND REPAIR OF
SCHOOL STREET ON-RAMP RETAINING WALL
Project No. HII-01-08

Scale: As Noted Date: Feb., 2009

SHEET No. Q18 OF 34 SHEETS

FED. ROAD DIST. NO.	STATE	PROJ. NO.	FISCAL YEAR	SHEET NO.	TOTAL SHEETS
HAWAII	HAW.	HII-01-08	2009	ADD. 27	73

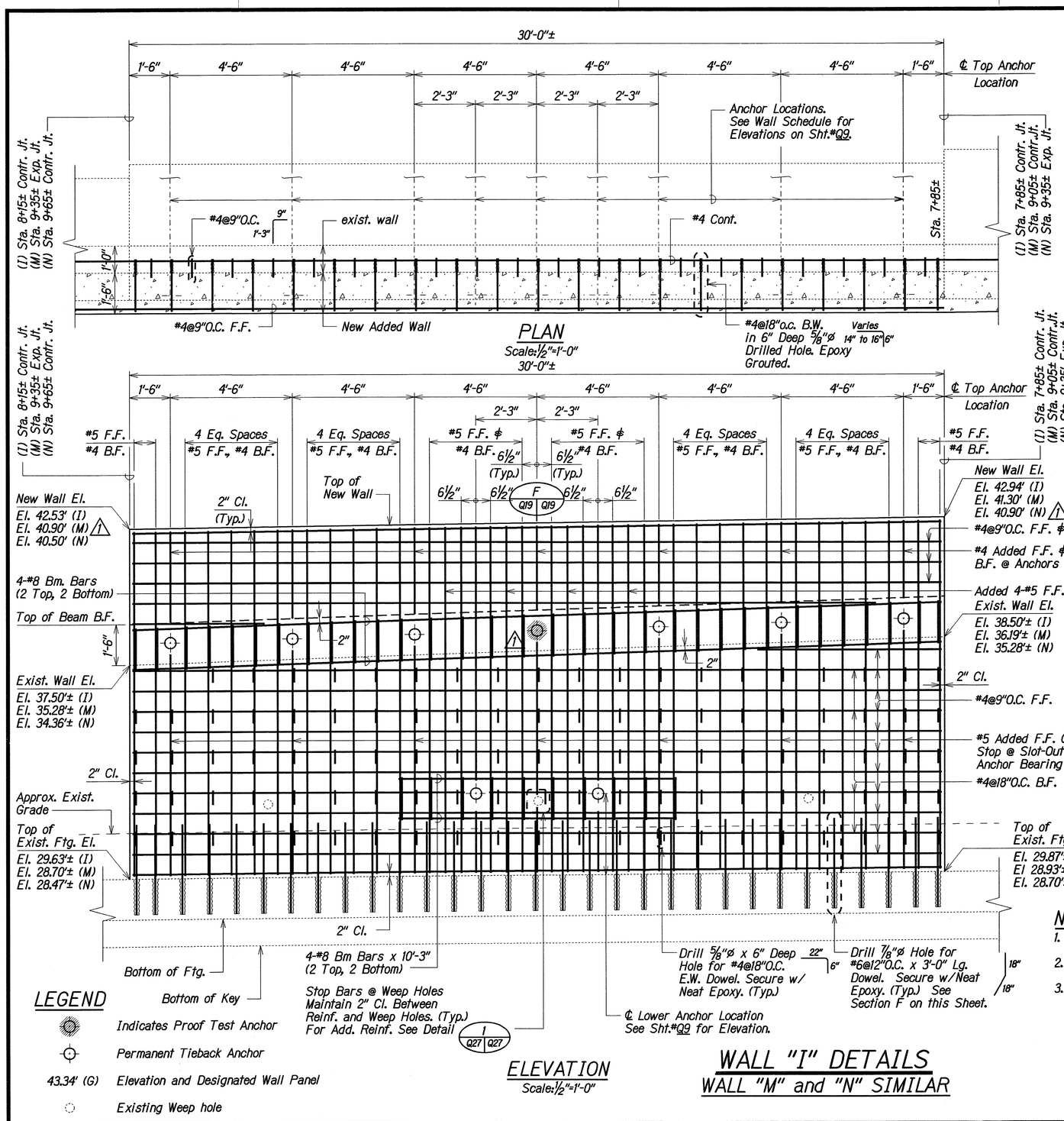

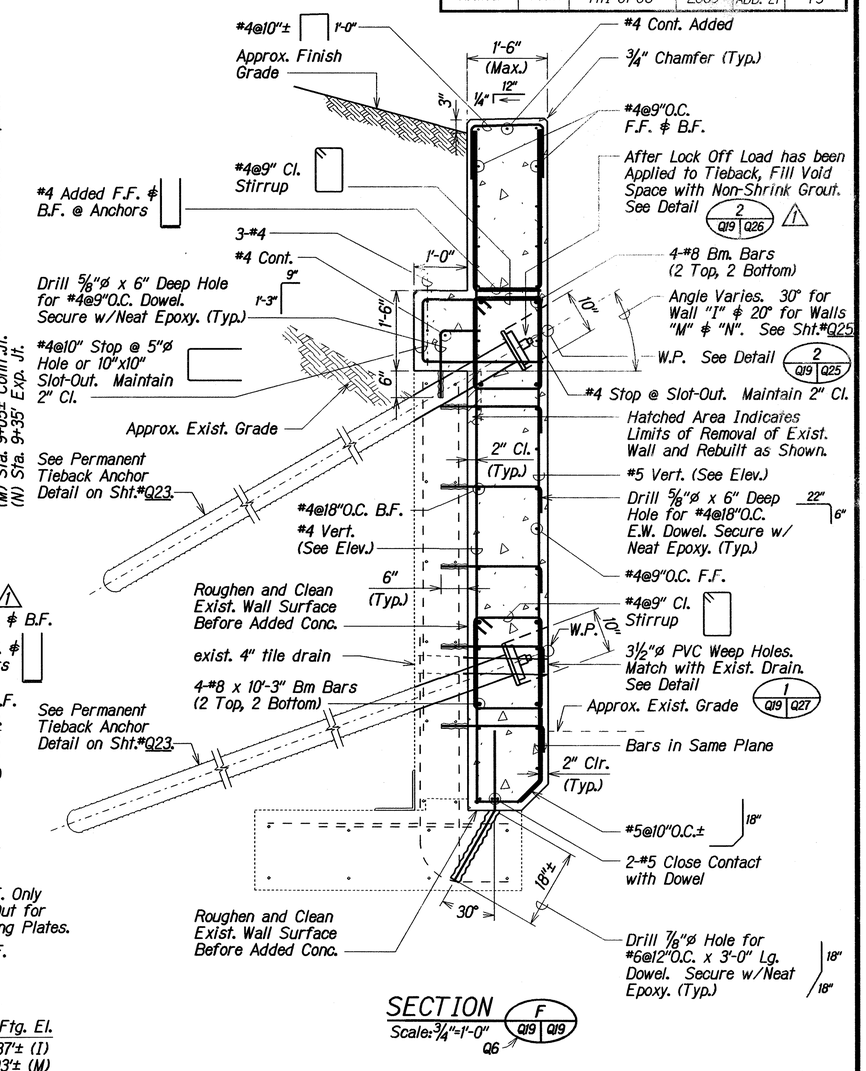

NOTES:

1. ∠ of All Lower Anchors from Horizontal Shall be 20°.
2. For Slot-Out Details, Sse Sheets Q25 ∕ Q26.
3. For Expansion ∕ Contraction Joint Details, See Sht.#Q7.

LEGEND

- Indicates Proof Test Anchor
- Permanent Tieback Anchor
- 43.34' (G) Elevation and Designated Wall Panel
- Existing Weep hole

DATE	REVISION
3/31/09	Revised New Wall Elevations (M) ∕ (N), Revised Detail Designation and Hatched Proof Test Anchor

STATE OF HAWAII
DEPARTMENT OF TRANSPORTATION
HIGHWAYS DIVISION

RETAINING WALL REPAIR
WALL "I", "M" AND "N" DETAILS
INTERSTATE ROUTE H-1
EXTENSION AND REPAIR OF
SCHOOL STREET ON-RAMP RETAINING WALL
Project No. HII-01-08

Scale: As Noted — Date: Feb., 2009

SHEET No. Q19 OF 34 SHEETS

ORIGINAL PLAN	SURVEY PLOTTED BY XXX	DATE XXX 2008
	SURVEY BY XXX	
	NOTE BOOK	TRACED BY XXX 2009
		DESIGNED BY XXX 2009
		QUANTITIES BY XXX 2009
		CHECKED BY XXX 2009

ADD. 27

FED. ROAD DIST. NO.	STATE	PROJ. NO.	FISCAL YEAR	SHEET NO.	TOTAL SHEETS
HAWAII	HAW.	H11-01-08	2009	C.O. ADD. 27	73

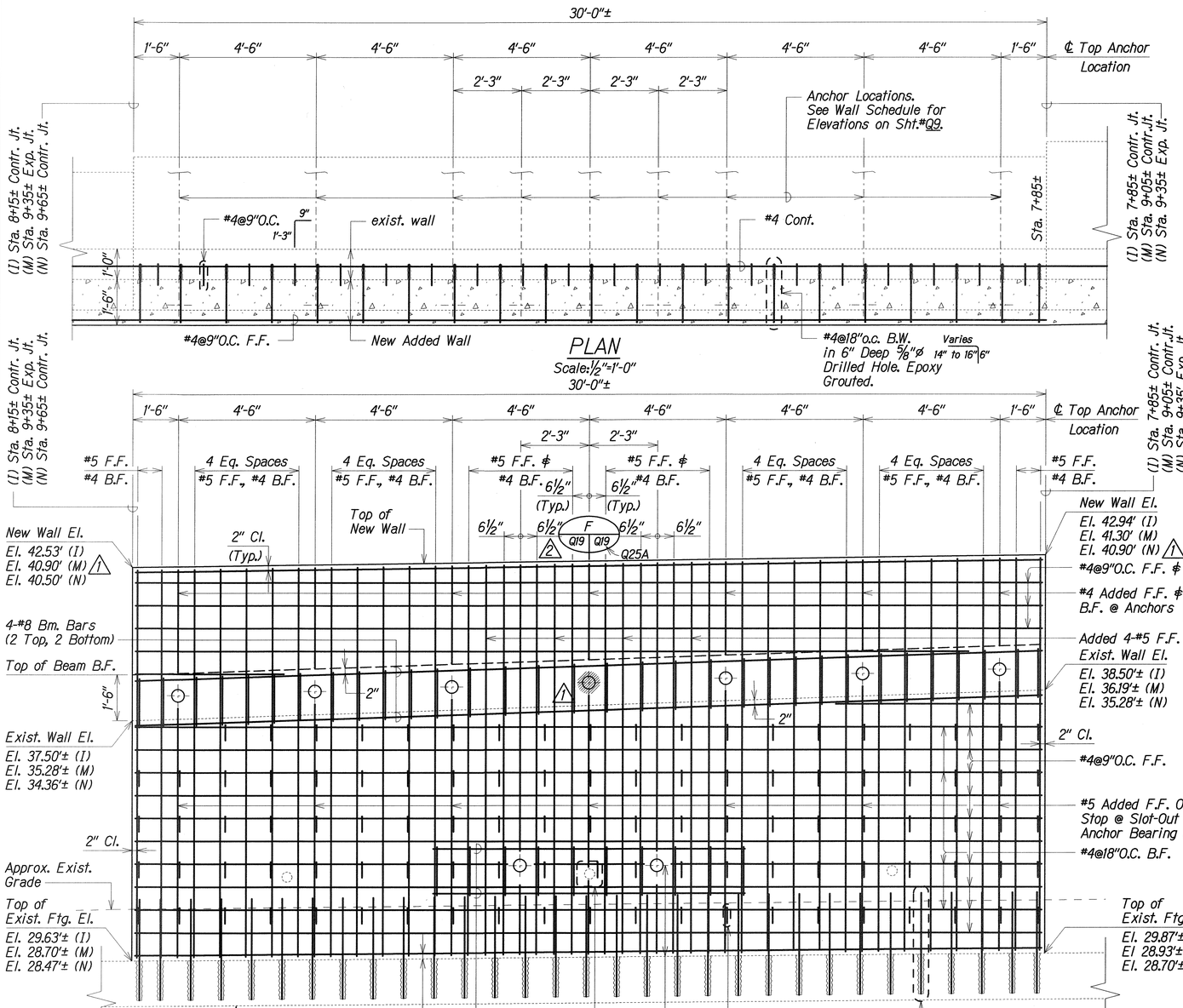

PLAN
Scale: 1/2"=1'-0"

ELEVATION
Scale: 1/2"=1'-0"

LEGEND

- Indicates Proof Test Anchor
- Permanent Tieback Anchor
- 43.34' (G) Elevation and Designated Wall Panel
- Existing Weep hole

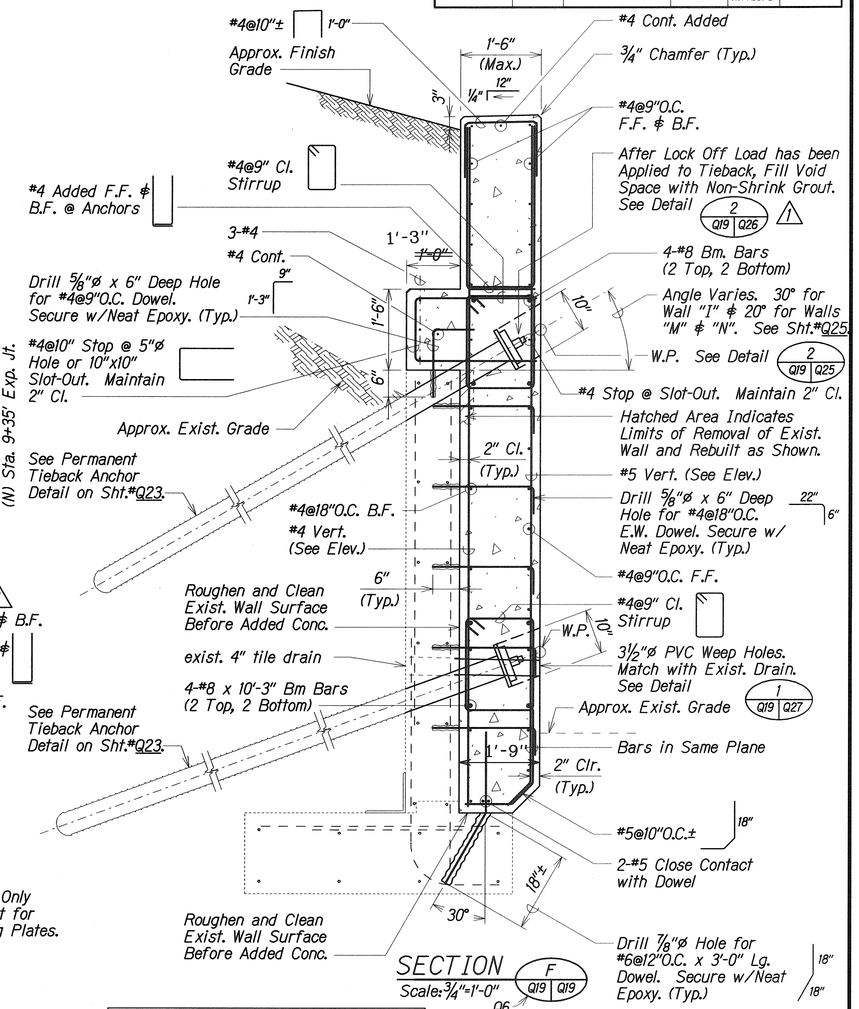

SECTION F Q19 Q19
Scale: 3/4"=1'-0"
Q6

LEGEND FOR AS-BUILT POSTINGS

~~	Squiggly line for as-built deletion
~~100.00~~	Double line for as-built deletion
Roadway	Text for as-built posting

NOTES:

1. ∠ of All Lower Anchors from Horizontal Shall be 20°.
2. For Slot-Out Details, Sse Sheets Q25 & Q26.
3. For Expansion & Contraction Joint Details, See Sht.#Q7.
4. Additional Reinf. @ Wall "M" Only, See Sht.#Q25A. 2

DATE	REVISION
2 8/17/09	Added Note No. 4, for Wall "M" Only and Added Sheet Number to Detail Symbol
1 3/31/09	Revised New Wall Elevations (M) & (N), Revised Detail Designation and Hatched Proof Test Anchor

STATE OF HAWAII
DEPARTMENT OF TRANSPORTATION
HIGHWAYS DIVISION

RETAINING WALL REPAIR
WALL "I", "M" AND "N" DETAILS
INTERSTATE ROUTE H-1
EXTENSION AND REPAIR OF
SCHOOL STREET ON-RAMP RETAINING WALL
Project No. H11-01-08

Scale: As Noted — Date: Feb. 2009

SHEET No. Q19 OF 34 SHEETS

ORIGINAL PLAN	SURVEY PLOTTED BY	DATE
	DRAWN BY XXX	XXX 2009
	TRACED BY	XXX 2009
NOTE BOOK	DESIGNED BY XXX	XXX 2009
	QUANTITIES BY XXX	XXX 2009
N.	CHECKED BY XXX	XXX 2009

"AS-BUILT"

C.O. ADD. 27

FED. ROAD DIST. NO.	STATE	PROJ. NO.	FISCAL YEAR	SHEET NO.	TOTAL SHEETS
HAWAII	HAW.	HII-01-08	2009	ADD. 28	73

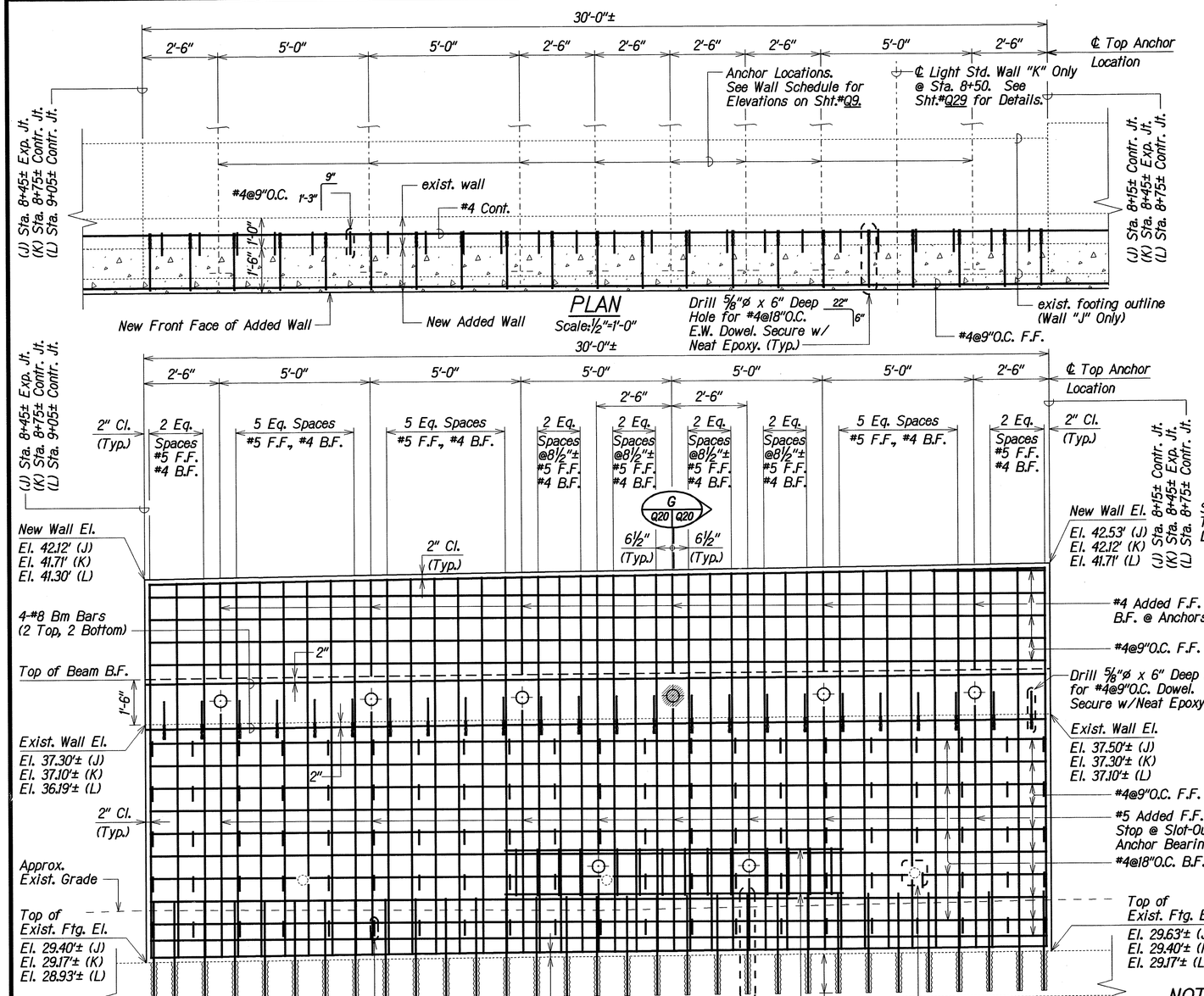

ELEVATION
Scale: 1/2"=1'-0"

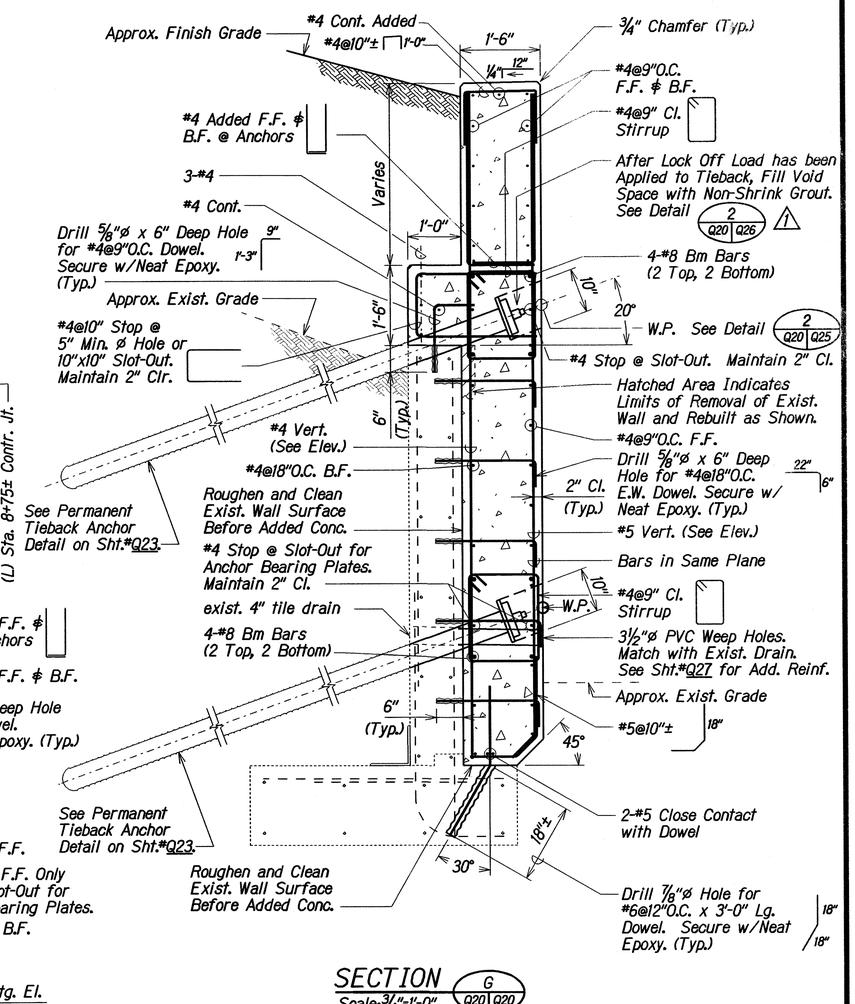

SECTION G Q20 Q20
Scale: 3/4"=1'-0"

NOTES:

1. For Walls "K" & "L" Wall Elevations. Refer to Wall Schedule on Sht.#Q9.
2. ∠ of All Lower Anchors from Horizontal Shall be 20°.
3. For Expansion & Contraction Joint Details, See Sht.#Q7.

LEGEND

- Indicates Proof Test Anchor
- Permanent Tieback Anchor
- 43.34' (G) Elevation and Wall Panel
- Existing Weep hole

WALL "J" DETAILS

WALLS "K" and "L" SIMILAR EXCEPT AS NOTED

DATE	REVISION
3/31/09	Revised Detail Designation

STATE OF HAWAII
DEPARTMENT OF TRANSPORTATION
HIGHWAYS DIVISION

RETAINING WALL REPAIR
WALL "J", "K" AND "L" DETAILS
INTERSTATE ROUTE H-1
EXTENSION AND REPAIR OF
SCHOOL STREET ON-RAMP RETAINING WALL
Project No. HII-01-08

Scale: As Noted — Date: Feb., 2009

SHEET No. Q20 OF 34 SHEETS

ADD. 28

ORIGINAL PLAN	SURVEY PLOTTED BY	DRAWN BY	TRACED BY	DESIGNED BY	QUANTITIES BY	CHECKED BY	DATE
	XXX	XXX	XXX	XXX	XXX	XXX	XXX 2009
NOTE BOOK							

FED. ROAD DIST. NO.	STATE	PROJ. NO.	FISCAL YEAR	SHEET NO.	TOTAL SHEETS
HAWAII	HAW.	HII-01-08	2009	C.O. ADD. 28	73

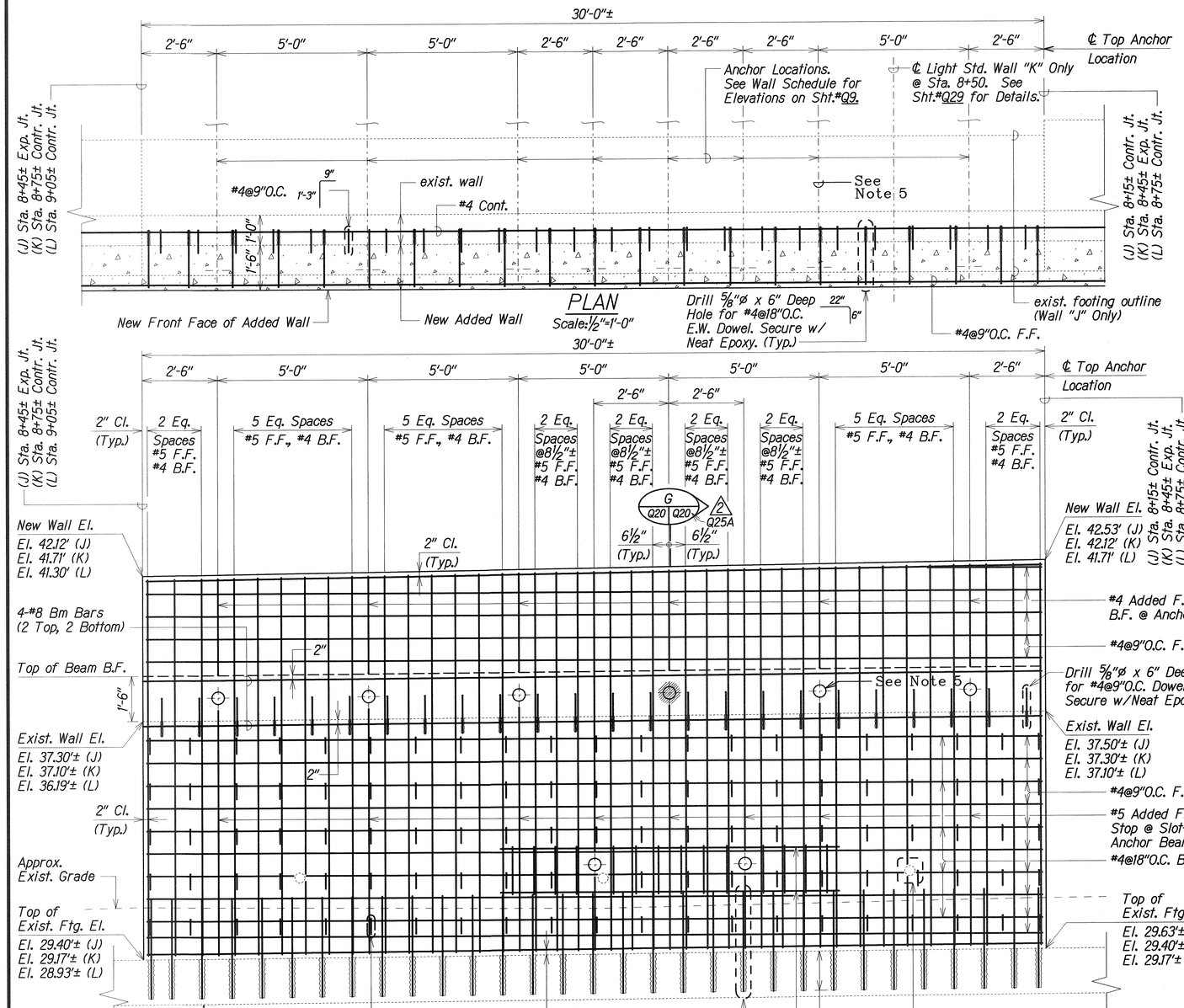

PLAN
Scale: ½"=1'-0"

ELEVATION
Scale: ½"=1'-0"

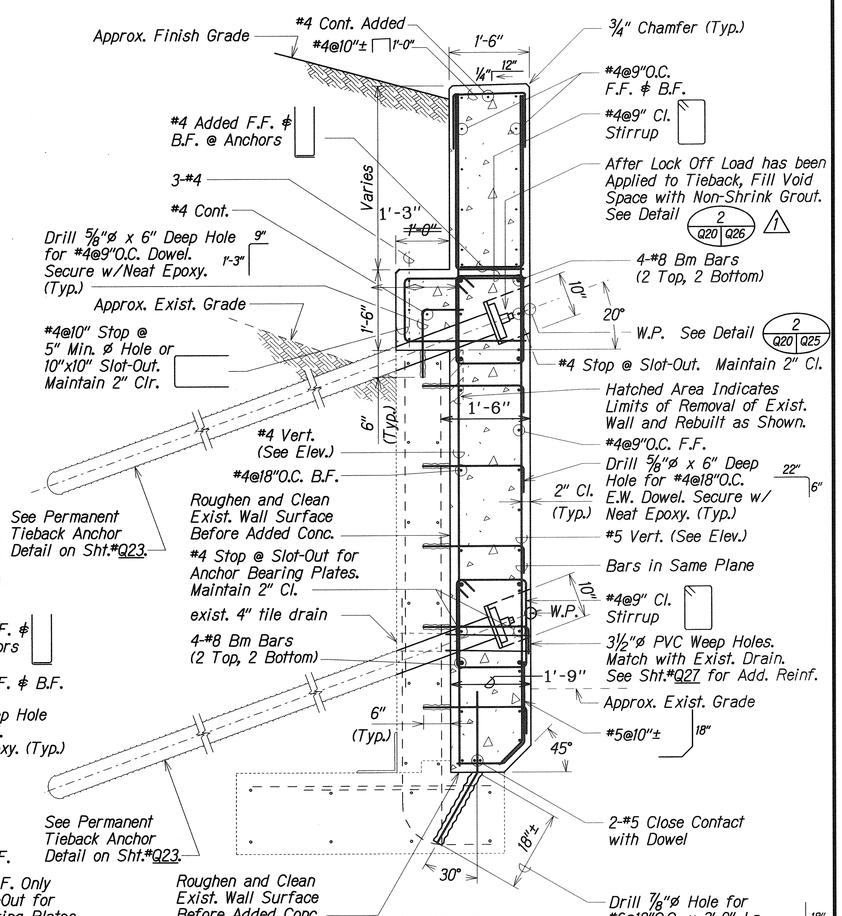

SECTION
Scale: ¾"=1'-0"
G Q20 Q20

LEGEND

- Indicates Proof Test Anchor
- Permanent Tieback Anchor
- 43.34' (G) Elevation and Wall Panel
- Existing Weep hole

LEGEND FOR AS-BUILT POSTINGS

~~	Squiggly line for as-built deletion
~~100.00~~	Double line for as-built deletion
Roadway	Text for as-built posting

NOTES:

1. For Walls "K" ∉ "L" Wall Elevations. Refer to Wall Schedule on Sht.#Q9.
2. ∠ of All Lower Anchors from Horizontal Shall be 20°.
3. For Expansion ∉ Contraction Joint Details, See Sht.#Q7.
4. Additional Reinf. @ Walls "K" and "L", See Sht.#Q25A. 2
5. Tieback Anchor No. 5 length extended to 37'-0" (Wall "J" Only).

DATE	REVISION
2 8/17/09	Added Note No. 4, for Walls "K" and "L". Added Sheet Number to Detail Symbol
1 3/31/09	Revised Detail Designation

STATE OF HAWAII
DEPARTMENT OF TRANSPORTATION
HIGHWAYS DIVISION

RETAINING WALL REPAIR

WALL "J", "K" AND "L" DETAILS

INTERSTATE ROUTE H-1
EXTENSION AND REPAIR OF
SCHOOL STREET ON-RAMP RETAINING WALL
Project No. HII-01-08

Scale: As Noted — Date: Feb. 2009

SHEET No. Q20 OF 34 SHEETS

ORIGINAL PLAN	SURVEY PLOTTED BY	XXX	DATE	XXX 2009
	DRAWN BY	XXX		XXX 2009
	TRACED BY	XXX		XXX 2009
NOTE BOOK	DESIGNED BY	XXX		XXX 2009
	QUANTITIES BY	XXX		XXX 2009
N:\ghb\Q20.dgn	CHECKED BY	XXX		XXX 2009

WALL "J" DETAILS

WALLS "K" and "L" SIMILAR EXCEPT AS NOTED

"AS-BUILT"

C.O. ADD. 28

FED. ROAD DIST. NO.	STATE	PROJ. NO.	FISCAL YEAR	SHEET NO.	TOTAL SHEETS
HAWAII	HAW.	H11-01-08	2009	ADD. 29	73

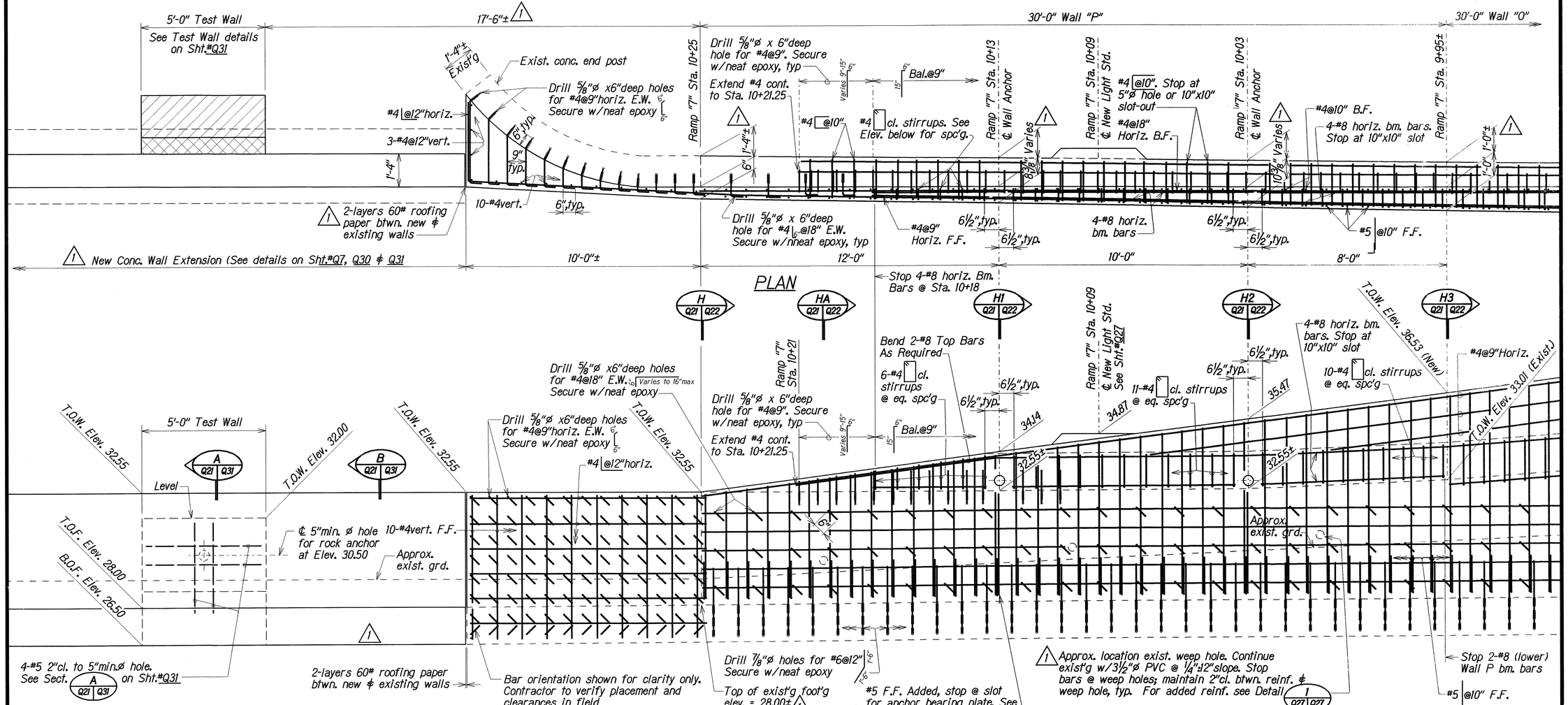

DATE	DESCRIPTION
3/31/09	Revised callouts and/or added dimension(s). Added note(s). Relocate test wall ftg. lines. Added legend. Added Sec HA Q21 Q22

LEGEND

- Indicates Permanent Tieback Anchor
- Indicates Existing Weep Hole

TEST WALL, SCHOOL STREET END POST and WALL "P" DETAILS
REPAIR of SCHOOL STREET ON-RAMP RETAINING WALL

Scale: ½" = 1'-0"

STATE OF HAWAII
DEPARTMENT OF TRANSPORTATION
HIGHWAYS DIVISION

RETAINING WALL REPAIR

TEST WALL, SCHOOL ST. END POST and WALL "P" DETAILS

INTERSTATE ROUTE H-1, EXTENSION and REPAIR of SCHOOL STREET ON-RAMP RETAINING WALL
Project No. H11-01-08

Scale: As Noted — Date: Feb. 2009

SHEET No. Q21 OF 34 SHEETS

ORIGINAL PLAN	SURVEY PLOTTED BY XXX DATE XXX 2008
	DRAWN BY XXX
	TRACED BY XXX
NOTE BOOK	DESIGNED BY XXX 2008
	QUANTITIES BY XXX 2008
	CHECKED BY XXX 2008

ADD. 29

FED. ROAD DIST. NO.	STATE	PROJ. NO.	FISCAL YEAR	SHEET NO.	TOTAL SHEETS
HAWAII	HAW.	H11-01-08	2009	ADD. 30	73

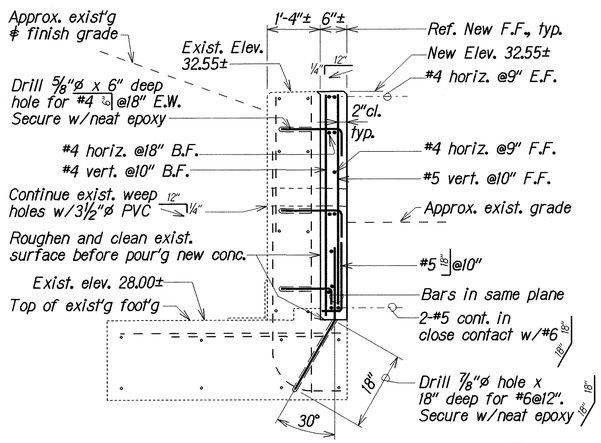

SECTION at RAMP 7 STA. 10+25± (H / Q21 Q22)
Scale: 3/4" = 1'-0"

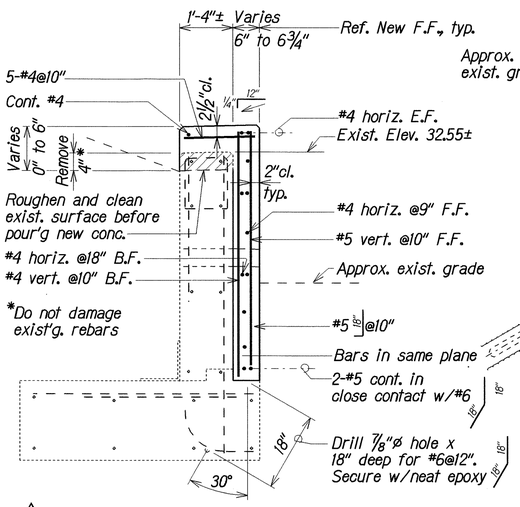

1 SECTION at RAMP 7 STA. 10+25± to 10+21.25 (HA / Q21 Q22)
Scale: 3/4" = 1'-0"

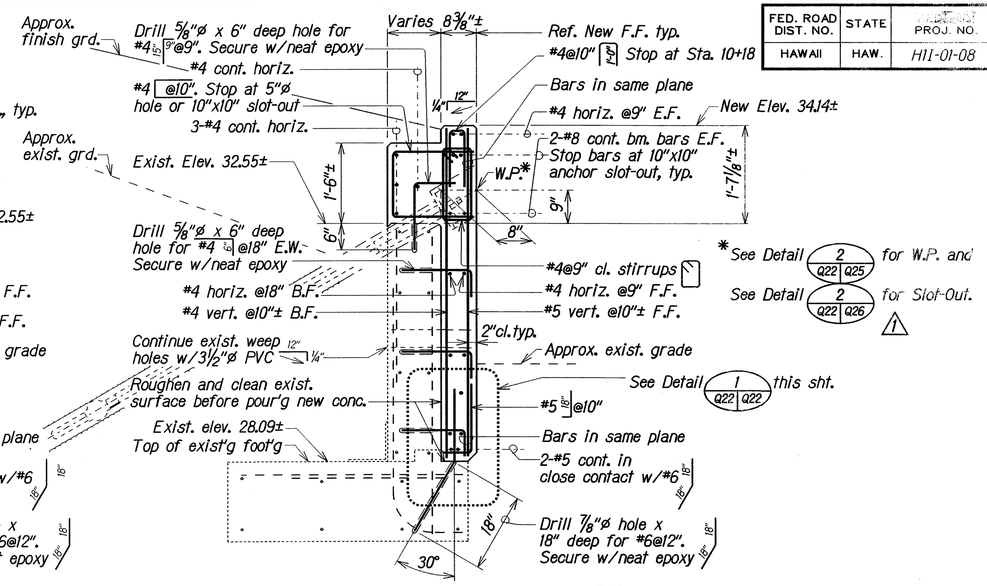

SECTION at RAMP 7 STA. 10+13± (H1 / Q21 Q22)
Scale: 3/4" = 1'-0"

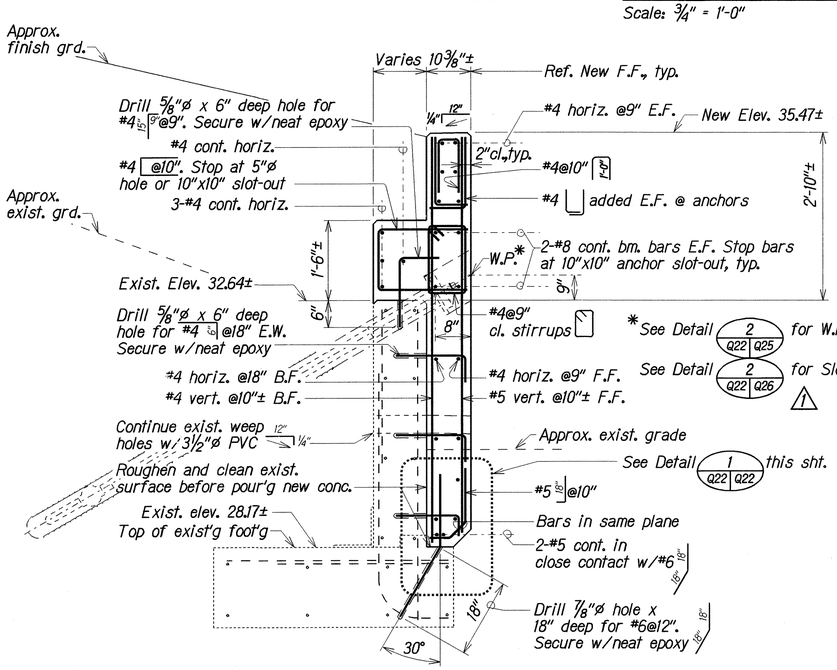

SECTION at RAMP 7 STA. 10+03± (H2 / Q21 Q22)
Scale: 3/4" = 1'-0"

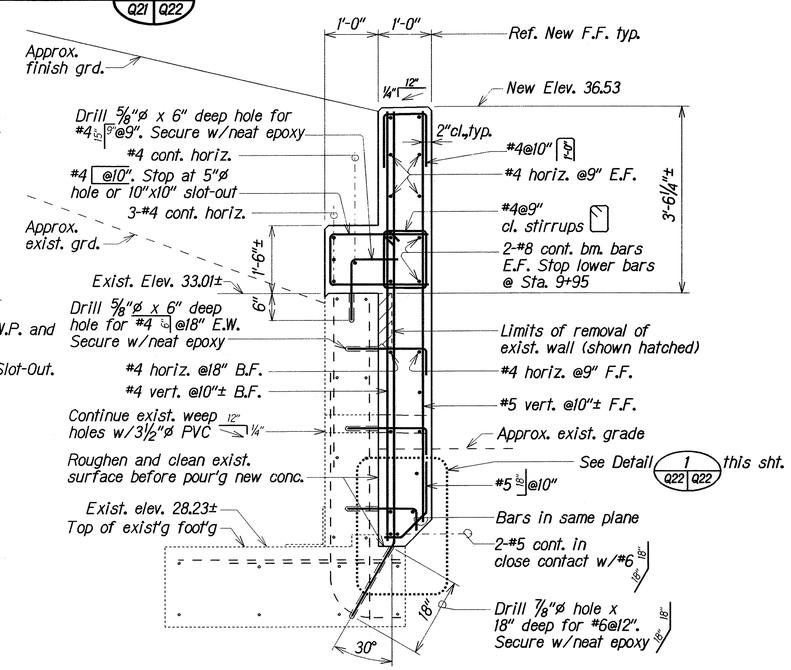

SECTION at RAMP 7 STA. 9+95± (H3 / Q21 Q22)
Scale: 3/4" = 1'-0"

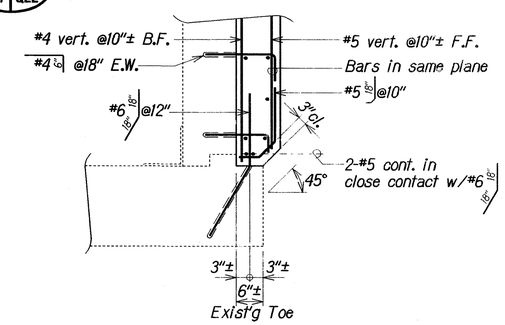

DETAIL 1 (Q22 Q22)
Scale: 3/4" = 1'-0"

WALL "P" SECTIONS

1 3/31/09	Added Detail Symbol and Section HA (Q21 Q22)
DATE	DESCRIPTION

STATE OF HAWAII
DEPARTMENT OF TRANSPORTATION
HIGHWAYS DIVISION

RETAINING WALL REPAIR

WALL "P" SECTIONS

INTERSTATE ROUTE H-1
EXTENSION and REPAIR of
SCHOOL STREET ON-RAMP RETAINING WALL
Project No. H11-01-08

Scale: As Noted — Date: Feb. 2009

SHEET No. Q22 OF 34 SHEETS

ORIGINAL PLAN	SURVEY PLOTTED BY XXX	DATE XXX 2008
	DRAWN BY XXX	XXX 2008
NOTE BOOK	TRACED BY XXX	XXX 2008
	DESIGNED BY XXX	XXX 2008
	QUANTITIES BY XXX	XXX 2008
N:\Q\Q22.dgn	CHECKED BY XXX	XXX 2008

ADD. 30

FED. ROAD DIST. NO.	STATE	FED. AID PROJ. NO.	FISCAL YEAR	SHEET NO.	TOTAL SHEETS
HAWAII	HAW.	HII-01-08	2009	31	73

PHYSICAL PROPERTIES OF ASTM A722 1"* GR. 150 DYWIDAG THREADBAR OR APPROVED EQUAL	
Effective Area:	0.85 SQ. IN.
Ultimate Strength:	150 KSI
Ultimate Load:	127.5 KIPS
Yield Load:	102.8 KIPS
Max. Test Load:	102.0 KIPS
Weight:	3.01 LBS/FT
TOTAL NO. OF ANCHORS = 98 EACH	

NOTE:

1. Refer to Contract Drawings for Anchor Locations & Details not shown.
2. For Walls "A" to "D", Drilling Thru Exist. Footing may be Required & Reinforcing Steel may be encountered.

* Includes Both Top & Lower Anchors. Also Performance Test Panel Anchor.

** For Walls "B" to "D"

*** For Walls "E" to "P" and Performance Test Wall

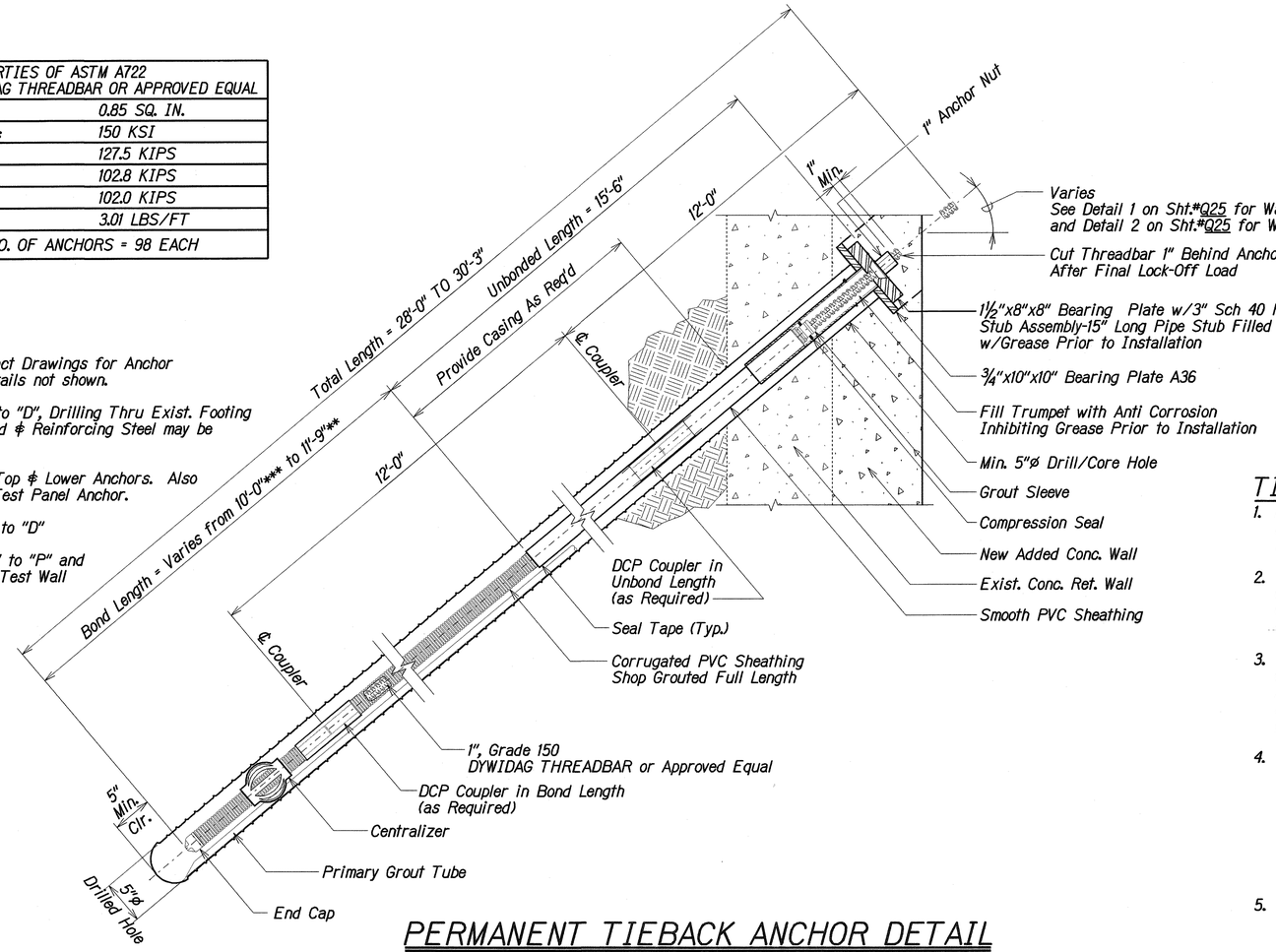

PERMANENT TIEBACK ANCHOR DETAIL

Scale: 1½"=1'-0"

TIEBACK ANCHOR NOTES:

1. Before starting any tieback work, Contractor shall have successfuly completed the Performance and Extended Creep Test on the Test Panel located at Sta. 10+42.5±. See Section 681 of the Special Provisions.
2. After Performance and Extended Creep Tests have been successfully completed, Contractor may work on the various retaining wall panels. For each wall panel (A through P), Contractor shall have successfully completed the specified proof tests before doing any work on the other tiebacks for that wall panel. See Section 681 of the Special Provisions.
3. High strength threaded bar shall be 1" diameter per ASTM A722, Type II, Grade 150 (Bar Yield Point = 150 KIPS/in.^{2} and Ulitimate Load = 127.5 KIPS) and Galvanized Per ASTM A153. Yield Strength shall not be reduced by more than 5% after galvanized. In addition, Anchor Assembly, including angle compensating nuts or bevel washers shall be galvanized per ASTM A153.
4. Design Criteria/ Definitions
   - A. Loads = Earth Pressure + Live Load Surcharge + Fluid Pressure of Undrained Water
   - B. Design Load = Earth Pressure (E.P.) - 100 lb./ft.^{3}; Live Load Surcharge - 2.0 x E.P.; Fluid Pressure(Undrained Water) - 62.4 lb/ft.^{3}
   - C. Load Factors = Earth Pressure 1.5; Live Load Surcharge - 1.75 & Fluid Pressure - 1.0
   - D. Max Test Load = 1.5 Time Design Load
   - E. Lock-Off Load = Min. 5% of Design Load
Max. 10% of Design Load
5. Grout Tubes shall be placed through the Bearing Steel Plate. Size and Locations shall ensure Full Grouting of Hole. The Contractor Shall Submit Grouting Details for Aprroved by the Engineer.
6. For High Strength Threaded Bar or Equal.
   - A. Do Not Weld Bar.
   - B. Do Not Use Bar as Ground Connection for Welding
   - C. Do not Allow Hot Slag or Sparks to Touch Bar.
   - D. Do Not Damage Bar Surface
7. Provide Casing for Unbonded portion of bored hole until rock is encountered.

TIEBACK TABLE				
ANCHOR LOCATION	DESIGN LOAD (KIPS) 0.53 f's MAX.	PERFORMANCE TEST LOAD AND EXTENDED CREEP (KIPS) *	TRANSFER (LOCKOFF) LOAD (KIPS) MIN. - MAX.	PROOF LOAD (KIPS)
TOP ROW	68	102	3.4 - 6.8	68
BOTTOM ROW	34	-	1.7 - 3.4	34

f's = ULTIMATE TENSILE STRENGTH OF THE TENDON
TRANSER (LOCKOFF) LOAD SHOWN IS AFTER SATISFACTORY PROOF LOAD IS COMPLETED.

* See sheet #Q31.

ORIGINAL PLAN	SURVEY PLOTTED BY XXX	DATE
	DRAWN BY XXX	XXX 2008
NOTE BOOK	TRACED BY XXX	XXX 2008
	DESIGNED BY XXX	XXX 2008
	QUANTITIES BY XXX	XXX 2008
	CHECKED BY XXX	XXX 2008

STATE OF HAWAII
DEPARTMENT OF TRANSPORTATION
HIGHWAYS DIVISION

RETAINING WALL REPAIR

PERMANENT TIEBACK ANCHOR DETAIL AND NOTES

INTERSTATE ROUTE H-1
EXTENSION AND REPAIR OF
SCHOOL STREET ON-RAMP RETAINING WALL
Project No. HII-01-08

Scale: As Noted — Date: Feb, 2009

SHEET No. Q23 OF 34 SHEETS

FED. ROAD DIST. NO.	STATE	FED. AID PROJ. NO.	FISCAL YEAR	SHEET NO.	TOTAL SHEETS
HAWAII	HAW.	HII-01-08	2009	32	73

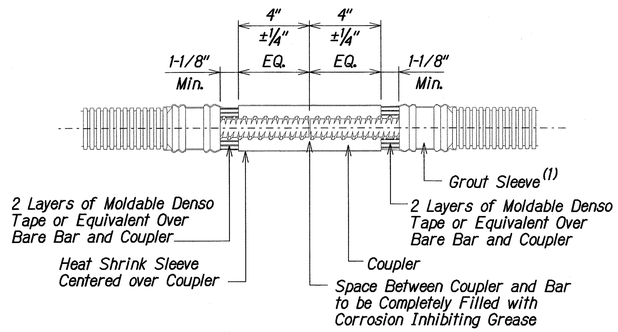

COUPLER INSTALLATION PROCEDURE:

1. Apply Corrosion Inhibiting Grease to the bare ends of the bars and the inside of the coupler.
2. Connect the two bar ends with the coupler. Each end shall be screwed into the coupler half the length of the coupler.
3. Torque bar ends together (200 FT. LBS.).
4. Add another coat of grease to bare bar and coupler and wrap with two layers of Denso Tape or equivalent.
5. Center heat shrink sleeve over coupler and apply heat until sleeve is fully recovered.

PREPARATION FOR FIELD CUT BARS:

1. Cut corrosion protection and thread bar with abrasive saw (Do Not Use a Torch).
2. Carefully remove 4" ±¼" of corrugated PVC and cement grout from end of the new cut.

(1) Delete Grout Sleeve on Field Cut Tendons

1" DOUBLE CORROSION PROTECTED COUPLER FOR BONDED LENGTH

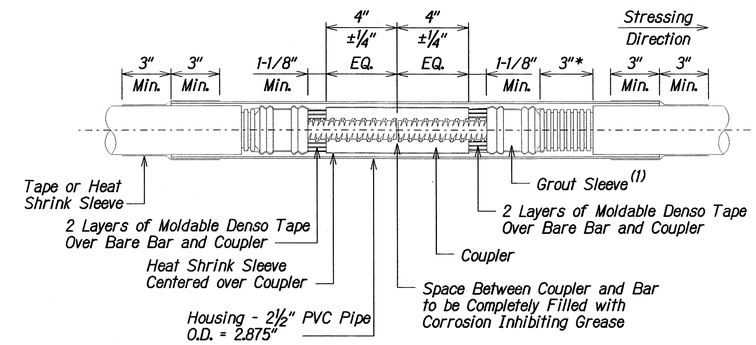

COUPLER INSTALLATION PROCEDURE:

1. Apply Corrosion Inhibiting Grease to the bare ends of the bars and the inside of the coupler.
2. Connect the two bar ends with the coupler. Each end shall be screwed into the coupler half the length of the coupler.
3. Torque bar ends together (200 FT. LBS.).
4. Add another coat of grease to bare bar and coupler and wrap with two layers of Denso Tape or equivalent.
5. Center heat shrink sleeve over coupler and apply heat until sleeve is fully recovered.
6. Slide the coupler and apply tape or heat shrink sleeve at each side.

PREPARATION FOR FIELD CUT BARS:

1. Cut corrosion protection and thread bar with abrasive saw (Do Not Use a Torch).
2. Carefully remove 4" ±¼" of corrugated PVC and cement grout from end of the new cut.

(1) Delete Grout Sleeve on Field Cut Tendons

* This dimension is necessary for coupler movement during stressing with Max. ½" elastic stressing elongation for every 10 ft. of bar 3" are adequate to accommodate the elastic elongation for 60' of bar length, measured from the coupler to the center of the bonded length. This dimension must be increased, if more than 3" of moment are expected.

1" DOUBLE CORROSION PROTECTED COUPLER FOR UNBONDED LENGTH

ORIGINAL PLAN	SURVEY PLOTTED BY	XXX	DATE	
	DRAWN BY	XXX	DATE	XXX 2008
NOTE BOOK	TRACED BY		DATE	XXX 2008
	DESIGNED BY	XXX	DATE	XXX 2008
	QUANTITIES BY	XXX	DATE	XXX 2008
	CHECKED BY	XXX	DATE	XXX 2008

N:\pln\hwy25.dgn

STATE OF HAWAII
DEPARTMENT OF TRANSPORTATION
HIGHWAYS DIVISION

RETAINING WALL REPAIR

PERMANENT TIEBACK ANCHOR DETAIL AND NOTES

INTERSTATE ROUTE H-1
EXTENSION AND REPAIR OF
SCHOOL STREET ON-RAMP RETAINING WALL
Project No. HII-01-08

Scale: As Noted — Date: Feb., 2009

FED. ROAD DIST. NO.	STATE	PROJ. NO.	FISCAL YEAR	SHEET NO.	TOTAL SHEETS
HAWAII	HAW.	H11-01-08	2009	C.O. 33	73

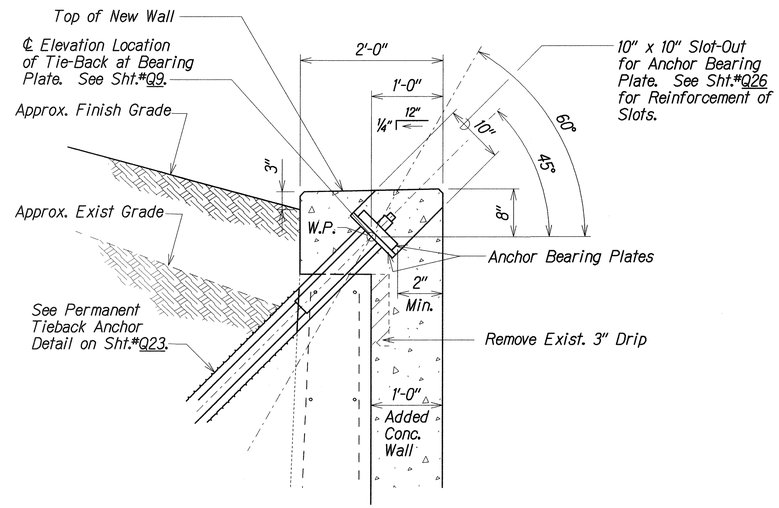

Walls A to G

DETAIL 1 (Q13 | Q25)
Scale: 1"=1'-0"
Q11, Q12

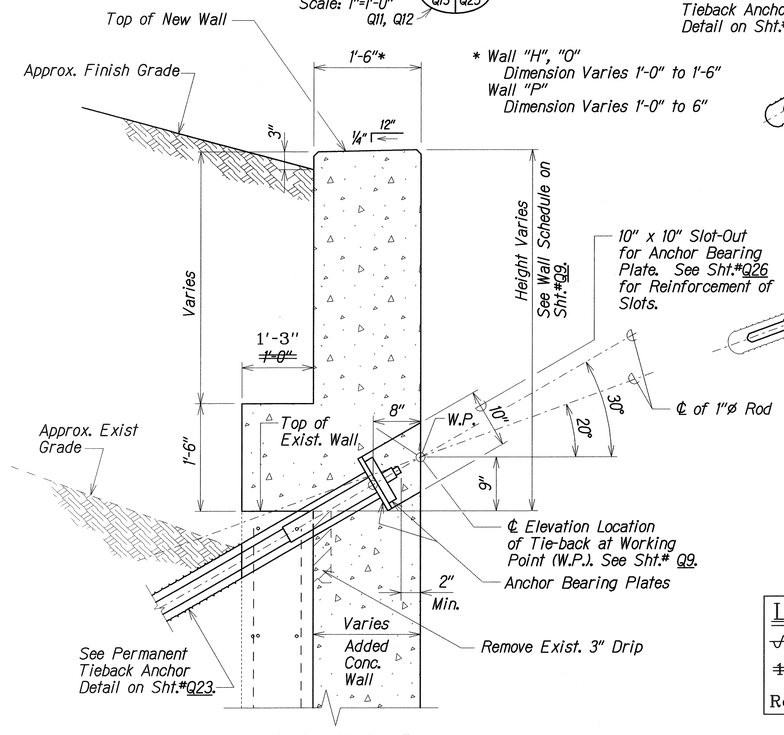

Walls H to P

DETAIL 2 (Q22 | Q25)
Scale: 1"=1'-0"
Q17, Q19, Q20, Q25A

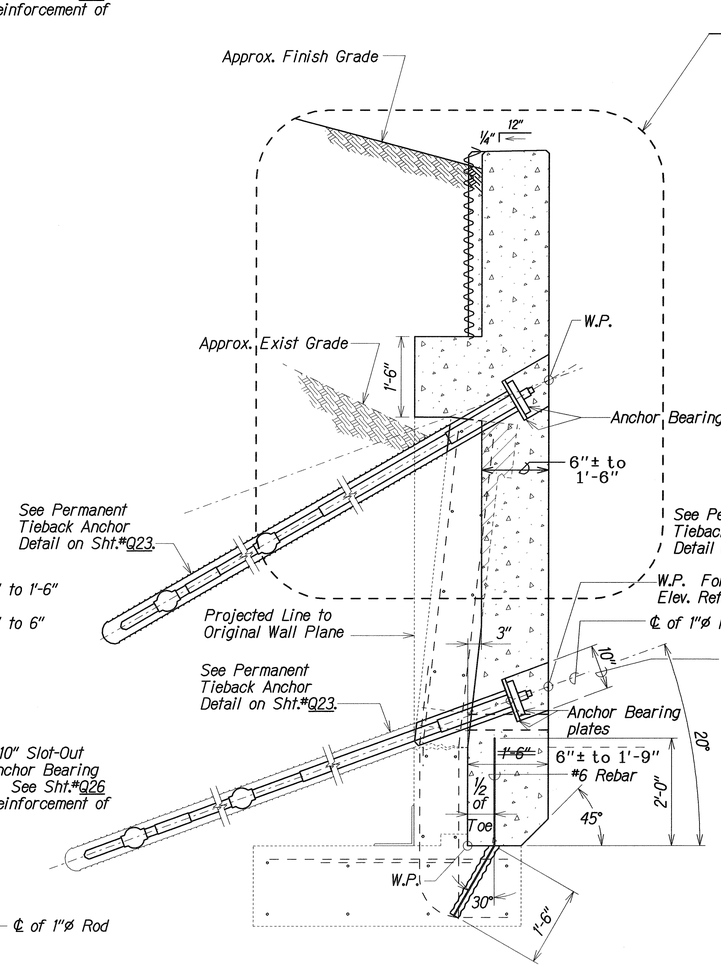

Distressed Walls H to P

TYPICAL WALL SECTION AT DISTRESSED WALL
Scale: ¾"=1'-0"

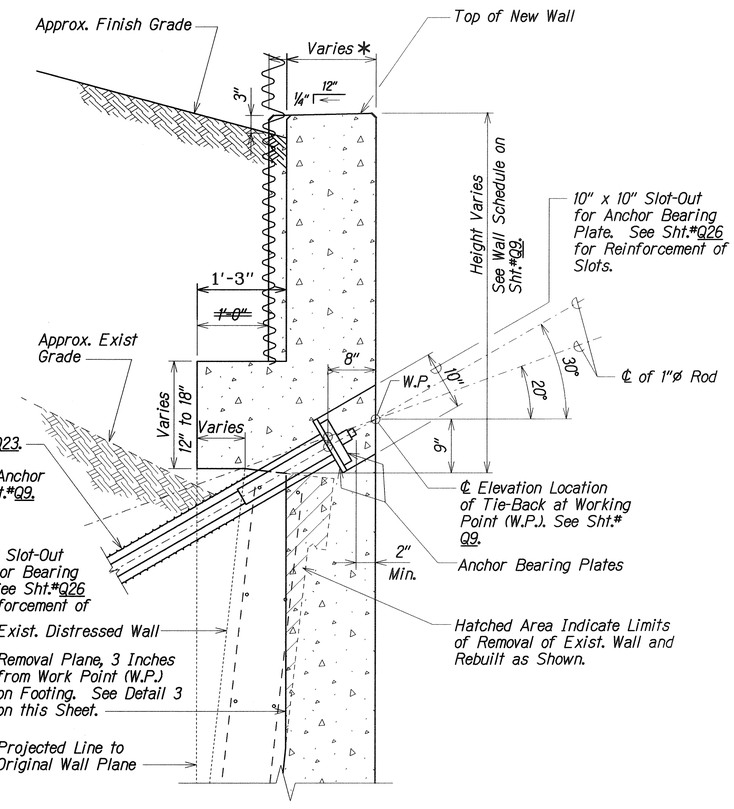

Distressed Walls H to P

DETAIL 3 (Q25 | Q25)
Scale: 1"=1'-0"

LEGEND FOR AS-BUILT POSTINGS	
~~	Squiggly line for as-built deletion
~~100.00~~	Double line for as-built deletion
Roadway	Text for as-built posting

NOTES:

1. After Anchors have been Proof Tested and Lockoff Loads Applied. Reinforce Slot and Seal with Concrete, similar in Strength and Texture to Added Wall Concrete. Appearance shall be acceptable to the Engineer with no tell tales of Slot-Outs.
2. For Distressed Walls K, L & M, Refer Sht.#Q25A. △1
3. * See Det. 2 (Q22 | Q25) for diamensions.

TIEBACK ANCHOR PLACEMENT DETAILS

DATE	REVISION
△1 8/17/09	Added Note No. 2 for Walls K, L & M. Added Sheet Number to Section Symbol

STATE OF HAWAII
DEPARTMENT OF TRANSPORTATION
HIGHWAYS DIVISION

RETAINING WALL REPAIR
TIEBACK ANCHOR PLACEMENT DETAIL
INTERSTATE ROUTE H-1, EXTENSION AND
REPAIR OF SCHOOL STREET ON-RAMP RETAINING WALL
Project No. H11-01-08

Scale: As Noted — Date: Feb. 2009

SHEET No. Q25 OF 34 SHEETS

ORIGINAL PLAN	SURVEY PLOTTED BY	XXX	DATE
	DRAWN BY	XXX	XXX 2009
NOTE BOOK	TRACED BY	XXX	XXX 2009
	DESIGNED BY	XXX	XXX 2009
N:\Hth\q25.dgn	QUANTITIES BY	XXX	XXX 2009
	CHECKED BY	XXX	XXX 2009

"AS-BUILT"

C.O. 33

FED. ROAD DIST. NO.	STATE	PROJ. NO.	FISCAL YEAR	SHEET NO.	TOTAL SHEETS
HAWAII	HAW.	HII-01-08	2009		73

C.O. ADD. 33 S-1

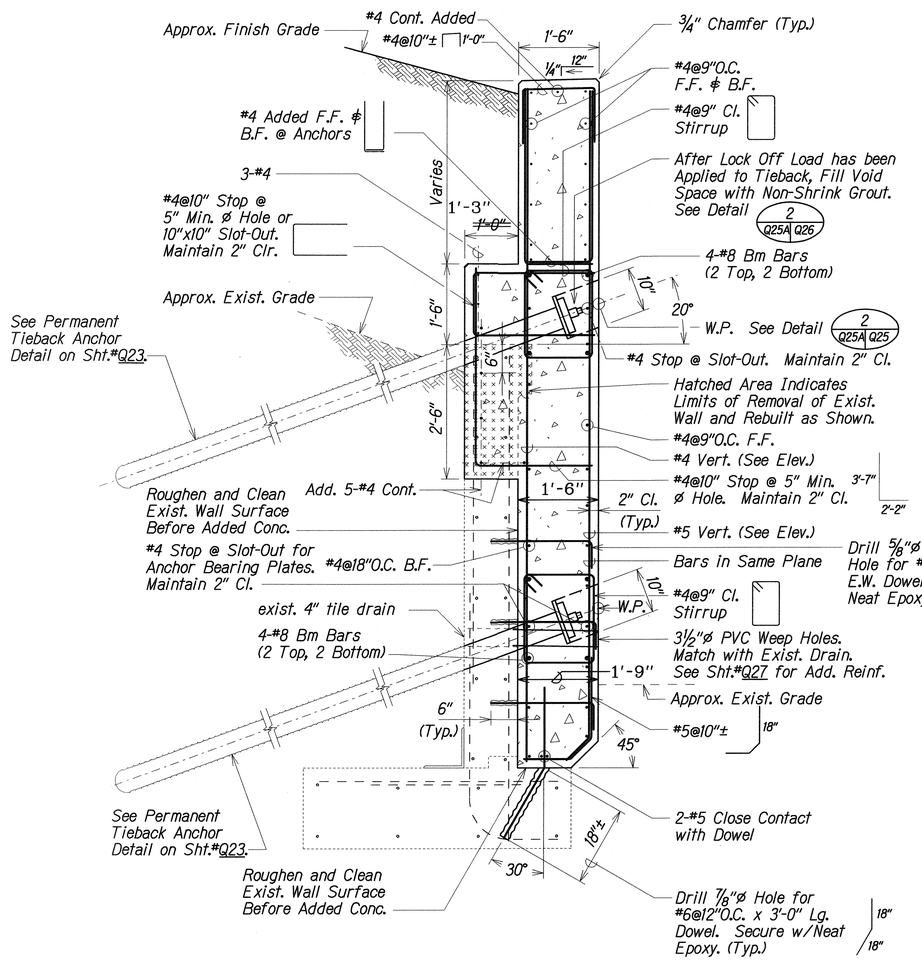

SECTION F Q19 Q25A G Q20 Q25A

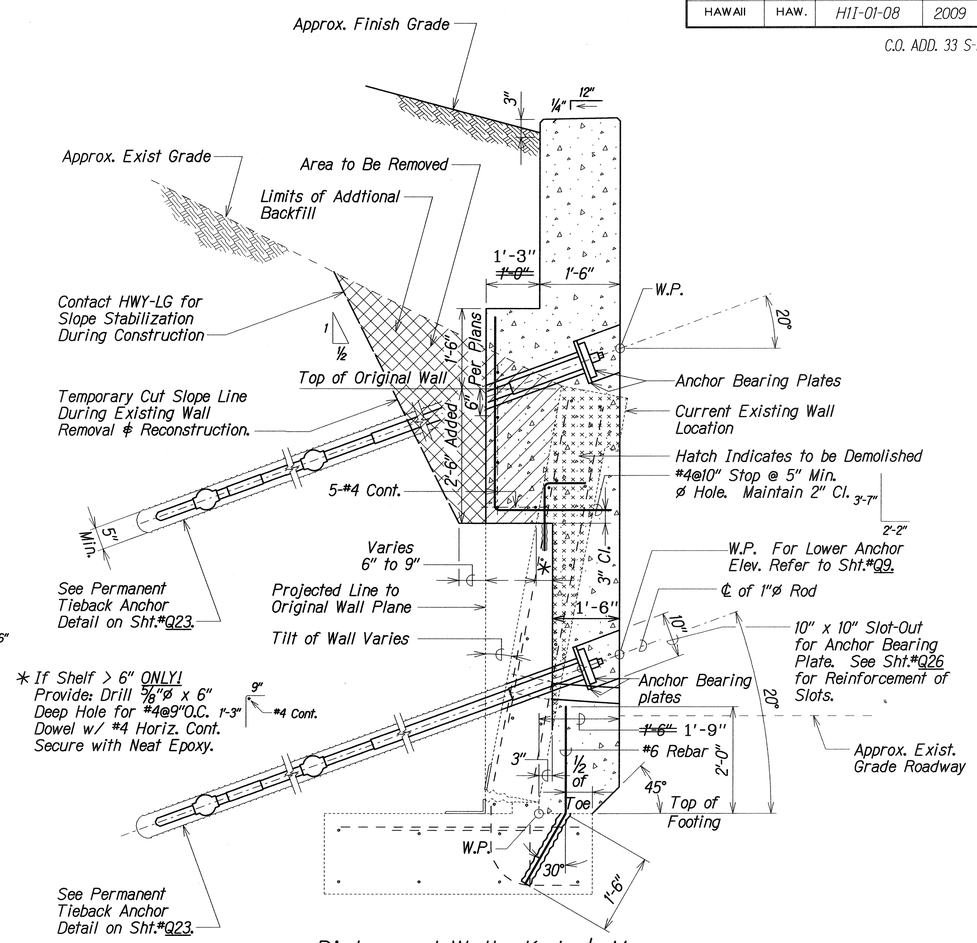

Distressed Walls K, L & M

TYPICAL WALL SECTION AT DISTRESSED WALL

NOTES:

1. For Wall "M" Reinforcements, See Sht.#Q19.
2. For Walls "K" & "L" Reinforcements, See Sht.#Q20.

Legend

- Limits of Excavation
- Demolition
- Limits of Backfill

LEGEND FOR AS-BUILT POSTINGS	
∿∿∿	Squiggly line for as-built deletion
~~100.00~~	Double line for as-built deletion
Roadway	Text for as-built posting

WALLS "K", "L" AND "M" SECTIONS 1

Scale: 3/4"=1'-0"

ORIGINAL PLAN	SURVEY PLOTTED BY	XXX	DATE	XXX 2009
	DRAWN BY			
NOTE BOOK	TRACED BY	XXX		XXX 2009
	DESIGNED BY	XXX		XXX 2009
	QUANTITIES BY	XXX		XXX 2009
	CHECKED BY	XXX		XXX 2009

DATE	REVISION
1 8/17/09	This Sheet was Added as a Change Order

STATE OF HAWAII
DEPARTMENT OF TRANSPORTATION
HIGHWAYS DIVISION

RETAINING WALL REPAIR
WALLS "K", "L" AND "M" SECTIONS
INTERSTATE ROUTE H-1
EXTENSION AND REPAIR OF
SCHOOL STREET ON-RAMP RETAINING WALL
Project No. HII-01-08

Scale: As Noted — Date: Feb., 2009

SHEET No. Q25A OF 34 SHEETS

"AS-BUILT"

C.O. ADD. 33 S-1

FED. ROAD DIST. NO.	STATE	PROJ. NO.	FISCAL YEAR	SHEET NO.	TOTAL SHEETS
HAWAII	HAW.	H11-01-08	2009	ADD. 34	73

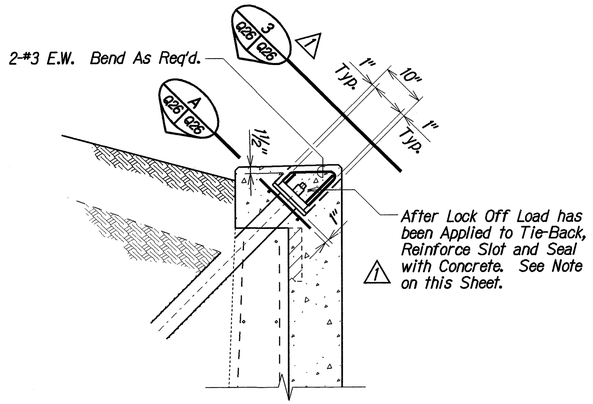

WALLS "A" to "G"

DETAIL 1 (Q13 | Q26)
Scale: ¾"=1'-0"
Q11, Q12

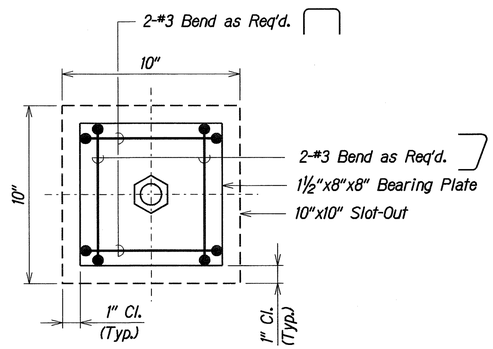

DETAIL 3 (Q26 | Q26)
Scale: 3"=1'-0"

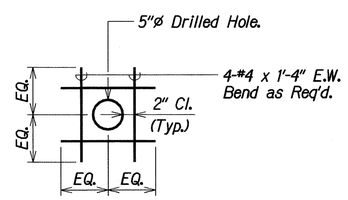

SECTION A (Q26 | Q26)
Scale: 1"=1'-0"

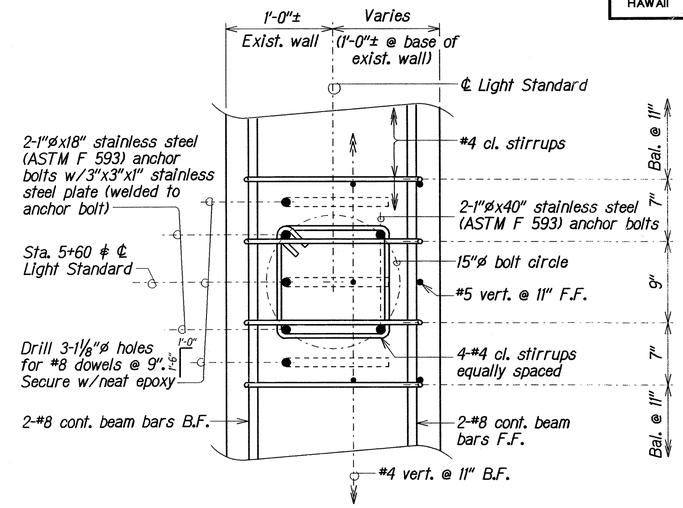

PLAN

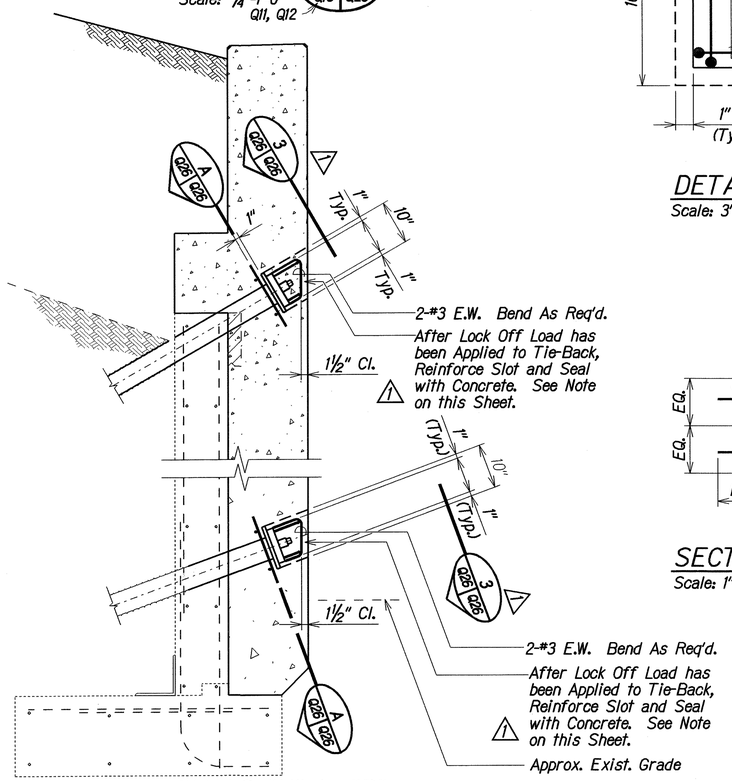

WALLS "H" to "P"

DETAIL 2 (Q22 | Q26)
Scale: ¾"=1'-0"
Q17, Q19, Q20

Note:
No Lower Anchors for Wall "P".

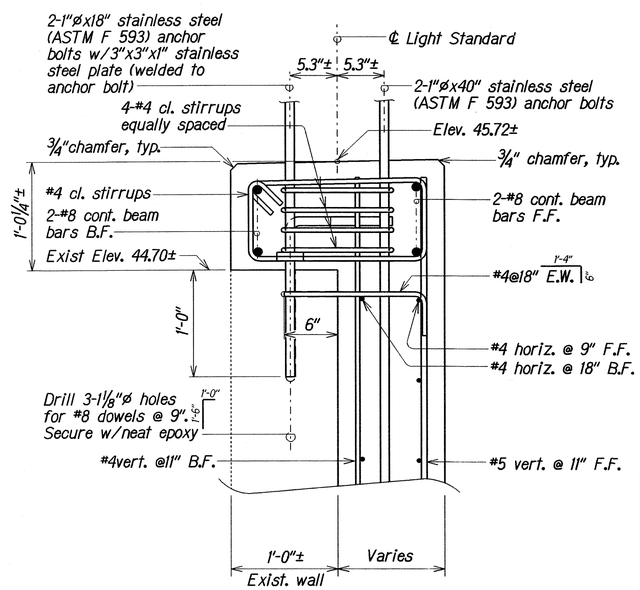

NOTE: For wall reinforcing not shown here, see Sht. #Q13

TYPICAL SECTION

LIGHT STANDARD CONCRETE SEAT on WALL "A" at RAMP 7 STA. 5+60
Scale: 1½" = 1'-0"

SLOT-OUT DETAILS FOR TIEBACK ANCHORS

3/31/09	Added Light Standard Details @ Sta. 5+60, Detail Symbols ∉ Detail Sheet Numbers, Revised Callouts ∉ Detail Designation, Rearranged Slot-Out Details for Tieback Anchors
DATE	REVISION

STATE OF HAWAII
DEPARTMENT OF TRANSPORTATION
HIGHWAYS DIVISION

RETAINING WALL REPAIR
SLOT-OUT DETAILS FOR TIEBACK ANCHOR AND LIGHT STD @ STA. 5+60 DETAILS
INTE[illegible] ROUTE H-1
EXTEN[illegible] REPAIR OF
SCHOOL STREET OV[illegible]P RETAINING WALL
Project No. H11-01-08

Scale: As Noted
Date: Feb. 2009

SHEET No. Q26 OF 34 SHEETS

ORIGINAL PLAN	SURVEY PLOTTED BY	XXX	DATE XXX 2009
	DRAWN BY		
	TRACED BY	XXX	XXX 2009
	DESIGNED BY	XXX	XXX 2009
NOTE BOOK	QUANTITIES BY	XXX	XXX 2009
	CHECKED BY	XXX	XXX 2009

Jobfile27.dgn

ADD. 34

FED. ROAD DIST. NO.	STATE	PROJ. NO.	FISCAL YEAR	SHEET NO.	TOTAL SHEETS
HAWAII	HAW.	HII-01-08	2009	ADD. 35	73

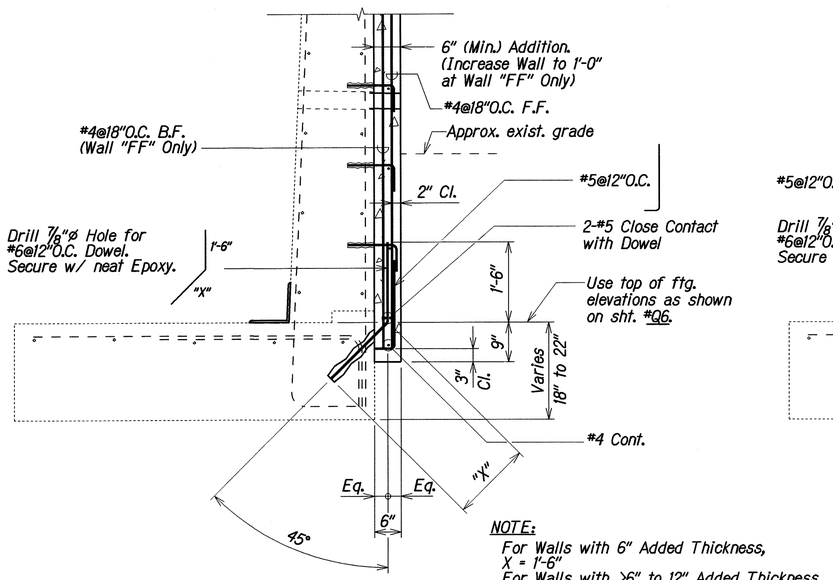

NOTE:
For Walls with 6" Added Thickness, X = 1'-6"
For Walls with >6" to 12" Added Thickness, X = 1'-9" (Wall "FF")

TYPE I
Walls "AA" to "FF"

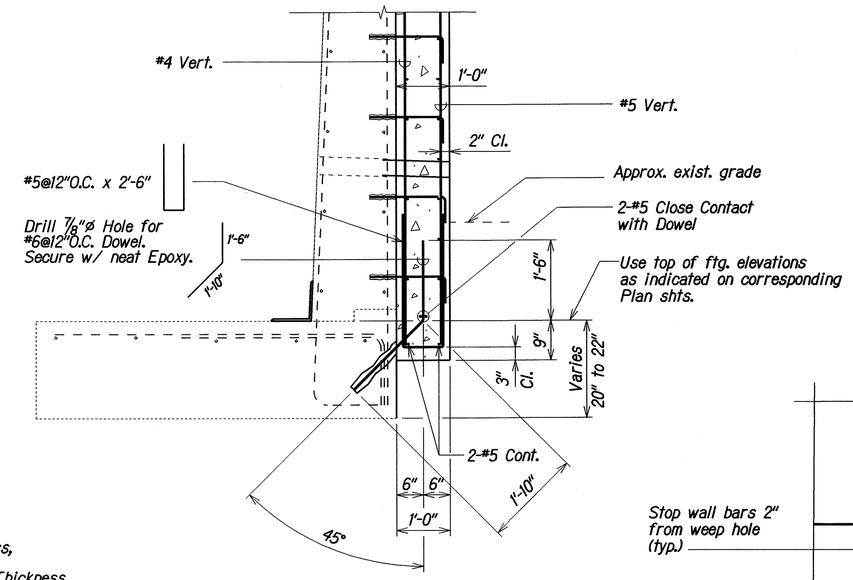

TYPE II
Wall "GG" & Walls "A" to "F"

ALTERNATE FOOTING DOWEL PLACEMENT DETAILS FOR NO FOOTING TOE
Scale: 3/4"=1'-0"

NOTE: See sht. #Q6 for limits.

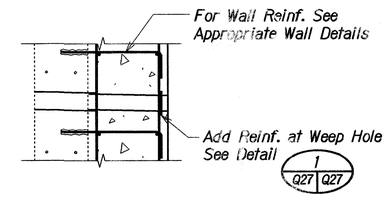

TYPICAL SECTION at WEEP HOLE
Scale: 3/4"=1'-0"

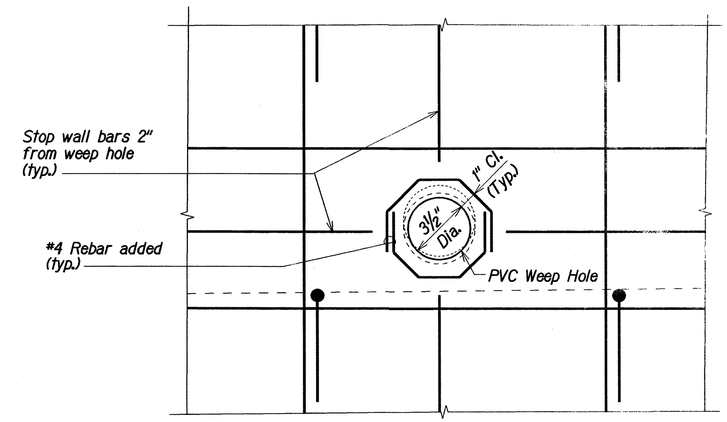

DETAIL 1 Q27 Q27
Scale: 3"=1'-0"

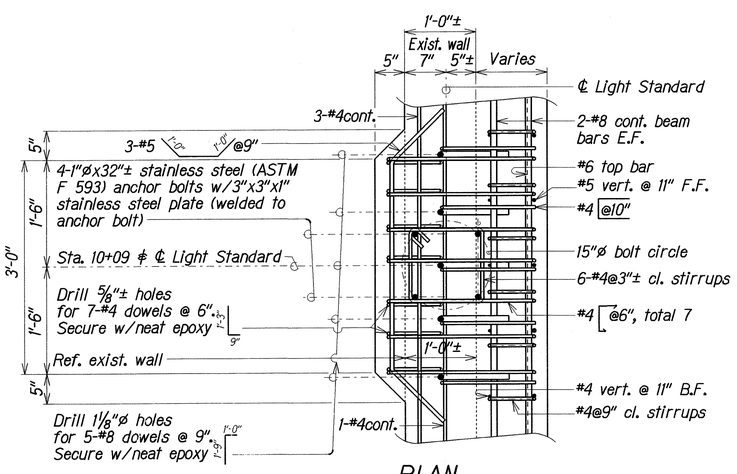

PLAN

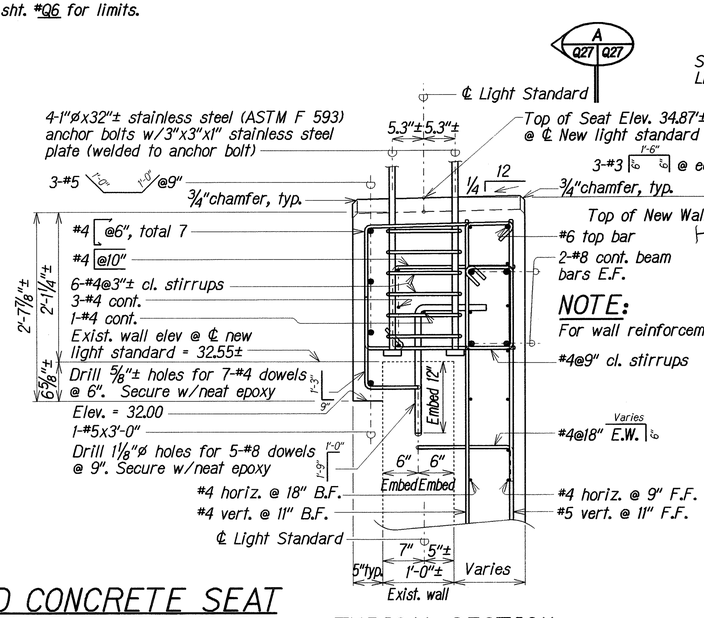

TYPICAL SECTION

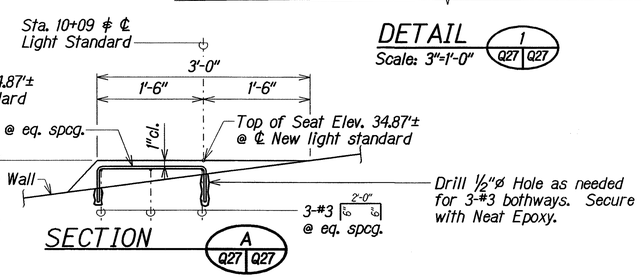

SECTION

NOTE:
For wall reinforcement not shown here, see Sht#Q21 & Q22

⚠ LIGHT STANDARD CONCRETE SEAT on WALL "P" at RAMP 7 STA. 10+09
Scale: 1" = 1'-0"

DATE	REVISION
⚠ 3/31/09	Added Light Standard Concrete Seat on Wall "P" at Ramp 7 Sta. 10+09 Details

STATE OF HAWAII
DEPARTMENT OF TRANSPORTATION
HIGHWAYS DIVISION

RETAINING WALL REPAIR
ALTERNATE FOOTING DOWEL PLACEMENT, WEEP HOLE AND LIGHT STD. @ STA. 10+09 DETAILS
INTERSTATE ROUTE H-1
EXTENSION AND REPAIR OF
SCHOOL STREET RAMP RETAINING WALL

Scale: As Noted | Project No. HII-01-08 | Date: Feb. 2009

SHEET No. Q27 OF 34 SHEETS

ORIGINAL PLAN	SURVEY PLOTTED BY	XXX	DATE
	DRAWN BY	XXX	XXX 2008
NOTE BOOK	TRACED BY	XXX	XXX 2008
	DESIGNED BY	XXX	XXX 2008
	QUANTITIES BY	XXX	XXX 2008
N/A	CHECKED BY	XXX	XXX 2008

ADD. 35

FED. ROAD DIST. NO.	STATE	PROJ. NO.	FISCAL YEAR	SHEET NO.	TOTAL SHEETS
HAWAII	HAW.	HII-01-08	2009	ADD. 36	73

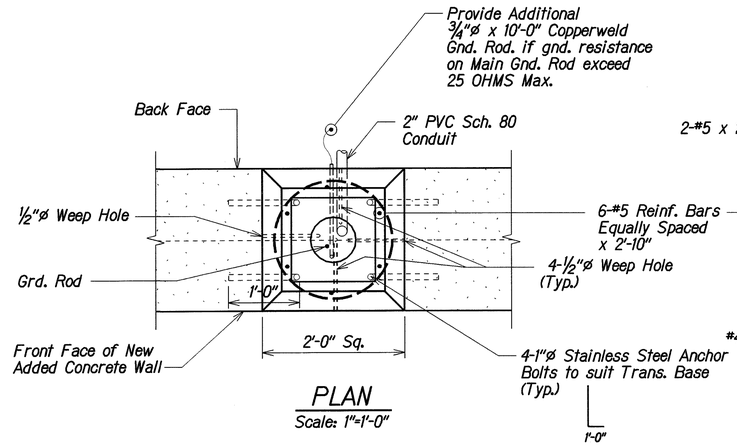

PLAN
Scale: 1"=1'-0"

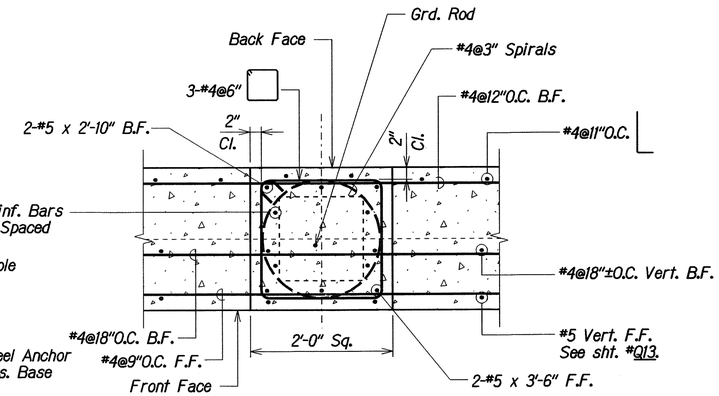

SECTION A Q28 Q28
Scale: 1"=1'-0"

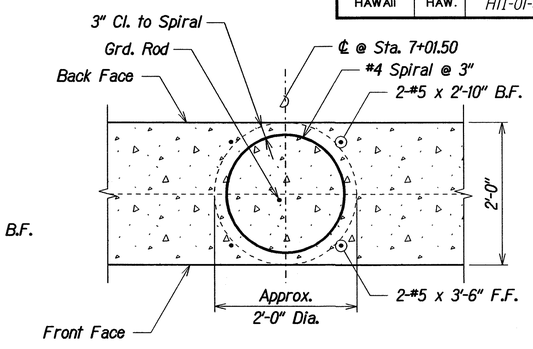

SECTION B Q28 Q28
Scale: 1"=1'-0"

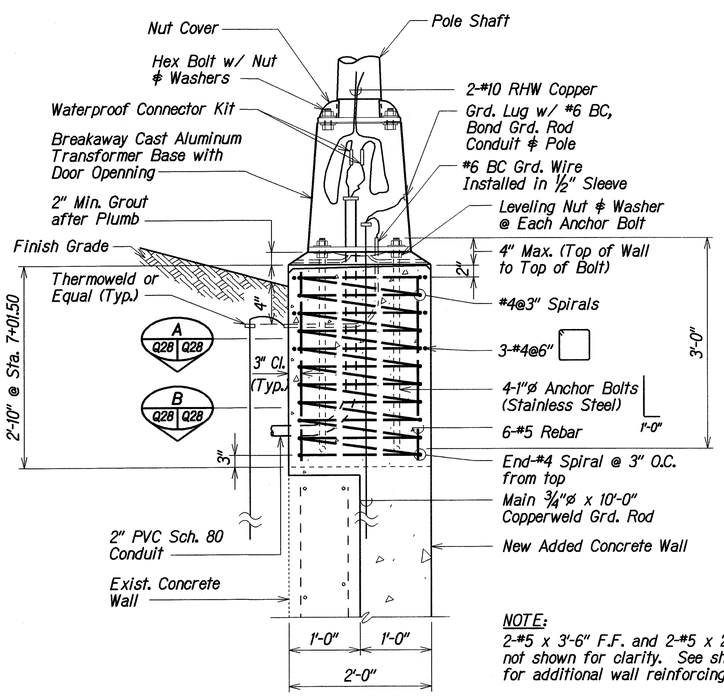

NOTE:
2-#5 x 3'-6" F.F. and 2-#5 x 2'-10" B.F. not shown for clarity. See sht. #Q13 for additional wall reinforcing.

ELEVATION
Scale: 1"=1'-0"

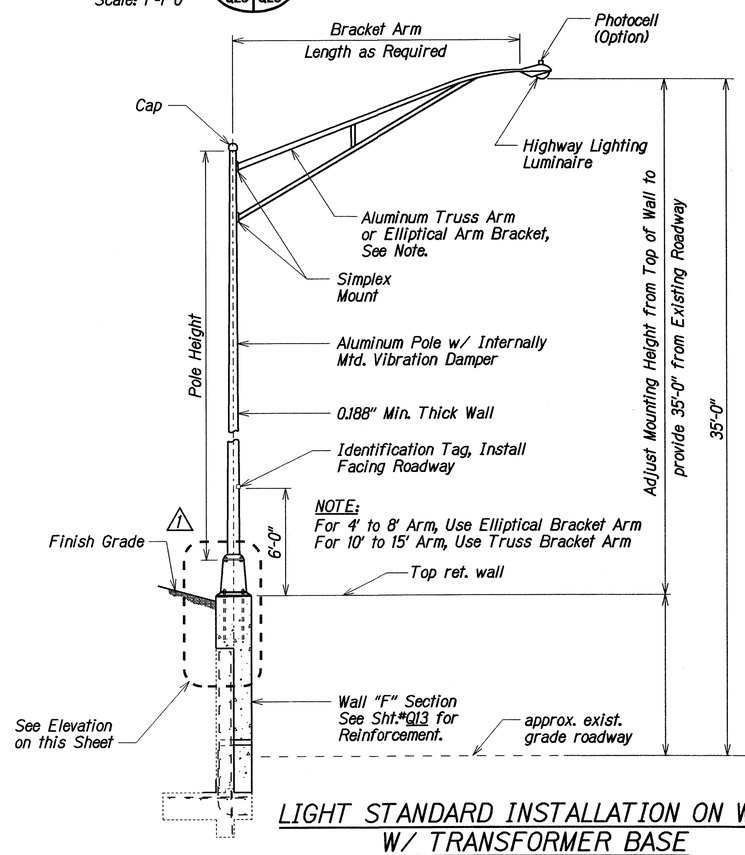

LIGHT STANDARD INSTALLATION ON WALL W/ TRANSFORMER BASE
Scale: ¼"=1'-0"

NOTES:

1. Design of Light Standard & Foundation Shall Conform to Latest AASHTO "Standard Specifications for Structural Supports for Highway Signs, Luminaires and Traffic Signals", subsequent interims, and latest HDOT Memorandum with subject title "Design Criteria for Bridges and Structures".
2. See B-01 for Additional Notes.

DATE	REVISION
3/31/09	Removed Dimension

STATE OF HAWAII
DEPARTMENT OF TRANSPORTATION
HIGHWAYS DIVISION

RETAINING WALL REPAIR
LIGHT STANDARD DETAIL @ STA. 7+01.50
INTERSTATE ROUTE H-1
EXTENSION AND REPAIR OF
SCHOOL STREET ON-RAMP RETAINING WALL
Project No. HII-01-08

Scale: As Noted — Date: Feb. 2009

SHEET No. Q28 OF 34 SHEETS

ORIGINAL PLAN		DATE
SURVEY PLOTTED BY	XXX	XXX 2009
DRAWN BY		
TRACED BY	XXX	XXX 2009
DESIGNED BY	XXX	XXX 2009
QUANTITIES BY	XXX	XXX 2009
CHECKED BY	XXX	XXX 2009
NOTE BOOK		

LIGHT STANDARD DETAILS
@ WALL "F" STA. 7+01.50

ADD. 36

FED. ROAD DIST. NO.	STATE	FED. AID PROJ. NO.	FISCAL YEAR	SHEET NO.	TOTAL SHEETS
HAWAII	HAW.	HII-01-08	2009	37	73

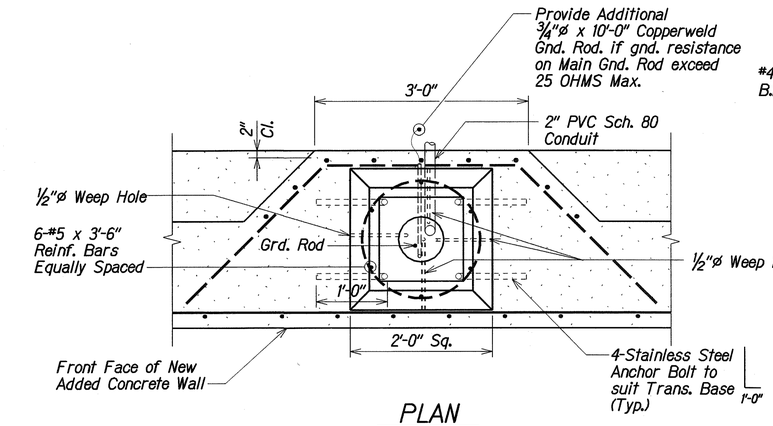

PLAN
Scale: 1"=1'-0"

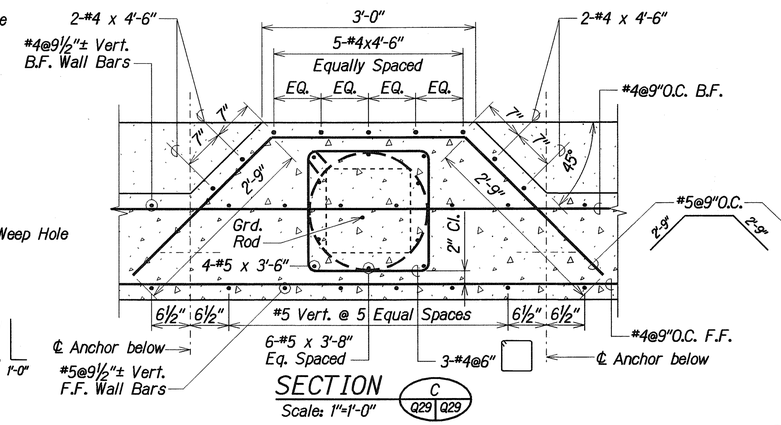

SECTION C Q29 Q29
Scale: 1"=1'-0"

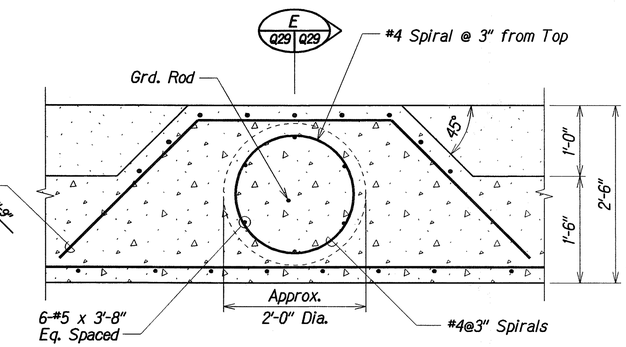

SECTION D Q29 Q29
Scale: 1"=1'-0"

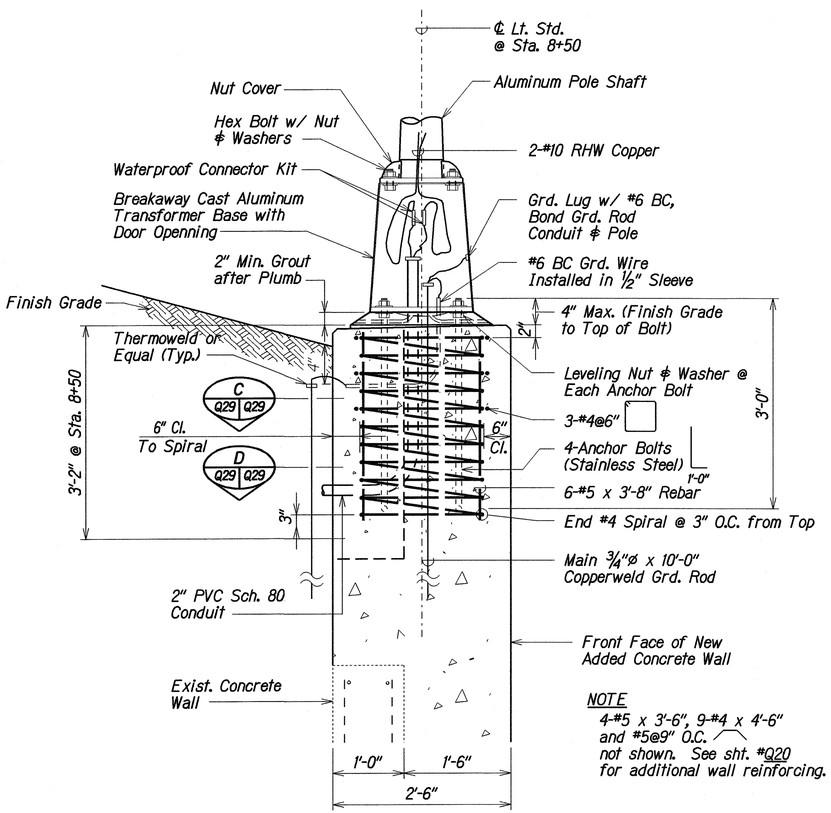

NOTE
4-#5 x 3'-6", 9-#4 x 4'-6" and #5@9" O.C. not shown. See sht. #Q20 for additional wall reinforcing.

ELEVATION
Scale: 1"=1'-0"

LIGHT STANDARD DETAILS
@ WALL "K" STA. 8+50

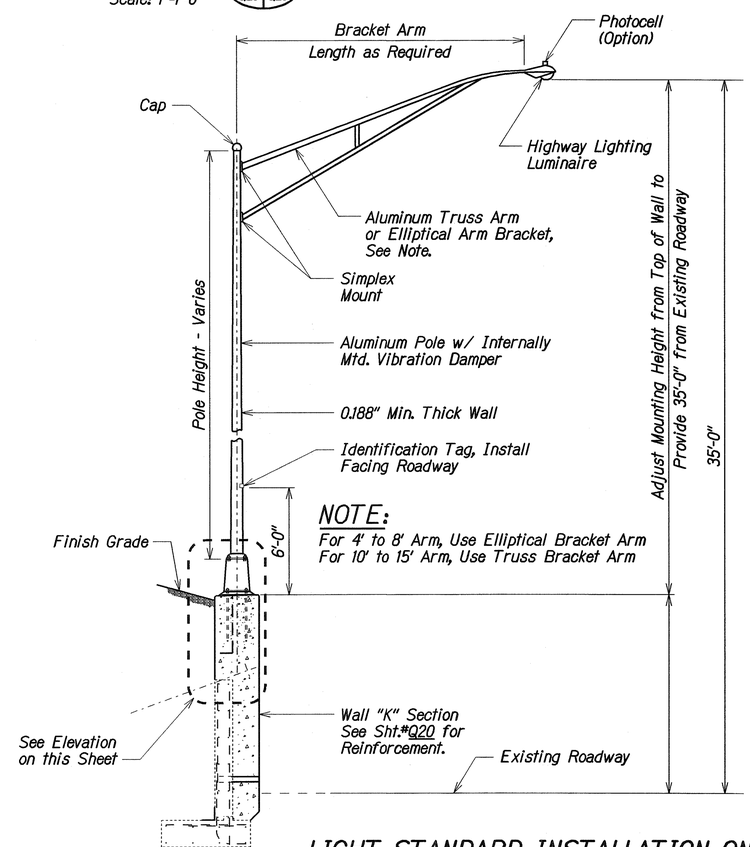

NOTE:
For 4' to 8' Arm, Use Elliptical Bracket Arm
For 10' to 15' Arm, Use Truss Bracket Arm

LIGHT STANDARD INSTALLATION ON WALL
W/ TRANSFORMER BASE
Scale: ¼"=1'-0"

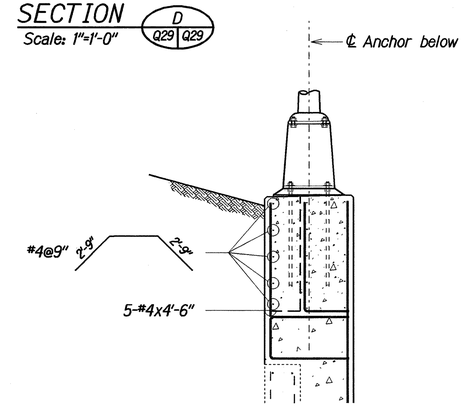

SECTION E Q29 Q29
Scale: ½"=1'-0"

NOTES:

1. Design of Light Standard & Foundation Shall Conform to Latest AASHTO "Standard Specifications for Structural Supports for Highway Signs, Luminaires and Traffic Signals", subsequent interims, and latest HDOT Memorandum with subject title "Design Criteria for Bridges d Structures".
2. See B-01 for Additional Notes.

ORIGINAL PLAN	SURVEY PLOTTED BY	XXX	DATE XXX 2008
	DRAWN BY		
	TRACED BY	XXX	XXX 2008
NOTE BOOK	DESIGNED BY	XXX	XXX 2008
	QUANTITIES BY	XXX	XXX 2008
	CHECKED BY	XXX	XXX 2008

N:\dft\bg29.dgn

STATE OF HAWAII
DEPARTMENT OF TRANSPORTATION
HIGHWAYS DIVISION

RETAINING WALL EXTENSION
LIGHT STANDARD DETAILS at STA. 8+50
INTERSTATE ROUTE H-1
EXTENSION AND REPAIR OF
SCHOOL STREET ON-RAMP RETAINING WALL
Project No. HII-01-08

Scale: As Noted — Date: Feb., 2009

SHEET No. Q29 OF 34 SHEETS

FED. ROAD DIST. NO.	STATE	PROJ. NO.	FISCAL YEAR	SHEET NO.	TOTAL SHEETS
HAWAII	HAW.	H11-01-08	2009	ADD. 38	73

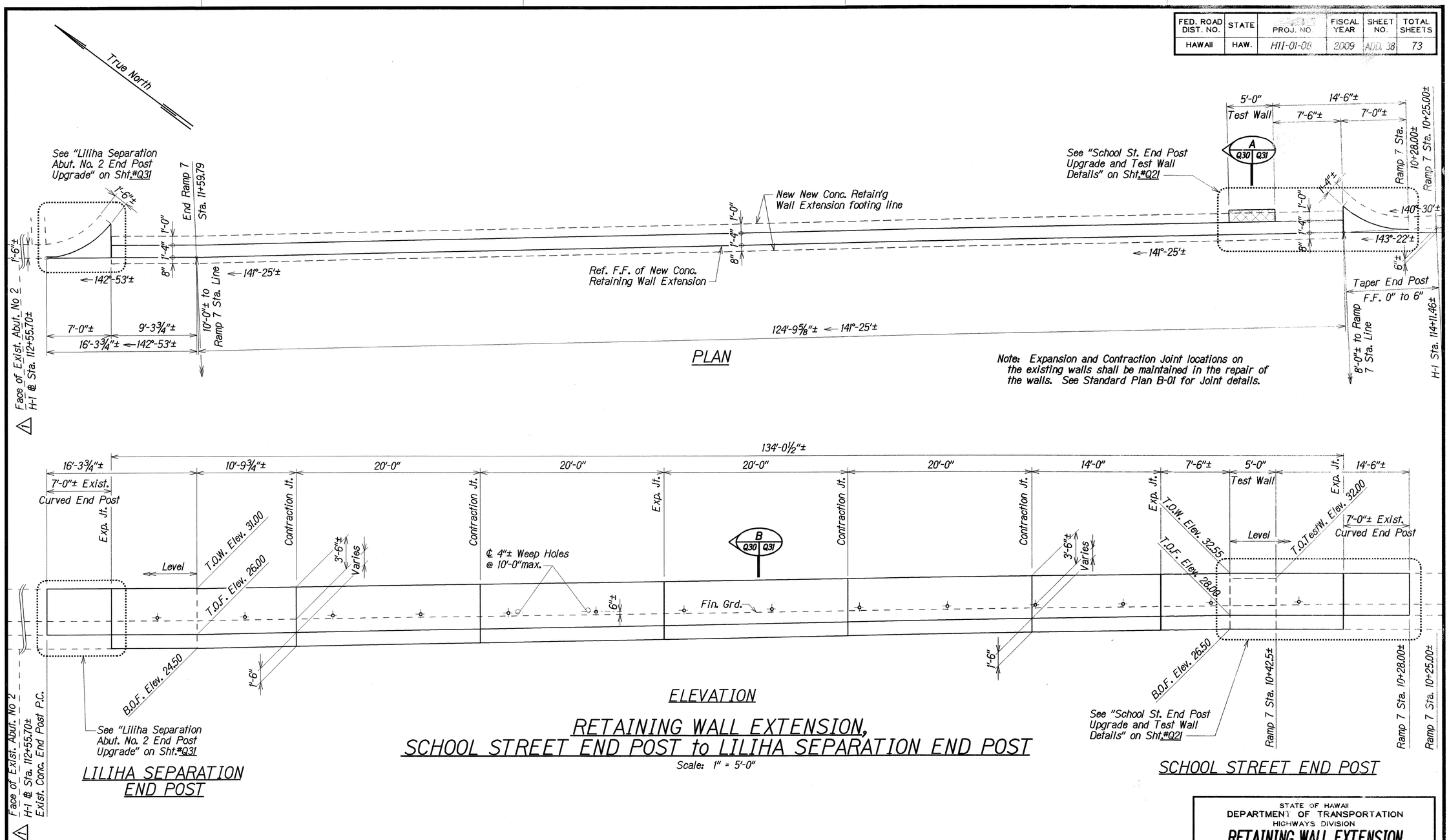

RETAINING WALL EXTENSION, SCHOOL STREET END POST to LILIHA SEPARATION END POST

Scale: 1" = 5'-0"

ORIGINAL PLAN	SURVEY PLOTTED BY XXX	DRAWN BY XXX	TRACED BY XXX	DESIGNED BY XXX	QUANTITIES BY XXX	CHECKED BY XXX	DATE XXX 1997	XXX 1997	XXX 1997	XXX 1997
NOTE BOOK										
No. XXXXXXX										

DATE	REVISION
1 3/31/09	Revised Face of Exist. Abut. No. 2 Station Number

STATE OF HAWAII
DEPARTMENT OF TRANSPORTATION
HIGHWAYS DIVISION

RETAINING WALL EXTENSION

SCHOOL STREET END POST to LILIHA SEPARATION END POST PLAN and ELEVATION

INTERSTATE ROUTE H-1 EXTENSION and REPAIR of SCHOOL STREET ON RAMP RETAINING WALL

Project No. H11-01-08

Scale: As Noted Date: Feb. 2009

SHEET No. Q30 OF 34 SHEETS

ADD. 38

FED. ROAD DIST. NO.	STATE	PROJ. NO.	FISCAL YEAR	SHEET NO.	TOTAL SHEETS
HAWAII	HAW.	HII-01-08M	2009	ADD. 39	73

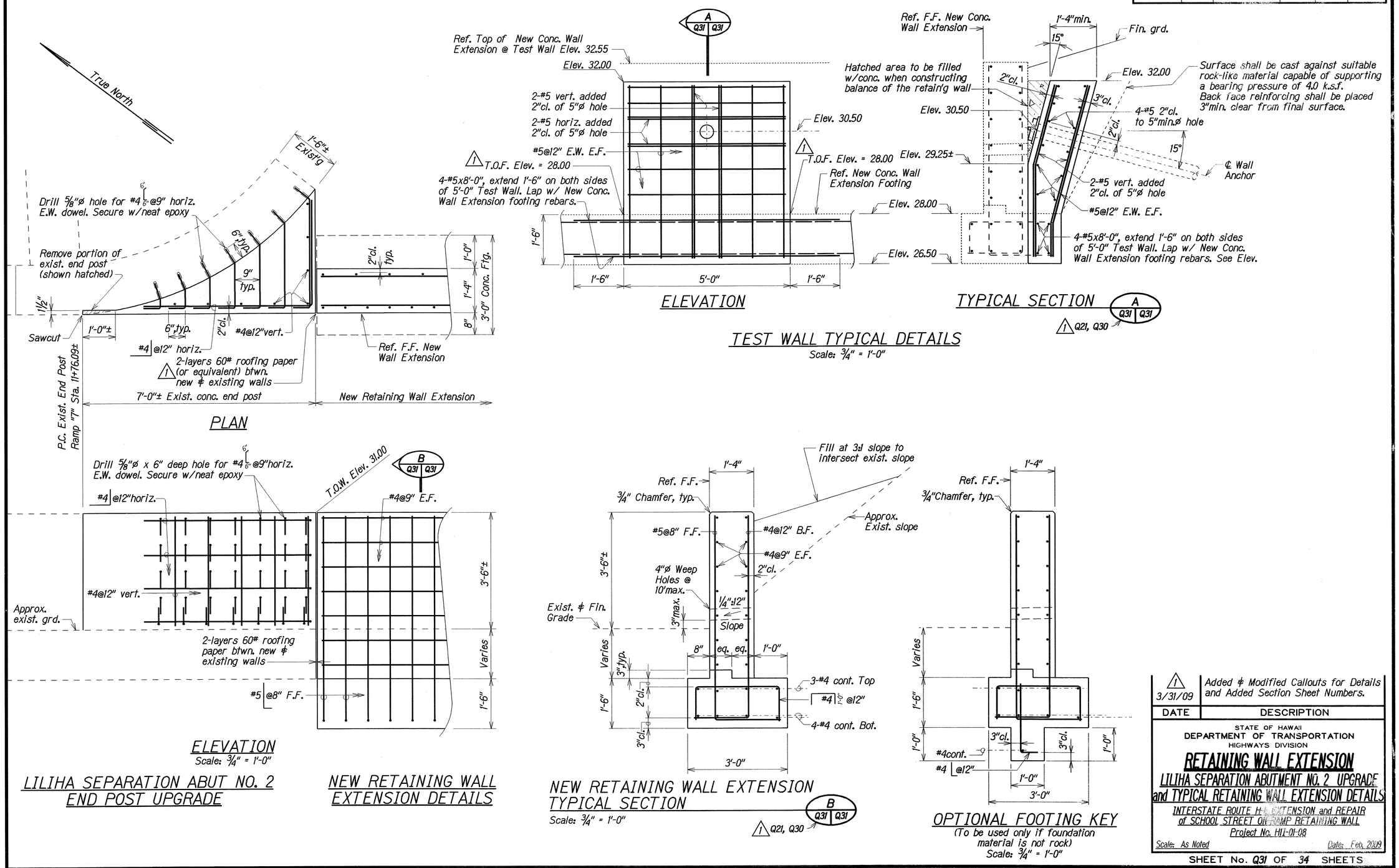

ORIGINAL PLAN			
SURVEY PLOTTED BY	XXX	DATE	XXX 1991
DRAWN BY	XXX		
TRACED BY	XXX		XXX 1991
NOTE BOOK	DESIGNED BY	XXX	XXX 1991
	QUANTITIES BY	XXX	XXX 1991
No. XXXXXXXX	CHECKED BY	XXX	XXX 1991

1 3/31/09	Added & Modified Callouts for Details and Added Section Sheet Numbers.
DATE	DESCRIPTION

STATE OF HAWAII
DEPARTMENT OF TRANSPORTATION
HIGHWAYS DIVISION

RETAINING WALL EXTENSION

LILIHA SEPARATION ABUTMENT NO. 2 UPGRADE and TYPICAL RETAINING WALL EXTENSION DETAILS

INTERSTATE ROUTE H-1 EXTENSION and REPAIR of SCHOOL STREET ON-RAMP RETAINING WALL

Project No. HII-01-08

Scale: As Noted — Date: Feb. 2009

SHEET No. Q31 OF 34 SHEETS

ADD. 39

FED. ROAD DIST. NO.	STATE	PROJ. NO.	FISCAL YEAR	SHEET NO.	TOTAL SHEETS
HAWAII	HAW.	HII-01-08	2009	ADD. 40	73

UNIFIED SOIL CLASSIFICATION SYSTEM (USCS)

MAJOR DIVISIONS			USCS	TYPICAL DESCRIPTIONS
COURSE GRAINED SOILS	GRAVELS	CLEAN GRAVELS LESS THAN 5% FINES	GW	WELL-GRADED GRAVELS, GRAVEL-SAND MIXTURES, LITTLE OR NO FINES
	MORE THAN 50% OF COURSE FRACTION RETAINED ON NO. 4 SIEVE		GP	POORLY-GRADED GRAVELS, GRAVEL-SAND MIXTURES, LITTLE OR NO FINES
		GRAVELS WITH FINES MORE THAN 12% FINES	GM	SILTY GRAVELS, GRAVEL-SAND-SILT MIXTURES
			GC	CLAYEY GRAVELS, GRAVEL-SAND-CLAY MIXTURES
MORE THAN 50% OF MATERIAL RETAINED ON NO. 200 SIEVE	SANDS	CLEAN SANDS LESS THAN 5% FINES	SW	WELL-GRADED SANDS, GRAVELLY SANDS, LITTLE OR NO FINES
	50% OR MORE OF COURSE FRACTION PASSING THROUGH NO. 4 SIEVE		SP	POORLY-GRADED SANDS, GRAVELLY SANDS, LITTLE OR NO FINES
		SANDS WITH FINES MORE THAN 12% FINES	SM	SILTY SANDS, SAND-SILT MIXTURES
			SC	CLAYEY SANDS, SAND-CLAY MIXTURES
FINE-GRAINED SOILS	SILTS AND CLAYS	LIQUID LIMIT LESS THAN 50	ML	INORGANIC SILTS AND VERY FINE SANDS, ROCK FLOUR, SILTY OR CLAYEY FINE SNDS OR CLAYEY SILTS WITH SLIGHT PLASTICITY
			CL	INORGANIC CLAYS OF LOW TO MEDIUM PLASTICITY, GRAVELLY CLAYS, SANDY CLAYS, SILTY CLAYS, LEAN CLAYS
			OL	ORGANIC SILTS AND ORGANIC SILTY CLAYS OF LOW PLASTICITY
50% OR MORE OF MATERIAL PASSING THROUGH NO. 200 SIEVE	SILTS AND CLAYS	LIQUID LIMIT 50 OR MORE	MH	INORGANIC SILT, MICACEOUS OR DIATOMACEOUS FINE SAND OR SILTY SOILS
			CH	INORGANIC CLAYS OF HIGH PLASTICITY
			OH	ORGANIC CLAYS OF MEDIUM TO HIGH PLASTICITY, ORGANIC SILTS
HIGHLY ORGANIC SOILS			PT	PEAT, HUMUS, SWAMP SOILS WITH HIGH ORGANIC CONTENTS

NOTE: DUAL SYMBOLS ARE USED TO INDICATED BORDERLINE SOIL CLASSIFICATIONS

LEGEND

	(2-INCH) O.D. STANDARD PENETRATION TEST	LL	LIQUID LIMIT (NP=NON-PLASTIC)
	(3-INCH) O.D. MODIFIED CALIFORNIA SAMPLE	PI	PLASTICITY INDEX (NP=NON-PLASTIC)
S	SHELBY TUBE SAMPLE	TV	TORVANE SHEAR (tsf)
G	GRAB SAMPLE	PEN	POCKET PENETROMETER (tsf)
	CORE SAMPLE	UC	UNCONFINED COMPRESSION (psf)
	WATER LEVEL OBSERVED IN BORING	UU	UNCONSOLIDATED UNDRAINED TRIAXIAL COMPRESSION (ksf)

GEOTECHNICAL NOTES

1. A geotechnical engineering report entitled "Geotechnical Engineering Exploration of Retaining Wall Distress at School Street On-Ramp, Interstate Route H-1 Highway, Honolulu, Oahu, Hawaii", dated March 7, 2008, has been prepared by Geolabs, Inc. A copy of the report is on file at the office of the Engineer for review by the Contractor.
2. For boring locations, see Sht.#Q3 △1
3. The information presented in the logs of borings depict the subsurface conditions encountered at that specified location and at the time of the field exploration only. Variations of subsoil conditions from those depicted in the logs of borings may occur between and beyond the borings.
4. The penetration resistance shown on the logs of borings indicate the number of blows required for the specific sampler type used. The blow counts may need to be factored to obtain the Standard Penetration Test (SPT) blow counts.
5. The data given is for general information only. Bidders shall examine the site and the boring data and draw their own conclusions therefrom as to the character of materials to be encountered. The Engineer will not assume responsibility for variation of subsoil quality or conditions other than at the boring locations shown and at the time the borings were taken.

BORING 1

Depth (feet)	USCS	Description
0	GW	2-inch ASPHALTIC CONCRETE
		Dark gray SANDY GRAVEL, dense, dry (base course/fill)
5	CH	Grayish brown with orange mottling SILTY CLAY with sand and gravel, stiff, damp grades without sand and gravel at 5 feet grades to dark gray with white mottling at 7 feet grades with sand and gravel (basaltic), very hard
10		
15		Gray moderately visicular BASALT, closely to severely fractured, moderately weathered, hard (basalt formation) grades from moderately to severely fractured at 15.5 feet grades from moderately to closely fractured
20		
25		grades from slightly to closely fractured
30	CH	Reddish brown SILTY CLAY, stiff, damp
		Brown VOLCANIC TUFF, severely fractured, highly weathered, medium hard to soft (mudrock)
35		Brown BASALT, severely fractured, highly weathered, medium hard to soft (basalt formation)
40		grades with clay seams, moderately to highly weathered
45		grades to gray, moderately weathered, hard
50		
55		grades from moderately to closely fractured
		Boring terminated at 57 feet
60		*Elevations estimated from Topographic Map dated June 2006 transmitted by State DOT on April 26, 2007
65		
70		

BORING 2

Depth (feet)	USCS	Description
0	SM	Brown SILTY SAND, loose, dry (fill)
	CH	Brown and light gray CLAY with traces of gravel and sand (basaltic) and rootlets, stiff to very stiff, moist (fill)
5	CH	Gray with multi-color mottling SILTY CLAY with traces of fine sand and rootlets, very stiff, moist (fill)
		Gray vesicular BASALT, moderately to closely fractured, slightly to moderately weathered, hard (basalt formation) grades from moderately to severely fractured, slightly weathered at 9.5 feet grades from slightly to closely fractured
10		
15		
20		grades from moderately to closely fractured
25	GM	Orangish brown and gray SILTY GRAVEL (BASALTIC) with cobbles, dense, damp
30		Gray vesicular BASALT, moderately fractured, moderately weathered, medium hard (basalt formation) grades to severely fractured, moderately to highly weathered at 29.5 feet grades from closely to severely fractured at 34.5 feet
35		
40	CH	Gray with multi-colored mottling GRAVEL AND COBBLES (BASALTIC) moderately cemented, in a sandy silt matrix, dense, damp (highly weathered volcanic breccia/conglomerate)
45		
50		Gray dense BASALT, moderately fractured, slightly weathered, very hard (basalt formation) grades to massive at 51.5 feet
55		
60		Boring terminated at 59.5 feet
65		
70		

DATE	REVISION
△1 3/31/09	Revised Boring Location Sheet Number

STATE OF HAWAII
DEPARTMENT OF TRANSPORTATION
HIGHWAYS DIVISION

RETAINING WALL REPAIR and EXTENSION

UNIFIED SOIL CLASSIFICATION SYSTEM (USCS), GEOTECHNICAL NOTES & BORING LOGS

INTERSTATE ROUTE H-1 EXTENSION and REPAIR of SCHOOL STREET ON-RAMP RETAINING WALL

Project No. HII-01-08

Scale: As Noted — Date: Feb. 2009

SHEET No. Q32 OF 34 SHEETS

ORIGINAL PLANS	SURVEY PLOTTED BY XXX DATE XXX 1997
	DRAWN BY XXX DATE XXX 1997
NOTE BOOK	TRACED BY XXX DATE XXX 1997
	DESIGNED BY XXX DATE XXX 1997
	QUANTITIES BY XXX DATE XXX 1997
No. XXXXXXXX	CHECKED BY XXX DATE XXX 1997

ADD. 40

FED. ROAD DIST. NO.	STATE	FED. AID PROJ. NO.	FISCAL YEAR	SHEET NO.	TOTAL SHEETS
HAWAII	HAW.	HII-01-08	2009	41	73

BORING 3

Depth (feet)	Sample	Graphic	USCS	Description
0			GW	2-Inch ASPHALTIC CONCRETE
			GC	Brownish gray SANDY GRAVEL (BASALTIC) with silt, dense, dry
				Grayish brown with multi-color mottling CLAYEY GRAVEL (BASALTIC) with sand, dense, damp
5				Gray vesicular BASALT, closely fractured, slightly weathered, very hard (basalt formation)
10				grades with vertical fractures
15			MH	Reddish orange CLAYEY SILT with sand, very stiff, damp (old alluvium)
20			SC	Brown with multi-color mottling CLAYEY SAND (BASALTIC) with gravel, medium dense, damp (old allevium)
			CL	Reddish orange SANDY CLAY, very stiff, damp
25			SM	Brown with multi-color mottling SILTY SAND (BASALTIC) friable with gravel and cobbles
			SC	dense, damp
				Brown CLAYEY SAND with cobbles and gravel (basaltic), dense, damp
30				
35				Gray BASALT, closely to severely fractured, highly weathered, medium hard (basalt formation)
40				grades to closely fractured, moderately weathered, hard
				Gray dense BASALT, massive, unweathered, very hard (basalt formation)
45				
				Boring terminated at 47 feet
50				
55				
60				Boring terminated at 59.5 feet
65				
70				

BORING 4

Depth (feet)	Sample	Graphic	USCS	Description
0			GW	2-Inch ASPHALTIC CONCRETE
				5-Inch CONCRETE
				Brownish gray SANDY GRAVEL (BASALTIC) with cobbles and silt, dense, dry (base course)
5				Gray vesicular BASALT, slightly fractured, slightly weathered, very hard (basalt formation)
10				grades to dense, moderately fractured
15			MH	Bright orange CLAYEY SILT, medium stiff, damp (old alluvium)
20			SM	Orangish brown with multi-color mottling SILTY SAND, medium denst, damp (old alluvium)
25			SC	Dark grayish brown with multi-color mottling CLAYEY SAND (BASALTIC) with gravel, medium dense, damp to moist (old alluvium)
30				
35			GM	Dark brown with gray mottling SILTY GRAVEL (BASALTIC) highly weathered wiht sand and some clay, medium dense, damp to moist (saprolite)
40				Gray dense to vesicular BASALT, moderately fractured, moderately weathered, hard (basalt formation)
45				
50				Gray dense BASALT, massive, slightly weathered, very hard (basalt formation)
				Boring terminated at 50.5 feet
55				
60				
65				
70				

BORING 5

Depth (feet)	Sample	Graphic	USCS	Description
0			GW	10-inch ASPHALTIC CONCRETE
			CH	Brownish gray SANDY GRAVEL (BASALTIC) with cobbles, dense, dry
5				Light gray with multi-color mottling CLAY, very stiff, damp
10				grades with highly weathered gravel (basaltic), damp to dry
				Gray with multi-color mottling COBBLES AND BOULDERS (BASALTIC) in a silty clay matrix, dense, damp
15				Gray vesicular BASALT, closely fractured, moderately weathered, very hard with vertical fractures (basalt formation)
				grades to slightly fractured at 15.5 feet
20				
25				
				Gray vesicular BASALT, with silty clay seams on vertical fratured surfaces, slosely to severly fractured, moderately weathered, hard
30			ML	Bright orange SANDY SILT densely cemented, hard, damp
			SM	Orangish brown with multi-color mottling SILTY SAND (BASALTIC) moderately cemented, medium dense, damp
35				grades with rounded gravel and cobbles (basaltic) at 37.5 feet
40			GP	Gray with light gray mottling COBBLES AND BOULDER (BASALTIC) in a a silty clay matrix, very dense, damp to moist
45			SM	Tannish brown with multi-color mottling SILTY SAND with gravel and some cobbles (basaltic), medium dense, damp to moist
50			GP	Gray with light gray mottling BOULDERS (BASALTIC) in a clayey silt matrix, very dense (weathered rock)
55				Gray dense BASALT, slightly fractured, slightly weathered, very hard (basalt formation)
60				
65				Boring terminated at 65 feet
70				

BORING 6

Depth (feet)	Sample	Graphic	USCS	Description
0			GW	2-Inch ASPHALTIC CONCRETE
				Dark gray SANDY GRAVEL with traces of silt, dense, dry (fill)
			CH	Gray with orange mottling CLAY, stiff, damp
5				
10				Brown with white mottling SILTY CLAY with sand, very stiff, damp
				Gray moderately vesiculat BASALT, moderately to severely fractured, moderately to slightly weathered, hard (basalt formation)
15				grades from moderately to closely fractures
20				grades to slightly weathered
25				
30				Reddish brown and tan weathered VOLCANIC TUFF, hard (mudrock)
35				Dark gray vesicular COBBLES AND BOULDERS (BASALTIC), severely fractured, moderately to highly weathered, medium hard to hard
40				grades to highly weathered, soft to medium hard
45				Gray vesicular BASALT, moderately to closely fractured, moderately to slightly weathered, hard (basalt formation)
50				
55				grades from closely to slightly fractured
60				grades to closely fractured, slight weathered
65				Boring terminated at 65.5 feet
70				

ORIGINAL PLAN	SURVEY PLOTTED BY XXX	DATE XXX 1997
	DRAWN BY XXX	
NOTE BOOK	TRACED BY XXX	XXX 1997
	DESIGNED BY XXX	XXX 1997
	QUANTITIES BY XXX	XXX 1997
No. XXXXXXX	CHECKED BY XXX	XXX 1997

STATE OF HAWAII
DEPARTMENT OF TRANSPORTATION
HIGHWAYS DIVISION

RETAINING WALL REPAIR and EXTENSION

BORING LOGS

INTERSTATE ROUTE H-1 EXTENSION and REPAIR
of SCHOOL STREET ON-RAMP RETAINING WALL
Project No. HII-01-08

Scale: As Noted — Date: Feb. 2009

SHEET No. Q33 OF 34 SHEETS

FED. ROAD DIST. NO.	STATE	FED. AID PROJ. NO.	FISCAL YEAR	SHEET NO.	TOTAL SHEETS
HAWAII	HAW.	HII-01-08	2009	42	73

BORING 7

Depth (feet)	USCS	Description
0		11-Inch ASPHALTIC CONCRETE
	GW CH	Brownish gray SILTY GRAVEL (BASALTIC) with sand, dense, dry
		grades with some cobbles (basaltic) at 1.2 feet
5		Light gray with orange and brown mottling SILTY CLAY with some gravel (basaltic), very stiff, damp
		grades to light gray with blue mottling at 5 feet
10	CH	Light gray with multi-color mottling SILTY CLAY with highly weathered gravel and cobbles (basaltic), very stiff, dry to damp
	GP	Light tannish gray COBBLES AND BOULDERS (BASALTIC) in a clayey silt matrix, very dense, damp
15		Gray vesicular BASALT, slightly fractured, slightly weathered, very hard (basalt formation)
20		grades to slightly fractured at 21.5 feet
25		
30	SM	Bright orange SILTY SAND with some cobbles (basaltic), medium dense, damp
35		grades to reddish brown
40	GC	Grayish brown with multi-color mottling CLAYEY HIGHLY WEATHERED GRAVEL (BASALTIC) with sand, dense, damp
		grades to dark brown with multi-color mottling, medium dense
45	GP	Tannish brown with multi-color mottling COBBLES AND GRAVEL (BASALTIC) with some boulders in a silty clay matrix, dense, damp
50		Gray vesicular BASALT, moderately fractured, slightly weathered, very hard (basalt formation)
55		grades to slightly fractured
60		Boring terminated at 60.5 feet
65		
70		

BORING 8

Depth (feet)	USCS	Description
0	GW	4-Inch ASPHALTIC CONCRETE
	CH	Brownish gray SANDY GRAVEL (BASALTIC) with silt and cobbles, medium dense, dry
5	MH	Dark brown with multi-color mottling SILTY CLAY with some fine gravel (basaltic), very stiff, damp
		Light tannish gray with multi-color mottling CLAYEY SILT, very stiff to hard, damp to dry
10	GP	Gray with light gray mottling COBBLES AND GRAVEL (BASALTIC) in a sandy silt matrix, very dense, damp
		Gray vesicular BASALT, slightly fractured, slightly weathered, very hard (basalt formation)
15		
20		grades to moderately fractured
25		
30	ML	Bright orange fine SANDY SILT, densely cemented, very hard, damp (alluvium)
35	SC	Brown with multi-color mottling CLAYEY SAND with some gravel, medium dense, damp (old alluvium)
40	SM	Brown with multi-color mottling SILTY SAND (BASALTIC) with some gravel (basaltic), medium dense, damp
45	GP	Brown with multi-color mottling COBBLES AND BOULDERS (BASALTIC) in a silty clay matrix, dense, damp to moist
50		
55		
60		Gray dense BASALT, moderately fractured, slightly weathered, very hard (basalt formation)
65		Boring terminated at 65.5 feet
70		

BORING 9

Depth (feet)	USCS	Description
0		ASPHALTIC CONCRETE
	GW CH	Gray SANDY GRAVEL (BASALTIC) with silt, medium dense, dry (base course)
5		Light whitish gray with multi-color mottling SILTY CLAY with roots, medium stiff, damp (alluvium)
		grades to light tannish gray w/multi-color mottling at 4 feet
10	SM	Light tan with multi-color mottling SILTY SAND with gravel and some clay, medium dense, damp (weathered rock)
		grades with basaltic gravel at 12 feet
15		Gray vesicular BASALT, closely to severely fractured, moderately to highly weathered, hard (basalt formation)
20		grades to closely fractured, moderately weathered
25		grades to massive, very hard
30	SC	Reddish orange CLAYEY SAND (BASALTIC) with silt and gravel, medium dense, damp (clinker)
35	GC	Orangish brown CLAYEY GRAVEL (BASALTIC) with cobbles and silt, medium dense, damp (alluvium)
40	GP	Gray with light tannish gray COBBLES AND BOULDERS (BASALTIC) in a sandy clay matrix, very dense, damp (alluvium)
		Boring terminated at 40.1 feet
45		
50		
55		
60		
65		
70		

BORING 10

Depth (feet)	USCS	Description
0		ASPHALTIC CONCRETE
	GW CH	Dark gray SANDY GRAVEL (BASALTIC), medium dense, dry (base course)
5		Light gray with multi-color mottling SILTY CALY with roots, medium stiff, damp to moist (colluvium)
10	GW	Gray with multi-color mottling SANDY GRAVEL with silt, medium densi, damp (weathered rock)
15		Gray vesicular BASALT, moderately fractured, moderately weathered, hard (basalt formation)
20		grades to closely to severely fractured
25	CL	Orangish brown with multi-color mottling SANDY CLAY with gravel, very stiff, damp (alluvium)
30		
35		Gray with multi-color mottling BRECCIA, severely fractured, highly to extremely weathered, medium hard (volcanic brecia)
40		Boring terminated at 40.1 feet
45		
50		
55		
60		
65		
70		

ORIGINAL PLANS		SURVEY PLOTTED BY XXX	DATE XXX 1991
		DRAWN BY XXX	
		TRACED BY XXX	XXX 1991
NOTE BOOK		DESIGNED BY XXX	XXX 1991
No. XXXXXXX		QUANTITIES BY XXX	XXX 1991
		CHECKED BY XXX	XXX 1991

STATE OF HAWAII
DEPARTMENT OF TRANSPORTATION
HIGHWAYS DIVISION

RETAINING WALL REPAIR and EXTENSION

BORING LOGS

INTERSTATE ROUTE H-1 EXTENSION and REPAIR
of SCHOOL STREET ON-RAMP RETAINING WALL
Project No. H11-01-08

Scale: As Noted — Date: Feb. 2009