FED. ROAD DIST. NO.	STATE	FEDERAL AID PROJ. NO.	FISCAL YEAR	SHEET NO.	TOTAL SHEETS
HAWAII	HAW.	IM-H1-1(245)	2005	144	183

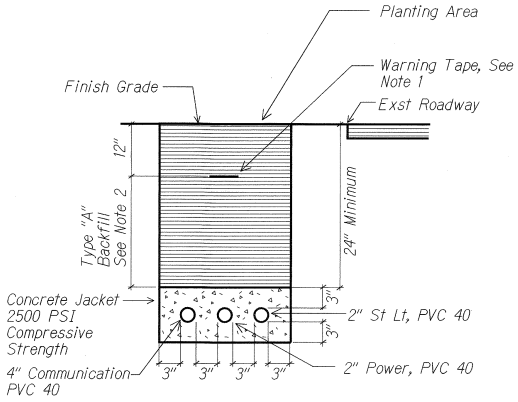

A E1 E17 DUCT SECTION (A) NTS 03102-d2

(A1) Similar Except Without St Lt Conduit

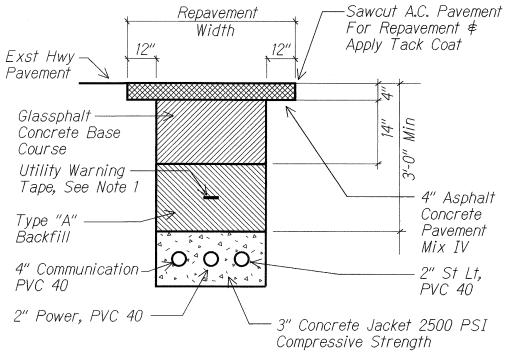

B E1 E17 DUCT SECTION (B) NTS 03102-d2

(B1) Similar Except Without St Lt Conduit

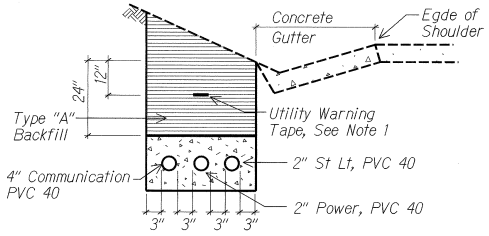

C E1 E17 DUCT SECTION (C) NTS 03102-d2

NOTES:

1. 8 MIL Thick Red Colored Plastic Warning Tape 3" Wide, Entire Length of Duct. Tape to Have Continuous Metallic Backing and Corrosion Resistant Foil Core. Warning and Identification to be Imprinted on Tape and Shall Read "Caution Buried Electric Cable Below". Message Shall Be Repeated Approximately Every Ten Feet.
2. Type "A" Backfill: Beach Sand, Earth or Earth and Gravel Used, the Maximum Rock Size Shall Be 1" and the Mixture Shall Contain Not More Than 50% By Volume of Rock Particles.

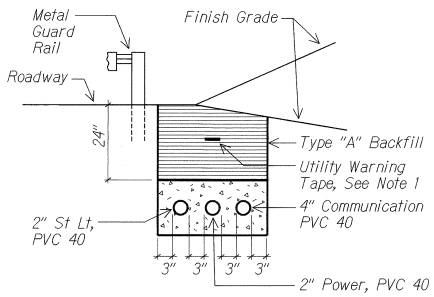

D E1 E17 DUCT SECTION (D) NTS 03102-d2

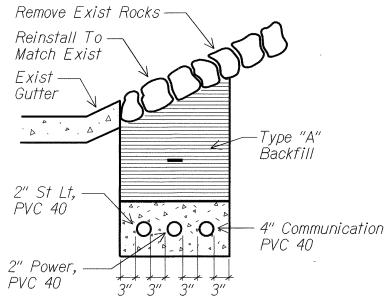

E E1 E17 DUCT SECTION (E) NTS 03102-d2

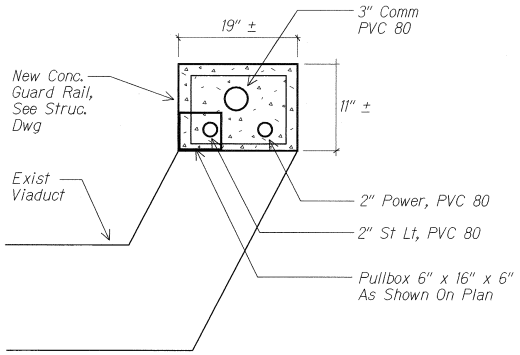

F E1 E17 DUCT SECTION (F) NTS 03102-d2

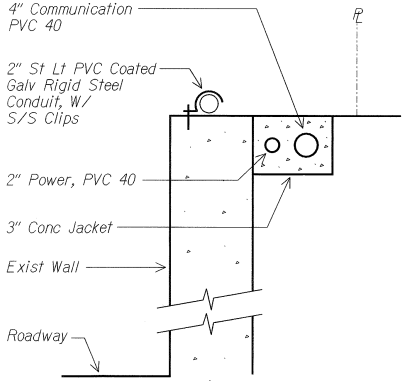

G E1 E17 DUCT SECTION (G) NTS 03102-d2

ORIGINAL PLAN	SURVEY PLOTTED BY	DATE
	DRAWN BY	
	TRACED BY	
	DESIGNED BY	
NOTE BOOK	QUANTITIES BY	
	CHECKED BY	
No.		

R.C. KATAHARA
LICENSED PROFESSIONAL ENGINEER
No. 3181-E
HAWAII, U.S.A.
11/9/06
MK ENGINEERS, LTD.
LICENSE EXPIRATION DATE: 4/30/06
THIS WORK WAS PREPARED BY ME OR UNDER MY SUPERVISION.

STATE OF HAWAII
DEPARTMENT OF TRANSPORTATION
HIGHWAYS DIVISION

DUCT SECTIONS

INTERSTATE ROUTE H-1 REHABILITATION
EASTBOUND LANES
WAIAU INTERCHANGE TO KAIMAKANI STREET

Scale: Not to Scale Date: Jan. 24, 2006

SHEET No. E-17 OF 21 SHEETS