FED. ROAD DIST. NO.	STATE	FED. AID PROJ. NO.	FISCAL YEAR	SHEET NO.	TOTAL SHEETS
HAWAII	HAW.	I-H1-1 (115):13	1973	28	53

℄ STA. 35+27.7, % 64' Lt.
Construct: Type G1214-45° CD1
(For details, see sht. no. 11H)
Install: 24" RCP, Cl. III

ESTIMATED QUANTITIES

Struct. Exc.	=	157	C.Y.
Class "A" Conc.	=	8.5	C.Y.
Reinf. Steel	=	33	Lbs.
24" Culvert	=	124	L.F.
Type G1214-45° Steel Fr. & Gr.	=	1	Ea.

℄ STA. 35+27.7, % 111.8' Lt.
Construct: Type "E" SDMH & GRP
(For details, see sht. no. 5H & 14H)
Install: 24" RCP, Cl. III

ESTIMATED QUANTITIES

Struct. Exc.	=	67	C.Y.
Class "B" Conc.	=	2	C.Y.
GRP	=	0.5	C.Y.
Brick wall for SDMH	=	5	L.F.
Reinf. Steel	=	45	Lbs.
24" Culvert	=	50	L.F.
Type "A" Cl. Fr. & Cover	=	1	Ea.

℄ STA. 36+50 Lt.
Construct: Type Median CD1
(For details, see sht. no. 13H)
Install: 24" RCP, Cl. III

ESTIMATED QUANTITIES

Struct. Exc.	=	219	C.Y.
Class "A" Conc.	=	6.0	C.Y.
Reinf. Steel	=	741	Lbs.
24" Culvert	=	136	L.F.
Type A-12 Steel Fr. & Gr.	=	3	Ea.

℄ STA. 36+50, % 56.45' Lt.
Construct: Type G1214-45° CD1
(For details, see sht. no. 11H)
Install: 24" RCP, Cl. III

ESTIMATED QUANTITIES

Struct. Exc.	=	115	C.Y.
Class "A" Conc.	=	8.5	C.Y.
Reinf. Steel	=	33	Lbs.
24" Culvert	=	114	L.F.
Type G1214-45° Steel Fr. & Gr.	=	1	Ea.

℄ STA. 38+00 Lt.
Construct: Type Median CD1
(For details, see sht. no. 13H)
Install: 24" RCP, Cl. III

ESTIMATED QUANTITIES

Struct. Exc.	=	230	C.Y.
Class "A" Conc.	=	4.5	C.Y.
Reinf. Steel	=	629	Lbs.
24" Culvert	=	144	L.F.
Type A-12 Steel Fr. & Gr.	=	2	Ea.

℄ STA. 38+50 Lt.
Construct: Type Median CD1
(For details, see sht. no. 13H)
Install: 24" RCP, Cl. III

ESTIMATED QUANTITIES

Struct. Exc.	=	67	C.Y.
Class "A" Conc.	=	4.0	C.Y.
Reinf. Steel	=	574	Lbs.
24" Culvert	=	44	L.F.
Type A-12 Steel Fr. & Gr.	=	2	Ea.

TRUE NORTH
Scale: 1" = 50'

NOTE: 1. See notes nos. 2 & 3 on sheet no. 2H)
2. Connection to existing SDMH shall be considered incidental to Structure Excavation.

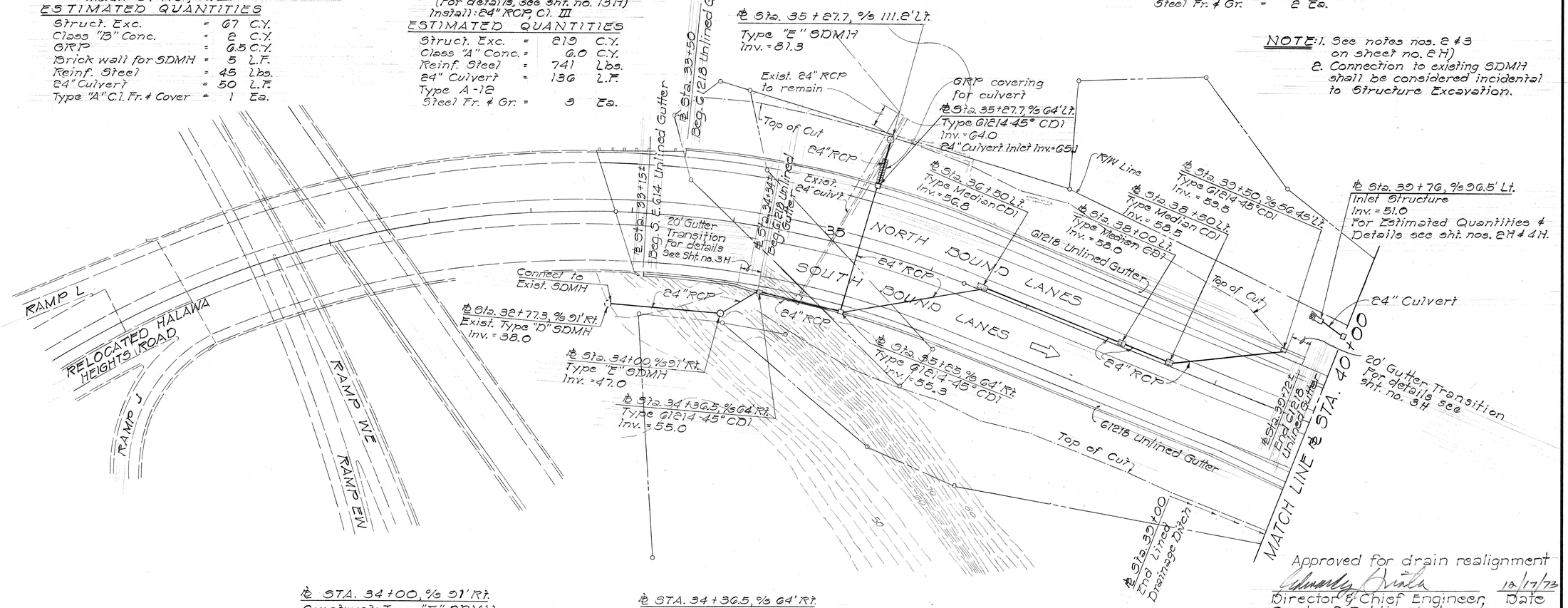

℄ STA. 34+00, % 91' Rt.
Construct: Type "E" SDMH
(For details, see sht. no. 14H)
Install: 24" RCP, Cl. III

ESTIMATED QUANTITIES

Struct. Exc.	=	198	C.Y.
Class "B" Conc.	=	3.5	C.Y.
Brick wall for SDMH	=	5	L.F.
Reinf. Steel	=	210	Lbs.
24" Culvert	=	112	L.F.
Type "A" Cl. Fr. & Cover	=	1	Ea.

℄ STA. 34+36.5, % 64' Rt.
Construct: Type G1214-45° CD1
(For details, see sht. no. 11H)
Install: 24" RCP, Cl. III

ESTIMATED QUANTITIES

Struct. Exc.	=	85	C.Y.
Class "A" Conc	=	3.5	C.Y.
Reinf. Steel	=	478	Lbs.
24" Culvert	=	44	L.F.
Type G1214-45° Steel Fr. & Gr.	=	1	Ea.

℄ STA. 35+25, % 64' Rt.
Construct: Type G1214-45° CD1
(For details, see sht. no. 11H)
Install: 24" RCP, Cl. III

ESTIMATED QUANTITIES

Struct. Exc.	=	120	C.Y.
Class "A" Conc.	=	3.5	C.Y.
Reinf. Steel	=	445	Lbs.
24" Culvert	=	84	L.F.
Type G1214-45° Steel Fr. & Gr.	=	1	Ea.

Approved for drain realignment

Director & Chief Engineer, Dept. of Public Works, City & County of Honolulu — Date 12/17/73

Chief, Division of Engineering, Dept. of Public Works, City & County of Honolulu — Date 12/17/73

STATE OF HAWAII
DEPARTMENT OF TRANSPORTATION
HIGHWAYS DIVISION

DRAINAGE PLAN

INTERSTATE ROUTE H-1
Halawa Heights Road
F.A.I. Proj. No. I-H1-1(115):13

Scale: 1" = 50' Date: Dec. 1973

SHEET No. 1H OF 16H SHEETS

ORIGINAL PLAN	SURVEY PLOTTED BY	DATE
	TRACED BY	
	TRACED BY	
NOTE BOOK	DESIGNED BY	
	QUANTITIES BY	
No.	CHECKED BY	

FED. ROAD DIST. NO.	STATE	FED. AID PROJ. NO.	FISCAL YEAR	SHEET NO.	TOTAL SHEETS
HAWAII	HAW.	I-H1-1 (115):13	1973	29	53

℄ STA. 43+50 Lt. to 45+88 Lt.

Construct: Lined Rect. Drainage Ditch, 3'x2'
Lined Trap. Drainage Ditch 1½'x2' (S:S ½:1)
(For details, see sht. no. 9H)

ESTIMATED QUANTITIES

Lined Rect. Drainage Ditch	=	26 L.F.
Lined Trap. Drainage Ditch	=	214 L.F.
Ditch & Channel Exc.	=	107 C.Y.

℄ STA. 43+50, % 52' Lt. to 48+00, % 52' Lt.

Construct: G1214-45° CDI (For details see sht. no. 11H)
Install: 36" CMP, 0.168" sht. thk. or
30" RCP, Cl. III or
30" ACP, Cl. III

ESTIMATED QUANTITIES

Struct. Exc.	=	384 C.Y.
Class "A" Conc.	=	5.5 C.Y.
36" CMP, 0.168" sht. thk. or 30" RCP, Cl. III or 30" ACP, Cl. III	=	446 L.F.
Type G1214-45° Steel Fr. & Gr.		2 Ea.
Reinf. Steel		574 L.F.

℄ STA. 48+00

Construct: G1214-45° CDI, Median CDI, & CRM Hdwall (For details, see sht. no. 10H, 11H, & 13H)
Install: 24" CMP, 0.168" sht. thk. or
24" RCP, Cl. III or
24" ACP, Cl. III
Install: 36" CMP, 0.168" sht. thk. or
36" RCP, Cl. IV or
36" ACP, Cl. IV

ESTIMATED QUANTITIES

Struct. Exc.	= 209	C.Y.
Class "A" Conc.	= 8	C.Y.
Reinf. Steel	= 658	Lbs.
24" Culvert	= 124	L.F.
36" Culvert	= 62	L.F.
Type "A-12 Steel Fr. & Cover	= 2	Ea.
Type G1214-45° Steel Fr. & Gr.	= 2	Ea.
CRM	= 10.5	C.Y.

℄ STA. 46+00 Lt. to 48+50 Lt.

Construct: GRP, Unlined Channel (For details, see sht. no. 10H)

ESTIMATED QUANTITIES

GRP	= 94	C.Y.
Ditch & Channel Exc.	= 134	C.Y.

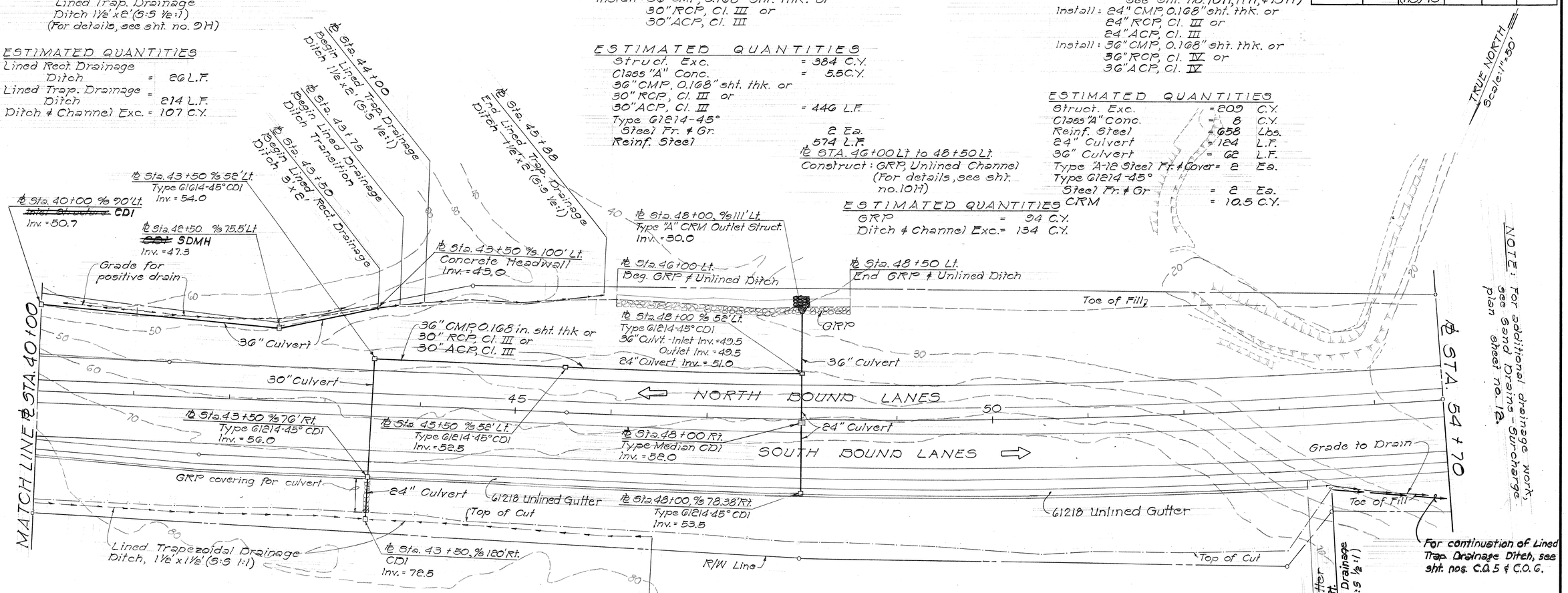

NOTE: For additional drainage work, see Sand Drain Surcharge plan sheet no. 12.

℄ STA. 39+76, % 96.5' Lt. to 43+50, % 100' Lt.

Construct: SDMH, CDI, GRP, Conc. Hdwall, Inlet Struc., Lined Drainage Ditch (For details, see sht. nos. 4H, 5H, 6H, & 8H)
Install: 24" CMP, 0.138" sht. thk. or
24" RCP, Cl. IV or
24" ACP, Cl. IV
Install: 36" CMP, 0.138" sht. thk. or
36" RCP, Cl. IV or
36" ACP, Cl. IV

ESTIMATED QUANTITIES

Struct. Exc.	= 447	C.Y.
Ditch & Channel Exc.	= 3	C.Y.
Class "A" Conc.	= 8.5	C.Y.
Reinf. Steel	= 983	Lbs.
24" Culvert	= 24	L.F.
36" Culvert	= 350	L.F.
GRP	= 3.5	C.Y.
Type "A" C.I. Fr. & Cover	= 1	Ea.

℄ STA. 43+50

Construct: CDI, G1214-45° CDI (For details, see sht. nos. 7H & 11H)
Install: 24" CMP, 0.138" sht. thk. or
24" RCP, Cl. III or
24" ACP, Cl. III
Install: 30" CMP, 0.138" sht. thk. or
30" RCP, Cl. III or
30" ACP, Cl. III

ESTIMATED QUANTITIES

Struct. Exc.	= 143	C.Y.
Class "A" Conc.	= 4.5	C.Y.
Reinf. Steel	= 33	Lbs.
24" Culvert	= 46	L.F.
30" Culvert	= 122	L.F.
GRP	= 7.0	C.Y.
Type G1214-45° Steel Fr. & Gr.	= 1	Ea.

℄ STA. 39+00 Rt. to 46+50 Rt.

Construct: Lined Trap. Drainage Ditch, 1½'x1½' (S:S 1:1)
(For details, see sht. no. 7H)

ESTIMATED QUANTITIES

Lined Trap. Drainage Ditch, 1½'x1½' (S:S 1:1)	= 746	L.F.
Ditch & Channel Exc.	= 224	C.Y.

NOTES:

1. Embankment fill for installation of culverts between ℄ Sta. 39+76 ±, % 96.5' Lt., to ℄ Sta. 43+50, % 100' Lt. shall not extend beyond the R/W Line.
2. Grading for positive drainage between ℄ Sta. 39+76 ±, % 96.5 Lt. to ℄ Sta. 43+50, % 100' Lt. shall be considered incidental to Structural Excavation.
3. Contractor shall maintain flow for all existing culverts and channel or ditches.

ORIGINAL PLAN	SURVEY PLOTTED BY	DATE
	DRAWN BY	
	TRACED BY	
NOTE BOOK	DESIGNED BY	
	QUANTITIES BY	
No.	CHECKED BY	

STATE OF HAWAII
DEPARTMENT OF TRANSPORTATION
HIGHWAYS DIVISION

DRAINAGE PLAN

INTERSTATE ROUTE H-1
Halawa Heights Road
F.A.I. Proj. No. I-H1-1(115):13

Scale: 1"=50' Date: Dec., 1973

SHEET No. 2H OF 16H SHEETS

FED. ROAD DIST. NO.	STATE	FED. AID PROJ. NO.	FISCAL YEAR	SHEET NO.	TOTAL SHEETS
HAWAII	HAW.	I-H1-1 (115):13	1973	30	53

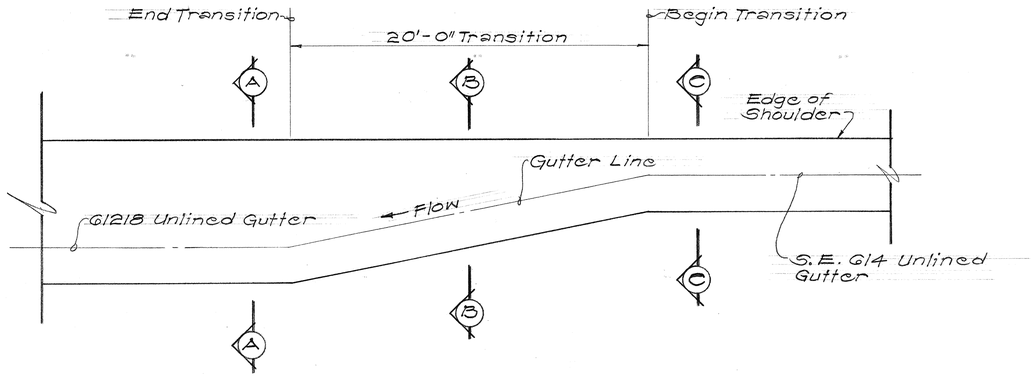

PLAN
Scale: 1/4"=1'-0"

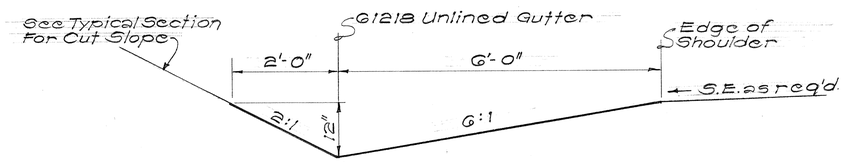

SECTION "A-A"
Scale: 3/4"=1'-0"

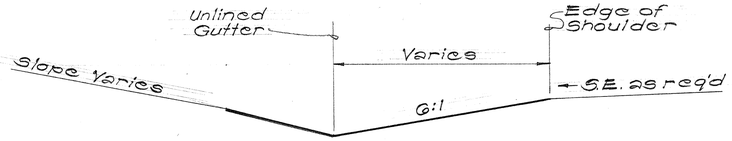

SECTION "B-B"
Scale: 3/4"=1'-0"

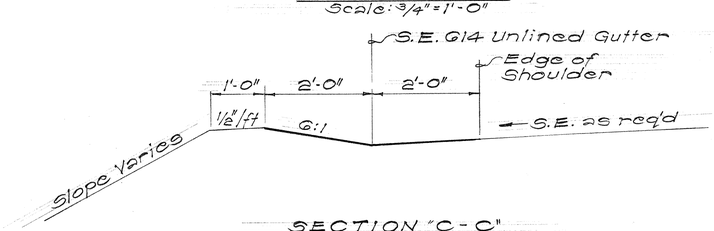

SECTION "C-C"
Scale: 3/4"=1'-0"

TRANSITION FROM FILL SECTION TO CUT SECTION OF SHOULDER GUTTER

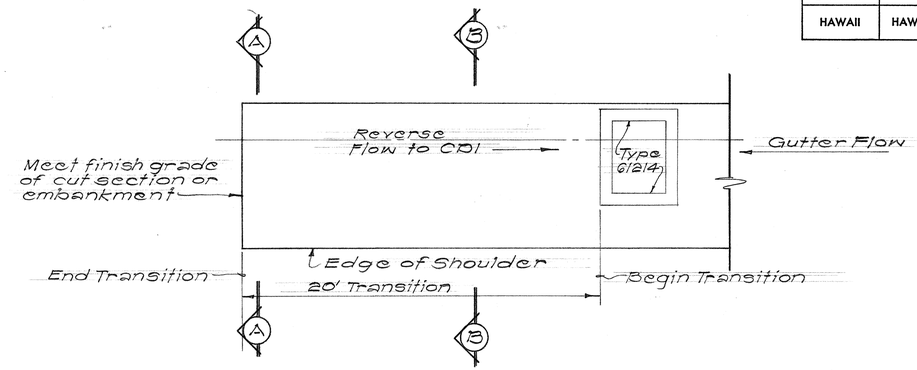

PLAN
Scale: 1/4"=1'-0"

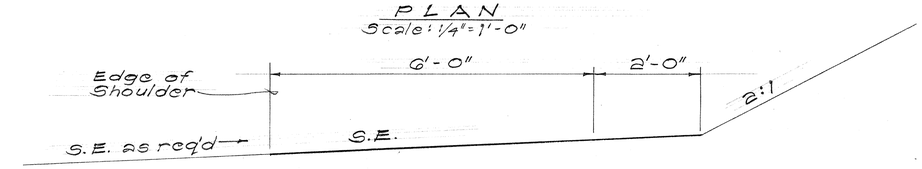

SECTION "A-A"
Scale: 3/4"=1'-0"

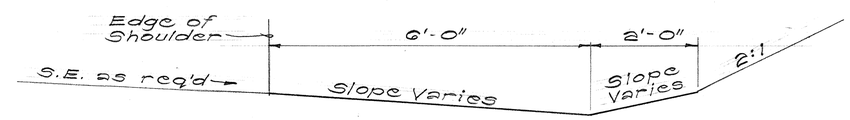

SECTION "B-B"
Scale: 3/4"=1'-0"

20' GUTTER TRANSITION @ TERMINATION OF G1218 UNLINED GUTTER

ORIGINAL PLAN	SURVEY PLOTTED BY	DATE
	DRAWN BY	"
	TRACED BY	"
NOTE BOOK	DESIGNED BY	"
	QUANTITIES BY	"
No.	CHECKED BY	"

STATE OF HAWAII
DEPARTMENT OF TRANSPORTATION
HIGHWAYS DIVISION

DRAINAGE DETAILS
UNLINED GUTTER TRANSITIONS

INTERSTATE ROUTE H-1
Halawa Heights Road
F.A.I. Proj. No. I-H1-1(115):13

Scale: As Noted Date: Dec. 1973

SHEET No. 5H OF 16H SHEETS

K+E CRYSTALENE® TRACING PAPER

FED. ROAD DIST. NO.	STATE	FED. AID PROJ. NO.	FISCAL YEAR	SHEET NO.	TOTAL SHEETS
HAWAII	HAW.	I-H1-1 (115):13	1973	31	53

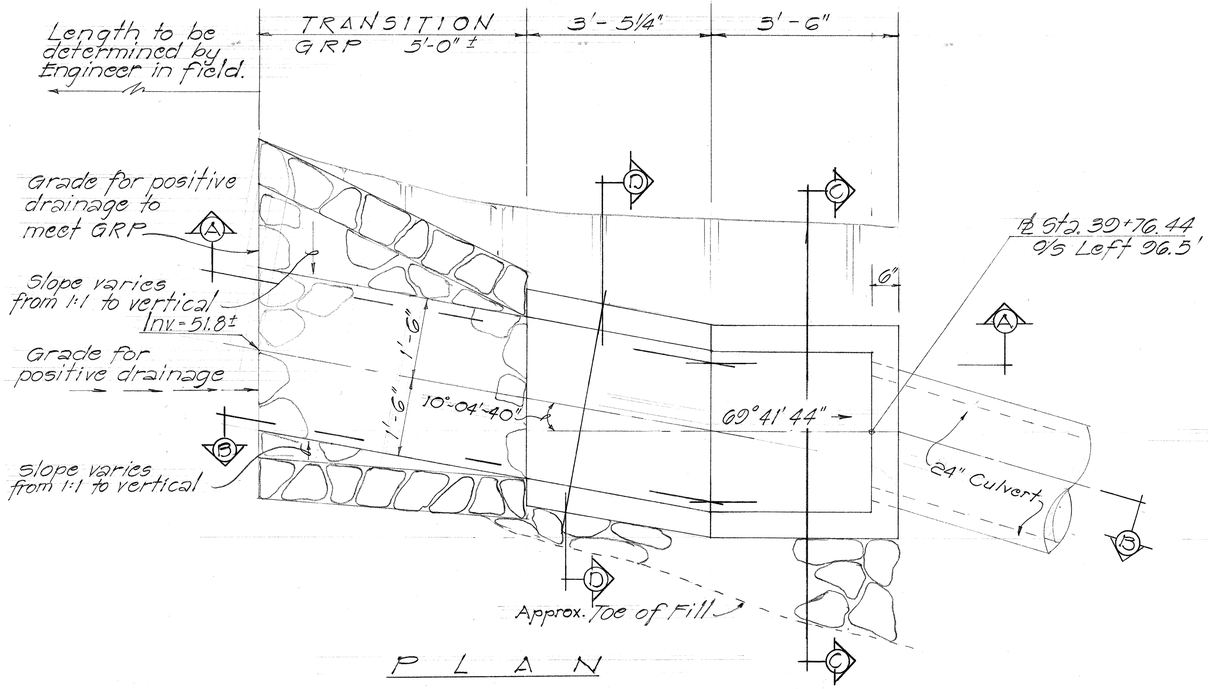

PLAN

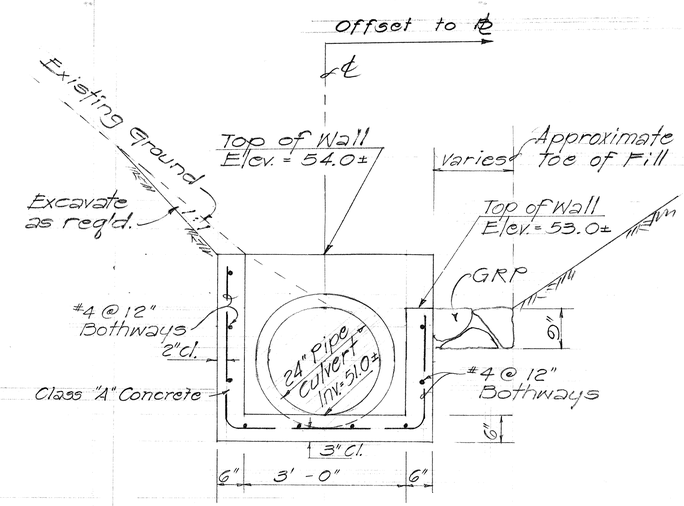

SECTION "C-C"

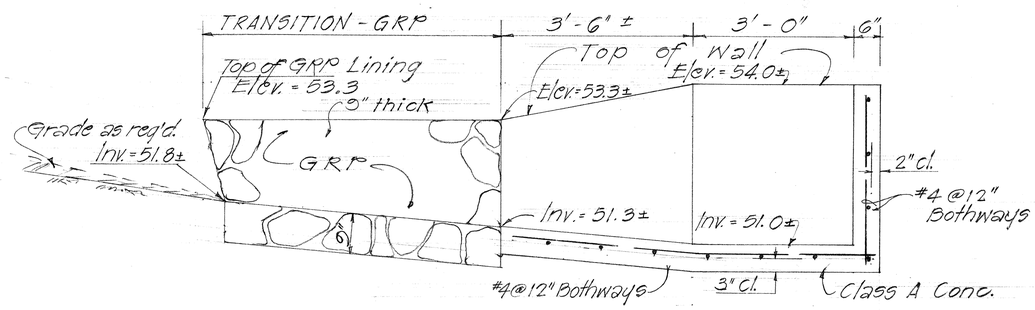

SECTION "A-A"

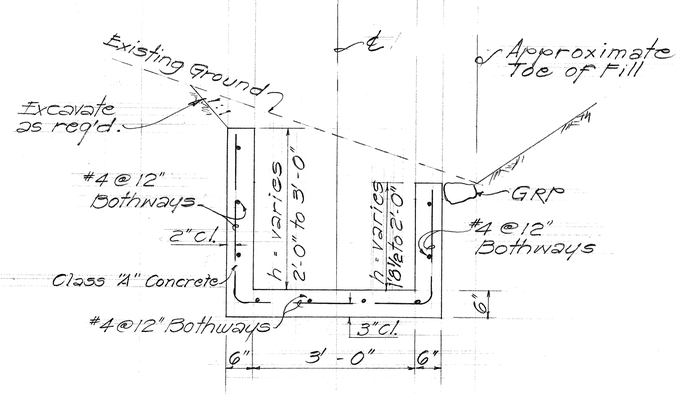

SECTION "D-D"

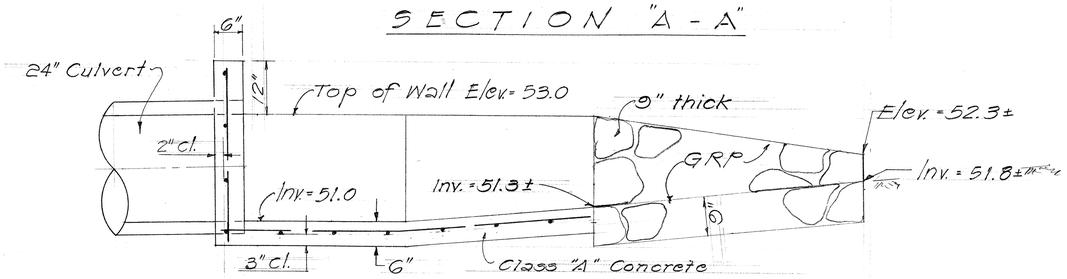

SECTION "B-B"

DETAIL OF INLET STRUCTURE @ ℄ STA. 39+76, % 96.5' LEFT

Scale: 3/4" = 1'-0"

ORIGINAL PLAN	SURVEY PLOTTED BY	DATE
	DRAWN BY	
	TRACED BY	
NOTE BOOK	DESIGNED BY	
	QUANTITIES BY	
No.	CHECKED BY	

STATE OF HAWAII
DEPARTMENT OF TRANSPORTATION
HIGHWAYS DIVISION

DRAINAGE DETAILS

INLET STRUCT. @ ℄ STA. 39+76, % 96.5' LEFT

INTERSTATE ROUTE H-1
Halawa Heights Road
F.A.I. Proj. No. I-H1-1(115):13

Scale: As Noted Date: Dec., 1973

SHEET No. 41 OF 104 SHEETS

FED. ROAD DIST. NO.	STATE	FED. AID PROJ. NO.	FISCAL YEAR	SHEET NO.	TOTAL SHEETS
HAWAII	HAW.	I-H1-1 (115):13	1973	32	53

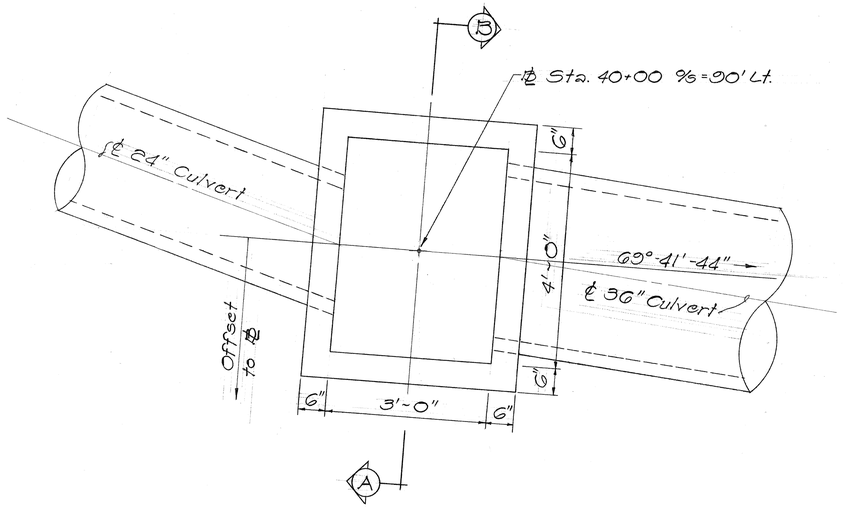

PLAN

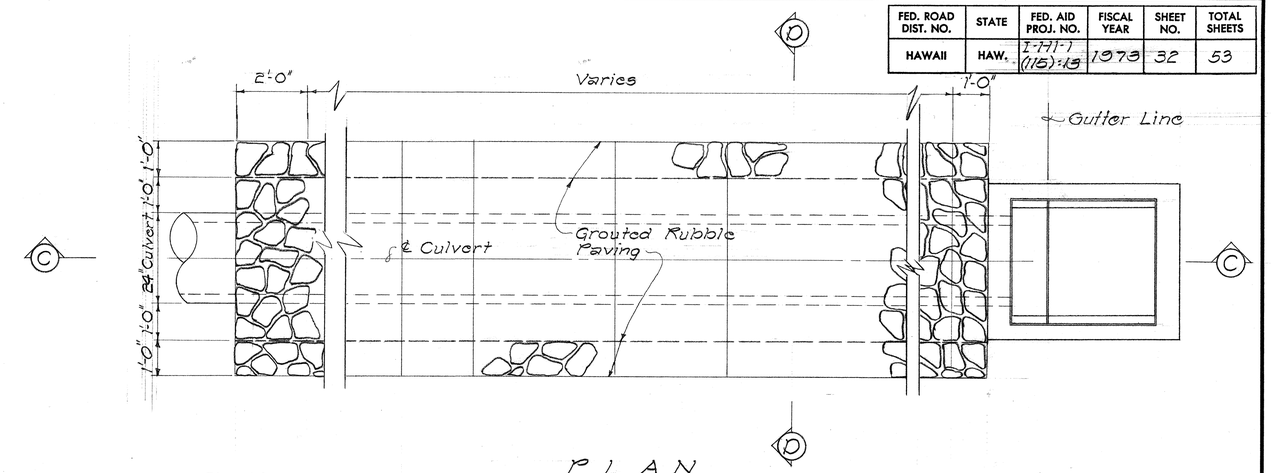

PLAN

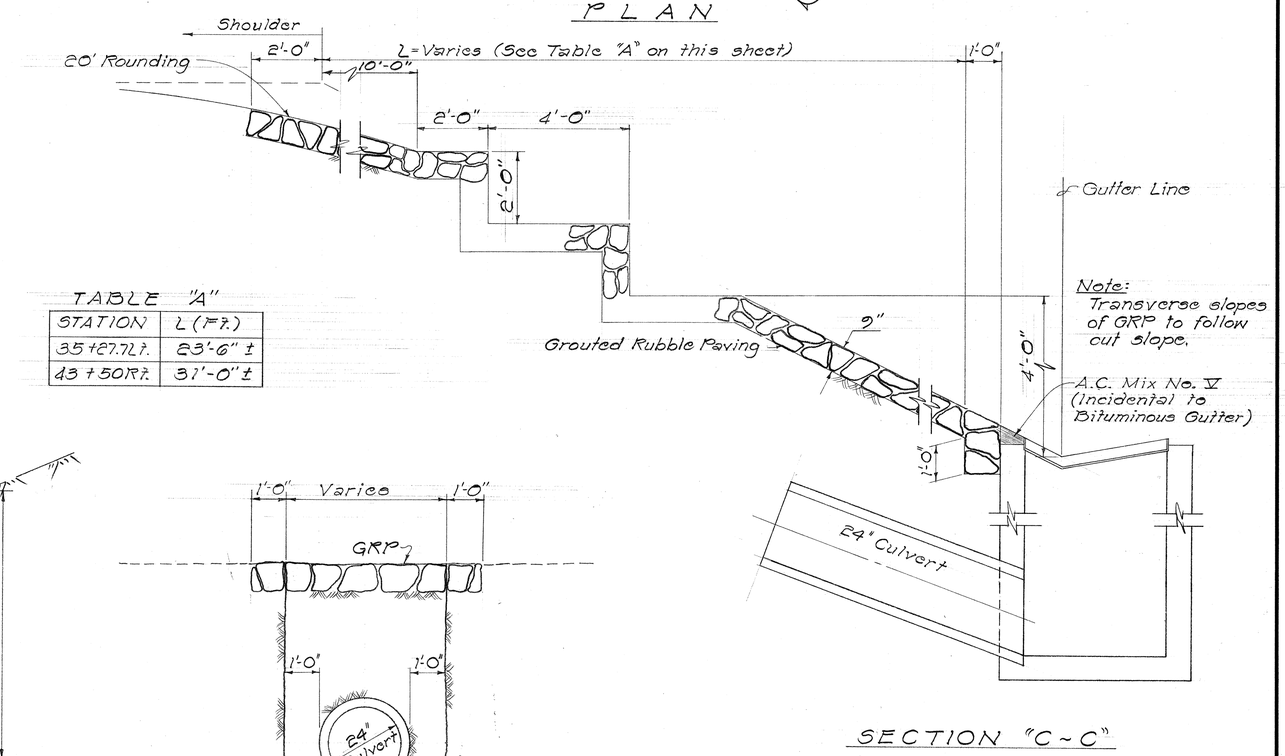

SECTION "C-C"

TABLE "A"

STATION	L (Ft.)
35+27.72 Rt.	23'-6" ±
43+50 Rt.	31'-0" ±

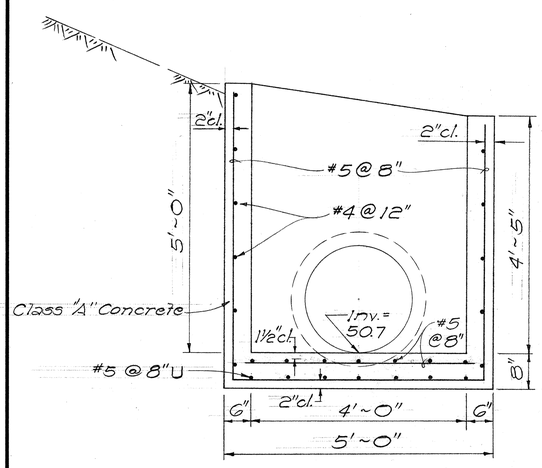

SECTION "A-A"

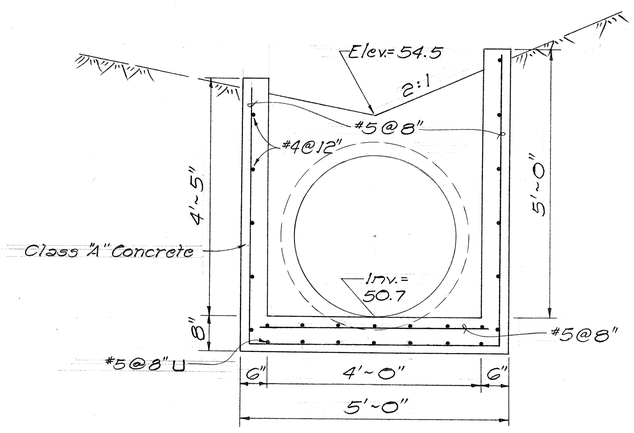

SECTION "B-B"

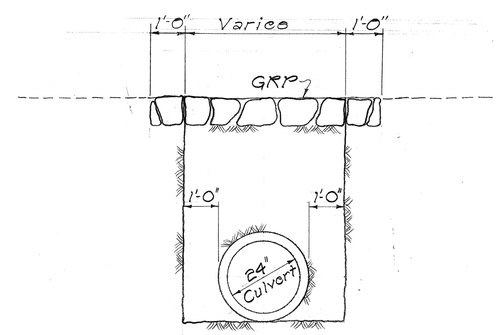

SECTION "D-D"

DETAILS OF CDI AT ℄ STA. 40+00, % 90' LT.

Scale: 3/4" = 1'-0"

DETAILS OF GROUTED RUBBLE PAVING OVER CULVERT

Scale: 1/2" = 1'-0"

ORIGINAL PLAN	SURVEY PLOTTED BY	DATE
	DRAWN BY	
	TRACED BY	
NOTE BOOK	DESIGNED BY	
	QUANTITIES BY	
No.	CHECKED BY	

STATE OF HAWAII
DEPARTMENT OF TRANSPORTATION
HIGHWAYS DIVISION

DRAINAGE DETAILS
CDI @ ℄ STA. 40+00, % 90' LT.
& GRP OVER CULVERT
INTERSTATE ROUTE H-1
Halawa Heights Road
F.A.I. Proj. No. I-H1-1(115):13
Scale: As Noted Date: Dec., 1973

SHEET No. 54 OF 104 SHEETS

FED. ROAD DIST. NO.	STATE	FED. AID PROJ. NO.	FISCAL YEAR	SHEET NO.	TOTAL SHEETS
HAWAII	HAW.	I-171-1 (115):13	1973	33	53

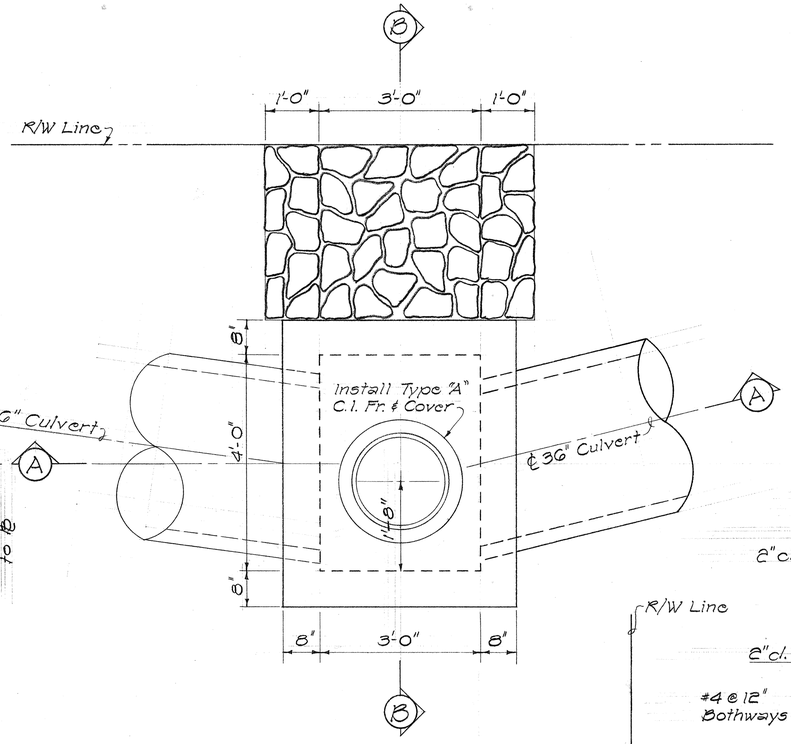

PLAN

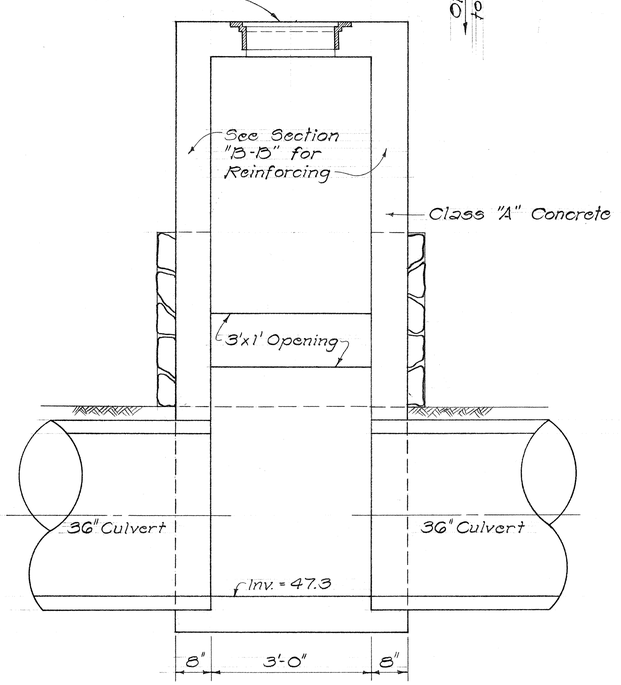

SECTION "A-A"

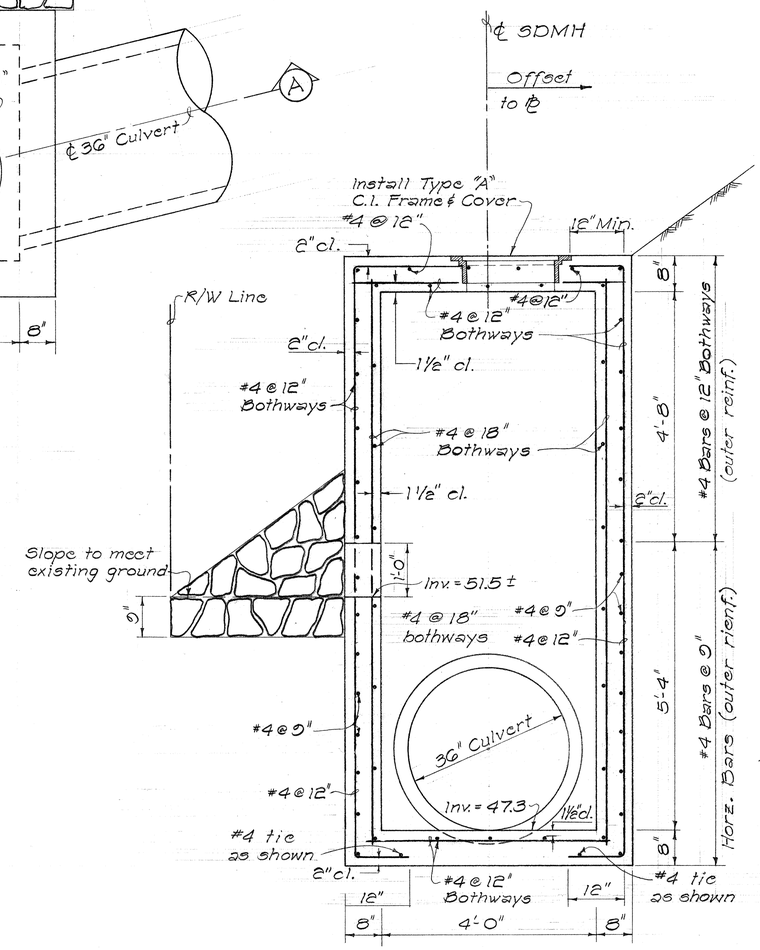

SECTION "B-B"

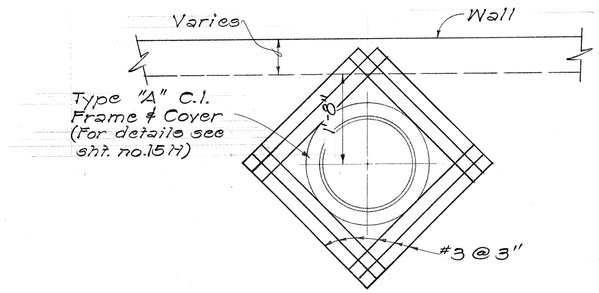

TYPICAL REINF. AROUND M.H. FRAME & COVER

Scale: 3/4" = 1'-0"

DETAILS OF SDMH AT ℄ STA. 42 + 50
75.5' % LT.

Scale: 3/4" = 1'-0"

ORIGINAL PLAN	SURVEY PLOTTED BY	DATE
	DRAWN BY	
	TRACED BY	
NOTE BOOK	DESIGNED BY	
	QUANTITIES BY	
No.	CHECKED BY	

STATE OF HAWAII
DEPARTMENT OF TRANSPORTATION
HIGHWAYS DIVISION

DRAINAGE DETAILS
SDMH @ ℄ STA.
42+50, % 75.5' LT.
INTERSTATE ROUTE H-1
Halawa Heights Road
F.A.I. Proj. No. I-H1-1(115):13

Scale: As Noted Date: Dec., 1973

SHEET No. 6H OF 16H SHEETS

FED. ROAD DIST. NO.	STATE	FED. AID PROJ. NO.	FISCAL YEAR	SHEET NO.	TOTAL SHEETS
HAWAII	HAW.	I-H1-1 (115):13	1973	34	53

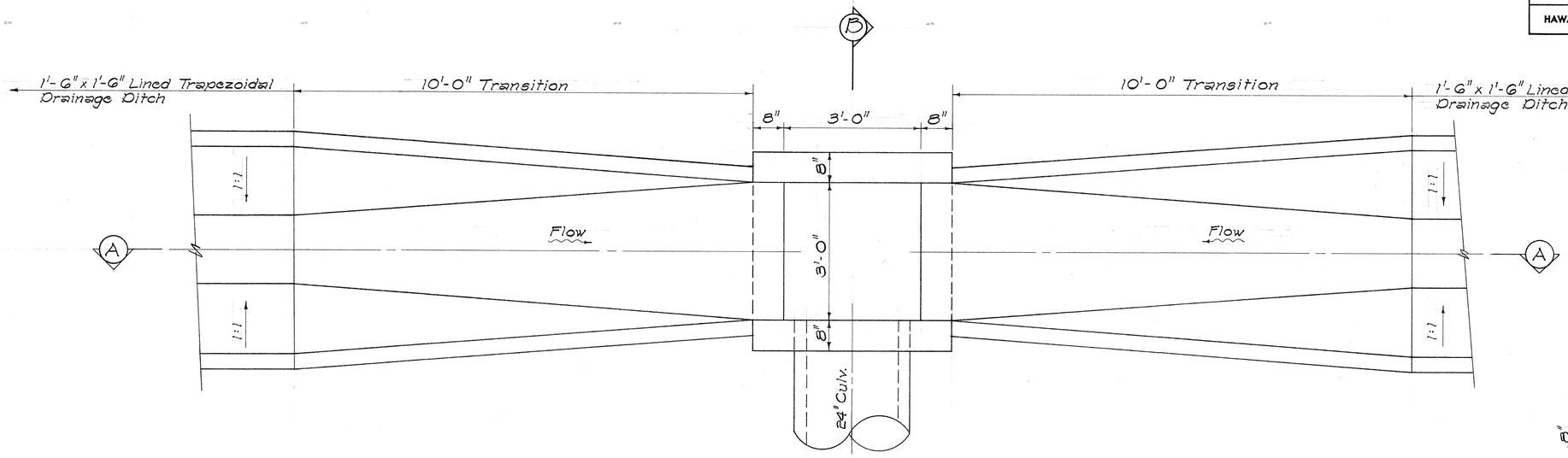

PLAN
Scale: 3/4" = 1'-0"

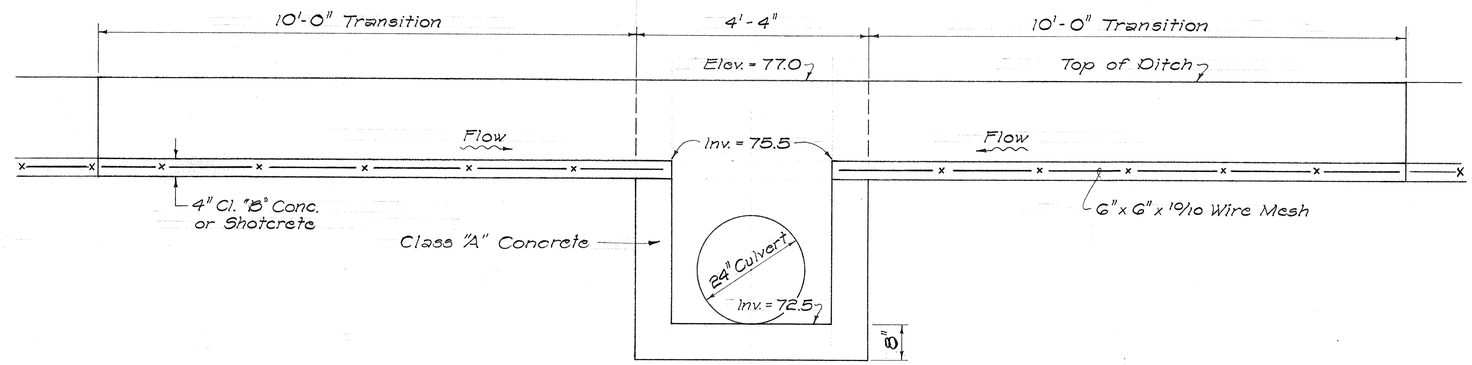

SECTION "A ~ A"
Scale: 3/4" = 1'-0"

NOTES

1. Connection Collar shall be incidental to RCP or ACP.
2. Connection Collars shall be Class "B" Concrete.

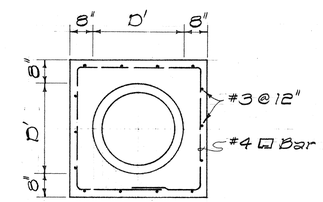

SECTION "B~B"

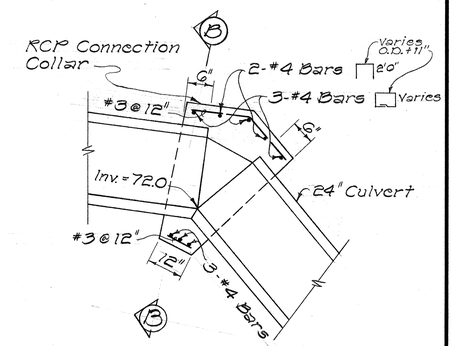

DETAIL "A"
DETAIL OF CONCRETE COLLAR CONNECTION
Scale: 1/2" = 1'-0"

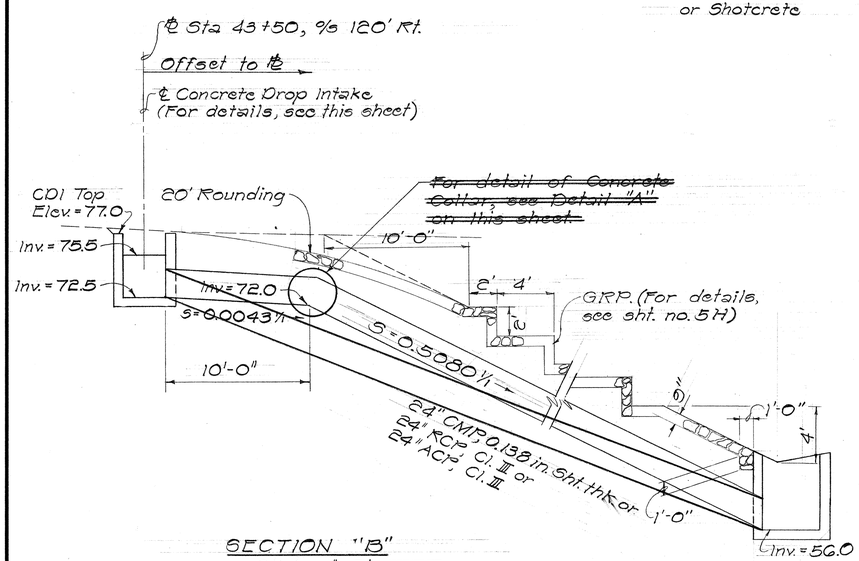

SECTION "B"
Scale: 1" = 5'

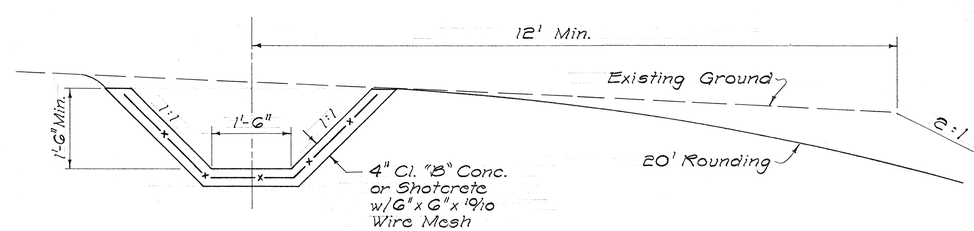

DETAIL OF 1'-6" x 1'-6" LINED TRAPEZOIDAL DRAINAGE DITCH
Scale: 3/4" = 1'-0"

STATE OF HAWAII
DEPARTMENT OF TRANSPORTATION
HIGHWAYS DIVISION

DRAINAGE DETAILS
CDI @ ℄ STA. 43+50, % 120' RT, CONC. COLLAR CONN. AND 1'-6" x 1'-6" LINED TRAP. DRAINAGE DITCH
INTERSTATE ROUTE H-1
Halawa Heights Road
F.A.I. Proj. No. I-H1-1 (115):13
Scale: As Noted Date: Dec., 1973

SHEET No. 7H OF 16H SHEETS

DETAILS OF CDI @ ℄ STA. 43 + 50, % 120' RT. & CONCRETE COLLAR CONNECTION

ORIGINAL PLAN	SURVEY PLOTTED BY	DATE
	TRACED BY	
	DESIGNED BY	
NOTE BOOK	QUANTITIES BY	
No.	CHECKED BY	

FED. ROAD DIST. NO.	STATE	FED. AID PROJ. NO.	FISCAL YEAR	SHEET NO.	TOTAL SHEETS
HAWAII	HAW.	I-111-1 (115):13	1973	35	53

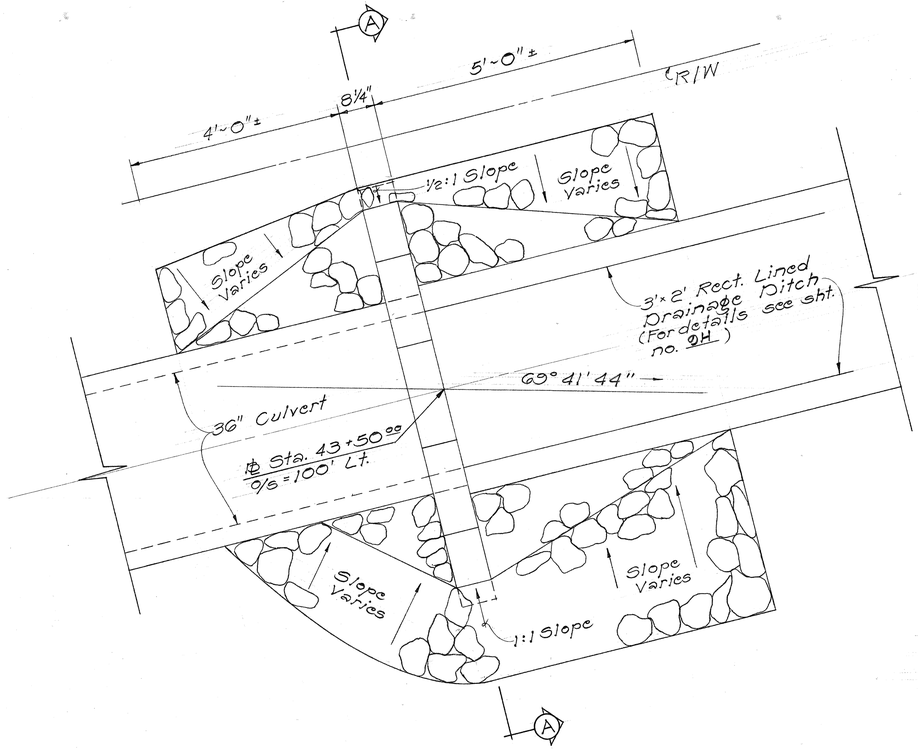

PLAN
Scale: 3/4" = 1'-0"

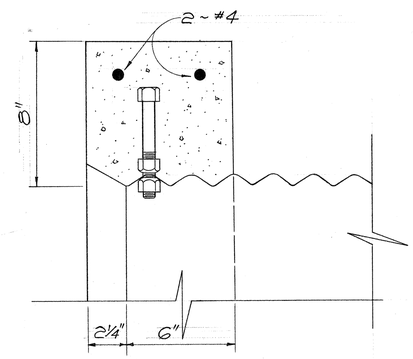

DETAIL "C"
Scale: 3" = 1'-0"

GENERAL NOTE:

1. Anchor Bolts: Anchor bolts are not required for concrete pipe.

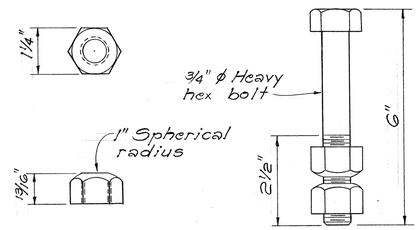

Bolt and nut to be cleaned after galvanizing to provide a free running fit.

ANCHOR BOLT DETAIL
Scale: 6" = 1'-0"

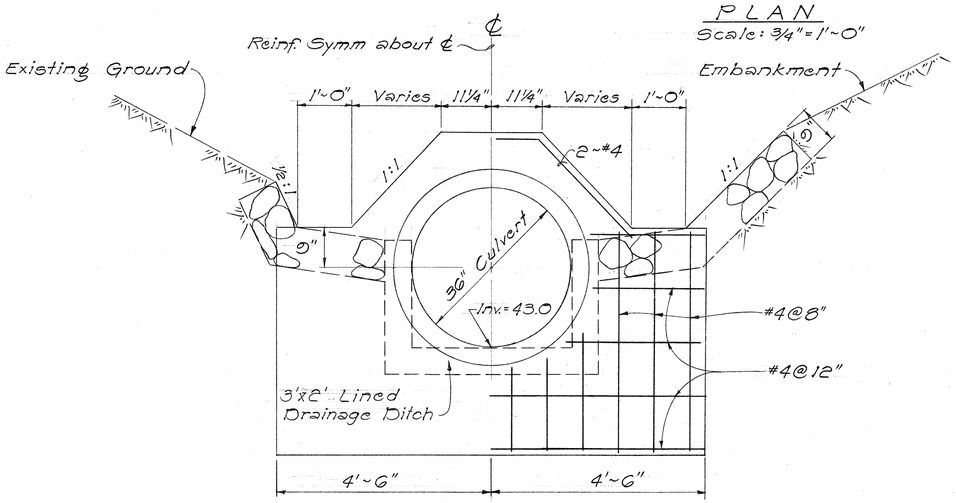

SECTION "A-A"
Scale: 3/4" = 1'-0"

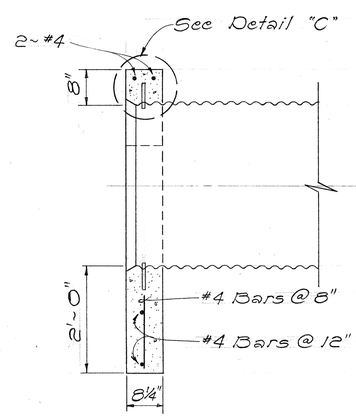

CORR. METAL PIPE
Scale: 3/4" = 1'-0"

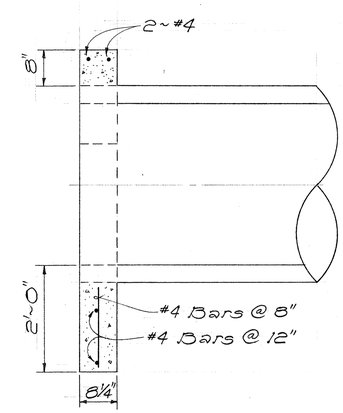

CONCRETE PIPE
Scale: 3/4" = 1'-0"

DETAILS OF CONCRETE HEADWALL @ ℄ STA. 43+50.00, O/S = 100' LT.

ORIGINAL PLAN	SURVEY PLOTTED BY	DATE
	TRACED BY	
	DESIGNED BY	
NOTE BOOK	QUANTITIES BY	
No.	CHECKED BY	

STATE OF HAWAII
DEPARTMENT OF TRANSPORTATION
HIGHWAYS DIVISION

DRAINAGE DETAILS
CONCRETE HEADWALL
@ ℄ STA. 43+50, O/S 100' LT.
INTERSTATE ROUTE H-1
Halawa Heights Road
F.A.I. Proj. No. I-111-1(115):13
Scale: As Noted Date: Dec., 1973
SHEET No. 8H OF 16H SHEETS

FED. ROAD DIST. NO.	STATE	FED. AID PROJ. NO.	FISCAL YEAR	SHEET NO.	TOTAL SHEETS
HAWAII	HAW.	I-H1-1 (115):13	1973	36	53

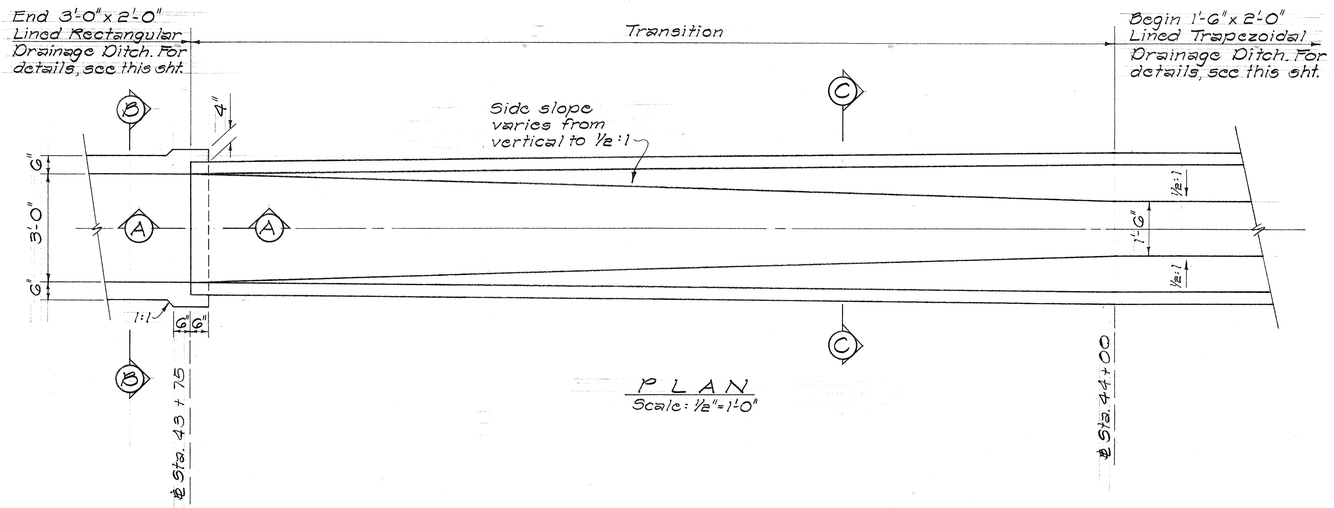

PLAN
Scale: 1/2" = 1'-0"

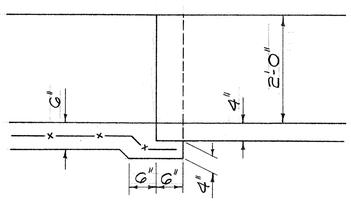

SECTION "A-A"
Scale: 3/4" = 1'-0"

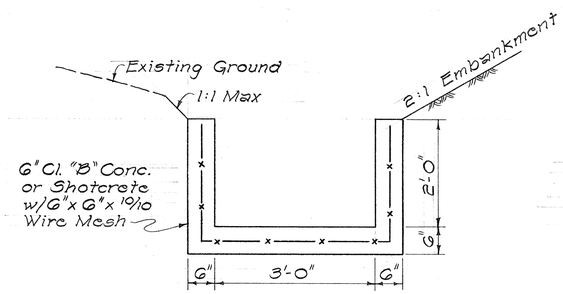

SECTION "B-B"
3' x 2' RECT. LINED DRAINAGE DITCH
Scale: 3/4" = 1'-0"

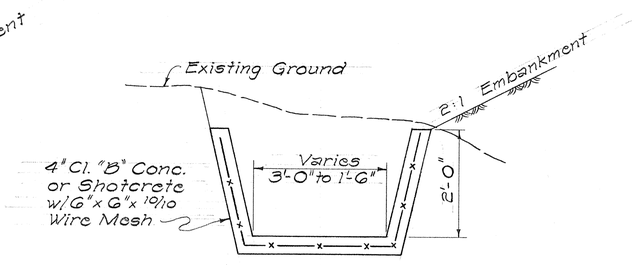

SECTION "C-C"
Scale: 3/4" = 1'-0"

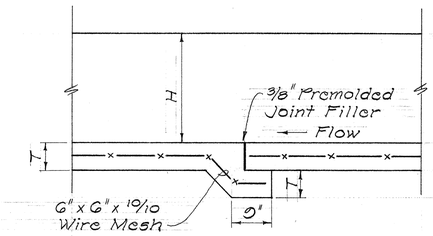

EXPANSION JOINT @ 90' o.c.
Scale: 3/4" = 1'-0"

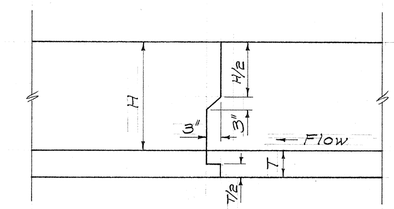

CONSTRUCTION JOINT @ 30' o.c.
Scale: 3/4" = 1'-0"

NOTE: Ditch Transition shall be paid for under the adjacent downstream Ditch type.

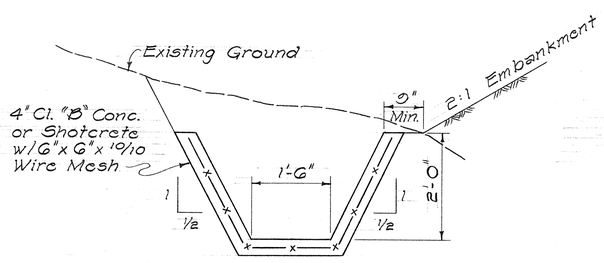

1'-6" x 2'-0" (S:S 1/2:1)
LINED TRAPEZOIDAL DRAINAGE DITCH
Scale: 3/4" = 1'-0"

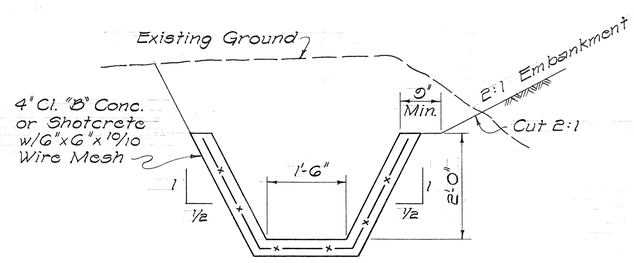

1'-6" x 2'-0" (S:S 1/2:1)
LINED TRAPEZOIDAL DRAINAGE DITCH
Scale: 3/4" = 1'-0"

STATE OF HAWAII
DEPARTMENT OF TRANSPORTATION
HIGHWAYS DIVISION

DRAINAGE DETAILS
LINED DRAINAGE DITCH
℄ STA. 43+50 LT. TO ℄ STA. 45+88 LT.
INTERSTATE ROUTE H-1
Halawa Heights Road
F.A.I. Proj. No. I-H1-1(115):13

Scale: As Noted Date: Dec., 1973

SHEET No. 9H OF 16H SHEETS

ORIGINAL PLAN	SURVEY PLOTTED BY
	DRAWN BY
	TRACED BY
NOTE BOOK	DESIGNED BY
No.	QUANTITIES BY
	CHECKED BY
	DATE

FED. ROAD DIST. NO.	STATE	FED. AID PROJ. NO.	FISCAL YEAR	SHEET NO.	TOTAL SHEETS
HAWAII	HAW.	I-H1-1 (115):13	1973	37	53

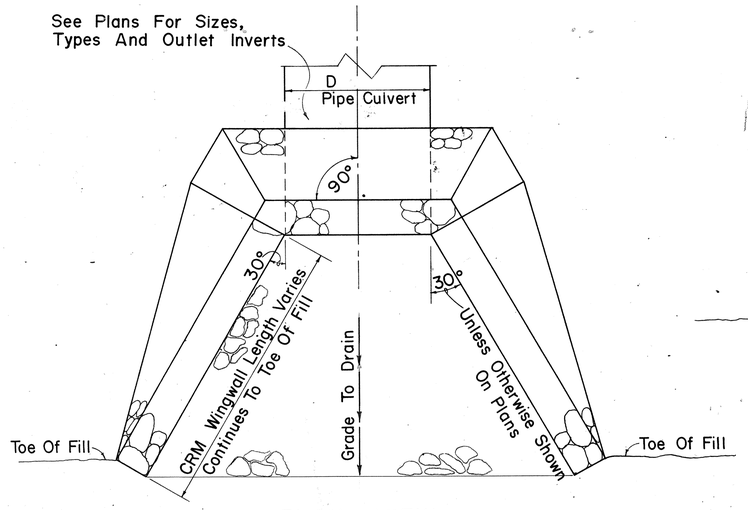

PLAN VIEW

NOTE: When outlet is skewed to embankment slope, the embankment shall be contoured to cover the exposed section of wall and pipe.

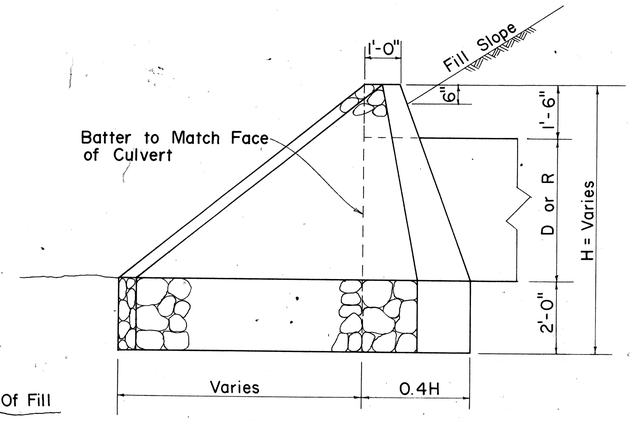

SIDE ELEVATION

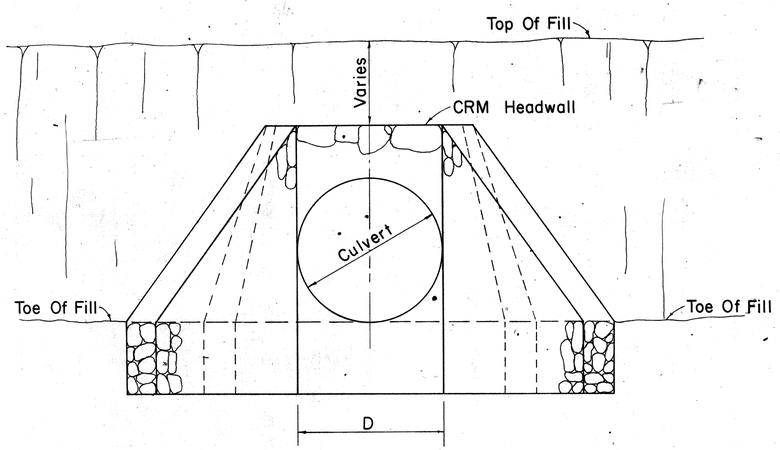

FRONT ELEVATION

DETAILS OF TYPE "A" CRM OUTLET STRUCTURE

Scale: 1/2" = 1'-0"

TABLE A

LOCATION	W
⅊ Sta. 46+00 Lt. to ⅊ Sta. 46+75 Lt.	5'
⅊ Sta. 46+75 Lt. to ⅊ Sta. 47+00 Lt.	Transition
⅊ Sta. 47+00 Lt. to ⅊ Sta. 48+50 Lt.	8'

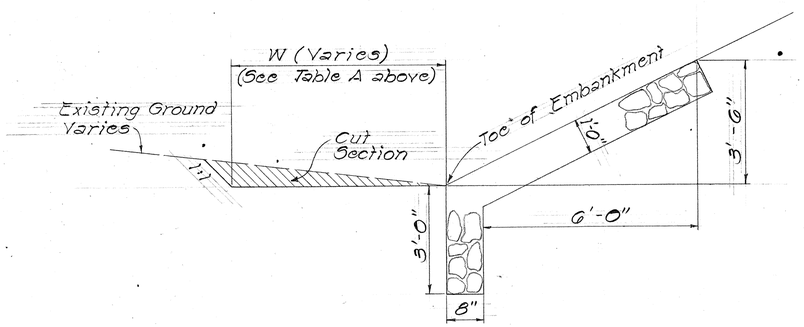

DETAILS OF UNLINED DITCH AND GRP SLOPE PROTECTION AT TOE OF EMBANKMENT (⅊ STA. 46+00 LT. TO ⅊ STA. 48+50 LT.)

Scale: 1/2" = 1'-0"

ORIGINAL PLAN	SURVEY PLOTTED BY	DATE
	DRAWN BY	"
	TRACED BY	"
NOTE BOOK	DESIGNED BY	"
	QUANTITIES BY	"
No.	CHECKED BY	"

STATE OF HAWAII
DEPARTMENT OF TRANSPORTATION
HIGHWAYS DIVISION

DRAINAGE DETAILS
CRM OUTLET STRUCTURE
UNLINED DITCH & GRP SLOPE PROTECTION
INTERSTATE ROUTE H-1
Halawa Heights Road
F.A.I. Proj. No. I-H1-1(115):13

Scale: As Noted Date: Dec., 1973

SHEET No. 10 H OF 16 H SHEETS

FED. ROAD DIST. NO.	STATE	FED. AID PROJ. NO.	FISCAL YEAR	SHEET NO.	TOTAL SHEETS
HAWAII	HAW.	I-H1-1 (115):13	1973	38	53

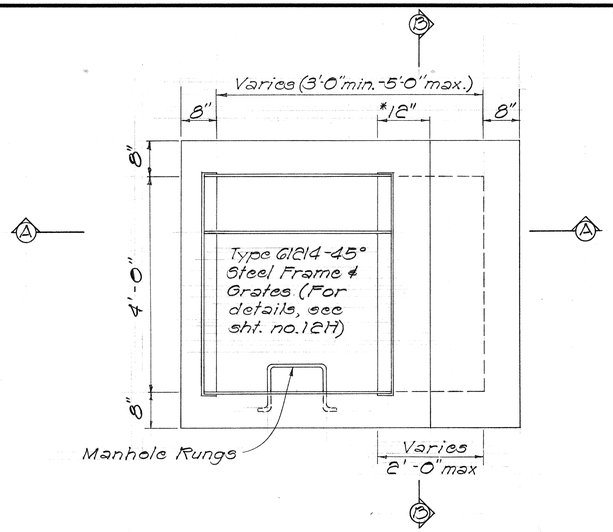

PLAN

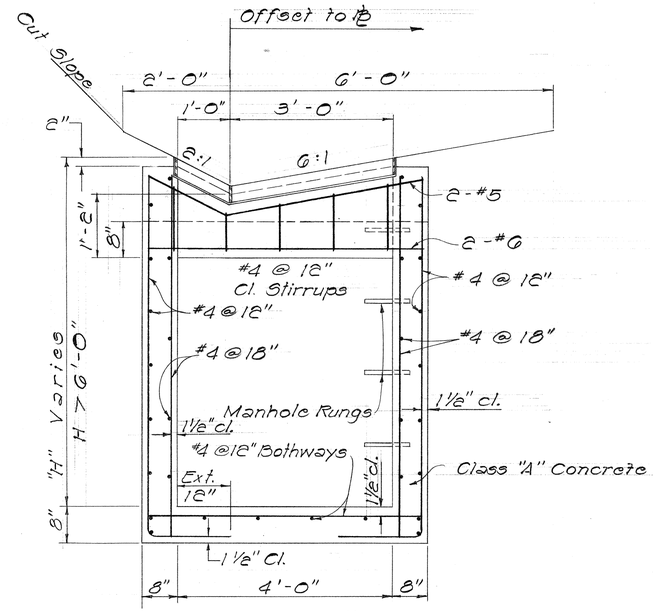

SECTION "B-B"

DETAIL WHEN H >6'-0"

GENERAL NOTES

1. Culverts shall leave Drop Intake from any position and any direction indicated by plans or ordered by the Engineer. Culverts may both enter and leave Drop Intake so that Drop Intake will act as Manhole.
2. Manhole Rungs (16" o.c.) are required when "H" is greater than 4 feet 6 inches. Only one rung (12 inches from the bottom) is required if "H" is 4 feet 6 inches or less. Manhole Rungs may be placed at any location as ordered by the Engineer.

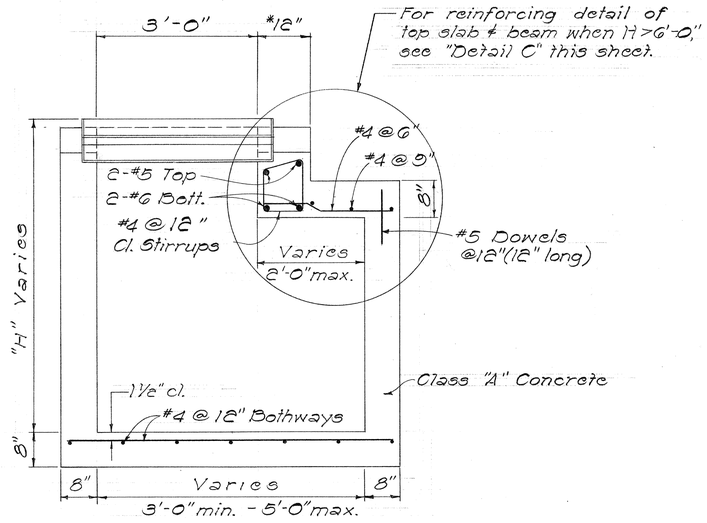

SECTION "A-A"

DETAIL WHEN H ≦ 6'-0"

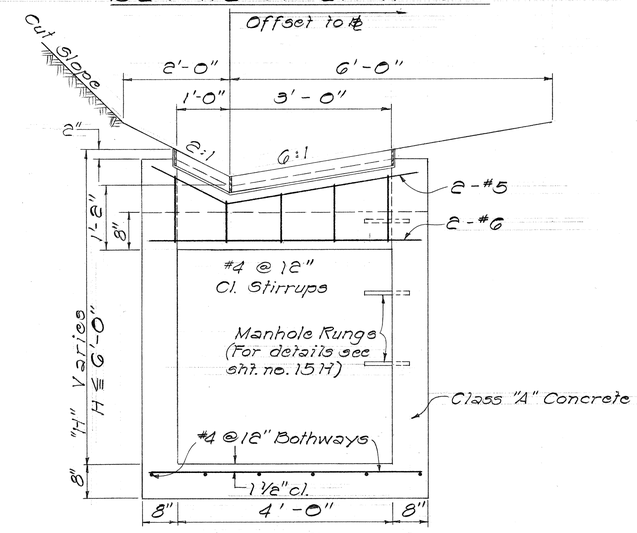

SECTION "B-B"

DETAIL WHEN H ≦ 6'-0"

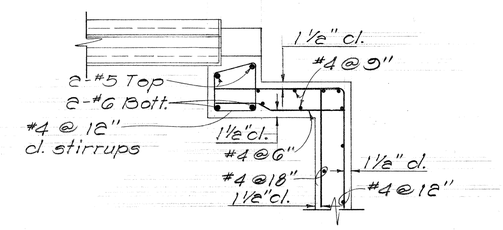

DETAIL "C"

DETAIL OF TOP SLAB & BEAM WHEN H >6'-0"

*For minimum size box of 3'-0" only, use 8" and eliminate reinforcing steel shown in top portion.

DETAILS FOR G1214-45° CONCRETE DROP INTAKE

Scale: 3/4" = 1'-0"

STATE OF HAWAII
DEPARTMENT OF TRANSPORTATION
HIGHWAYS DIVISION

DRAINAGE DETAILS

G1214-45° C.D.I.

INTERSTATE ROUTE H-1
Halawa Heights Road
F.A.I. Proj. No. I-H1-1(115):13

Scale: As Noted Date: Dec., 1973

SHEET No. 11H OF 16H SHEETS

ORIGINAL PLAN	SURVEY PLOTTED BY	DATE
	TRACED BY	
	CHECKED BY	
NOTE BOOK	DESIGNED BY	
	QUANTITIES BY	
No.	CHECKED BY	

FED. ROAD DIST. NO.	STATE	FED. AID PROJ. NO.	FISCAL YEAR	SHEET NO.	TOTAL SHEETS
HAWAII	HAW.	I-171-1 (115):13	1973	30	53

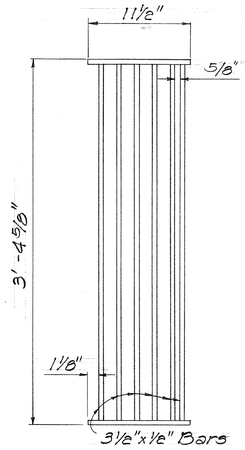

PLAN
Scale: 1½"=1'-0"

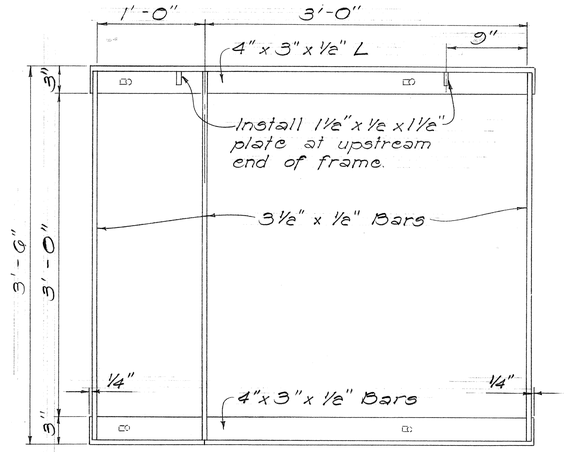

PLAN
Scale: 1½"=1'-0"

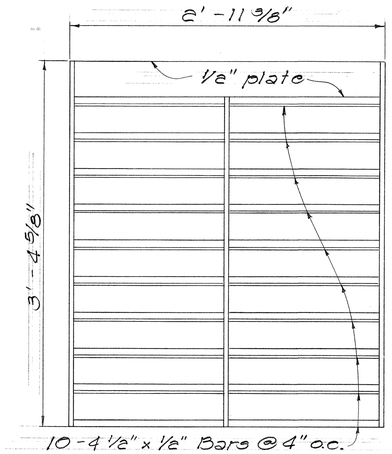

PLAN
Scale: 1½"=1'-0"

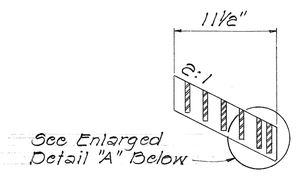

SECTION
Scale: 1½"=1'-0"

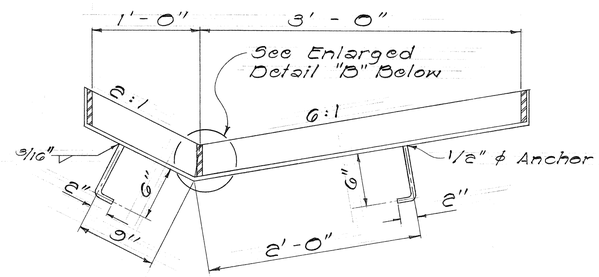

SECTION
Scale: 1½"=1'-0"

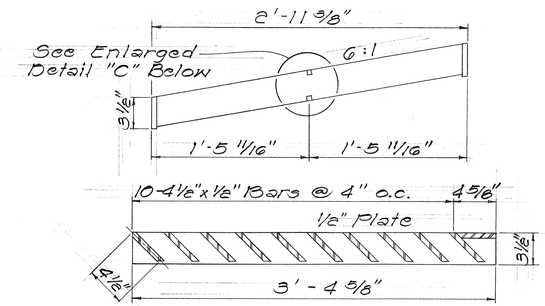

SECTION
Scale: 1½"=1'-0"

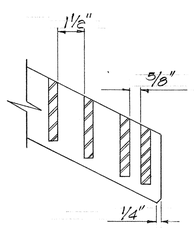

DETAIL "A"
Scale: 3"=1'-0"

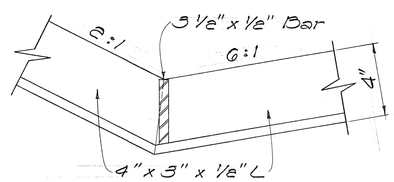

DETAIL "B"
Scale: 3"=1'-0"

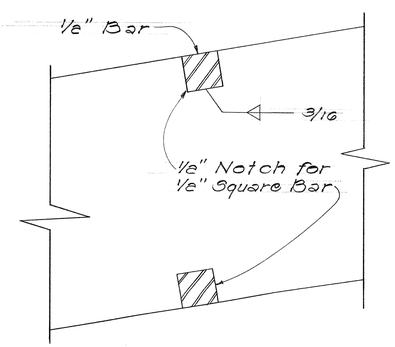

DETAIL "C"
Scale: Full Size

GENERAL NOTES

1. Grates and Frames shall be hot-dip galvanized after fabrication, see specification.
2. All welds 3/8" unless otherwise noted.
3. The Frame and Grate materials shall conform to the specifications of ASTM Designation Structural Steel A283, Grade D and the Standard Specification.

DETAILS OF TYPE 61214-45° STEEL FRAME AND GRATES

STATE OF HAWAII
DEPARTMENT OF TRANSPORTATION
HIGHWAYS DIVISION

DRAINAGE DETAILS
61214-45° STEEL
FRAME AND GRATES
INTERSTATE ROUTE H-1
Halawa Heights Road
F.A.I. Proj. No. I-171-1(115):13

Scale: As Noted Date: Dec., 1973

SHEET No. 12H OF 16H SHEETS

ORIGINAL PLAN	SURVEY PLOTTED BY	DATE
	DRAWN BY	"
	TRACED BY	"
	DESIGNED BY	"
NOTE BOOK	QUANTITIES BY	"
No.	CHECKED BY	"

FED. ROAD DIST. NO.	STATE	FED. AID PROJ. NO.	FISCAL YEAR	SHEET NO.	TOTAL SHEETS
HAWAII	HAW.	I-H1-1 (115):13	1973	40	53

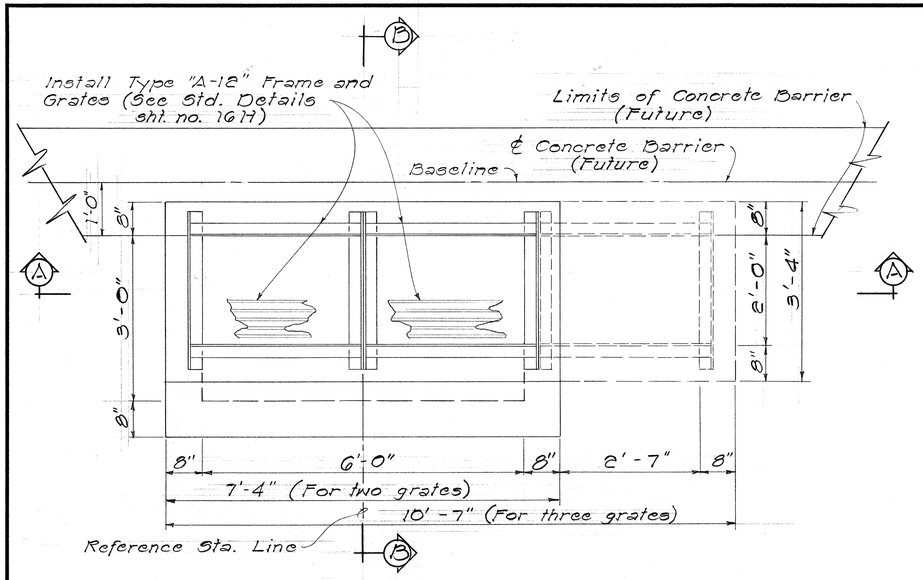

PLAN
Scale: 3/4" = 1'-0"

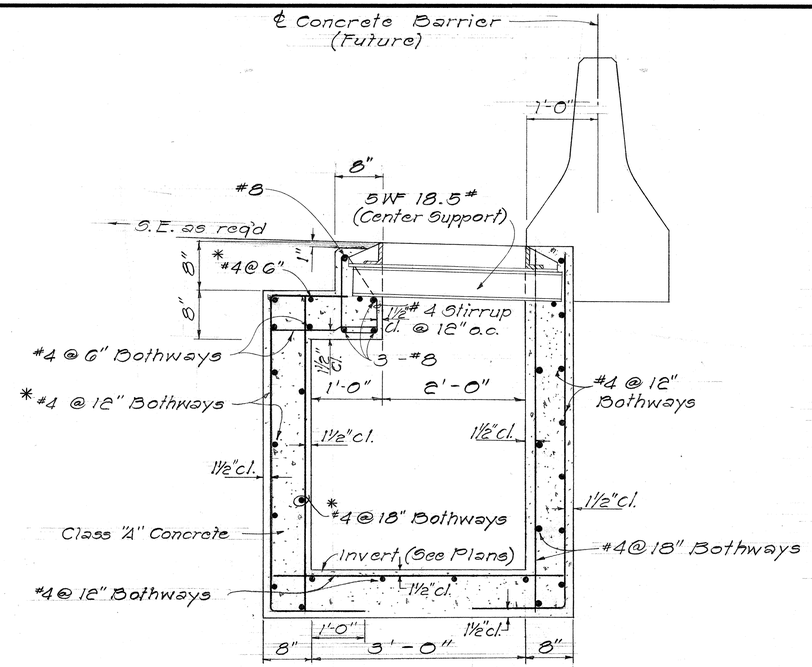

SECTION "B-B"
Scale: 1" = 1'-0"

GENERAL NOTES

1. Culvert shall enter and leave Median C.D.1. from any position and in the direction indicated by the plans or ordered by the Engineer.
2. Manhole Rungs (16"o.c.) are required when "H" is greater than 4 feet 6 inches. Only one rung (12 inches from the bottom) is required if "H" is 4 feet 6 inches or less. Manhole Rungs may be placed at any location as ordered by the Engineer.
3. Center Support Assembly shall be used when two or more gratings are specified and it shall not be paid for separately, but shall be considered incidental to Type "A-12" Frames & Grates.
4. For Median Drop Intakes located in the Concrete Barrier Transition Area, the location shall be parallel to the transition. In all cases, the final location must permit removal of the grates.
5. *Added reinforcing for Drop Intake when "H" exceeds 6'-0".

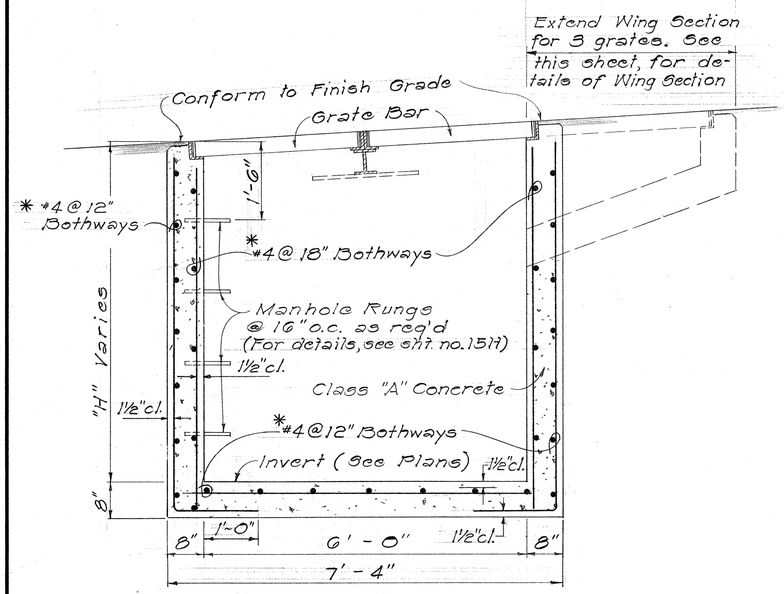

SECTION "A-A"
Scale: 3/4" = 1'-0"

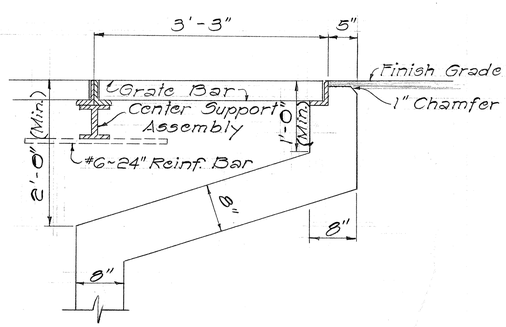

TYPICAL SECTIONS FOR WING
Scale: 1" = 1'-0"

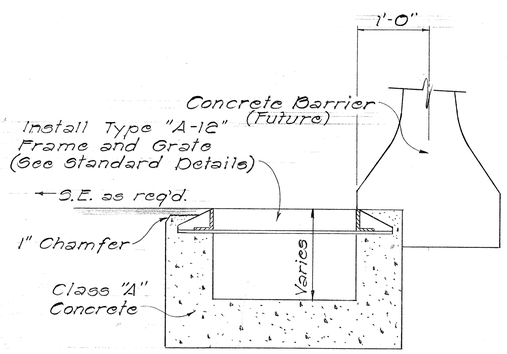

TYPICAL - DETAILS FOR MEDIAN C.D.1.

STATE OF HAWAII
DEPARTMENT OF TRANSPORTATION
HIGHWAYS DIVISION

DRAINAGE DETAILS
MEDIAN C.D.1.

INTERSTATE ROUTE H-1
Halawa Heights Road
F.A.I. Proj. No. I-H1-1(115):13

Scale: As Noted Date: Dec., 1973

SHEET No. 13-H OF 16-H SHEETS

ORIGINAL PLAN	SURVEY PLOTTED BY	DATE
	DRAWN BY	
	TRACED BY	
	DESIGNED BY	
NOTE BOOK	QUANTITIES BY	
No.	CHECKED BY	

FED. ROAD DIST. NO.	STATE	FED. AID. PROJECT	FISCAL YEAR	SHEET NO.	TOTAL SHEETS
HAWAII	HAWAII	F-771-1 (115):13	1973	41	53

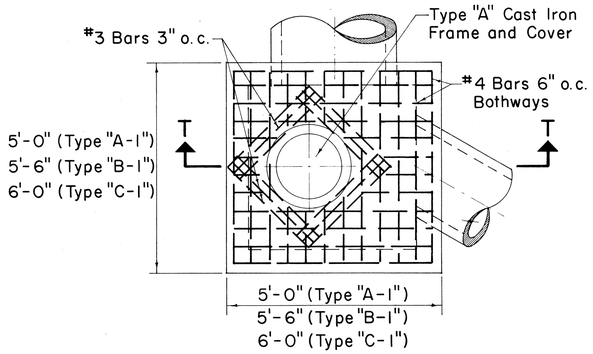

PLAN

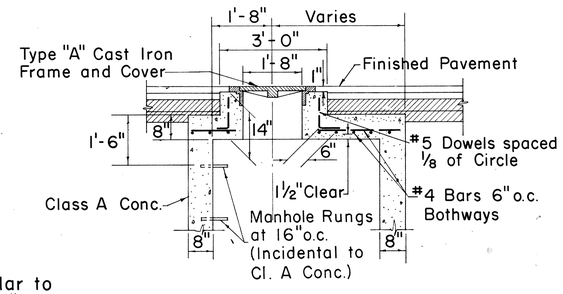

Note:
Bottom detail similar to Type "A", "B", & "C".

SECTION T-T

TYPE "A-1", "B-1", & "C-1" STORM DRAIN MANHOLE TOP DETAIL UNDER PAVEMENT

Scale: ½" = 1'-0"

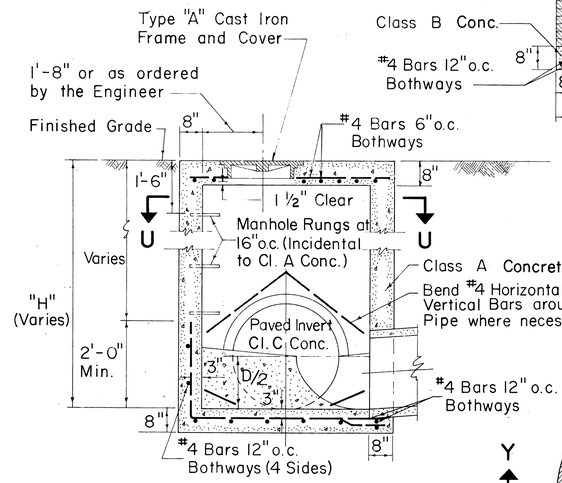

SECTION V-V

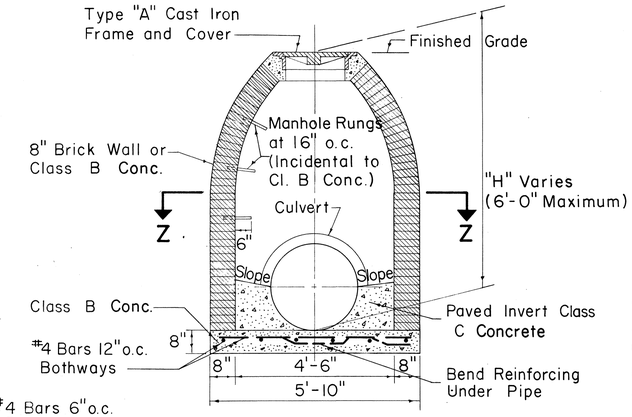

SECTION Y-Y

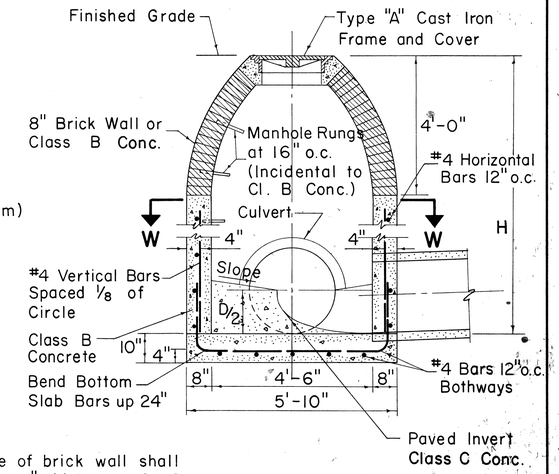

SECTION X-X

NOTE:

1. Exterior surface of brick wall shall be plastered with 1" thickness of 1:2 Cement Mortar.
2. Number, size and direction of culvert at manhole to be as shown on plans.
3. Paved invert not required at drop manholes.
4. All Class C Concrete to be incidental to Class B Concrete.

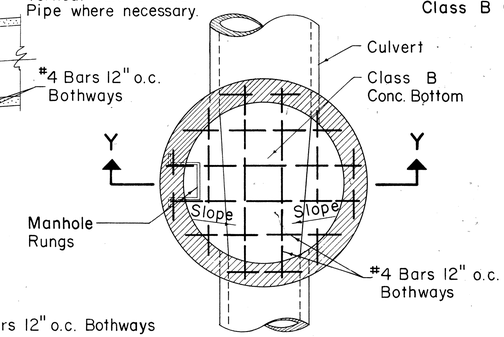

SECTION Z-Z

TYPE "D" STORM DRAIN MANHOLE

Scale: ½" = 1'-0"

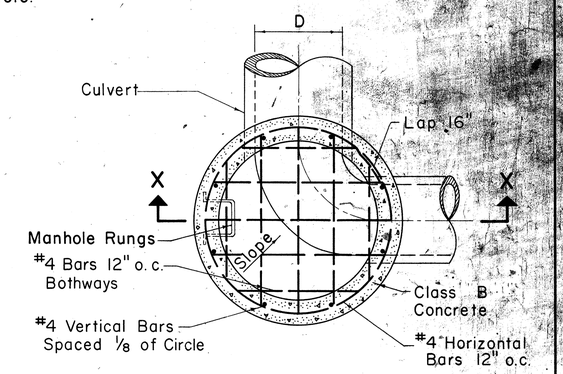

SECTION W-W

TYPE "E" STORM DRAIN MANHOLE

Scale: ½" = 1'-0"

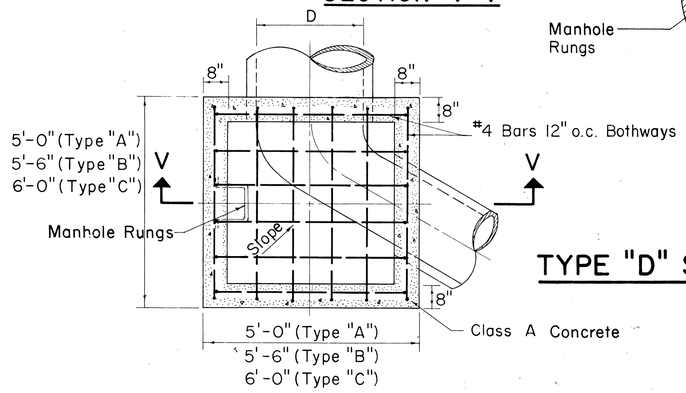

SECTION U-U

TYPE "A", "B", & "C" S.D.M.H.

Scale: ½" = 1'-0"

GENERAL NOTES

1. Culvert shall enter and leave S.D.M.H. from any position and in the direction indicated by the plans or ordered by the Engineer.
2. Manhole Rungs (16" o.c.) are required when "H" is greater than 4'-6". Only one rung (12" from the bottom) is required if "H" is 4'-6" or less. Type "A" C.I. Frame and Cover and Manhole Rungs may be placed at any location as ordered by the Engineer.

APPROVAL RECOMMENDED:
G. Yatano — 12-17-69
HYDRAULIC DESIGN ENGINEER — DATE

APPROVED:
[illegible] — 12-17-69
ASS'T. CHIEF, ENGINEERING — DATE

NO.	REVISION	APPROVED BY	DATE

STATE OF HAWAII
DEPARTMENT OF TRANSPORTATION
HIGHWAYS DIVISION

STANDARD DETAILS

STORM DRAIN MANHOLES

Scales: As Noted — Date: July, 1969

SHEET NO. 14H OF 16H SHEETS — DH 5

FED. ROAD DIST. NO.	STATE	FED. AID PROJ. NO.	FISCAL YEAR	SHEET NO.	TOTAL SHEETS
HAWAII	HAW.	I-77-1 (115):13	1973	42	53

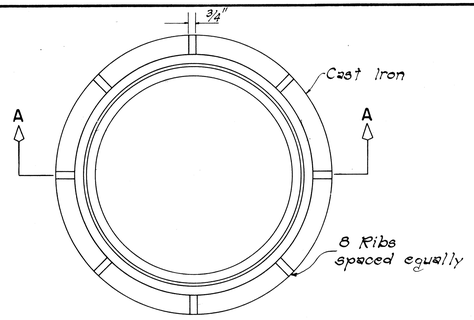

PLAN

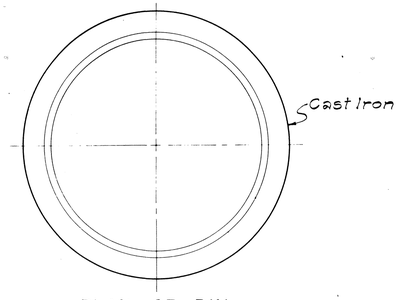

PLAN OF RIM

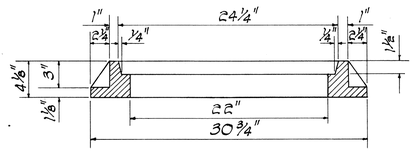

SECTION A-A

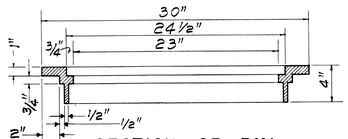

SECTION OF RIM

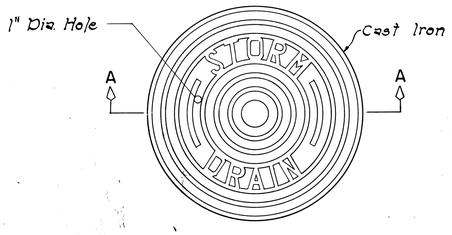

PLAN

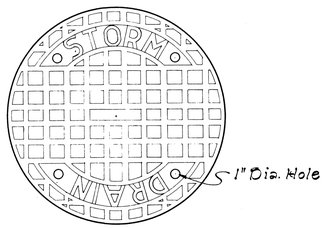

TOP VIEW OF COVER

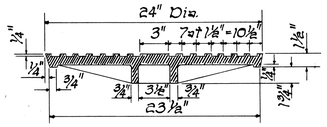

SECTION A-A

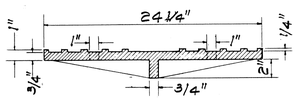

SECTION

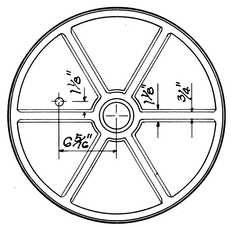

BOTTOM VIEW OF COVER

DETAILS OF TYPE "P" CAST IRON FRAME AND COVER

SCALE: 1-1/2" = 1'-0"

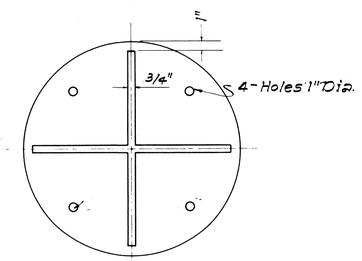

BOTTOM VIEW OF COVER

DETAILS OF TYPE "B" CAST IRON FRAME AND COVER

SCALE: 1-1/2" = 1'-0"

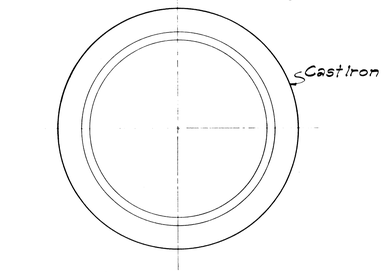

PLAN OF RIM

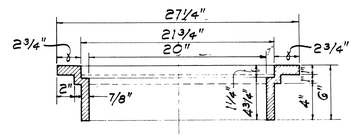

SECTION OF RIM

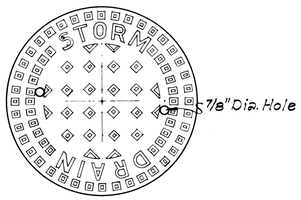

TOP VIEW OF COVER

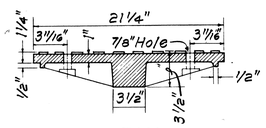

SECTION

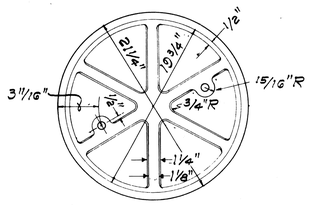

BOTTOM VIEW OF COVER

DETAILS OF TYPE "A" CAST IRON FRAME AND COVER

SCALE: 1-1/2" = 1'-0"

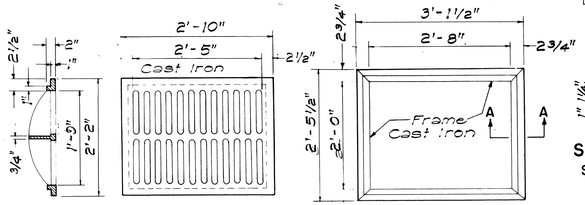

SECTION TOP VIEW TOP VIEW

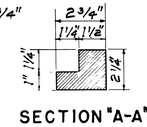

SECTION "A-A"
SCALE 3" = 1'-0"

TYPE C C.I. FRAME AND GRATE

SCALE: 3/4" = 1'-0"

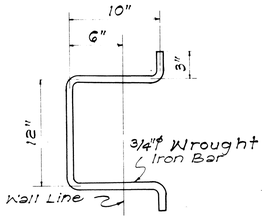

MANHOLE RUNG

SCALE: 1-1/2" = 1'-0"

APPROVAL RECOMMENDED:
G. Takano — HYDRAULIC DESIGN ENGINEER — DATE 12-17-69

APPROVED:
[illegible] — ASSISTANT CHIEF, ENGINEERING — DATE 12-17-69

NO.	REVISION	APPROVED BY	DATE
1.	Detail of Type "P" Cast Iron Frame and Cover	H.T.	1-6-71

STATE OF HAWAII
DEPARTMENT OF TRANSPORTATION
HIGHWAYS DIVISION

STANDARD DETAILS
CATCH BASIN AND MANHOLE CASTINGS

Scale: As Noted — Date: July, 1969

SHEET No. 15H OF 16H SHEETS — DH 6

ORIGINAL PLAN	SURVEY PLOTTED BY:	DATE:
	DESIGNED BY:	"
	DRAWN BY:	"
NOTE BOOK	TRACED BY: J. Calistro	"
	QUANTITIES BY:	"
No.	CHECKED BY:	"

FED. ROAD DIST. NO.	STATE	FED. AID PROJ. NO.	FISCAL YEAR	SHEET NO.	TOTAL SHEETS
HAWAII	HAW.	I-H1-1 (115)-13	1973	43	53

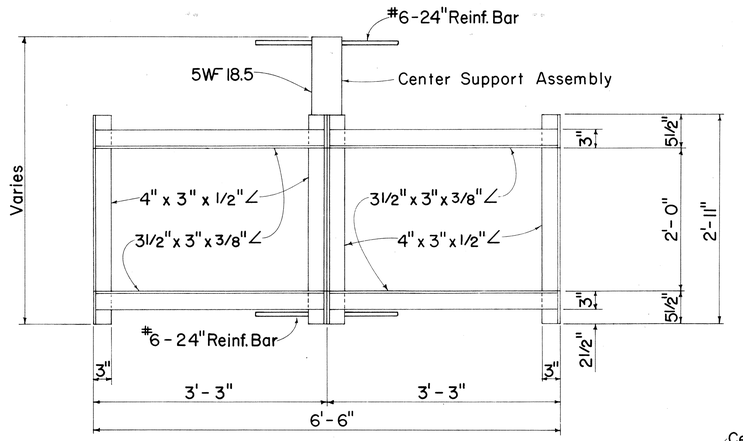

PLAN
(Two or More Grates)

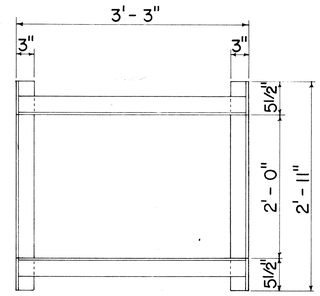

PLAN
(Single Grate)

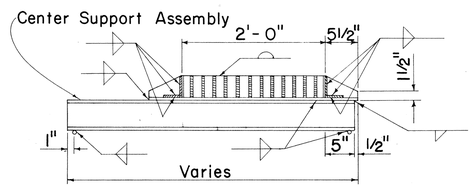

CROSS SECTION
(Thru Frame & Grate)

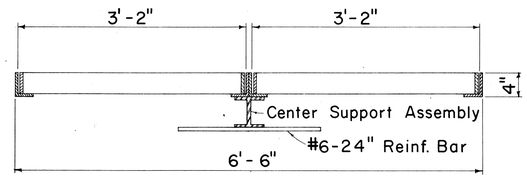

LONGITUDINAL SECTION
(Thru Frame & Grate)

FRAME DETAILS

Scale: 1" = 1'-0"

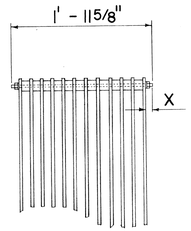

BOLTED END BLOCK
Scale: 1" = 1'-0"

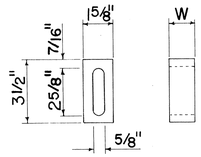

BAR SPACER
Scale: 3" = 1'-0"

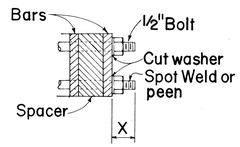

BOLTING DETAIL
Scale: 3" = 1'-0"

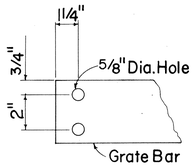

END OF BAR
Scale: 3" = 1'-0"

ALTERNATIVE BOLTED GRATE

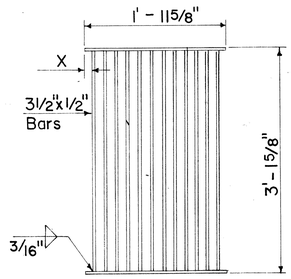

PLAN

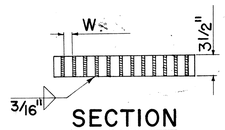

SECTION

ALTERNATIVE WELDED GRATE

Scale: 1" = 1'-0"

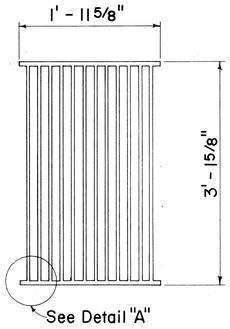

PLAN
Scale: 1" = 1'-0"

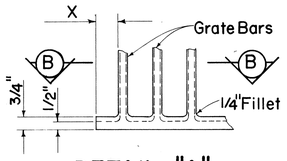

DETAIL "A"
Scale: 3" = 1'-0"

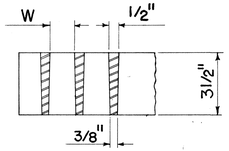

SECTION "B-B"
Scale: 3" = 1'-0"

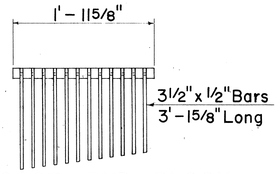

CAST END BLOCK
Scale: 1" = 1'-0"

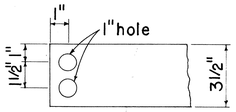

END OF BAR
Scale: 3" = 1'-0"

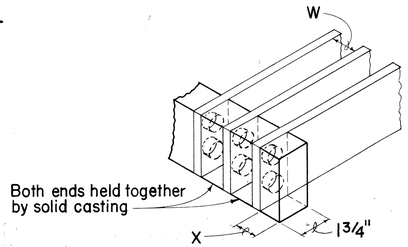

ALTERNATIVE CAST MALLEABLE IRON OR CAST STEEL GRATE

ALTERNATIVE CAST MALLEABLE IRON OR CAST STEEL END BLOCK GRATE

GENERAL NOTES

1. Contractor has the option of using cast malleable iron, cast steel, welded, bolted, cast malleable iron end block or cast steel end block grate.
2. Grates and Frames shall be hot dip galvanized after fabrication, see specifications.
3. All welds 3/8" unless otherwise noted.
4. Center support assembly shall be used when two or more grates are specified. Incidental to Types A-9 or A-12 Frame and Grates.
5. Refer to "Grate Bar Spacing Table" for Types A-9 and A-12 Grate dimensions.
6. The various materials shall conform to the specifications of ASTM as listed in the following tabulation and the Std. Specifications.

Material	ASTM Designation
Structural Steel	A283, Grade D
Cast Steel	A27, Grade 65-35
Malleable Iron Casting	A47, Gr. No. 35018

GRATE BAR SPACING TABLE

TYPE	NO. BARS	CLEAR BAR SPACING - W	X
A-9	9	2"	1 9/16"
A-12	12	1 3/8"	1 1/4"

NOTE:
1. Type A-9 – Use in locations off the roadbed on all types of highways.
2. Type A-12 – Use within the roadbed on all types of highways.

APPROVAL RECOMMENDED:
G. Takano — 12-17-69
HYDRAULIC DESIGN ENGINEER — DATE

APPROVED:
[illegible] — 12-17-69
ASSISTANT CHIEF, ENGINEERING — DATE

NO.	REVISION	APPROVED BY	DATE

STATE OF HAWAII
DEPARTMENT OF TRANSPORTATION
HIGHWAYS DIVISION

STANDARD DETAILS

TYPE A-9 AND A-12 FRAMES AND GRATES

Scales: As Noted — Date: Aug. 1968

SHEET No. 16H OF 16H SHEETS — DH 7

ORIGINAL PLAN		DATE
	SURVEY PLOTTED BY	
	DRAWN BY L.C.L.M.	7/68
	TRACED BY L.C.A.T.	8/68
	DESIGNED BY H.K.M.	7/68
NOTE BOOK	QUANTITIES BY	
No.	CHECKED BY H.K.M.	8/68