FED. ROAD DIST. NO.	STATE	FED. AID PROJ. NO.	FISCAL YEAR	SHEET NO.	TOTAL SHEETS
HAWAII	HAW.	I-H1-1(46):8	1973	29	104

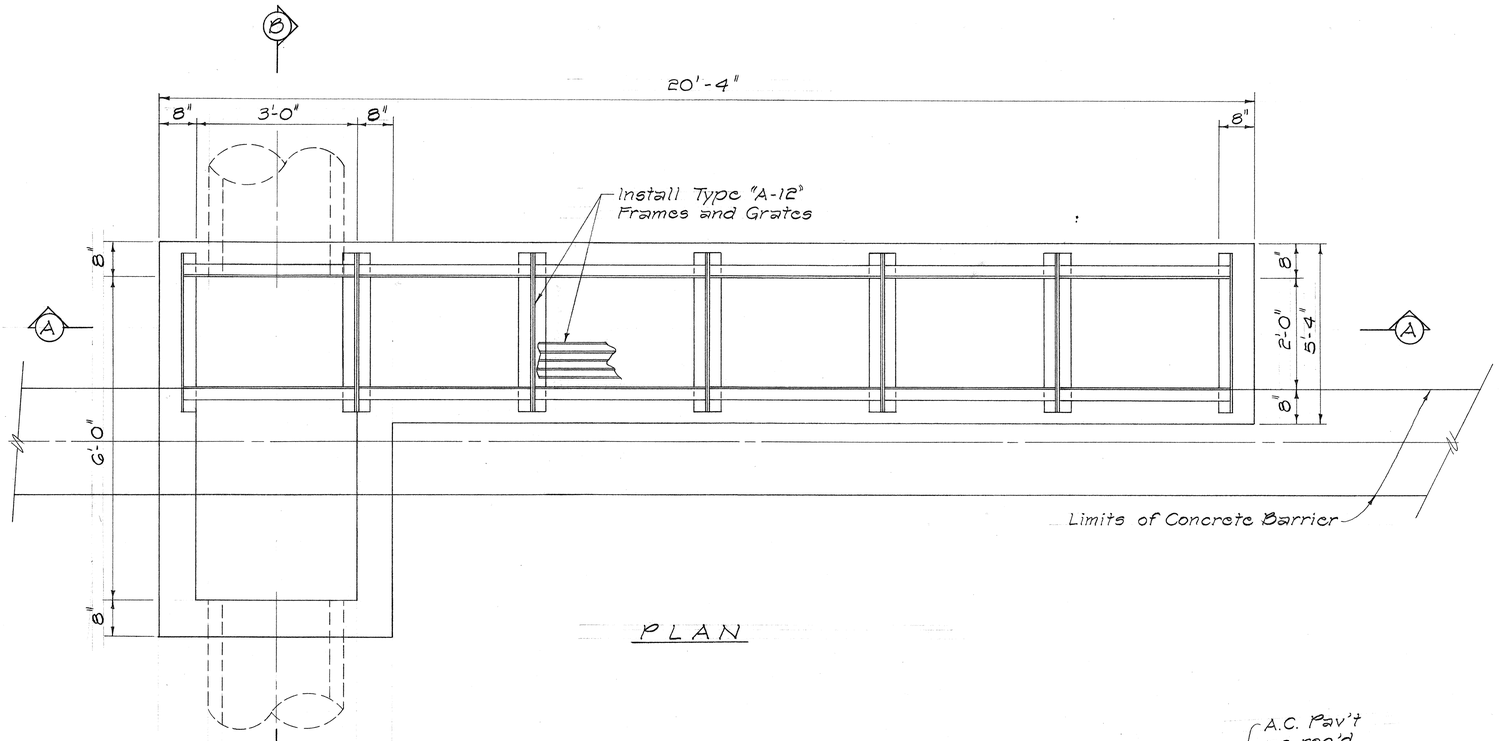

PLAN

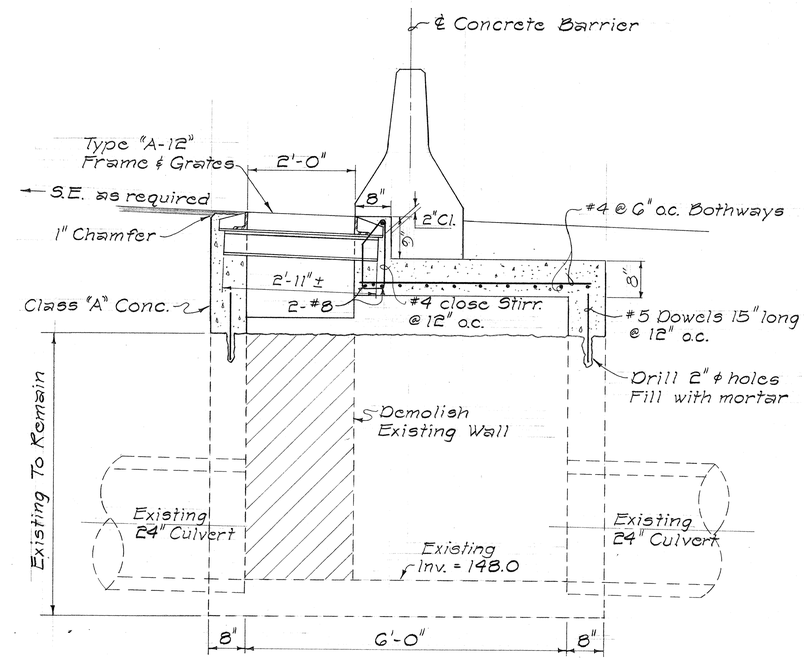

SECTION "B-B"

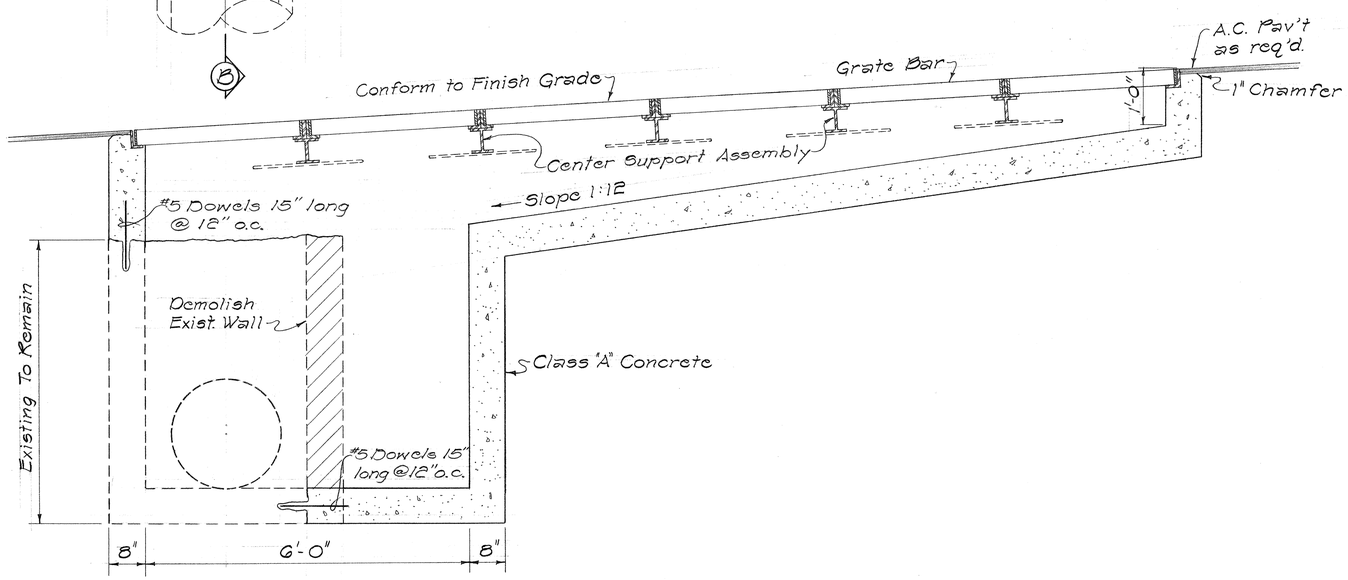

SECTION "A-A"

RECONSTRUCTED CDI AT O.B. STA. 440 + 00 RT.

ORIGINAL PLAN	SURVEY PLOTTED BY	DATE
	DRAWN BY	
	TRACED BY	
	DESIGNED BY	
NOTE BOOK	QUANTITIES BY	
No.	CHECKED BY	

STATE OF HAWAII
DEPARTMENT OF TRANSPORTATION
HIGHWAYS DIVISION

DRAINAGE DETAILS

INTERSTATE ROUTE H-1
Waiawa Interchange
F.A.I. Proj. No. I-H1-1(46):8
(PAVING OF H-2 CONNECTION)

Scale: 3/4" = 1'-0" Date: Feb., 1973

SHEET No. 1 OF 6 SHEETS

2000

K+E CRYSTALENE® TRACING PAPER

FED. ROAD DIST. NO.	STATE	FED. AID PROJ. NO.	FISCAL YEAR	SHEET NO.	TOTAL SHEETS
HAWAII	HAW.	I-H1-1(46)8	1973	203-1	104

NO. OF GRATES	L	L'
3	10' ~ 7"	3' ~ 3"
4	13' ~ 10"	6' ~ 6"
5	17' ~ 1"	9' ~ 9"
6	20' ~ 4"	13' ~ 0"

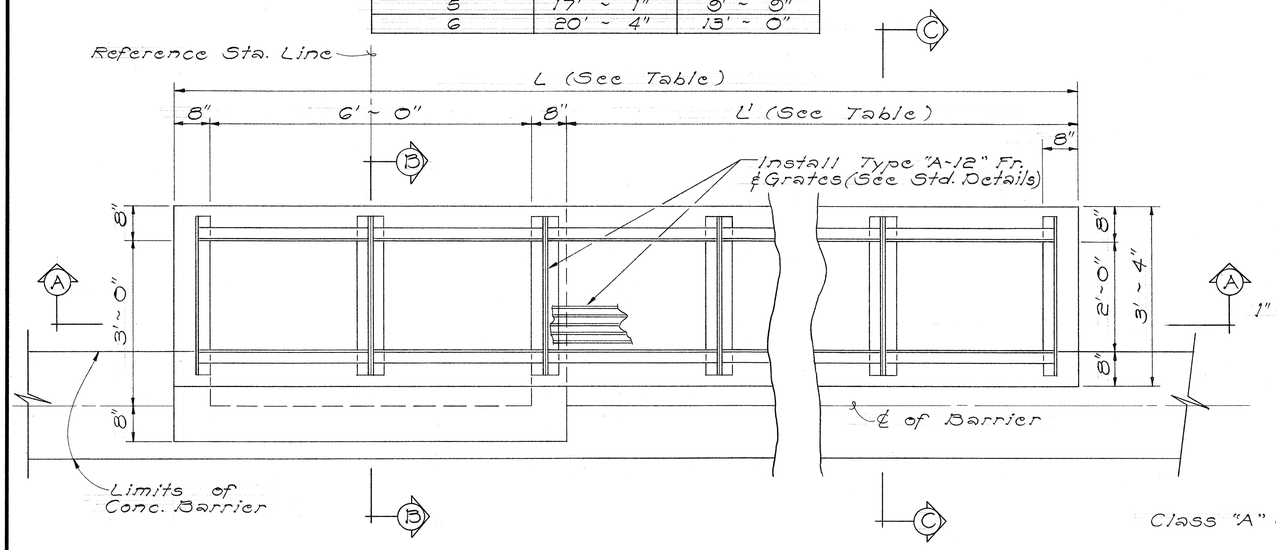

PLAN
Scale: 3/4" = 1'~0"

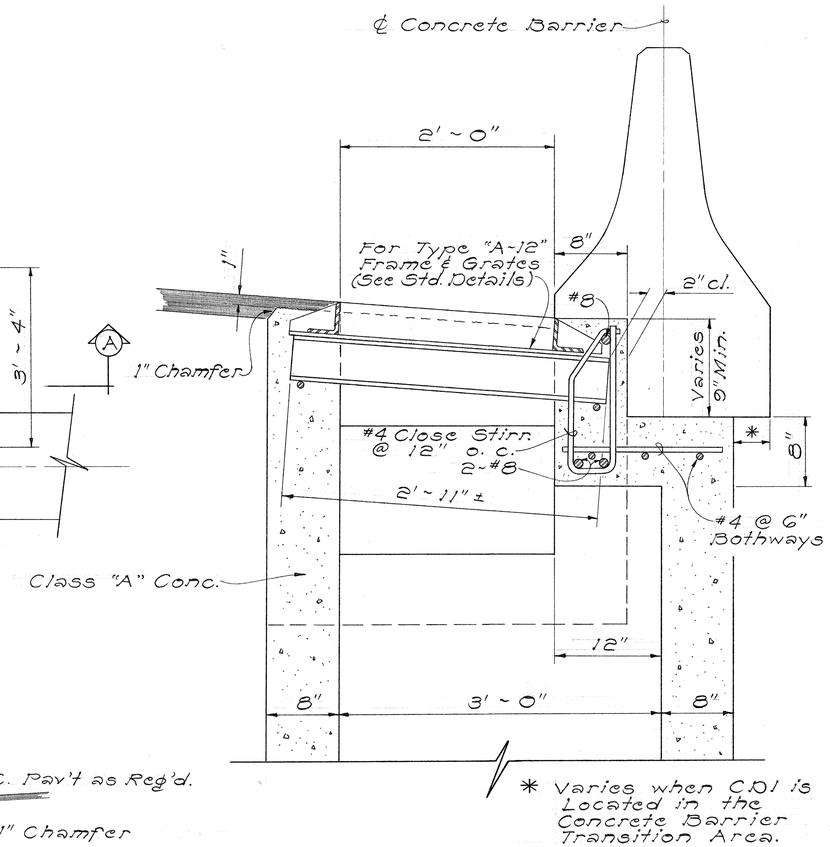

* Varies when C.D.I is Located in the Concrete Barrier Transition Area.

SECTION "B~B"
Scale: 1 1/2" = 1' ~ 0"

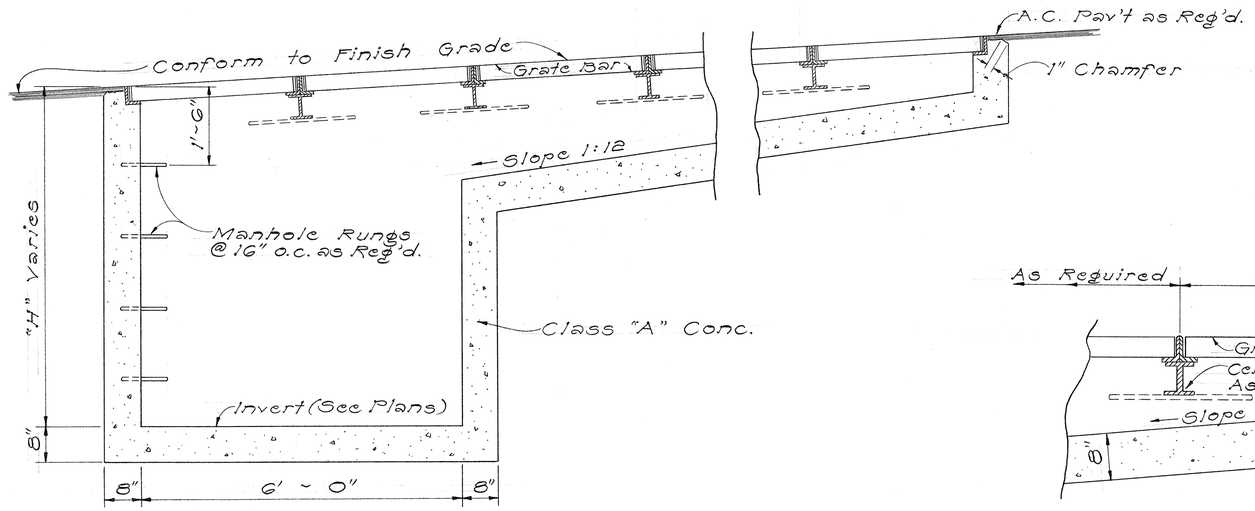

SECTION "A~A"
Scale: 3/4" = 1' ~ 0"

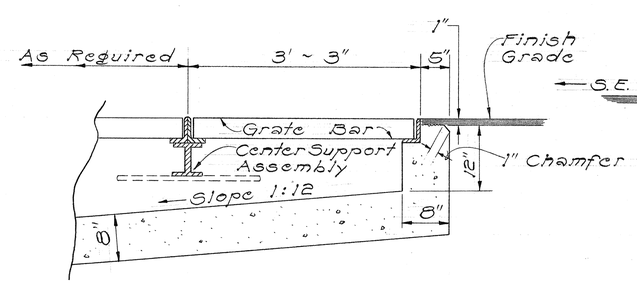

TYPICAL SECTION OF WING
Scale: 1" = 1' ~ 0"

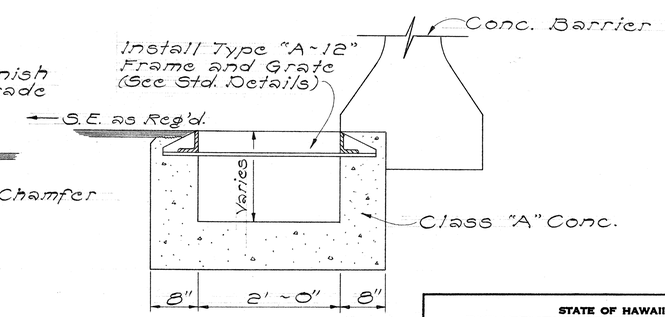

SECTION "C~C"
Scale: 1" = 1' ~ 0"

GENERAL NOTES

1. Culvert shall enter and leave Median C.D.I. from any position and in the direction indicated by the plans or ordered by the Engineer.
2. Manhole Rungs (16" o.c.) are required when "H" is greater than 4 feet 6 inches. Only one rung (12 inches from the bottom) is required if "H" is 4 feet 6 inches or less. Manhole Rungs may be placed at any location as ordered by the Engineer.
3. Center Support Assembly shall be used when two or more gratings are specified and it shall not be paid for separately, but shall be considered incidental to Type "A-12" Frame & Grates.
4. For Median Drop Intakes located in the Concrete Barrier Transition Area, the location shall be parallel to the transition. In all cases, the final location must permit removal of the grates.

TYPICAL DETAILS FOR MEDIAN C.D.I. WITH THREE (3) OR MORE GRATES

STATE OF HAWAII
DEPARTMENT OF TRANSPORTATION
HIGHWAYS DIVISION

DRAINAGE DETAILS

I-H2 CONNECTION
WAIAWA INTERCHANGE
F.A.I. PROJ. NO. I-H1-1(46):8

Scale: As Shown Date: Feb., 1974

SHEET No. 1A OF 6 SHEETS

ORIGINAL PLAN | SURVEY PLOTTED BY | DRAWN BY | TRACED BY | DESIGNED BY | QUANTITIES BY | CHECKED BY | DATE | NOTE BOOK No.

C.O. 200 S-1

FED. ROAD DIST. NO.	STATE	FED. AID PROJ. NO.	FISCAL YEAR	SHEET NO.	TOTAL SHEETS
HAWAII	HAW.	HI-1(4G)-8	1973	30	204

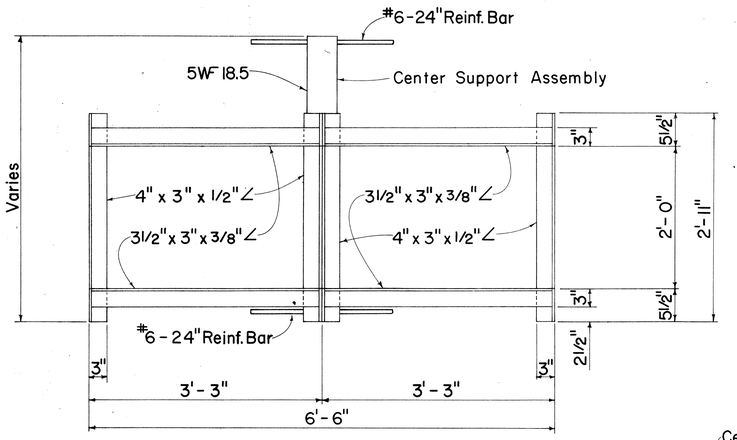

PLAN
(Two or More Grates)

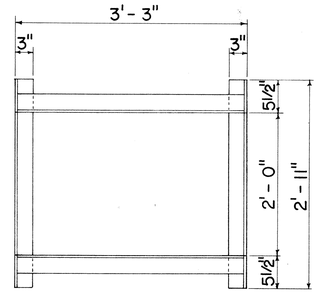

PLAN
(Single Grate)

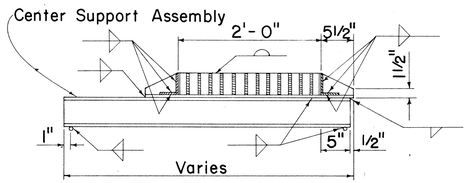

CROSS SECTION
(Thru Frame & Grate)

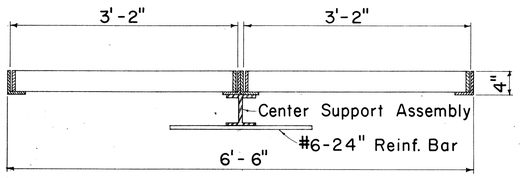

LONGITUDINAL SECTION
(Thru Frame & Grate)

FRAME DETAILS

Scale: 1" = 1'-0"

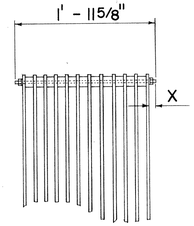

BOLTED END BLOCK
Scale: 1" = 1'-0"

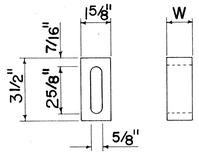

BAR SPACER
Scale: 3" = 1'-0"

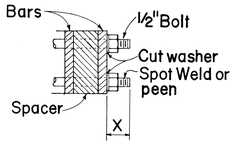

BOLTING DETAIL
Scale: 3" = 1'-0"

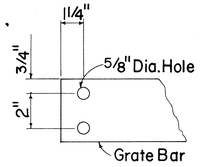

END OF BAR
Scale: 3" = 1'-0"

ALTERNATIVE BOLTED GRATE

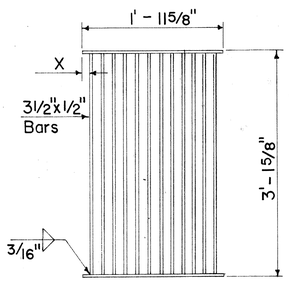

PLAN

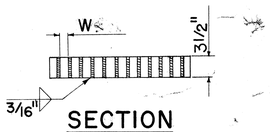

SECTION

ALTERNATIVE WELDED GRATE

Scale: 1" = 1'-0"

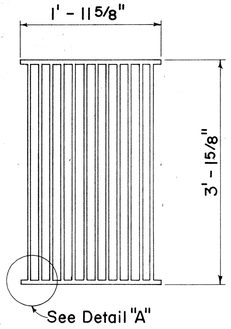

PLAN
Scale: 1" = 1'-0"

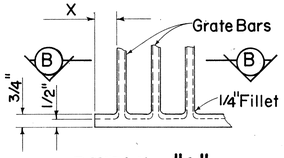

DETAIL "A"
Scale: 3" = 1'-0"

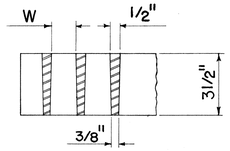

SECTION "B-B"
Scale: 3" = 1'-0"

ALTERNATIVE CAST MALLEABLE IRON OR CAST STEEL GRATE

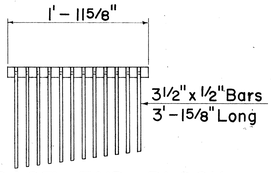

CAST END BLOCK
Scale: 1" = 1'-0"

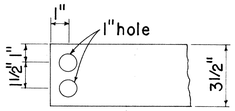

END OF BAR
Scale: 3" = 1'-0"

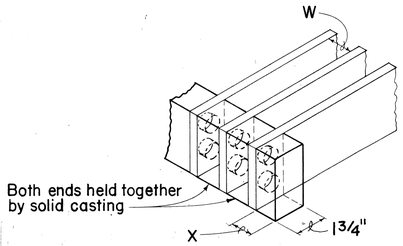

ALTERNATIVE CAST MALLEABLE IRON OR CAST STEEL END BLOCK GRATE

GENERAL NOTES

1. Contractor has the option of using cast malleable iron, cast steel, welded, bolted, cast malleable iron end block or cast steel end block grate.
2. Grates and Frames shall be hot dip galvanized after fabrication, see specifications.
3. All welds 3/8" unless otherwise noted.
4. Center support assembly shall be used when two or more grates are specified. Incidental to Types A-9 or A-12 Frame and Grates.
5. Refer to "Grate Bar Spacing Table" for Types A-9 and A-12 Grate dimensions.
6. The various materials shall conform to the specifications of ASTM as listed in the following tabulation and the Std. Specifications.

Material	ASTM Designation
Structural Steel	A283, Grade D
Cast Steel	A27, Grade 65-35
Malleable Iron Casting	A47, Gr. No. 35018

GRATE BAR SPACING TABLE			
TYPE	NO. BARS	CLEAR BAR SPACING - W	X
A-9	9	2"	1 9/16"
A-12	12	1 3/8"	1 1/4"

NOTE:

1. Type A-9 – Use in locations off the roadbed on all types of highways.
2. Type A-12 – Use within the roadbed on all types of highways.

APPROVAL RECOMMENDED:
T. Takaoka — 12-17-69
HYDRAULIC DESIGN ENGINEER — DATE

APPROVED:
[signature] — 12-17-69
ASSISTANT CHIEF, ENGINEERING — DATE

NO.	REVISION	APPROVED BY	DATE

STATE OF HAWAII
DEPARTMENT OF TRANSPORTATION
HIGHWAYS DIVISION

STANDARD DETAILS

TYPE A-9 AND A-12
FRAMES AND GRATES

Scales: As Noted — Date: Aug. 1968

SHEET No. 2 OF 6 SHEETS — DH 7

ORIGINAL PLAN	SURVEY PLOTTED BY	DATE
	TRACED BY L.C.A.M.	7/68
	DESIGNED BY L.C.A.T.	8/68
NOTE BOOK	DESIGNED BY H.K.N.	7/68
	QUANTITIES BY	
No.	CHECKED BY J.K.M.	8/68

201

FED. ROAD DIST. NO.	STATE	FED. AID PROJ. NO.	FISCAL YEAR	SHEET NO.	TOTAL SHEETS
HAWAII	HAW.	I-HI-1(46)8	1973	31	104

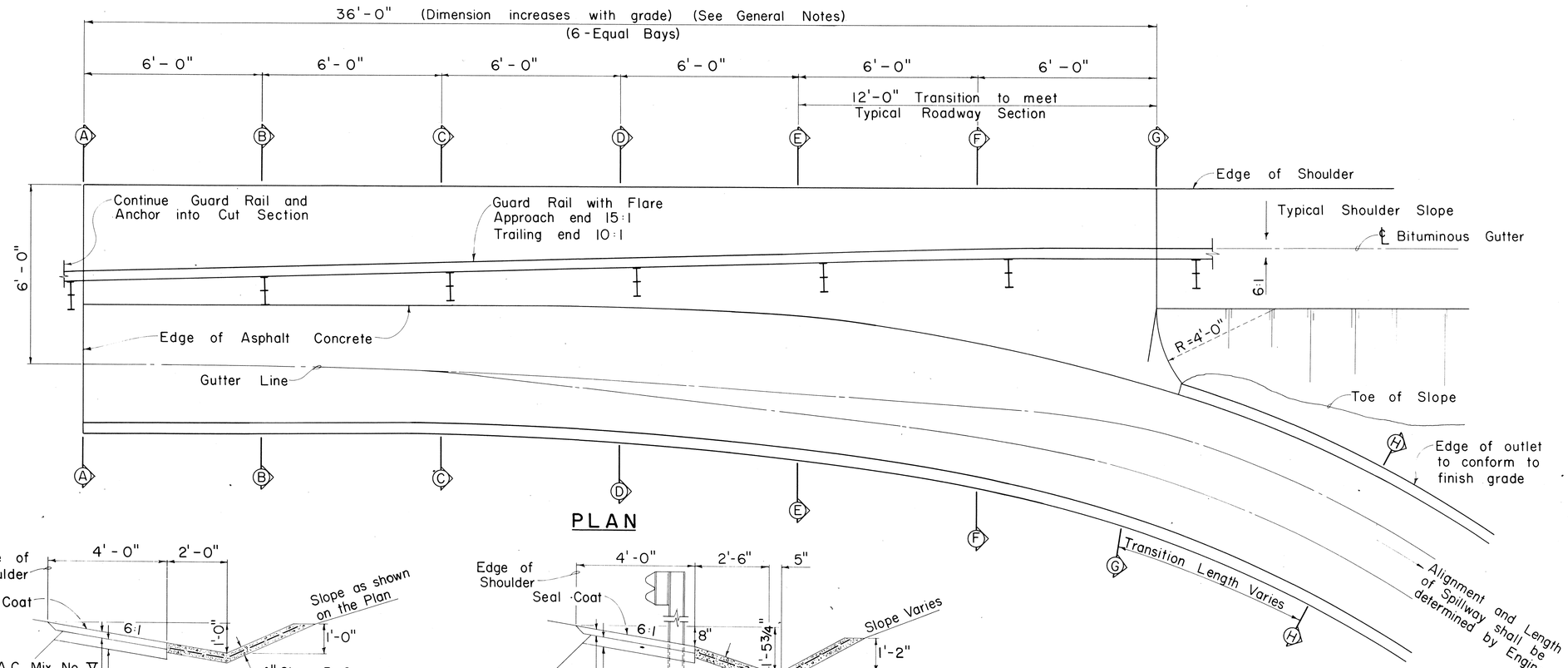

PLAN

GENERAL NOTES

1. If the average grade of pavement for the distance from Section A-A to Section G-G exceeds 2% this distance shall be increased 6' for each 1% increase in grade.
2. Wire Mesh Reinforcement to be incidental to Class B Concrete or Shotcrete.
3. The gutter will be paid for at the contract unit price per linear foot for Asphalt Concrete Gutter, Type 7.
4. 4" Aggregate Base to be incidental to Asphalt Concrete Gutter.

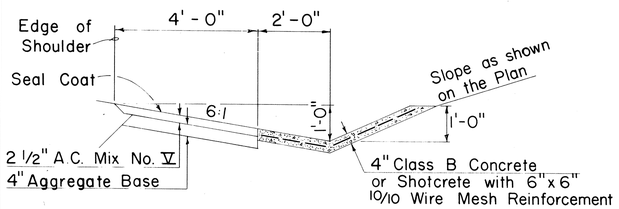

SECTION A-A

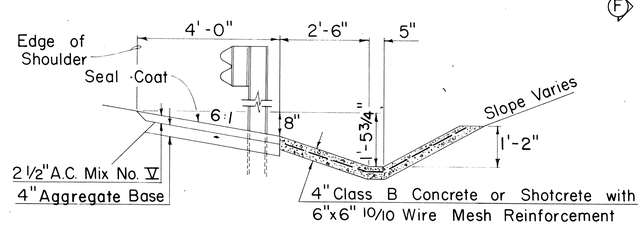

SECTION D-D

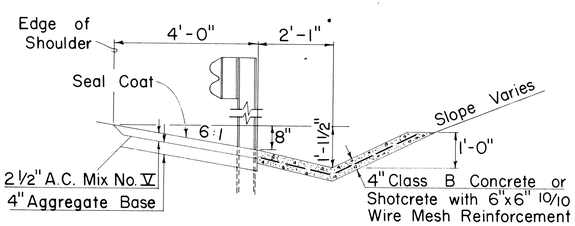

SECTION B-B

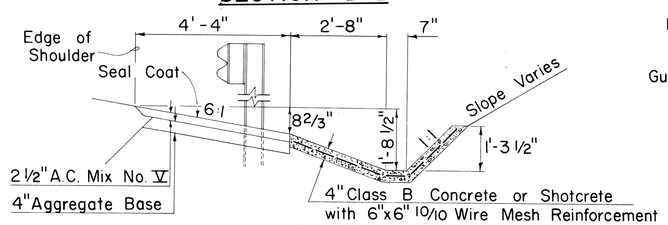

SECTION E-E

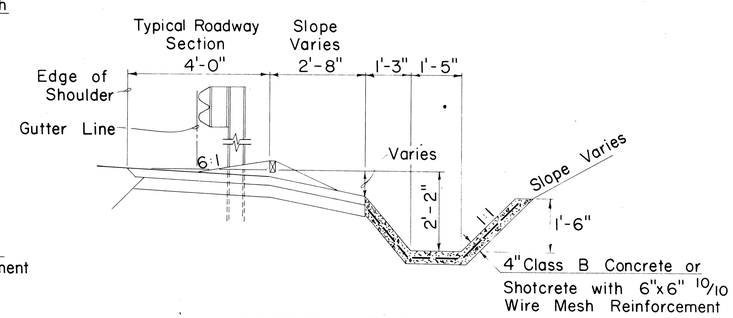

SECTION G-G

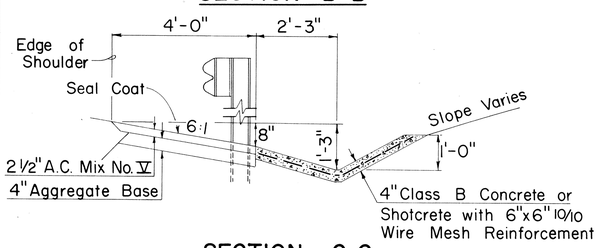

SECTION C-C

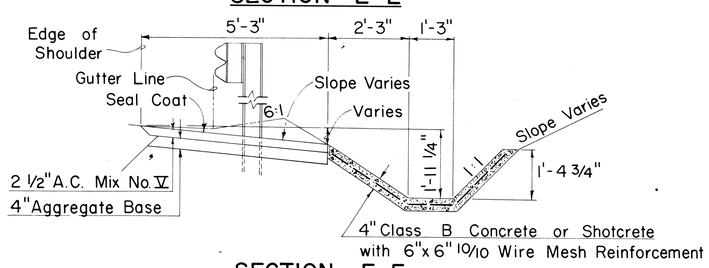

SECTION F-F

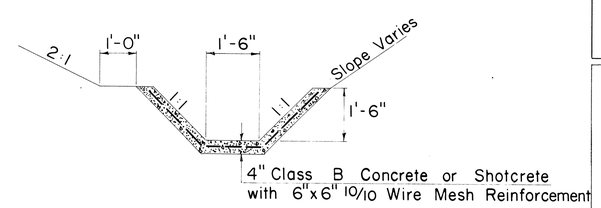

SECTION H-H

APPROVAL RECOMMENDED:

HYDRAULIC DESIGN ENGINEER — DATE 2-2-71

APPROVED:

ASSISTANT CHIEF, ENGINEERING — DATE 2-25-71

NO.	REVISION	APPROVED BY	DATE

STATE OF HAWAII
DEPARTMENT OF TRANSPORTATION
HIGHWAYS DIVISION

STANDARD DETAILS

CONCRETE SPILLWAY INLET

Scale: 1/2" = 1'-0" Date: January, 1971

SHEET No. 3 OF 6 SHEETS DH 20

ORIGINAL PLAN | SURVEY PLOTTED BY | DRAWN BY | TRACED BY | DESIGNED BY | QUANTITIES BY | CHECKED BY | DATE | NOTE BOOK No.

62 0 62

FED. ROAD DIST. NO.	STATE	FED. AID PROJ. NO.	FISCAL YEAR	SHEET NO.	TOTAL SHEETS
HAWAII	HAW.	I-HI-1(46)8	1973	32	104

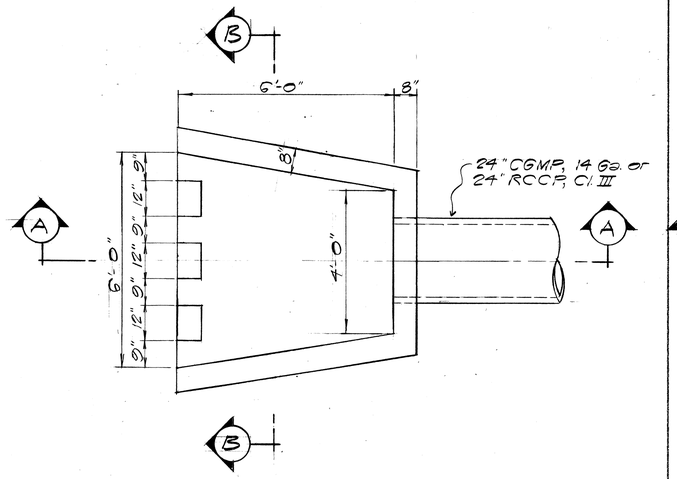

PLAN

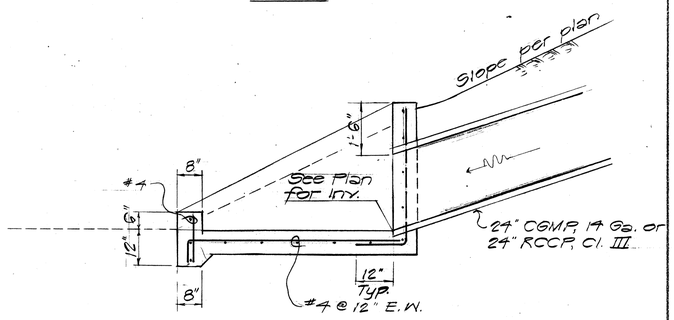

SECTION "A-A"

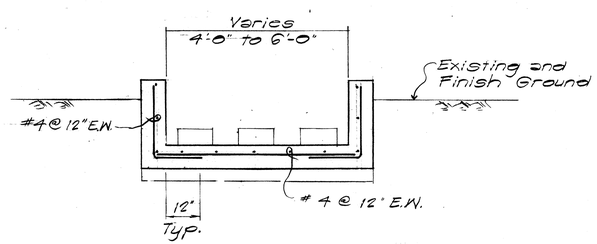

SECTION "B-B"

DETAILS ~ OUTLETS "C"

Scale: 1/2" = 1'-0"

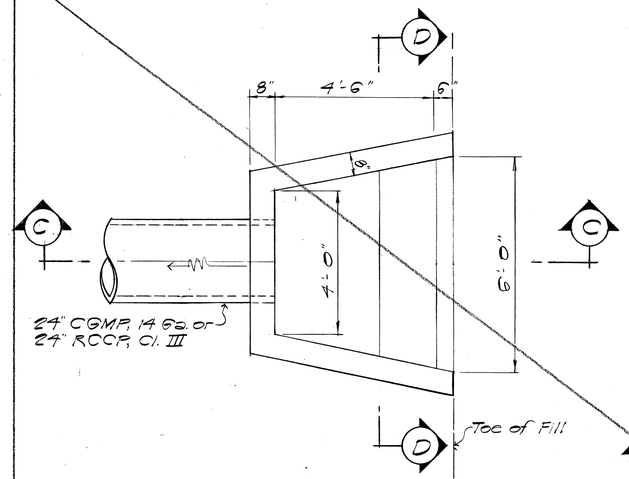

PLAN

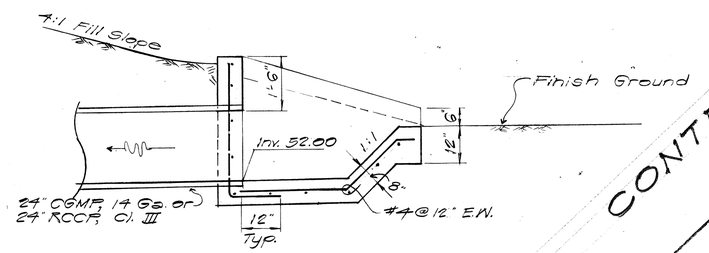

SECTION "C-C"

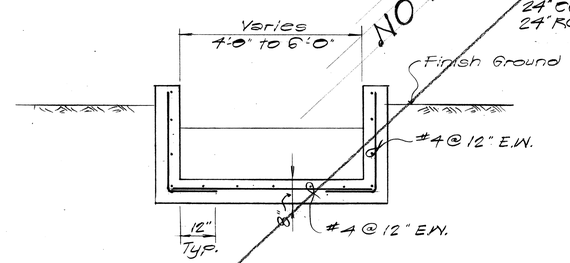

SECTION "D-D"

DETAILS ~ INLET "B"

Scale: 1/2" = 1'-0"

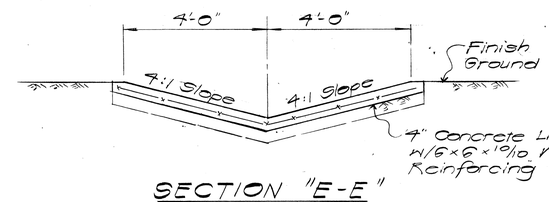

SECTION "E-E"

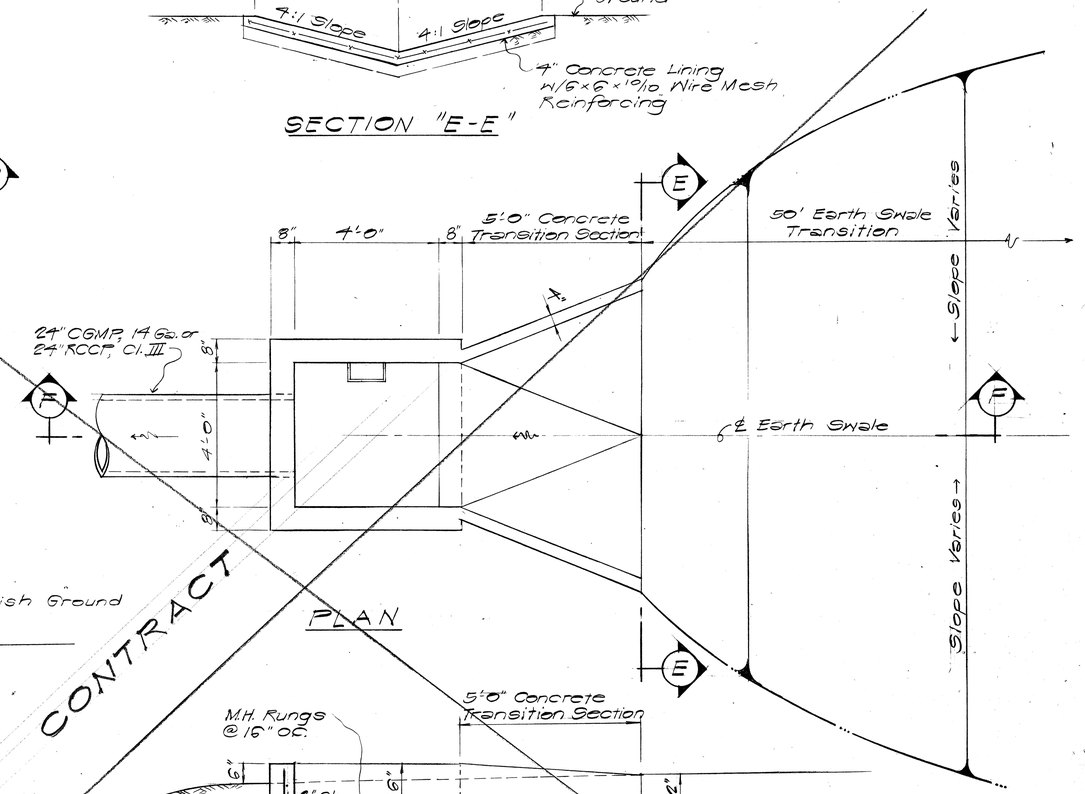

PLAN

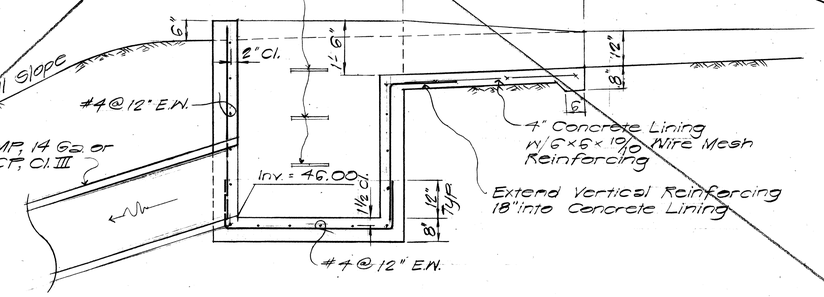

SECTION "F-F"

DETAILS ~ INLET # 19

Scale: 1/2" = 1'-0"

NOT IN CONTRACT

ORIGINAL PLAN	SURVEY PLOTTED BY	DATE
	DRAWN BY	
	TRACED BY	
NOTE BOOK	DESIGNED BY	
No.	QUANTITIES BY	
	CHECKED BY	

BEN TAGUCHI
REGISTERED PROFESSIONAL ENGINEER
No. 1030
HAWAII, U.S.A.

THIS WORK WAS PREPARED BY ME
OR UNDER MY SUPERVISION

STATE OF HAWAII
DEPARTMENT OF TRANSPORTATION
HIGHWAYS DIVISION

DRAINAGE DETAILS

INTERSTATE ROUTE H-1
WAIAWA INTERCHANGE
F.A.I. Proj. No. I - HI -1(46)·8
(PAVING OF H-2 CONNECTION)

Scale: As shown Date: April 1973

SHEET No. 4 OF 6 SHEETS

2033

FED. ROAD DIST. NO.	STATE	FED. AID PROJ. NO.	FISCAL YEAR	SHEET NO.	TOTAL SHEETS
HAWAII	HAW.	I-HI-1(46):8	1973	33	104

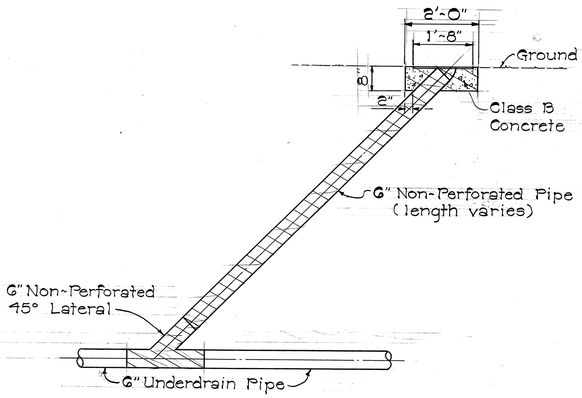

CLEANOUT AT INTERMEDIATE POINTS

NOTES:

1. Steel plate shall be thoroughly cleaned and painted with one coat of high grade asphaltum.
2. Hatched area denotes limit of payment for Cleanout.

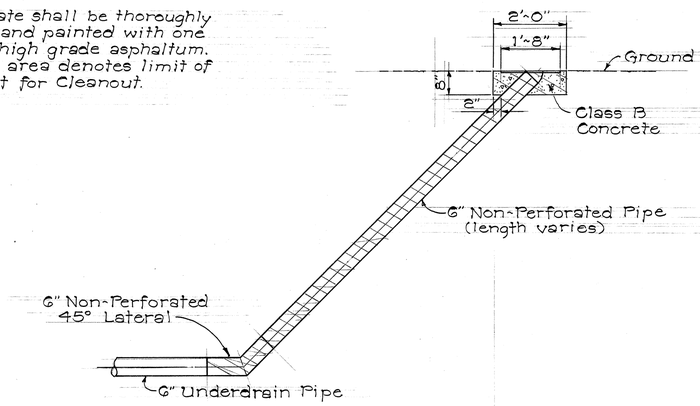

CLEANOUT AT END OF PIPE

ELEVATIONS

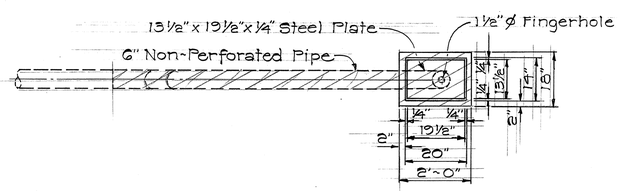

PLAN

DETAIL FOR CLEANOUT & CONCRETE BLOCKS FOR UNDERDRAINS

Scale: ½" = 1'-0"

CONSTRUCTION NOTES:

1. The State will furnish the total length of 6-inch (Perforated) Underdrain Pipe (270 l.f.) that is required to complete the work.
2. The Contractor shall haul the furnished Perforated Pipe (270 l.f.) from the State Project Field Office located in the Waiawa Interchange to the jobsite.
3. The Contract price paid under Item No. 605.0061, Installation of 6-inch Underdrain Pipe (furnished by the State), will be full compensation for the loading, hauling, unloading, cleaning, and installing of the State furnished 6-inch Perforated Asbestos Cement Pipe. Furthermore coupling fittings or bands and other appurtenances necessary for the installation of the 6-inch Perforated Asbestos Cement Pipe shall be considered incidental to Item No. 605.0061.
4. The Contractor shall install three (3) Cleanouts (End of Pipe Type Only) at the highest ends of the three locations of 6-inch Perforated Underdrains shown on Plan Sht. No. 11. The Engineer will approve the final locations of the Cleanouts.
5. Cleanouts shall be paid for under Item No. 605.200.
6. For additional requirements, the Contractor shall refer to Section 605 of the Special Provisions.

ESTIMATED QUANTITIES

Item No. 605.0061	Installation of 6-inch Underdrain Pipe (Furnished by the State)	270 L.F.
Item No. 206.02	Structure Excavation for Drainage System	31 C.Y.
Item No. 206.83	Filter Material for Underdrain	21 C.Y.
Item No. 605.200	Cleanout	3 Ea.

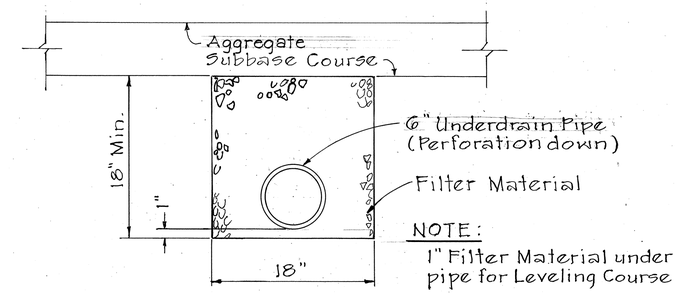

NOTE:
1" Filter Material under pipe for Leveling Course

TYPICAL UNDERDRAIN DETAIL

Scale: 1½" = 1'-0"

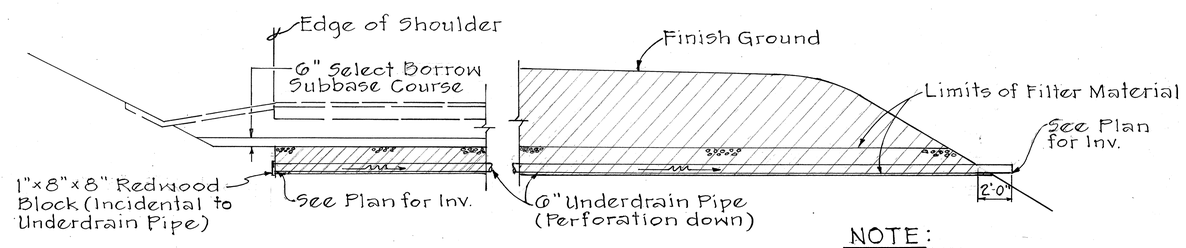

NOTE:
Hatched Areas denote limit of Structure Excavation Payline

TYPICAL UNDERDRAIN PROFILE

Scale: ¼" = 1'-0"

STATE OF HAWAII
DEPARTMENT OF TRANSPORTATION
HIGHWAYS DIVISION

DRAINAGE DETAILS

INTERSTATE ROUTE H-1
WAIAWA INTERCHANGE
F.A.I. PROJ. NO. I-H1-1(46):8
(PAVING OF H-2 CONNECTION)

Scale: As shown Date: April, 1973

SHEET No. 5 OF 6 SHEETS

2 0 4

ORIGINAL PLAN	SURVEY PLOTTED BY	DATE
	DRAWN BY	
	TRACED BY	
NOTE BOOK	DESIGNED BY	
	QUANTITIES BY	
No.	CHECKED BY	

K+E IMPERIAL™ LA 3207 TRACING CLOTH

FED. ROAD DIST. NO.	STATE	FED. AID PROJ. NO.	FISCAL YEAR	SHEET NO.	TOTAL SHEETS
HAWAII	HAW.	I-H1-1(46)8	1973	34	104

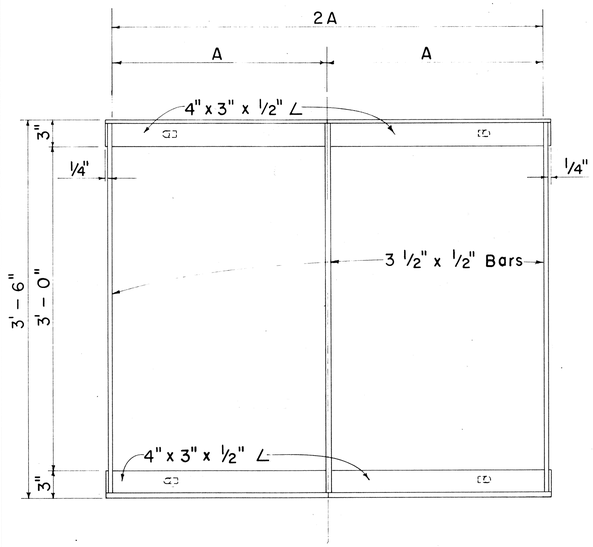

PLAN
Scale: 1 1/2" = 1'-0"

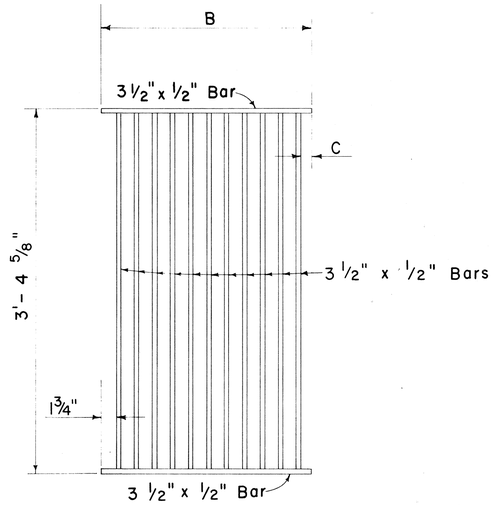

PLAN
Scale: 1 1/2" = 1'-0"

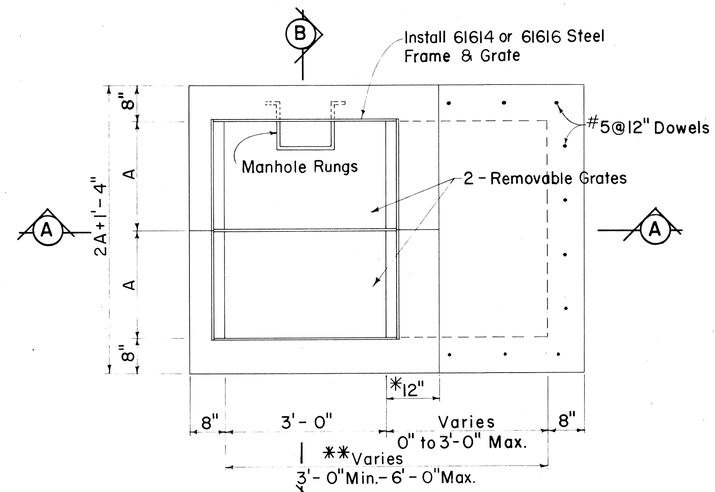

PLAN

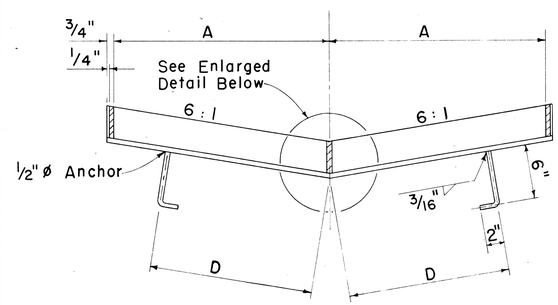

SECTION
Scale: 1 1/2" = 1'-0"

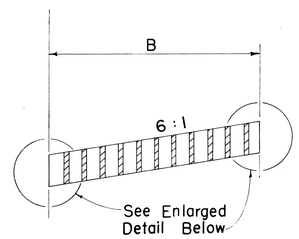

SECTION
Scale: 1 1/2" = 1'-0"

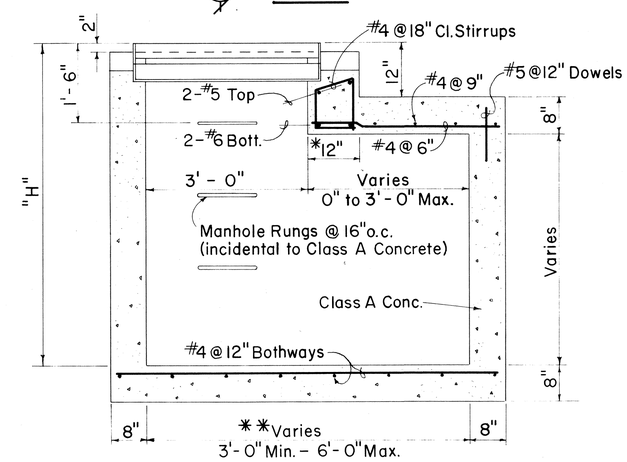

SECTION A - A

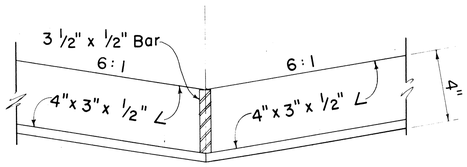

FRAME
Scale: 3" = 1'-0"

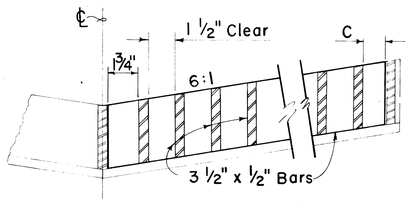

GRATE
Scale: 3" = 1'-0"

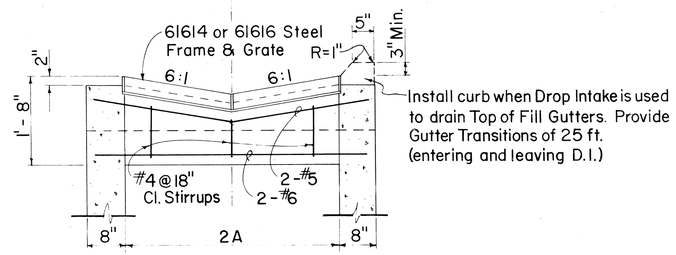

SECTION B - B

DETAILS OF TYPE 61614 OR 61616 STEEL FRAME AND GRATE

DETAILS OF 61614 OR 61616 DROP INTAKE

Scale: 3/4" = 1'-0"

*For Minimum size box of 3'-0", use 8" and eliminate reinforcing steel shown in the top portion.

**For Culverts larger than 30", the minimum dimension shall be D'.

GENERAL NOTES

1. Grates and Frames shall be hot dip galvanized after fabrication, see specifications.
2. All welds 3/8" unless otherwise noted.
3. Refer to "Spacing Table" for Types 61614 & 61616 Drop Intake and Frame & Grates dimensions.
4. The Frame & Grate materials shall conform to the specifications of ASTM Designation Structural Steel A283, Grade D and the Standard Specifications.
5. Culvert shall leave Drop Intake from any position and any direction indicated by plans or ordered by the Engineer. Culverts may both enter and leave Drop Intake so that Drop Intake will act as manhole.
6. Manhole Rungs (16" o.c.) are required when "H" is greater than 4 feet 6 inches. Only one rung (12 inches from the bottom) is required if "H" is 4 feet 6 inches or less. Manhole Rungs may be placed at any location as ordered by the Engineer.

SPACING TABLE

TYPE	NO. BARS	A	B	C	D
61614	11	2'-0"	1'-11 1/2"	1 1/4"	1'-6"
61616	17	3'-0"	2'-11 3/8"	1 1/8"	2'-0"

NO.	REVISION	APPROVED BY	DATE
1	Curb for Top of Fill Gutters	H.I.	65-11

APPROVAL RECOMMENDED:
Y. Takano — HYDRAULIC DESIGN ENGINEER — DATE 12-17-69

APPROVED:
Charles S. Sakai — ASSISTANT CHIEF, ENGINEERING — DATE 12-17-69

STATE OF HAWAII
DEPARTMENT OF TRANSPORTATION
HIGHWAYS DIVISION
STANDARD DETAILS
TYPE 61614 & 61616
GRATED DROP INTAKES

Scales: As Noted — Date: Feb. 1969

SHEET No. 6 OF 6 SHEETS — DH 8

ORIGINAL PLAN	SURVEY PLOTTED BY	DATE
	DRAWN BY	"
	TRACED BY	"
NOTE BOOK	DESIGNED BY	"
	QUANTITIES BY	"
No.	CHECKED BY	"