FED. ROAD DIST. NO.	STATE	FED. AID PROJ. NO.	FISCAL YEAR	SHEET NO.	TOTAL SHEETS
HAWAII	HAW.	FHI-1(22)10 FHI-1(27)10	1970	78A	97

DRAINAGE SUMMARY

STRUCTURES			PIPE CULVERTS		ESTIMATED QUANTITIES								REMARKS
			ITEM	NO.	206.01	503.101	503.201	602.101	603.2084	604.233	609.232		
NUMBER	TYPE	STATION	FROM	TO	Structure Excavation other than at Bridges	Class "A" Concrete other than in Bridge	Class "B" Concrete other than in Bridges	Reinforcing Steel other than in Bridges	24-Inch Corrugated Metal Pipe No. 12 gage	Type G1G12 Steel Frame & Grate	Type 7C Gutter		
			UNIT	USED	C.Y.	C.Y.	C.Y.	Lb.	L.F.	Ea.	L.F.		
	"G1G12" Intake W/Conc. Drop Box	10+20 (C)	10+20 (C)	10+20 (C)	27	3	3	27	26	1			
	"G1G12" Intake W/ Conc. Drop Box	82+75 Rt.	82+75 Rt.	82+75 Rt.	42	3	3	27	50	1			
	"G1G12" Intake W/ Conc. Drop Box	86+25 Rt.	86+25 Rt.	86+25 Rt.	29	3	3	27	28	1			
	"G1G12" Intake W/ Conc. Drop Box	89+25 Rt.	89+25 Rt.	89+25 Rt.	33	3	3	27	36	1			
	"G1G12" Intake W/ Conc. Drop Box	105+00 Rt.	105+00 Rt.	105+00 Rt.	58	3	3	27	78	1			
	"G1G12" Intake W/ Conc. Drop Box	105+75 Lt.	105+75 Lt.	105+75 Lt.	51	3	3	27	65	1			
	"G1G12" Intake W/ Conc. Drop Box	107+75 Rt.	107+75 Rt.	107+75 Rt.	47	3	3	27	59	1			
	"G1G12" Intake W/ Conc. Drop Box	108+25 Lt.	108+25 Lt	108+25 Lt.	33	3	3	27	35	1			
	"G1G12" Intake W/ Conc. Drop Box	110+65 Lt.	110+65 Lt.	110+65 Lt.	47	3	3	27	58	1			
	"G1G12" Intake W/ Conc. Drop Box	110+65 Rt.	110+65 Rt.	110+65 Rt.	51	3	3	27	65	1			
	"G1G12" Intake W/ Conc. Drop Box	146+25 Rt.	146+25 Rt.	146+25 Rt.	60	3	3	27	95	1			
	"G1G12" Intake W/ Conc. Drop Box	147+50 Rt.	147+50 Rt.	147+50 Rt.	60	3	3	27	95	1			
	"G1G12" Intake W/ Conc. Drop Box	147+75 Lt.	147+75 Lt.	147+75 Lt.	43	3	3	27	52	1			
	"G1G12" Intake W/ Conc. Drop Box	149+25 Lt.	149+25 Lt.	149+25 Lt.	43	3	3	27	53	1			
	"G1G12" Intake W/ Conc. Drop Box	149+25 Rt.	149+25 Rt.	149+25 Rt.	27	3	3	27	26	1			
	"G1G12" Intake W/ Conc. Drop Box	163+50 Rt.			12	3		27		1			
	"G1G12" Intake W/ Conc. Drop Box	165+00 Rt.	165+00 Rt.	165+00 Rt.	73	3	3	27	103	1			
	"G1G12" Intake W/ Conc. Drop Box	166+80 Rt.	166+80 Rt.	166+80 Rt.	79	3	3	27	113	1			
	Gutter Transition	78+00 Rt.									100		
	Gutter Transition	101+65 Rt.									50		
	Gutter Transition	102+88 Lt.									40		
	Gutter Transition	144+70 Rt.									50		
	Gutter Transition	145+45 Lt.									50		
	Gutter Transition	162+00 Rt.									50		

ORIGINAL PLAN	
	SURVEY PLOTTED BY
	TOPOGRAPHY BY
	TRACED BY
NOTE BOOK	DESIGNED BY
	QUANTITIES BY
No.	CHECKED BY

DATE

SHEET No. 1 OF 17 SHEETS

78A

FED. ROAD DIST. NO.	STATE	FED. AID PROJ. NO.	FISCAL YEAR	SHEET NO.	TOTAL SHEETS
HAWAII	HAW.	HI-1(60)(71)X	1970	79	87

DRAINAGE SUMMARY

STRUCTURES			PIPE CULVERTS		ESTIMATED QUANTITIES																														REMARKS
			ITEM	NO.	G09.231	G09.232																													
NUMBER	TYPE	STATION	FROM	TO	Type 7B Gutter	Type 7C Gutter																													
			UNIT	USED	L.F.	L.F.																													
	Gutter Transition	1G3+00 Lt.				50																													
	Gutter Transition	1G9+30 Rt.				50																													
	Gutter Transition	1G9+50 Lt.				22																													
	Gutter	3+51.87(A) %Rt. to 13+14.20 (A) %Rt.			962																														
	Gutter	0+21(B) %Rt. to 3+33(B) %Rt.			312																														
	Gutter	6+54(E) %Lt. to 4+55(H) %Lt.				1225																													
	Gutter	4+35(C) %Lt. to 5+70(G) %Lt.			1235																														
	Gutter	3+72(E) %Lt. to 6+54(E) %Lt.			282																														
	Gutter	1+01.10(F) %Rt. to 8+64(F) %Rt.			763																														
	Gutter	40+35(M-R) %Lt. to 41+48(M-R) %Lt.			113																														
	Gutter	42+18(M-R) %Lt. to 43+68(M-R) %Lt.			150																														
	Gutter	46+84(M-R) %Rt. to 49+61(M-R) %Rt.			277																														
	Gutter	16+65(A) %Rt. to 17+45(A) %Rt.			80																														
	Gutter	90+75(H-1) %Lt. to 102+88(H-1) %Lt.				1213																													
	Gutter	124+00(H-1) %Lt. to 145+45(H-1) %Lt.				2145																													
	Gutter	145+75(H-1) %Lt. to 163+00(H-1) %Lt.				1325																													
	Gutter	160+50(H-1) %Lt. to 170+34(H-1) %Lt.				984																													
	Gutter	77+50(H-1) %Rt. to 81+75(H-1) %Rt.			425																														
	Gutter	90+25(H-1) %Rt. to 101+65(H-1) %Rt.				1140																													

ORIGINAL PLAN	SURVEY PLOTTED BY	DATE
	DRAWN BY	" " "
	TRACED BY	" " "
NOTE BOOK	DESIGNED BY	
	QUANTITIES BY	
No.	CHECKED BY	

SHEET No. 2 OF 17 SHEETS

79

FED. ROAD DIST. NO.	STATE	FED. AID PROJ. NO.	FISCAL YEAR	SHEET NO.	TOTAL SHEETS
HAWAII	HAW.	F-HI-1(66)10 F-HI-1(67)10	1970	80	97

DRAINAGE SUMMARY

STRUCTURES			PIPE CULVERTS		ESTIMATED QUANTITIES																					REMARKS
			ITEM	NO.	206.01		503.101	503.201		508.01	602.101	603.00.10	603.205	603.2642	603.3064	603.7220	603.7240	604.011	604.201	604.233	604.234	612.01	609.231	609.232		
NUMBER	TYPE	STATION	FROM	TO	Structure Excavation other than at Bridges		Class "A" Concrete other than in Bridges	Class "B" Concrete other than in Bridges		Cement Rubble Masonry	Reinforcing Steel other than in Bridges	Base Course Material for Culverts	18" Corrugated Metal Slotted Drain Pipe No. 16 gage	76 inch x 44 inch Corrugated Metal Pipe Arch, No. 12 gage	102 inch Structural Plate Pipe, No. 10 gage	24 inch Corrugated Metal Pipe No. 12 gage or 24" Class III R.C. Pipe A.C.P.	24 inch Corrugated Metal Pipe No. 10 gage or 24" Class III R.C. Pipe A.C.P.	Brick Well for Type "E" or "D" Storm Drain Manholes	Type "A" Cast Iron Frame & Cover	Type 6/6/2 Steel Frame & Grate	Type 6/6/3 Steel Frame & Grate	Grouted Rubble Paving	Type 7/3 Gutter	Type 7C Gutter		
			UNIT	USED	C.Y.		C.Y.	C.Y.		C.Y.	Lb.	C.Y.	L.F.	L.F.	L.F.	L.F.	L.F.	L.F.	Ea.	Ea.	Ea.	C.Y.	L.F.	L.F.		
	Gutter	124+00 (H-1) % Rt. to 144+70 (H-1) % Rt.																						2070		
	Gutter	140+75 (H-1) % Rt. to 162+00 (H-1) % Rt.																						1315		
	Gutter	160+30 (H-1) % Rt. to 172+32 (H-1) % Rt.																						302		
	Gutter Connection	82+75 % Rt. to 81+75 % Rt.																						100		
	Gutter Connection	80+25 % Rt. to 90+25 % Rt.																						100		
	Gutter Connection	140+25 % Rt. to 140+75 % Rt.																						50		
	Gutter Connection	140+25 % Lt. to 140+75 % Lt.																						50		
	Gutter Connection	172+32 % Rt. to 172+92 % Rt.																						60		
	Type "G" 12" Drop Intake	62+35 (H-1)	62+35 (H-1)	14+70 Channel Sta.	50		3				27						78			1						
	Type "G" 12" Drop Intake	2+60 (C)			9		3				27									1						
	Type "G" 12" Drop Intake	4+85 (C)	4+85 (C)	4+75 (C)	33		3				27						37			1						
	Type "G" 13" Drop Intake	4+75 (C)			12		4				38										1					
	Type "G" 12" Drop Intake	65+20 (H-1)	65+20 (H-1)	11+85 Channel Sta.	55		3				27						71			1						
	Channel #1	10+50	10+50	15+55.71	1000		238				18,432															
	Sect. Plate Pipe Culvert	15+55.71 (Pipe Sta.)	15+55.71 (Pipe Sta.)	18+15.94 (Pipe Sta.)	1565		6				550	153			262											
	Pipe Arch & 24" ϕ Pipe	308+55 (Kam. Hwy.)			1374		22	2		90	2000			332		125		4	1							
	Median Drain Inlet (By Others)	75+25 (H-1)	75+25 (H-1)	79+50 (H-1)									425													
	Median Drain Inlet (By Others)	99+00 (H-1)	99+00 (H-1)	97+50 (H-1)									150													
	Median Drain Inlet (By Others)	97+50 (H-1)	97+50 (H-1)	96+00 (H-1)									150													
	Gutter	14+43 (C) % Lt. to 19+05 (C) % Lt.																					462			
	Gutter	5+75 (E) % Rt. to 10+75 (E) % Rt.																						1400		
	Channel #2	18+15.94	18+15.94	23+45.00	1670		186				13,625											7				

ORIGINAL PLAN	
SURVEY PLOTTED BY	
DRAWN BY	
TRACED BY	
DESIGNED BY	
QUANTITIES BY	
CHECKED BY	
DATE	
NOTE BOOK	
No.	

FED. ROAD DIST. NO.	STATE	FED. AID PROJ. NO.	FISCAL YEAR	SHEET NO.	TOTAL SHEETS
HAWAII	HAW.	I-H1-1(64)0 I-H1-1(67)10	1970	81	97

DRAINAGE SUMMARY

STRUCTURES			PIPE CULVERTS		ESTIMATED QUANTITIES	REMARKS
			ITEM	NO.	609.230	
NUMBER	TYPE	STATION	FROM	TO	Type 7A Gutter	
			UNIT	USED	L.F.	
	Gutter	2+60(C) % Rt. to 10+20(C) % Rt.			760	
	Gutter	62+35(H-1) % Lt. to 71+75(F) % Rt.			927	
	Gutter	103+25(H-1) % Lt. to 110+65(H-1) % Lt.			740	
	Gutter	146+00(H-1) % Lt. to 149+25(H-1) % Lt.			325	
	Gutter	82+75(H-1) % Rt. to 89+25(H-1) % Rt.			650	
	Gutter	102+15(H-1) % Rt. to 110+65(H-1) % Rt.			850	
	Gutter	145+25(H-1) % Rt. to 149+25(H-1) % Rt.			400	
	Gutter	163+25(H-1) % Rt. to 168+75(H-1) % Rt.			550	
	Gutter	172+92(H-1) % Rt. to 188+50(H-1) % Rt.			1558	
	Gutter	179+36(H-1) % Lt. to 187+00(H-1) % Lt.			764	

ORIGINAL PLAN		DATE
	SURVEY PLOTTED BY	
	DRAWN BY	"
	TRACED BY	"
NOTE BOOK	DESIGNED BY	"
	QUANTITIES BY	"
No.	CHECKED BY	"

SHEET No. 4 OF 17 SHEETS

S 1

FED. AID PROJ. NO.					
HAWAII		I-H1-1(GG):10 I-H1-1(GT):10	1070	22	87

NOTES:

1. All pipes designated by ϕ shall be 10 gage C.M.P. or Class III R.C.P. or A.C.P.
2. For Profiles & Details of 102"ϕ Pipe @ Kam. Hwy. & Channel 1 & 1a, see Shts. 83, 84, 84A & 85.
3. For Details of Type "G1G12" & "G1G13" Drop Intake, see Sht. 86.
4. For Details of discharge facilities downstream of Type "G1G12" Drop Intakes see Sht. 87.

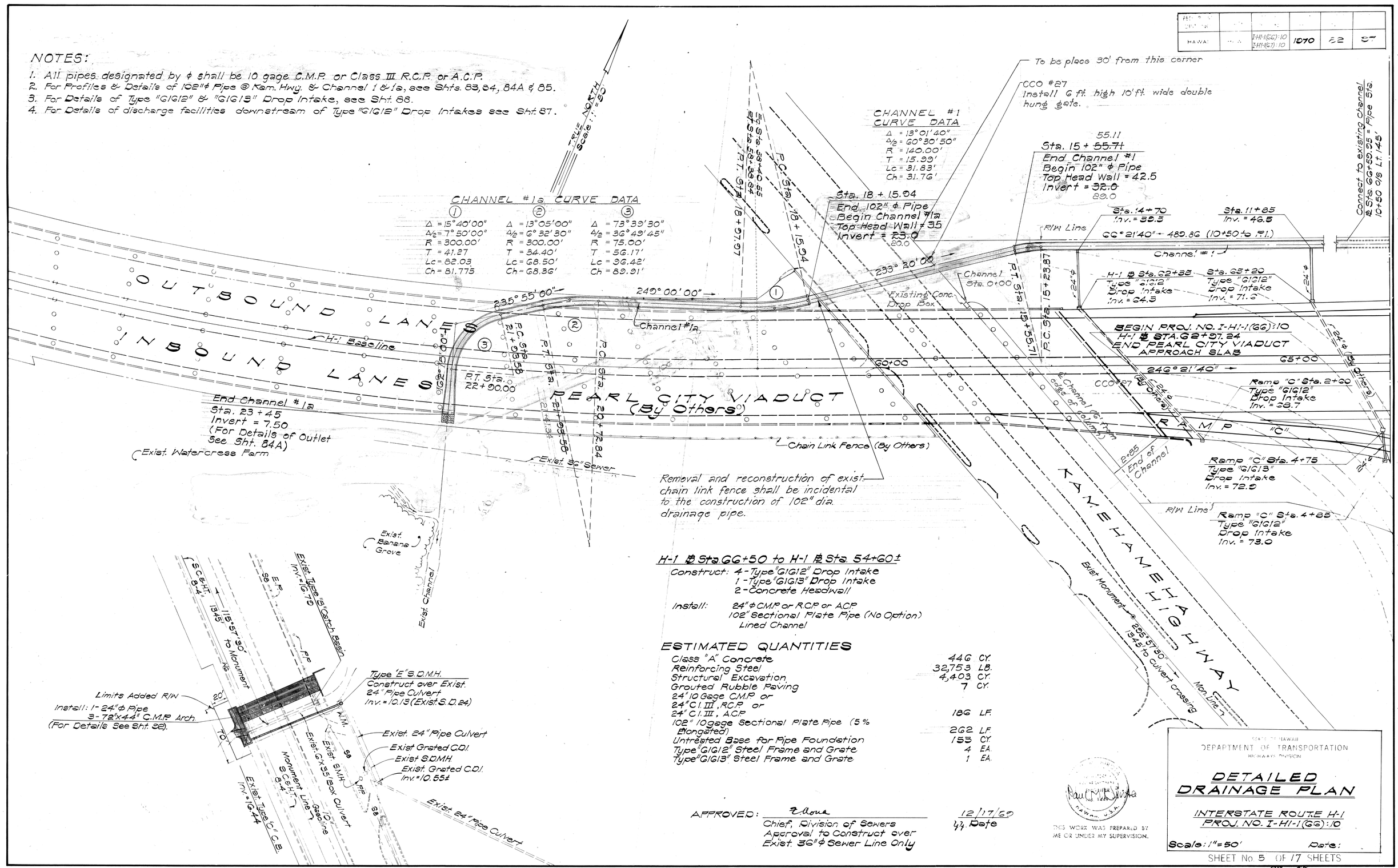

H-1 ℄ Sta. 66+50 to H-1 ℄ Sta. 54+60±

Construct: 4-Type "G1G12" Drop Intake
1-Type "G1G13" Drop Intake
2-Concrete Headwall

Install: 24" ϕ CMP or RCP or ACP
102" Sectional Plate Pipe (No Option)
Lined Channel

ESTIMATED QUANTITIES

Class "A" Concrete	446	CY.
Reinforcing Steel	32,753	LB.
Structural Excavation	4,403	CY.
Grouted Rubble Paving	7	CY.
24" 10 Gage C.M.P. or 24" C.I. III, R.C.P. or 24" C.I. III, A.C.P.	186	LF.
102" 10 gage Sectional Plate Pipe (5% Elongated)	262	LF.
Untreated Base for Pipe Foundation	155	CY.
Type "G1G12" Steel Frame and Grate	4	EA.
Type "G1G13" Steel Frame and Grate	1	EA.

APPROVED: [signature] 12/17/69
Chief, Division of Sewers — Date
Approval to Construct over Exist. 36" ϕ Sewer Line Only

THIS WORK WAS PREPARED BY ME OR UNDER MY SUPERVISION.

STATE OF HAWAII
DEPARTMENT OF TRANSPORTATION
HIGHWAYS DIVISION

DETAILED DRAINAGE PLAN

INTERSTATE ROUTE H-1
PROJ. NO. I-H1-1(GG):10

Scale: 1" = 50' Date:

SHEET No. 5 OF 17 SHEETS

FED. ROAD DIST. NO.	STATE	FED. AID PROJ. NO.	FISCAL YEAR	SHEET NO.	TOTAL SHEETS
HAWAII	HAW.	I-HI-1(GQ):10 I-HI-1(GT):10	1970	83	97

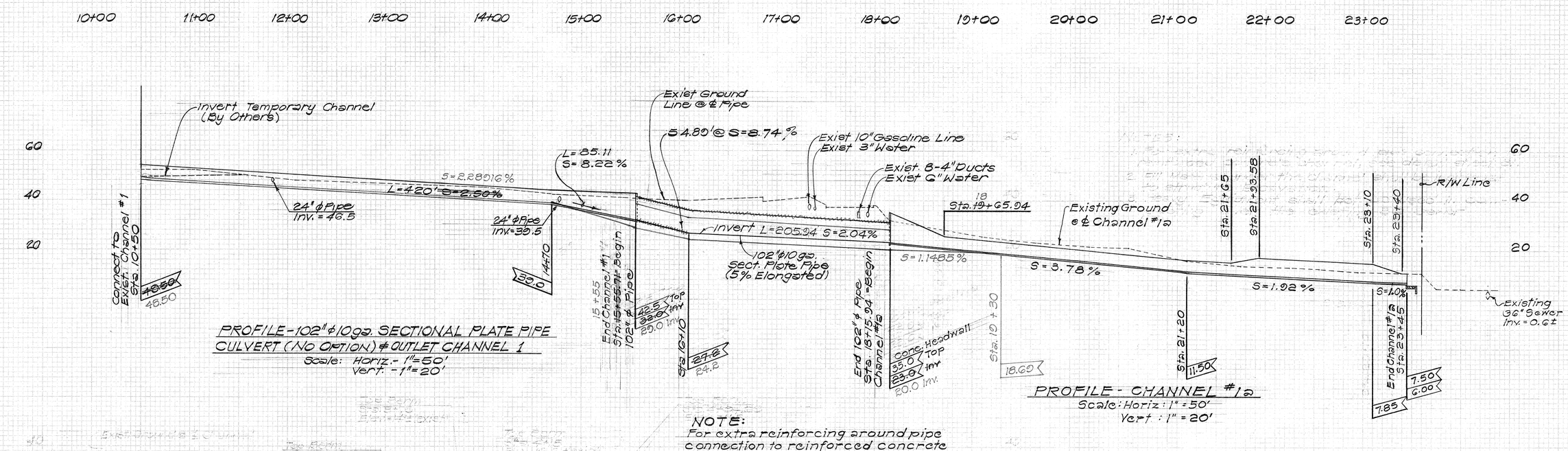

NOTE:
For extra reinforcing around pipe connection to reinforced concrete channel, see detail sheet 93

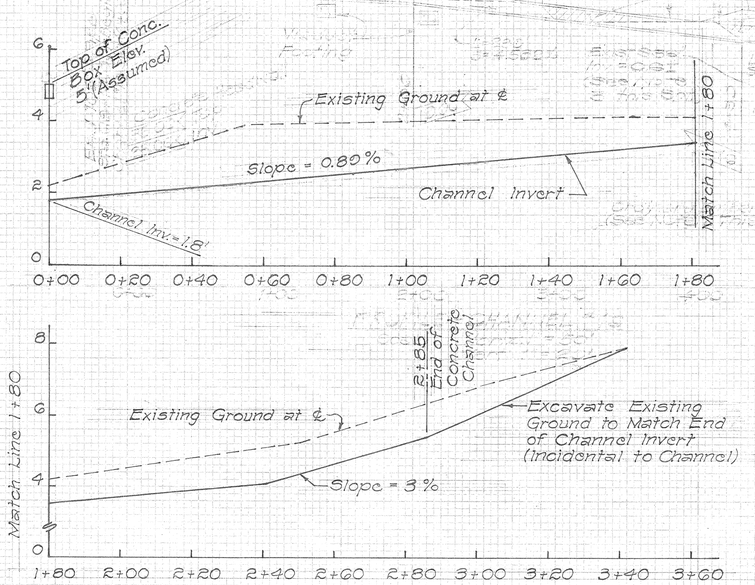

CHANNEL DITCH - ELEVATION

C.C.O. #27

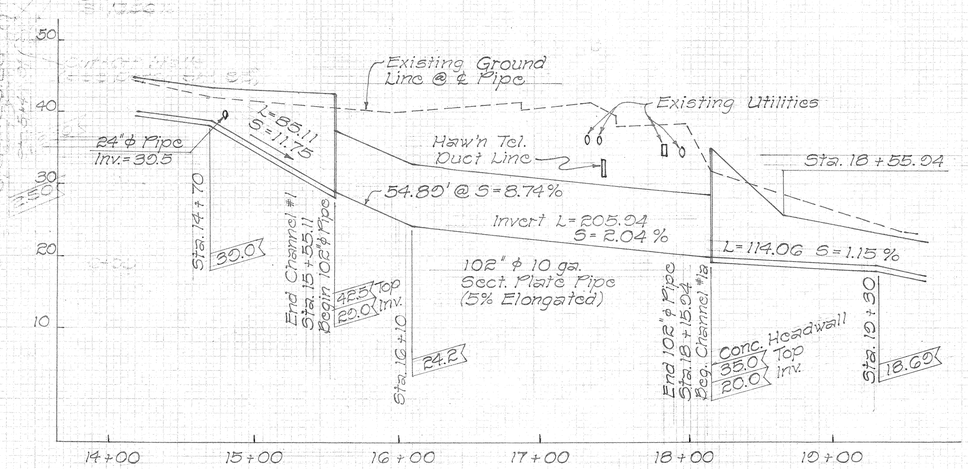

C.C.O. #5

APPROVED: R. Morse
Chief, Division of Sewers
Approval to Construct over Exist. 36" ϕ Sewer Line Only
12/17/69
Date

PAUL M. HIROTA
REGISTERED PROFESSIONAL ENGINEER
No. 2221
HAWAII, U.S.A.

THIS WORK WAS PREPARED BY ME OR UNDER MY SUPERVISION.

STATE OF HAWAII
DEPARTMENT OF TRANSPORTATION
HIGHWAYS DIVISION

102" SECTIONAL PLATE PIPE CULVERT & OUTLET CHANNELS #1 & 1a

INTERSTATE ROUTE H-1
PROJECT NO. I-HI-1(GQ):10

SCALE: As Shown DATE:

SHEET No. 6 OF 17 SHEETS

83

FED. ROAD DIST. NO.	STATE	FED. AID PROJ. NO.	FISCAL YEAR	SHEET NO.	TOTAL SHEETS
HAWAII	HAW.	I-HI-1(66)10 I-HI-1(67)10	1970	84	97

CHANNEL #1a CURVE DATA

①		②		③	
Δ	= 15°40'00"	Δ	= 13°05'00"	Δ	= 73°39'30"
Δ/2	= 7°50'00"	Δ/2	= 6°32'30"	Δ/2	= 36°49'45"
R	= 300.00'	R	= 300.00'	R	= 75.00'
T	= 41.27	T	= 34.40	T	= 56.17'
Lc	= 82.03	Lc	= 68.50	Lc	= 96.42'
Ch	= 81.775	Ch	= 68.36	Ch	= 89.91'

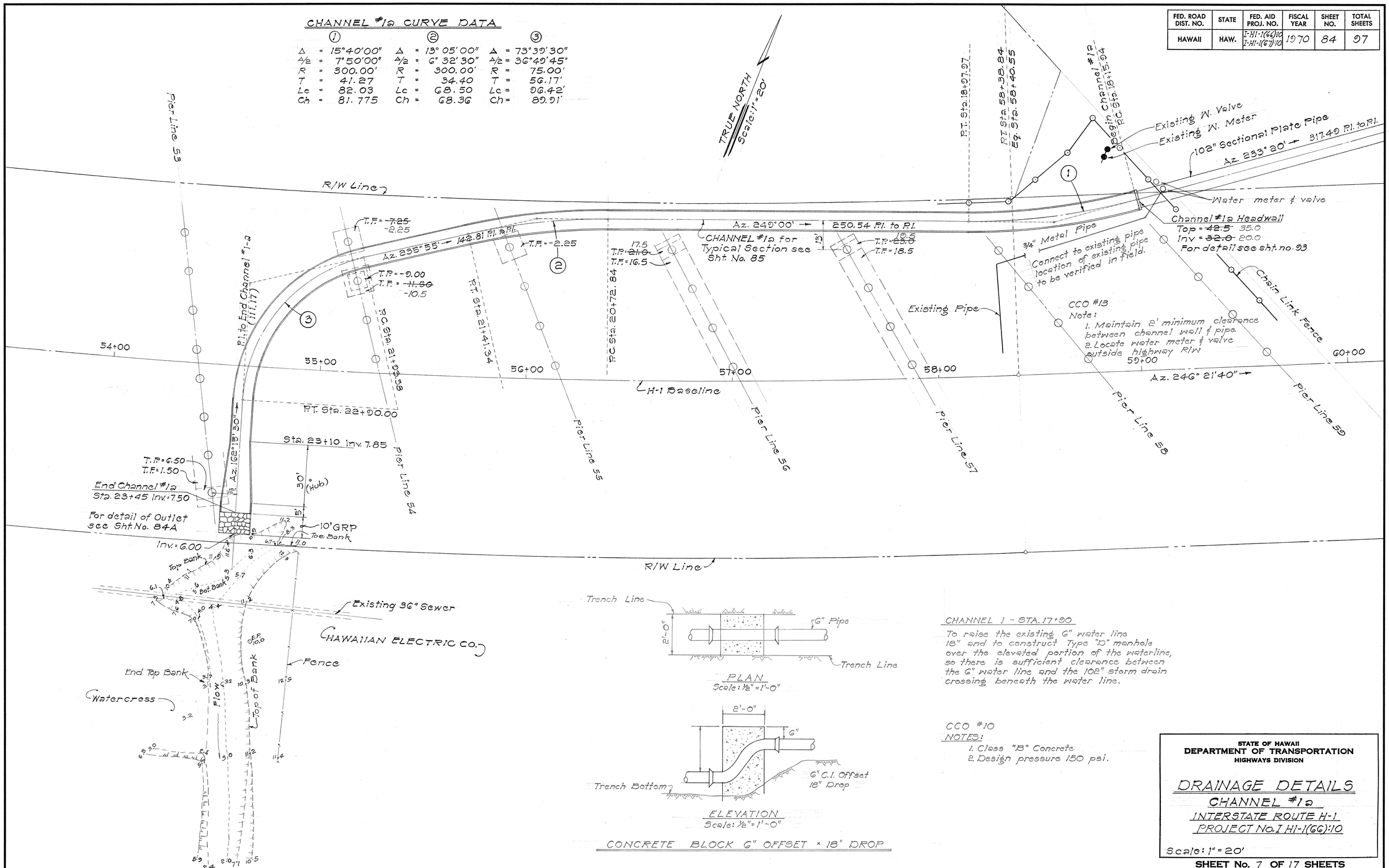

CHANNEL 1 ~ STA. 17+90

To raise the existing 6" water line 18" and to construct Type "D" manhole over the elevated portion of the waterline, so there is sufficient clearance between the 6" water line and the 102" storm drain crossing beneath the water line.

CCO #10

NOTES:

1. Class "B" Concrete
2. Design pressure 150 psi.

ORIGINAL PLAN		DATE
	SURVEY PLOTTED BY	
	DRAWN BY	
	TRACED BY	
	DESIGNED BY	
NOTE BOOK	QUANTITIES BY	
No.	CHECKED BY	

STATE OF HAWAII
DEPARTMENT OF TRANSPORTATION
HIGHWAYS DIVISION

DRAINAGE DETAILS
CHANNEL #1a
INTERSTATE ROUTE H-1
PROJECT No. I HI-1(66):10

Scale: 1" = 20'

SHEET No. 7 OF 17 SHEETS

FED. ROAD DIST. NO.	STATE	FED. AID PROJ. NO.	FISCAL YEAR	SHEET NO.	TOTAL SHEETS
HAWAII	HAW.	I-HI-1(GG):10 I-HI-1(GT):10	1970	84A	97

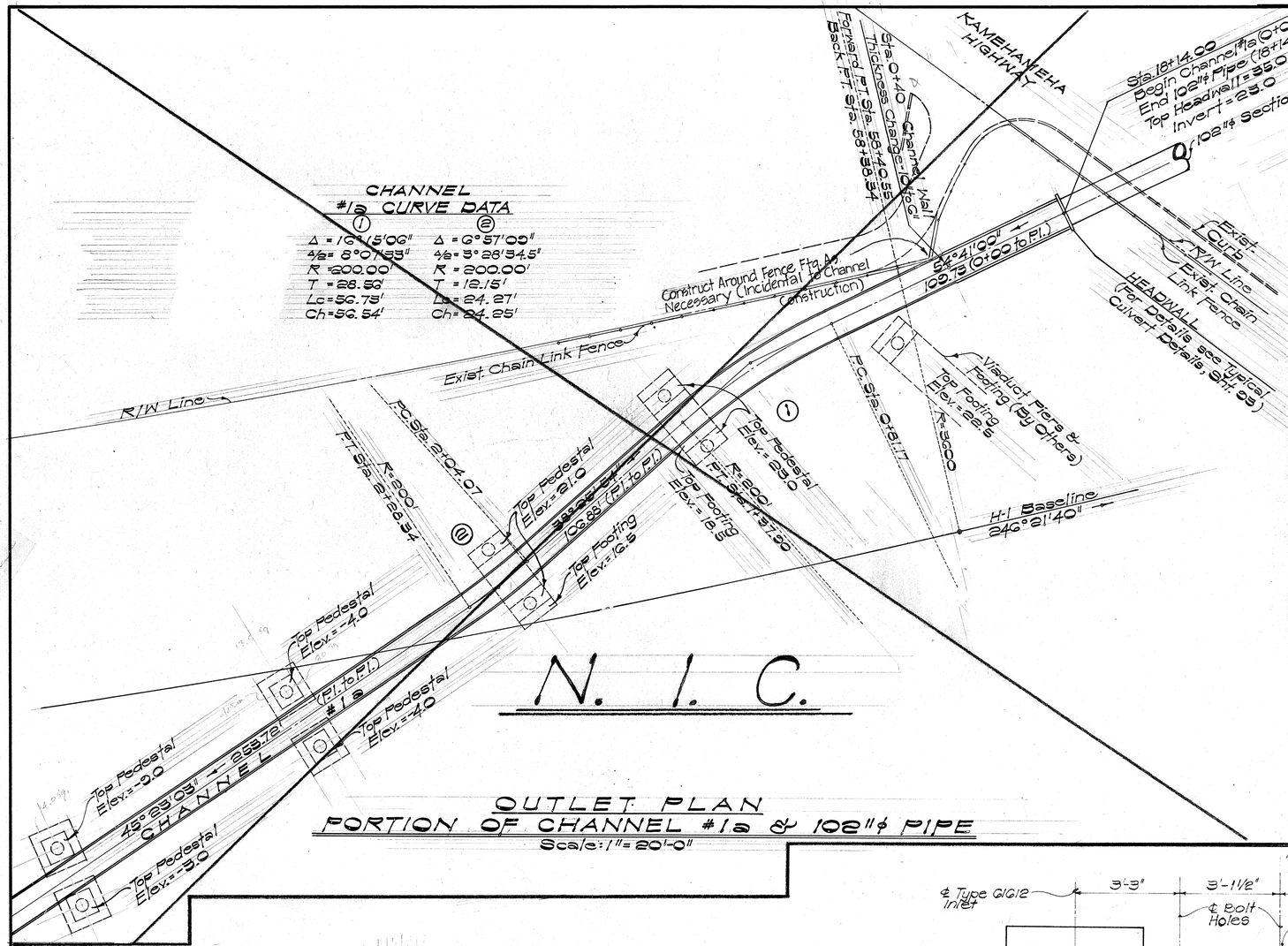

OUTLET PLAN
PORTION OF CHANNEL #1a & 102"ϕ PIPE
Scale: 1" = 20'-0"

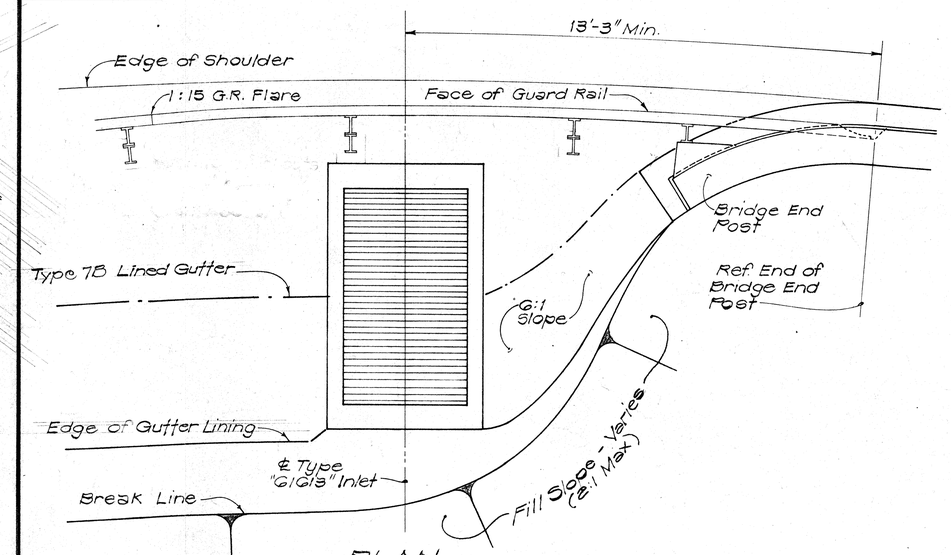

PLAN
"GIG13" INLET @ BRIDGE END POSTS
Scale: 1/2" = 1'-0"

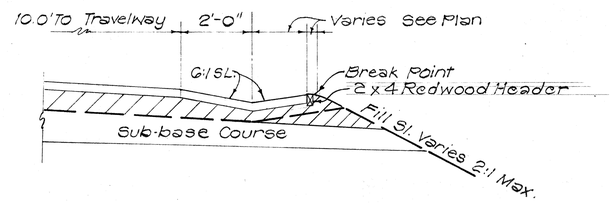

TYPICAL SECTION - BETWEEN INLET & WING WALL
Scale: 1/2" = 1'-0"

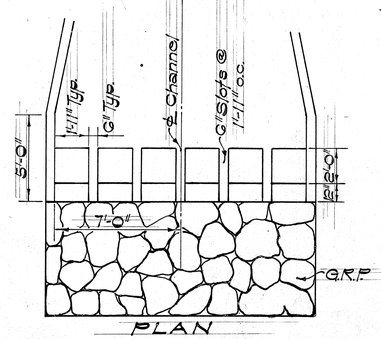

PLAN

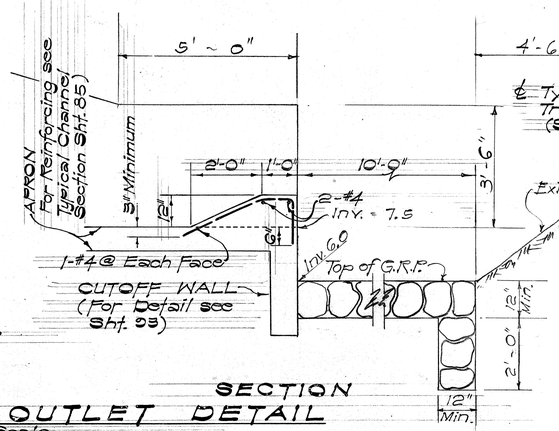

SECTION

CHANNEL #1a OUTLET DETAIL
Not To Scale

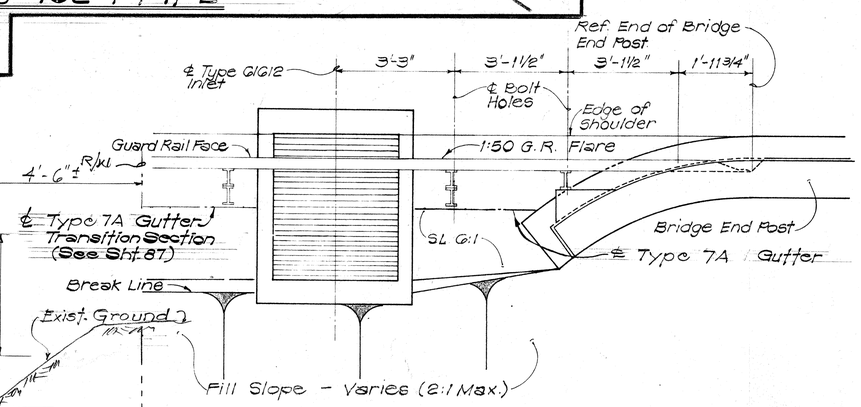

PLAN
"GIG12" INLET @ BRIDGE END POSTS
Scale: 1/2" = 1'-0"

PAUL M. HIROTA REGISTERED PROFESSIONAL ENGINEER No. 7246 HAWAII, U.S.A.

THIS WORK WAS PREPARED BY ME OR UNDER MY SUPERVISION.

STATE OF HAWAII
DEPARTMENT OF TRANSPORTATION
HIGHWAYS DIVISION

DRAINAGE DETAILS

INTERSTATE ROUTE H-1
PROJECT No. I H1-1(GG):10

Scale: As Shown Date:

SHEET No. 8 OF 17 SHEETS

84A

FED. ROAD DIST. NO.	STATE	FED. AID PROJ. NO.	FISCAL YEAR	SHEET NO.	TOTAL SHEETS
HAWAII	HAW.	I-HI-1(66):10 I-HI-1(67):10	1970	85	97

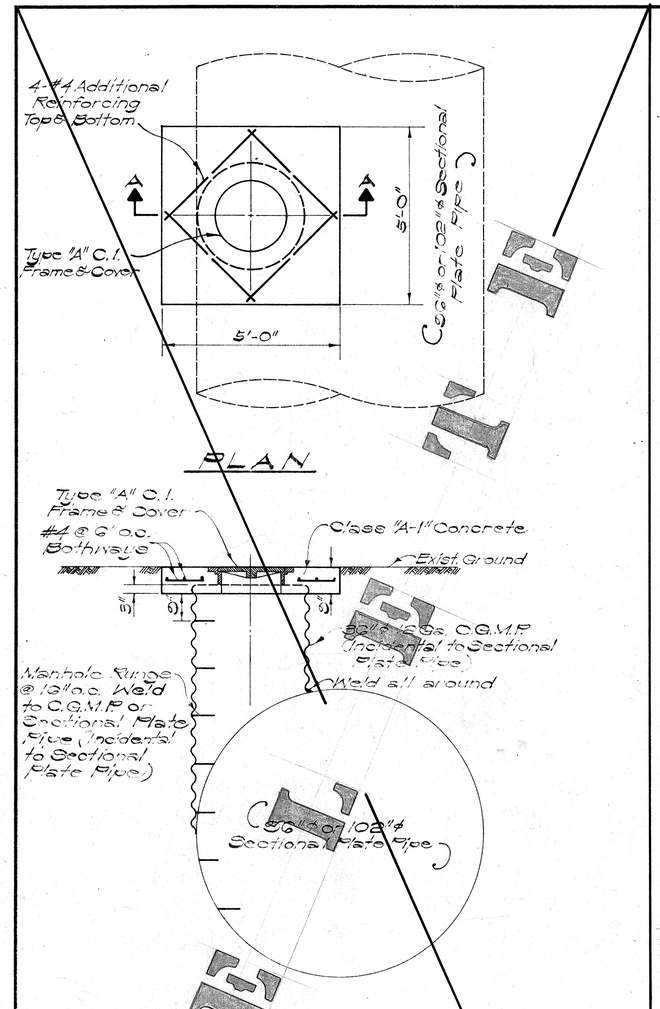

MANHOLE FOR 96"ϕ & 102"ϕ SECTIONAL PLATE PIPE

Scale: 1/2" = 1'-0"

NOTE:
1. Manhole rungs shall be cut off at the wall line before (See Standard Manhole Rung Detail Sht. 97).

ORIGINAL PLAN		DATE
	SURVEY PLOTTED BY	
	DRAWN BY	
	TRACED BY	
NOTE BOOK	DESIGNED BY	
	QUANTITIES BY	
No.	CHECKED BY	

NOTE:
The Drain & Filter Material shall be incidental to the channel.

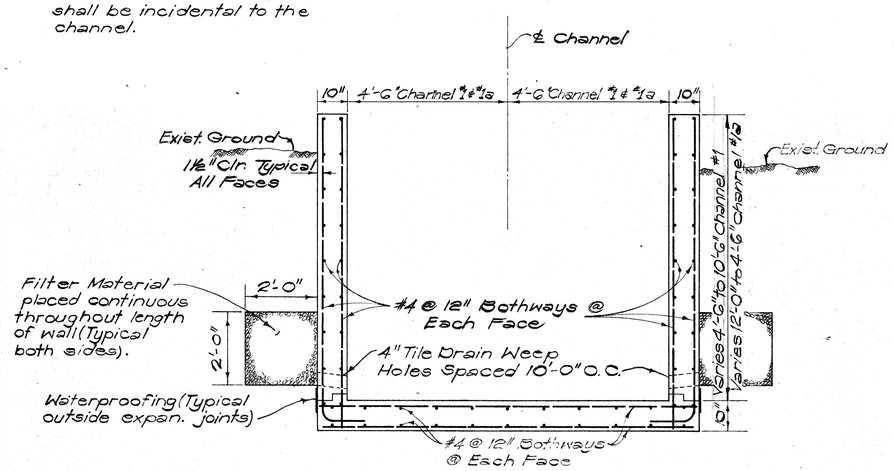

TYPICAL SECTION

CHANNEL #1 STA. 14+70 TO 15+55.11 18+65.94
OUTLET CHANNEL #1a STA. 18+15.94 TO ~~19+65.94~~

Scale: 1/2" = 1'-0"

* 4'-6" Sta. 18+15.94 to Sta. 23+10.00
* 4'-6" to 7'-0" Sta. 23+10 to 23+40
* 7'-0" Sta. 23+40 to Sta. 23+45

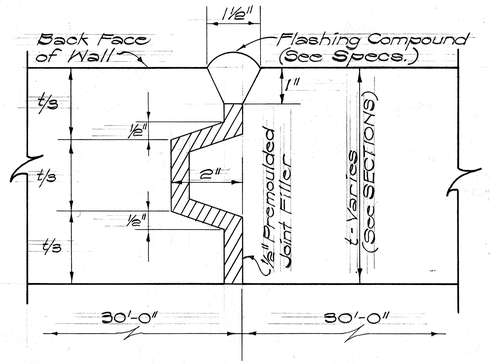

TYPICAL DETAIL
CHANNEL EXPANSION JOINT

Not to Scale

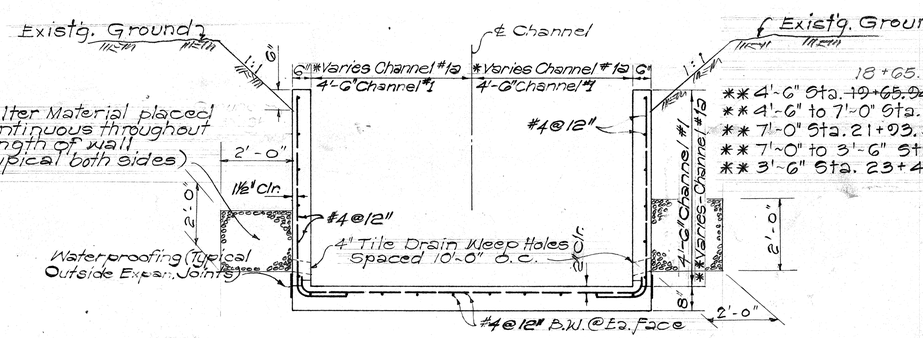

18+65.94

** 4'-6" Sta. ~~19+65.94~~ to 21+65.00
** 4'-6" to 7'-0" Sta. 21+65.00 to 21+93.58
** 7'-0" Sta. 21+93.58 to 23+10
** 7'-0" to 3'-6" Sta. 23+10 to 23+40
** 3'-6" Sta. 23+40 to 23+45

TYPICAL SECTION

CHANNEL #1 STA. 10+50 TO 14+70
OUTLET CHANNEL #1a STA. ~~19+65.94~~ TO 23+45.00

Scale: 1/2" = 1'-0" 18+65.94

Note:
Expansion Joints spaced at 30'-0" Max. (Continue reinforcing through joint-no roofing paper at joint). See Detail this Sht.

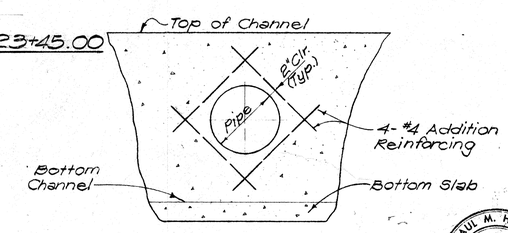

TYPICAL CONNECTION DETAIL OF PIPE TO CHANNEL

NOT TO SCALE

RAUL M. HIROTA
REGISTERED PROFESSIONAL ENGINEER
No. 4253
HAWAII, U.S.A.

THIS WORK WAS PREPARED BY ME OR UNDER MY SUPERVISION.

STATE OF HAWAII
DEPARTMENT OF TRANSPORTATION
HIGHWAYS DIVISION

DRAINAGE DETAILS

INTERSTATE ROUTE H-1
PROJ. NO. I-HI-1(66):10

Scale: As Shown Date:

SHEET No. 9 OF 17 SHEETS

85

FED. ROAD DIST. NO.	STATE	FED. AID PROJ. NO.	FISCAL YEAR	SHEET NO.	TOTAL SHEETS
HAWAII	HAW.	I-H1-(GQ)10 F-H1-(G7)10	1970	86	97

ROADWAY SCHEDULES

Roadway Lined Gutters & Ref. Sta.	TYPE	ESTIMATED QUANTITIES (L.F.)			REMARKS
3+51.87 (A) %Rt. to 13+14.20(A) %Rt.	7B		962		
16+65(A) %Rt. to 17+45(A) %Rt.	7B		80		
0+21 (B) %Rt. to 3+33 (B) %Rt.	7B		312		
2+60(C) %Rt. to 10+20(C) %Rt.	7A		760		
4+35(C) %Lt. to 5+70(G) %Lt.	7B		1235		Transition 4+35 to Inlet @ 4+75
14+43(C) %Lt. to 19+05(C) %Lt.	7B		462		Transition-Inlet@18+75 to 19+05
5+75 (E) %Rt. to 19+75 (E) %Rt	7C		1400		
3+72 (E) %Lt. to 6+54.(E) %Lt.	7B		282		
6+54 (E) %Lt. to 4+55 (H) %Lt	7C		1225		
1+01.10(F) %Rt. to 8+64 (F) %Rt.	7B		763		
40+35(M-R) %Lt. to 41+48(M-R) %Lt.	7B		113		Transition-Inlet@ 41+35 to 41+48
42+18 (M-R) %Lt. to 43+68(M-R) %Lt.	7B		150		Transition-Inlet@43+59 to 43+68
46+84 (M-R) %Rt. to 49+61(M-R) %Lt.	7B		277		Transition-Inlet@49+55 to 49+61
62+35 (H-1) %Lt. to 11+75 (F) %Rt.	7A		927		
90+75 (H-1) %Lt. to 102+88(H-1) %Lt.	7C		1213		Begin Gutter Transition@102+88
103+25(H-1) %Lt. to 110+65(H-1) %Lt.	7A		740		
124+00 (H-1) %Lt. to 145+45(H-1) %Lt.	7C		2145		Begin Gutter Transition @145+45
146+00 (H-1) %Lt. to 149+25(H-1) %Lt.	7A		325		
149+75 (H-1) %Lt. to 163+00 (H-1) %Lt.	7C		1325		Begin Gutter Transition @163+00
169+50 (H-1) %Lt. to 179+34 (H-1) %Lt.	7C		984		Begin Gutter Transition@169+50
77+50 (H-1) %Rt. to 81+75 (H-1) %Rt.	7B		425		Begin Gutter Transition @ 78+00
82+75 (H-1) %Rt. to 89+25 (H-1) %Rt.	7A		650		
90+25 (H-1) %Rt. to 101+65 (H-1) %Rt.	7C		1140		Begin Gutter Transition@101+65
102+15 (H-1) %Rt. to 110+65 (H-1) %Rt.	7A		850		
124+00 (H-1) %Rt. to 144+70 (H-1) %Rt.	7C		2070		Begin Gutter Transition @144+70
145+25 (H-1) %Rt. to 149+25 (H-1) %Rt.	7A		400		
149+75 (H-1) %Rt. to 162+90 (H-1) %Rt.	7C		1315		Begin Gutter Transition @ 162+90
163+25 (H-1) %Rt. to 168+75 (H-1) %Rt.	7A		550		
169+30 (H-1) %Rt. to 172+32 (H-1) %Rt.	7C		302		Begin Gutter Transition @ 169+30
172+92 (H-1) %Rt. to 188+50 (H-1) %Rt.	7A		1558		
179+36 (H-1) %Lt. to 187+00 (H-1) %Rt.	7A		764		
Gutter Transition & Reference Stations					
78+00 %Rt. to 77+00 %Rt.			100		
101+65 %Rt. to 102+15 %Rt.			50		
102+88 %Lt. to 103+28 %Lt.			40		
144+70 %Rt. to 145+20 %Rt.			50		
145+45 %Lt. to 145+95 %Lt.			50		
162+90 %Rt. to 163+40 %Rt.			50		
163+00 %Lt. to 163+50 %Rt.			50		
169+30 %Rt. to 168+80 %Rt.			50		
169+50 %Lt. to 169+28 %Lt.			22		
Gutter Connection & Reference Stations					
82+75 %Rt. to 81+75 %Rt.			100		
89+25 %Rt. to 90+25 %Rt.			100		
149+25 %Rt. to 149+75 %Rt.			50		
149+25 %Lt. to 149+75 %Lt.			50		
172+35 %Rt. to 172+92 %Rt.			60		

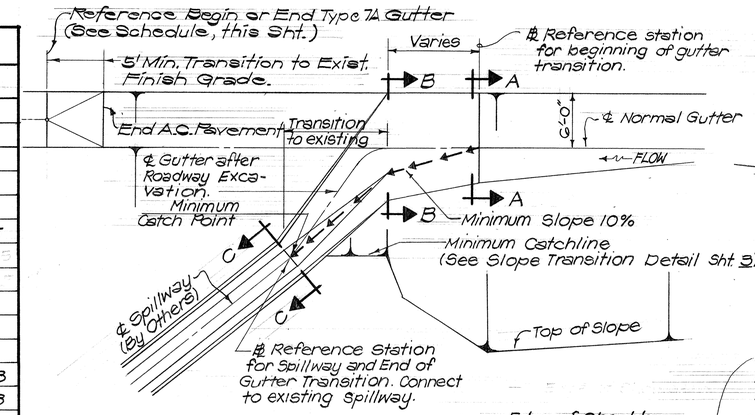

PLAN
Not To Scale

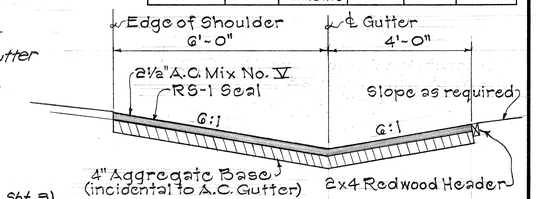

TYPICAL SECTION
TYPE 7B GUTTER
Scale: 1/2" = 1'-0"

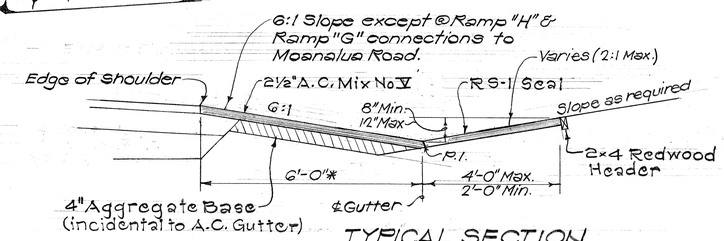

TYPICAL SECTION
TYPE 7C GUTTER
Scale: 1/2" = 1'-0"

* Dimension varies at the connection to the Moanalua Separation Structure Wing Wall. (See detail sht. 84).

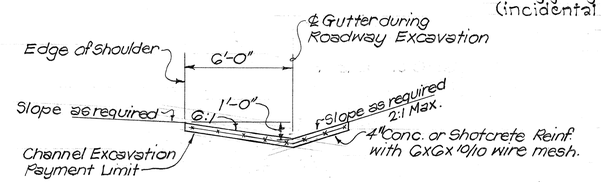

SECTION "A-A"
Scale: 1/4" = 1'-0"

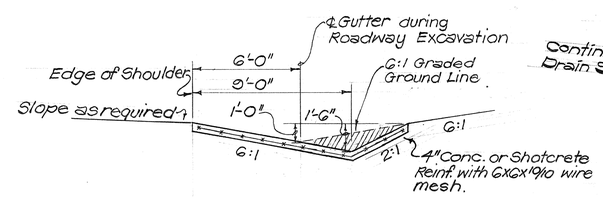

SECTION "B-B"
Scale 1/4" = 1'-0"

GUTTER TRANSITION
Scale As Shown.

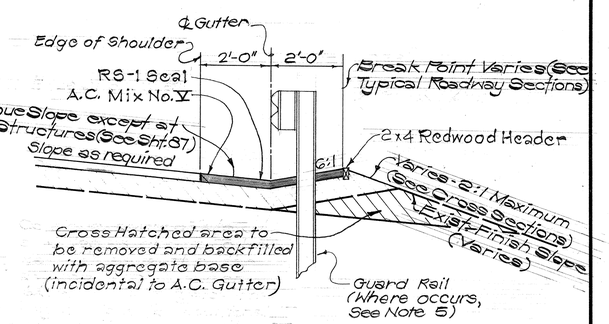

TYPICAL SECTION
TYPE 7A GUTTER
Not To Scale

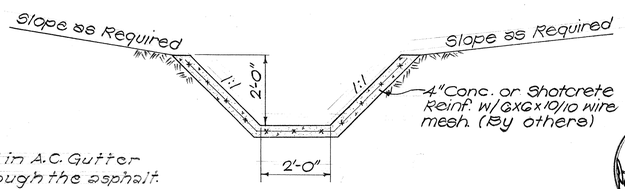

SECTION "C-C"
TYPICAL SPILLWAY SECTION
(BY OTHERS)
Scale: 1/2" = 1'-0"

NOTES:

1. Reverse plan view when flow is in direction opposite to that shown.
2. The spillway shall not be a part of this contract.
3. Where Guard Rail is to be installed in the concrete gutter section a 10"x10" size opening shall be provided in the slab at the Guard Rail post location. After the Guard Rail Post has been placed in position, the remaining portion of the opening shall be filled with asphaltic concrete Mix V (Asphaltic concrete to be incidental to Class "B" concrete).
4. Type 7A, 7B & 7C Gutters shall be paid for by the linear feet.
5. Where Guardrail Post is to be installed in A.C. Gutter section the post shall be driven through the asphalt. Any damage done to the asphalt during this operation shall be repaired by the contractor at his expense.
6. Payment for gutter transitions and gutter connections shall be paid for by the linear ft. and considered as Type 7C Gutter.
7. All wire mesh reinforcing shall be incidental to the concrete lining.

ORIGINAL PLAN	SURVEY PLOTTED BY	DATE
	DRAWN BY	
	TRACED BY	
NOTE BOOK	DESIGNED BY	
	QUANTITIES BY	
No.	CHECKED BY	

PAUL M. HIROTA
REGISTERED PROFESSIONAL ENGINEER
No. 1224
HAWAII, U.S.A.

THIS WORK WAS PREPARED BY ME OR UNDER MY SUPERVISION.

STATE OF HAWAII
DEPARTMENT OF TRANSPORTATION
HIGHWAYS DIVISION

DRAINAGE DETAILS

INTERSTATE ROUTE H-1
PROJ. NO. I-H1-1(GQ):10

Scale: As Shown Date:

SHEET No. 10 OF 17 SHEETS

PRINTED ON NO. 1000H CLEARPRINT

FED. ROAD DIST. NO.	STATE	FED. AID PROJ. NO.	FISCAL YEAR	SHEET NO.	TOTAL SHEETS
HAWAII	HAW.	I-H1-1(GC):10 I-H1-1(GC):10	1970	87	97

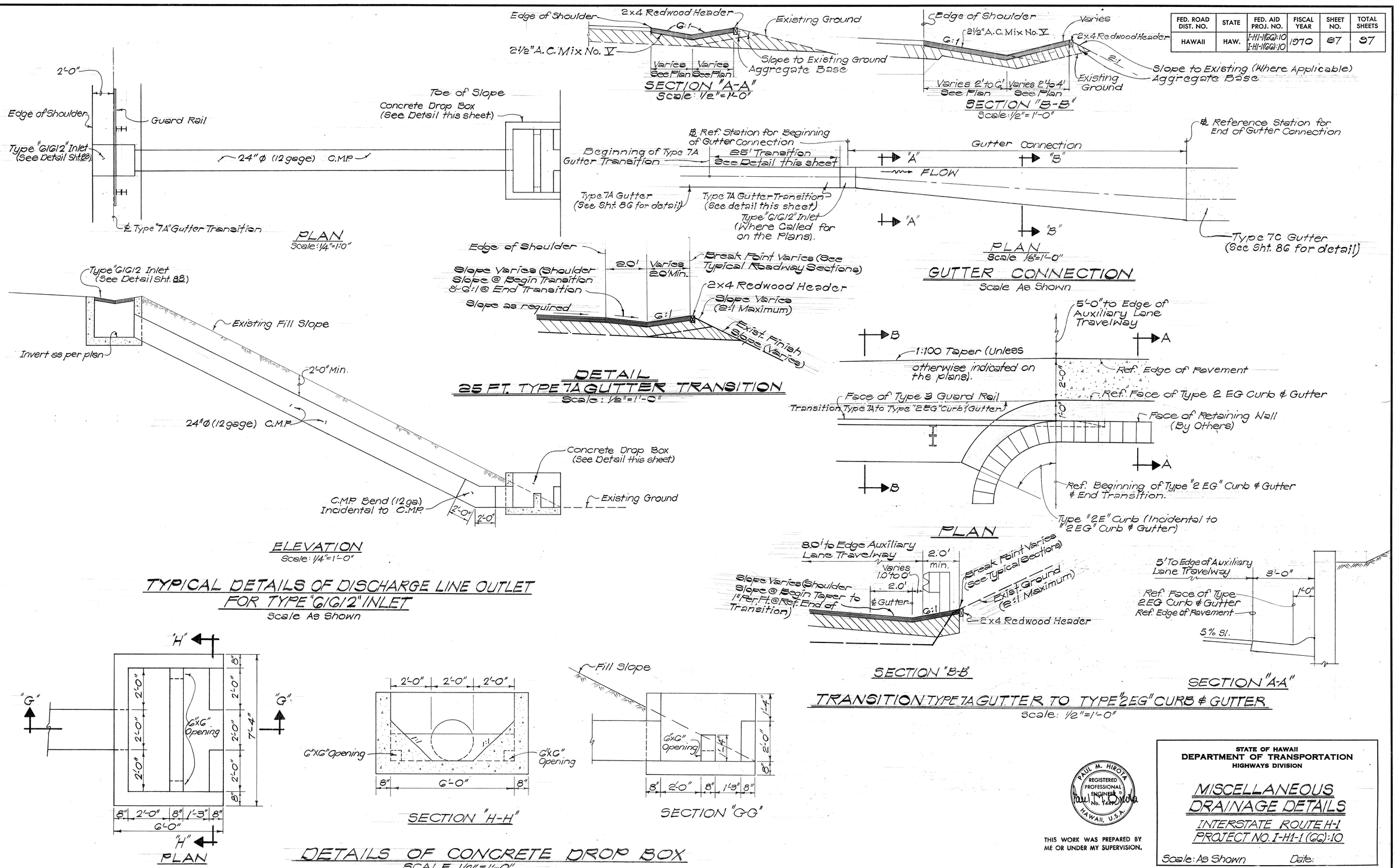

ORIGINAL PLAN	SURVEY PLOTTED BY	DATE
	DRAWN BY	"
	TRACED BY	"
NOTE BOOK	TYPEWRITTEN BY	"
No.	QUANTITIES BY	"
	CHECKED BY	"

PRINTED ON NO. 1000H CLEARPRINT

PAUL M. HIROTA
REGISTERED PROFESSIONAL ENGINEER
No. 1490
HAWAII, U.S.A.

THIS WORK WAS PREPARED BY ME OR UNDER MY SUPERVISION.

STATE OF HAWAII
DEPARTMENT OF TRANSPORTATION
HIGHWAYS DIVISION

MISCELLANEOUS DRAINAGE DETAILS

INTERSTATE ROUTE H-1
PROJECT NO. I-H1-1(GC):10

Scale: As Shown Date:

SHEET No. 11 OF 17 SHEETS

FED. ROAD DIST. NO.	STATE	FED. AID PROJ. NO.	FISCAL YEAR	SHEET NO.	TOTAL SHEETS
HAWAII	HAW.	I-HI-1(66):10 I-HI-1(67):10	1970	88	97

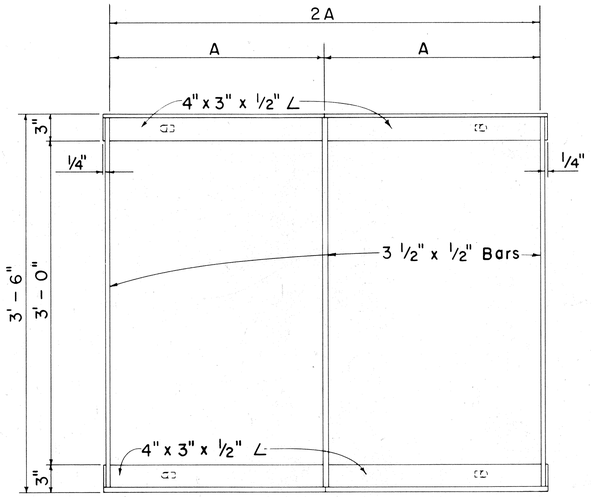

PLAN
Scale: 1 1/2" = 1'-0"

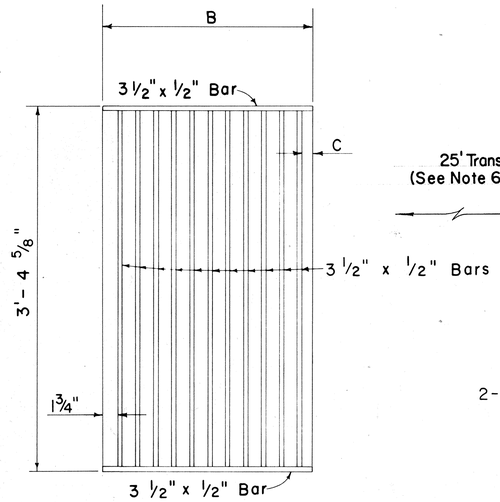

PLAN
Scale: 1 1/2" = 1'-0"

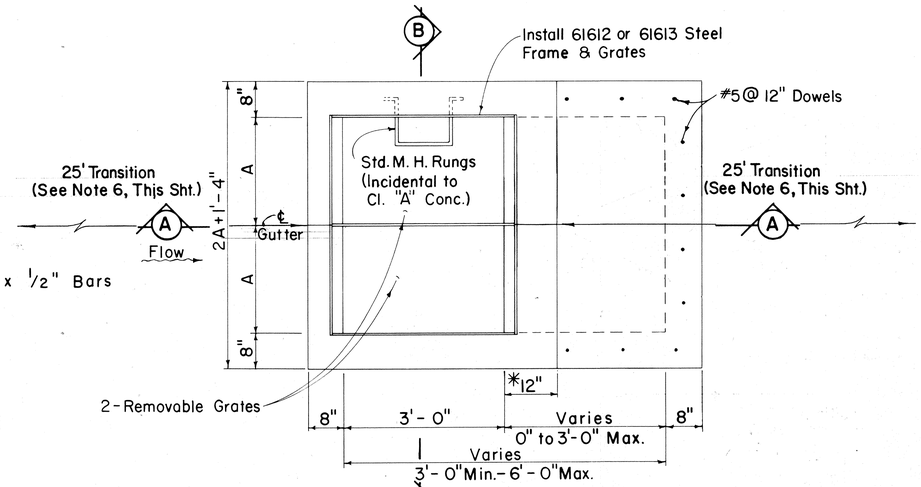

PLAN

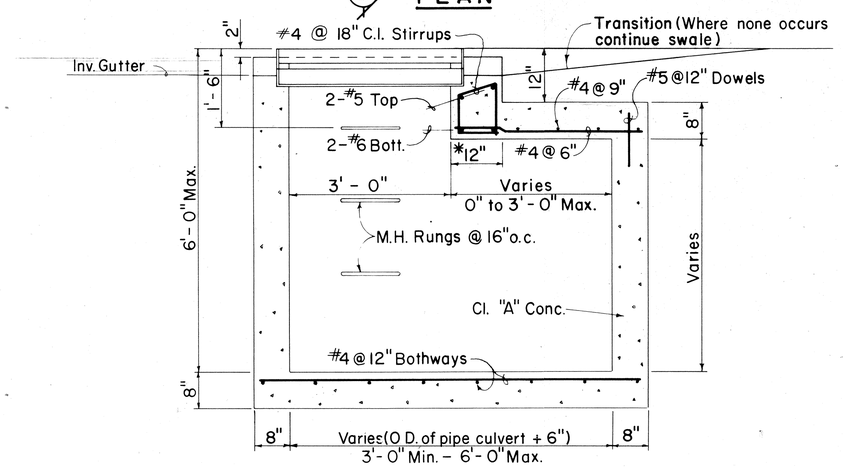

SECTION A - A

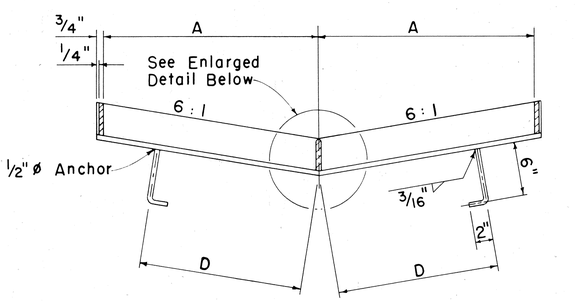

SECTION
Scale: 1 1/2" = 1'-0"

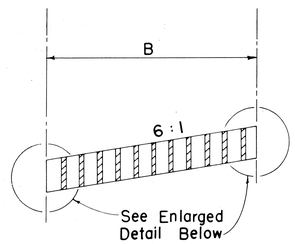

SECTION
Scale: 1 1/2" = 1'-0"

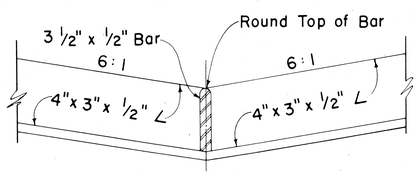

FRAME
Scale: 3" = 1'-0"

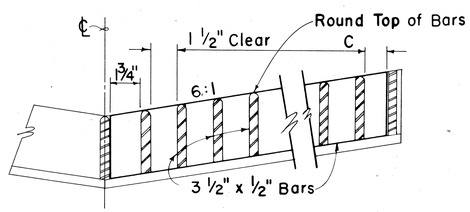

GRATE
Scale: 3" = 1'-0"

DETAILS OF TYPE 61612 OR 61613 STEEL FRAME AND GRATES

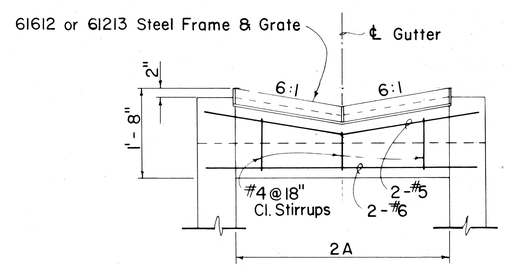

SECTION B - B

DETAIL OF 61612 OR 61613 DROP INTAKE

Scale: 3/4" = 1'- 0"

*For Minimum size box of 3'-0" only use 8" and eliminate reinforcing steel shown in the top portion.

GENERAL NOTES

1. Grates and Frames shall be hot dip galvanized after fabrication, see specifications.
2. All welds 3/8" unless otherwise noted.
3. Refer to "Spacing Table" for Types 61612 & 61613 Drop Intake and Frame & Grates dimensions.
4. The Frame & Grate materials shall conform to the specifications of ASTM Designation Structural Steel A283, Grade D and the Standard Specifications.
5. Culvert shall leave Drop Intake from any position and any direction indicated by plans or ordered by the Engineer. Culverts may both enter and leave Drop Intake so that Drop Intake will act as manhole.
6. Where 61612 Inlets are installed at Type 7A gutter sections provide 25' minimum transition up and down stream of the structure. See sheet 87 for transition details.

SPACING TABLE

TYPE	NO. BARS	A	B	C	D
61612	11	2'- 0"	1'- 11 1/2"	1 1/4"	1'- 6"
61613	17	3'- 0"	2'- 11 1/2"	1 1/8"	2'- 0"

ORIGINAL PLAN	
SURVEY PLOTTED BY	
DRAWN BY	
TRACED BY	
DESIGNED BY	
QUANTITIES BY	
CHECKED BY	
DATE	
NOTE BOOK	
No.	

STATE OF HAWAII
DEPARTMENT OF TRANSPORTATION
HIGHWAYS DIVISION

DRAINAGE DETAIL

DETAILS OF 61612 & 61613 DROP INTAKE

INTERSTATE ROUTE H-1
PROJ. NO. I-HI-1(66):10

Scales: As Noted Date:

SHEET No. 12 OF 17 SHEETS

88

FED. ROAD DIST. NO.	STATE	FED. AID PROJ. NO.	FISCAL YEAR	SHEET NO.	TOTAL SHEETS
HAWAII	HAW.	I-H1-1(66)10 I-H1-1(67)10	1970	208890	97

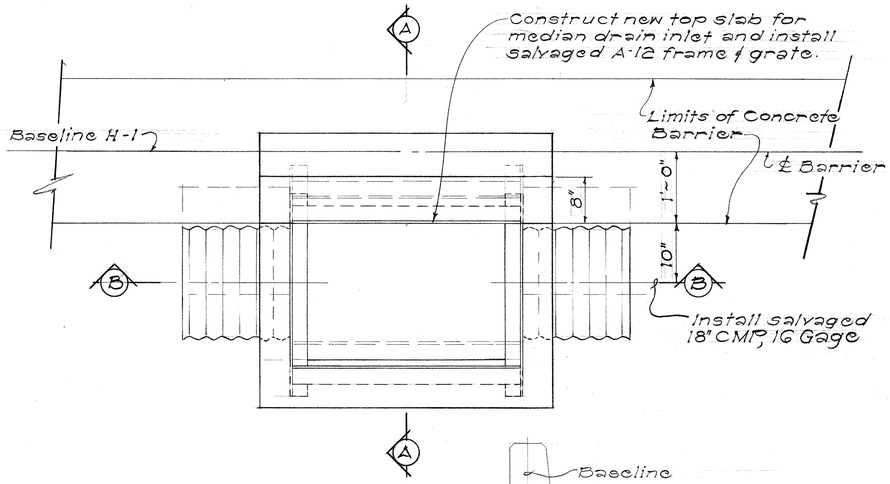

PLAN

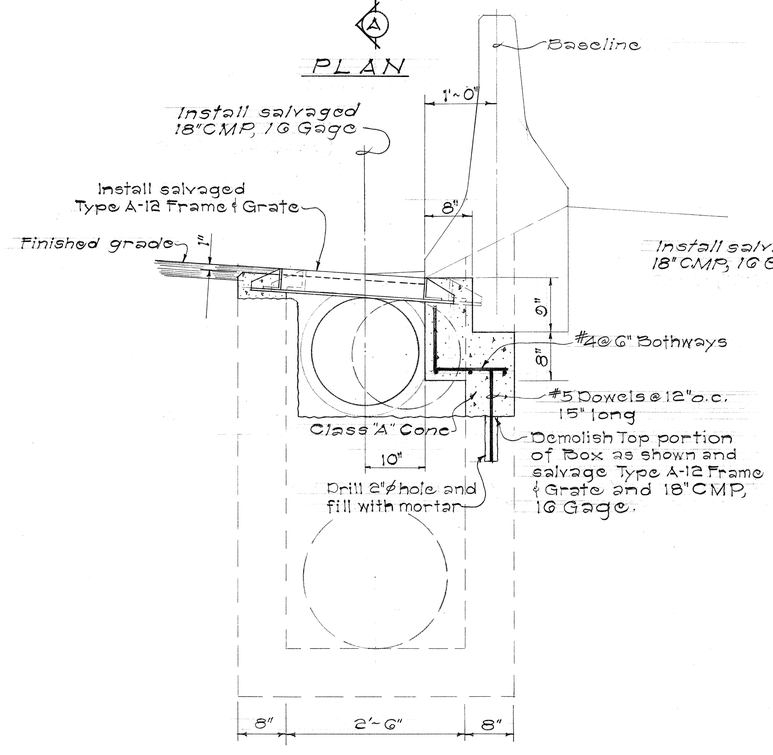

SECTION "A-A"

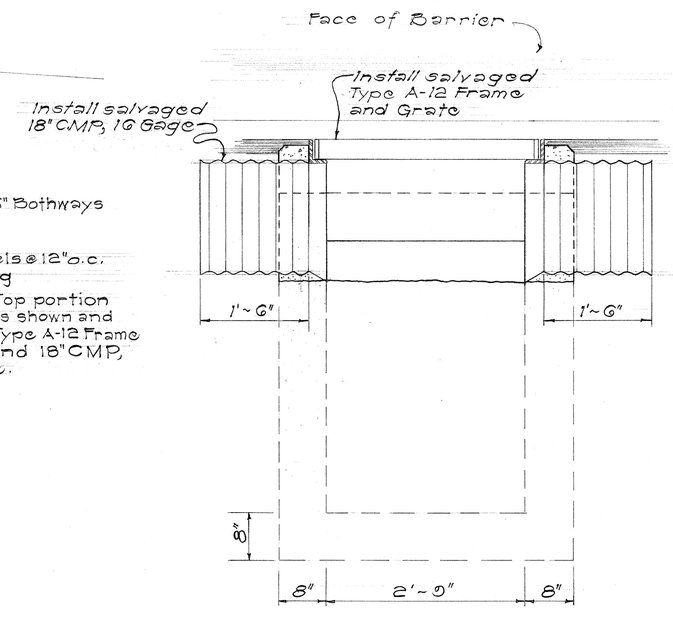

SECTION "B-B"

MODIFICATION TO EXISTING MEDIAN DRAIN INLET STRUCTURE

Scale: 1" = 1'-0"

ESTIMATED QUANTITIES

LOCATION	Struct. Exc.	Class "A" Conc.	Reinf. Steel	
	C.Y.	C.Y.	Lbs.	
℄ Sta. 75+25	1	0.5	20	
℄ Sta. 77+50	1	0.5	20	
℄ Sta. 97+50	1	0.5	20	
℄ Sta. 99+00	1	0.5	20	

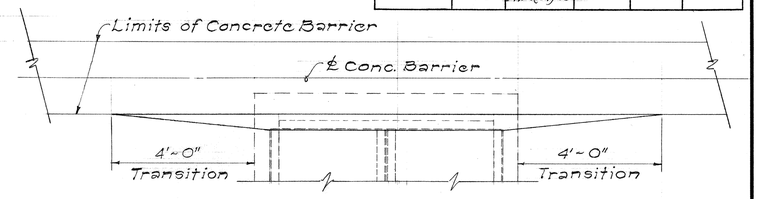

PLAN

Scale: 1/2" = 1'-0"

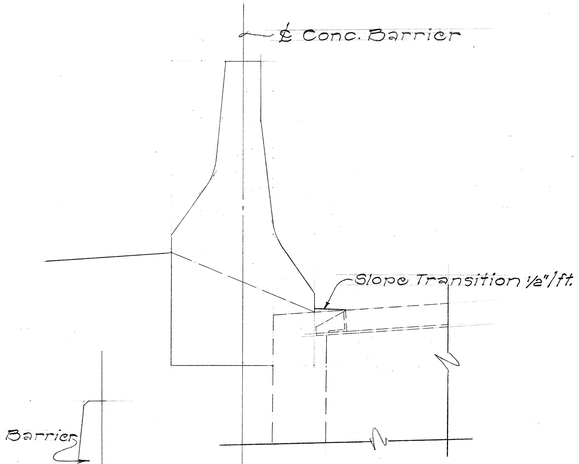

ELEVATION

Scale: 1" = 1'-0"

SLOPE TRANSITION FOR EXISTING MEDIAN CATCH BASIN

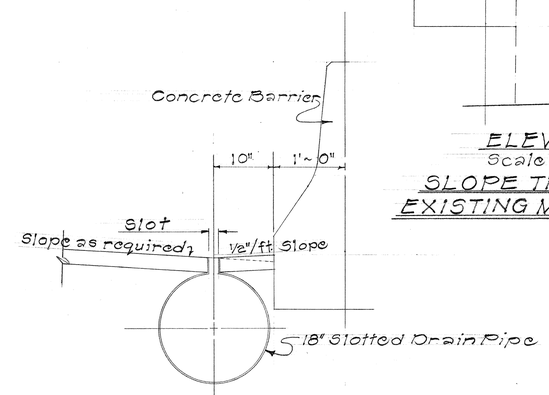

TYPICAL SECTION OF SLOTTED DRAIN ALONG CONCRETE BARRIER

Scale: 1" = 1'-0"

THIS SHEET IS A SUPPLEMENT TO THE CONTRACT PLANS.

ORIGINAL PLAN		
	SURVEY PLOTTED BY	DATE
	SURVEY BY	" "
	TRACED BY	" "
NOTE BOOK	DESIGNED BY	" "
	QUANTITIES BY	" "
No.	CHECKED BY	" "

STATE OF HAWAII
DEPARTMENT OF TRANSPORTATION
HIGHWAYS DIVISION

DRAINAGE DETAILS

MEDIAN DRAIN INLET STRUCTURE

Interstate Route H-1
Project No. I-H1-1(66):10

Scale as Shown Date: April 1970

SHEET No. OF SHEETS

C 0 8 8 S (1)

K+E CRYSTALENE® LA 2920 TRACING PAPER

FED. ROAD DIST. NO.	STATE	FED. AID PROJ. NO.	FISCAL YEAR	SHEET NO.	TOTAL SHEETS
HAWAII	HAW.	I-HI-1(66):10 I-HI-1(67):10	1970	89	97

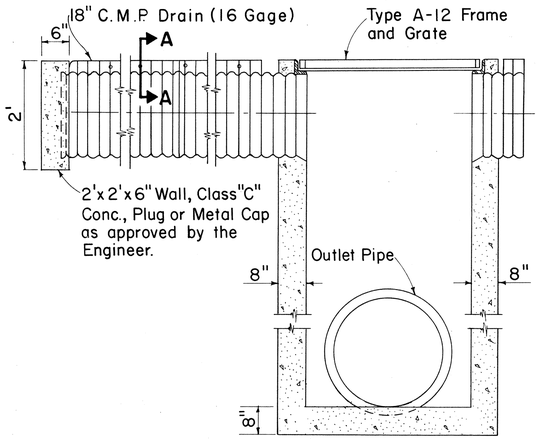

MEDIAN DRAIN INLET STRUCTURE

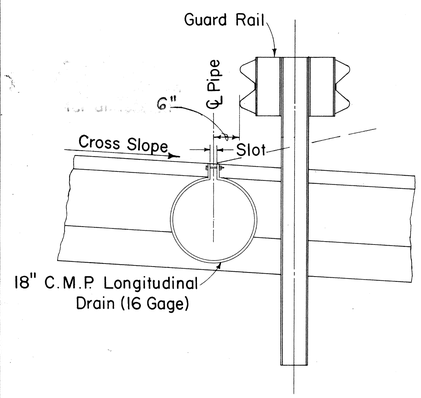

TYPICAL CROSS SECTION

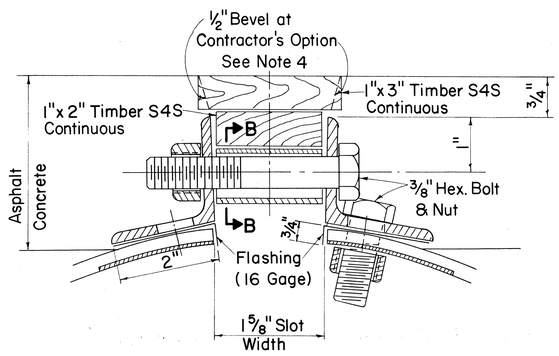

SECTION A-A

ANGLE SLOT DETAIL

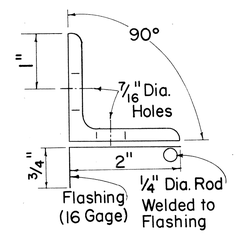

ALTERNATIVE SLOT ANGLE

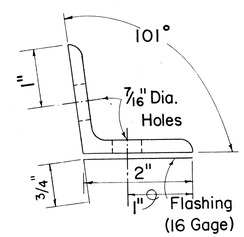

SLOT ANGLE

2"x2"x3/16" ANGLE DETAILS

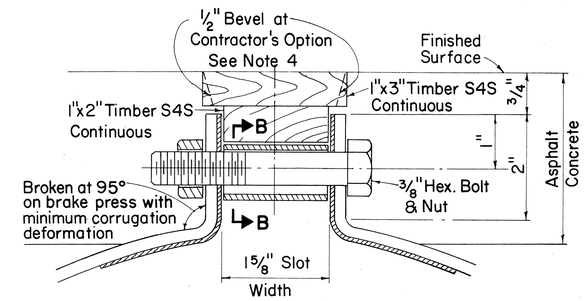

SECTION A-A

FLANGED SLOT DETAIL

GENERAL NOTES

1. All bolts, nuts, angles and pipe spacers to be galvanized.
2. 1"x2" and 1"x3" S4S timber to remain in place until final clean-up operations are complete.
3. Each drain section shall be assembled with flange slot coupling band and bolted thru drain section flange.
4. If the Contractor elects to use bevel, a 1"x4" S4S timber shall be used in lieu of 1"x3" S4S timber.
5. 20' units of 18" slotted C. M. P. drain shall be fabricated and all nuts and bolts tightened prior to beginning field installation.
6. The Contractor shall take precaution to prevent adhesion between timber placed in the slotted drain as shown on Section A-A and the asphalt concrete paving.
7. The Contractor may elect to use either alternative method of fabrication.
8. The slotted C. M. P. shall not be installed until after any adjacent P.C.C. pavement has been completed.

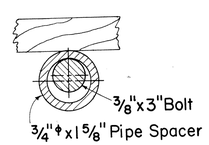

SECTION B-B

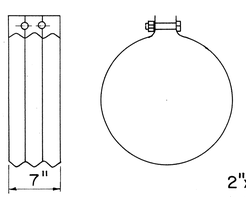

FLANGE SLOT COUPLING BAND

See Note 3

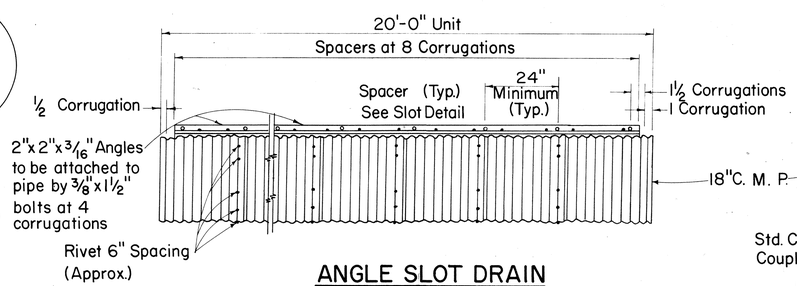

ANGLE SLOT DRAIN

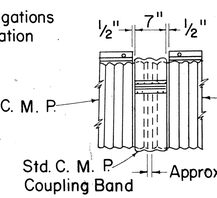

JOINT DETAIL

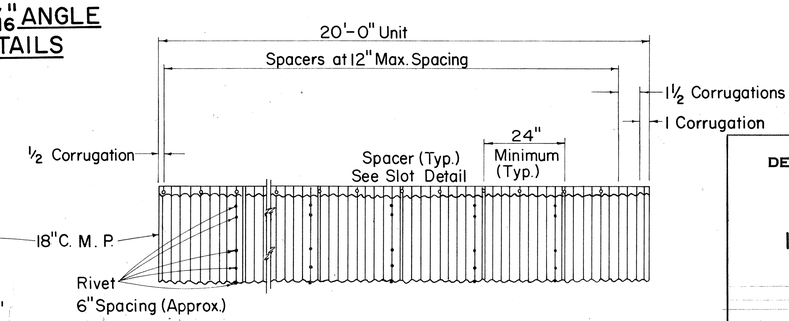

FLANGED SLOT DRAIN

STATE OF HAWAII
DEPARTMENT OF TRANSPORTATION
HIGHWAYS DIVISION

STANDARD DETAILS

18" SLOTTED C. M. P. DRAINS

INTERSTATE ROUTE H-1
PROJECT NO. I-HI-1(66):10

Not To Scale Date:

SHEET No. 13 OF 17 SHEETS

ORIGINAL PLAN	SURVEY PLOTTED BY	DATE
	DRAWN BY	"
	TRACED BY	"
NOTE BOOK	DESIGNED BY	"
	QUANTITIES BY	"
No.	CHECKED BY	"

FED. ROAD DIST. NO.	STATE	FED. AID. PROJECT	FISCAL YEAR	SHEET NO.	TOTAL SHEETS
HAWAII	HAWAII	I-H1-1(66):10 I-H1-1(67):10	1970	20	27

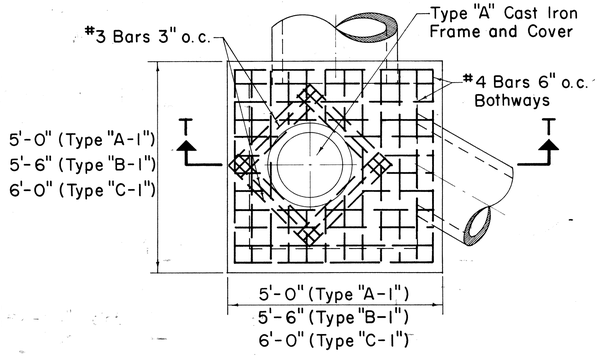

PLAN

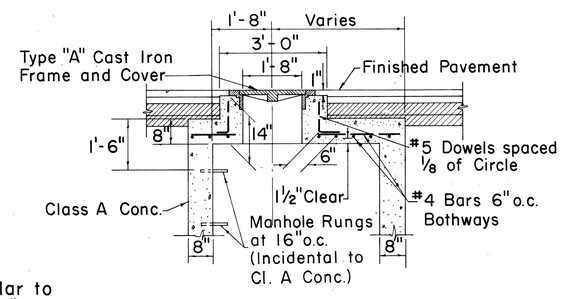

SECTION T-T

Note:
Bottom detail similar to Type "A", "B", & "C".

TYPE "A-1", "B-1", & "C-1" STORM DRAIN MANHOLE TOP DETAIL UNDER PAVEMENT

Scale: ½" = 1'-0"

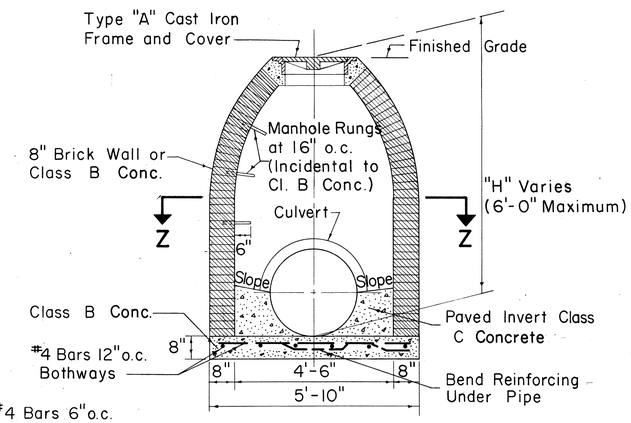

SECTION Y-Y

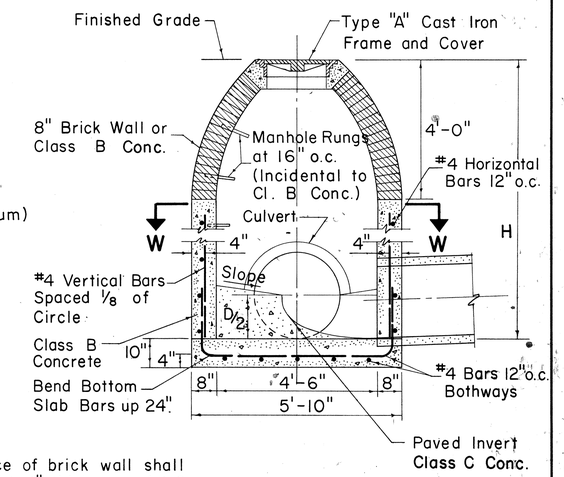

SECTION X-X

NOTE:

1. Exterior surface of brick wall shall be plastered with 1" thickness of 1:2 Cement Mortar.
2. Number, size and direction of culvert at manhole to be as shown on plans.
3. Paved invert not required at drop manholes.
4. All Class C Concrete to be incidental to Class B Concrete.

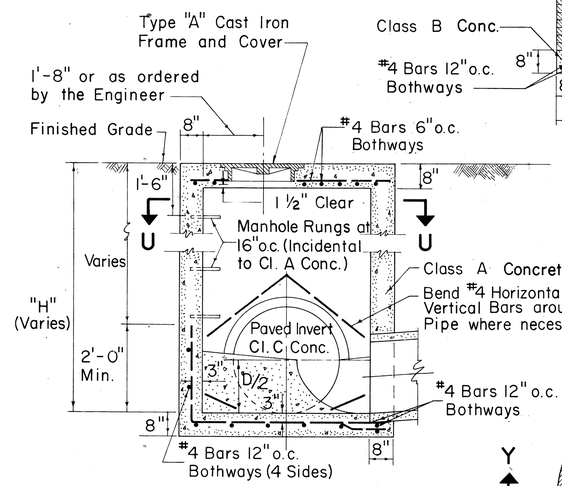

SECTION V-V

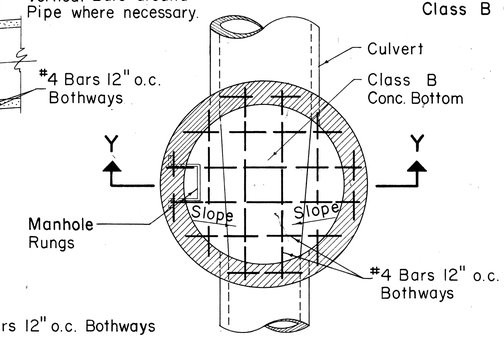

SECTION Z-Z

TYPE "D" STORM DRAIN MANHOLE

Scale: ½" = 1'-0"

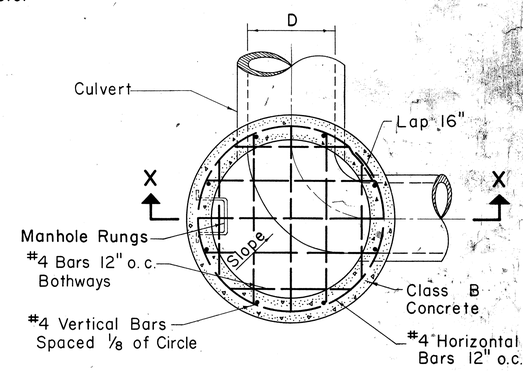

SECTION W-W

TYPE "E" STORM DRAIN MANHOLE

Scale: ½" = 1'-0"

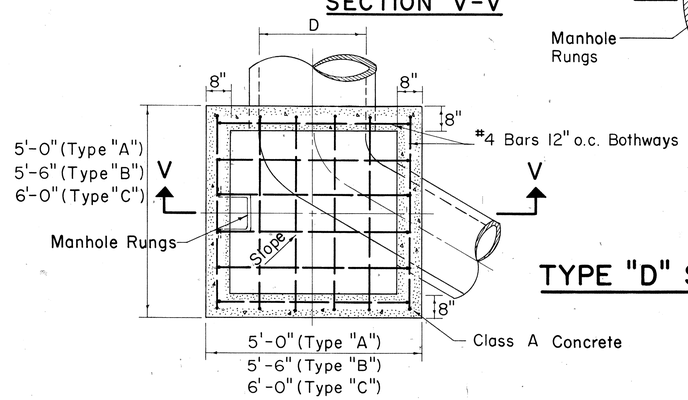

SECTION U-U

TYPE "A", "B", & "C" S.D.M.H.

Scale: ½" = 1'-0"

GENERAL NOTES

1. Culvert shall enter and leave S.D.M.H. from any position and in the direction indicated by the plans or ordered by the Engineer.
2. Manhole Rungs (16" o.c.) are required when "H" is greater than 4'-6". Only one rung (12" from the bottom) is required if "H" is 4'-6" or less. Type "A" C.I. Frame and Cover and Manhole Rungs may be placed at any location as ordered by the Engineer.

STATE OF HAWAII
DEPARTMENT OF TRANSPORTATION
HIGHWAYS DIVISION

STANDARD DETAILS

STORM DRAIN MANHOLES

Scales: As Noted — Date: July, 1969

SHEET NO. 14 OF 17 SHEETS

2/17/59
8/12/59

FED. ROAD DIST. NO.	STATE	FED. AID PROJ. NO.	FISCAL YEAR	SHEET NO.	TOTAL SHEETS
HAWAII	HAW.	T-H1-1(66):10 T-H1-1(67):10	1970	91	97

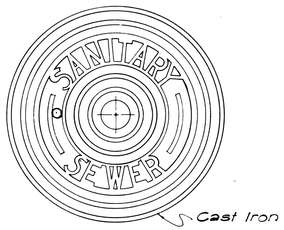

TOP VIEW OF COVER

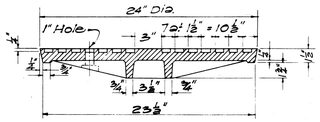

SECTION

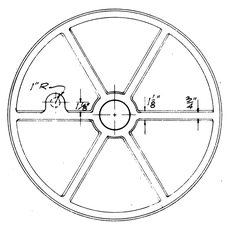

BOTTOM VIEW OF COVER

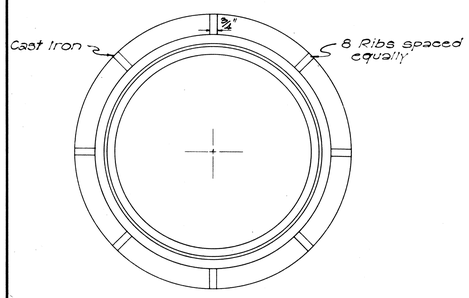

PLAN OF RIM

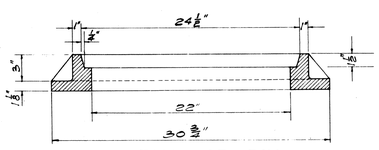

SECTION OF RIM

DETAILS OF TYPE "S" CAST IRON FRAME AND COVER

SCALE: 1-1/2" = 1'-0"

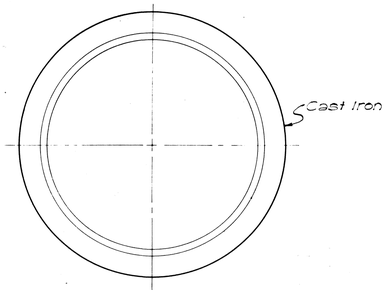

PLAN OF RIM

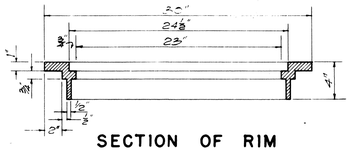

SECTION OF RIM

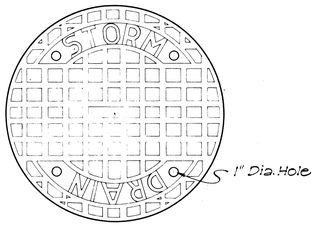

TOP VIEW OF COVER

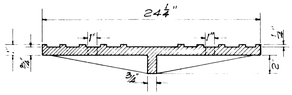

SECTION

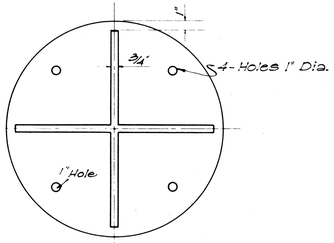

BOTTOM VIEW OF COVER

DETAILS OF TYPE "B" CAST IRON FRAME AND COVER

SCALE: 1-1/2" = 1'-0"

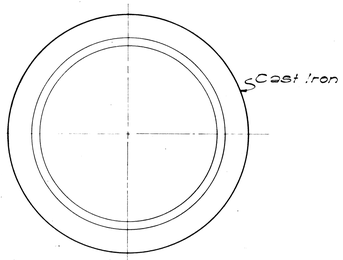

PLAN OF RIM

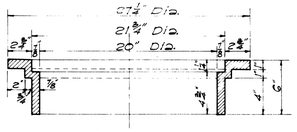

SECTION OF RIM

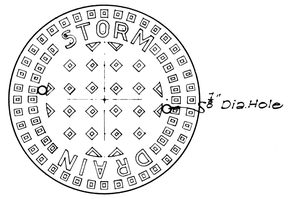

TOP VIEW OF COVER

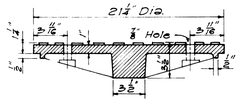

SECTION

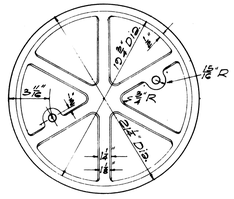

BOTTOM VIEW OF COVER

DETAILS OF TYPE "A" CAST IRON FRAME AND COVER

SCALE: 1-1/2" = 1'-0"

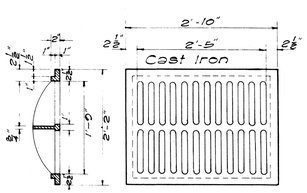

SECTION

TOP VIEW

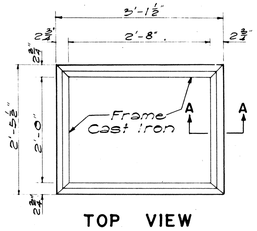

TOP VIEW

TYPE C C.I. FRAME AND GRATE

SCALE: 3/4" = 1'-0"

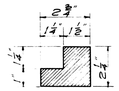

SECTION "A-A"
SCALE 3" = 1'-0"

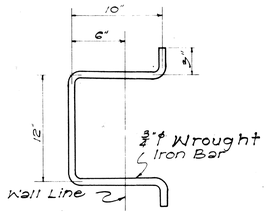

MANHOLE RUNG

SCALE: 1-1/2" = 1'-0"

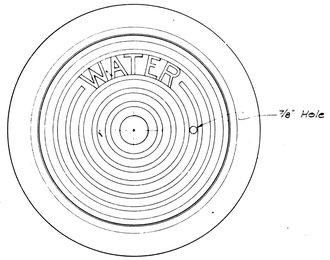

PLAN OF FRAME AND COVER

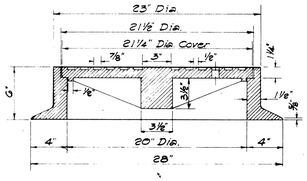

SECTION OF FRAME AND COVER

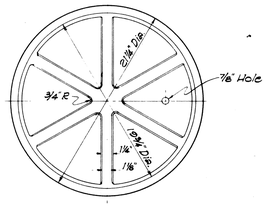

BOTTOM VIEW OF COVER

DETAILS OF TYPE "W" CAST IRON FRAME AND COVER

SCALE: 1-1/2" = 1'-0"

GENERAL NOTES

1. THE TYPE "S" CAST IRON FRAME AND COVER SHOWN ON THIS SHEET IS EQUIVALENT TO THE CITY AND COUNTY OF HONOLULU, DIVISION OF SEWERS' TYPE "SA" CAST IRON MANHOLE FRAME AND COVER.
2. THE TYPE "W" CAST IRON FRAME AND COVER SHOWN ON THIS SHEET IS EQUIVALENT TO THE CITY AND COUNTY OF HONOLULU, BOARD OF WATER SUPPLY'S CAST IRON MANHOLE FRAME AND COVER, 20" SIZE.

STATE OF HAWAII
DEPARTMENT OF TRANSPORTATION
HIGHWAYS DIVISION

STANDARD DETAILS
CATCH BASIN AND MANHOLE CASTINGS

Scale: As Noted — Date: July, 1969

SHEET No 15 OF 17 SHEETS

ORIGINAL PLAN	SURVEY PLOTTED BY	DATE
	DESIGNED BY	
	DRAWN BY	
	TRACED BY A. Calistro	
NOTE BOOK	QUANTITIES BY	
No.	CHECKED BY	

91

FED. ROAD DIST. NO.	STATE	FED. AID PROJ. NO.	FISCAL YEAR	SHEET NO.	TOTAL SHEETS
HAWAII	HAW.	I-H1-1(66):10 I-H1-1(67):10	1970	92	97

NOTES:

1. For typical Headwall details see sheet 89.
2. Face of new Headwall to be flush with face of exist. Headwall.
3. *Top of new Headwall to be at same elevation as top of exist. Headwall.
4. Invert elevations shown on the plans and details for the 3-72"×44" C.M.P. Arch culverts are approximate. The contractor shall set the inverts of the 3 Arch culverts at the same invert elevation as the existing 6'-0"×3'-6" box culvert.
5. The contractor shall remove all rocks, debris and sediment in the existing 6'-0"×3'-6" box culvert and payment shall be considered incidental to the various contract items.

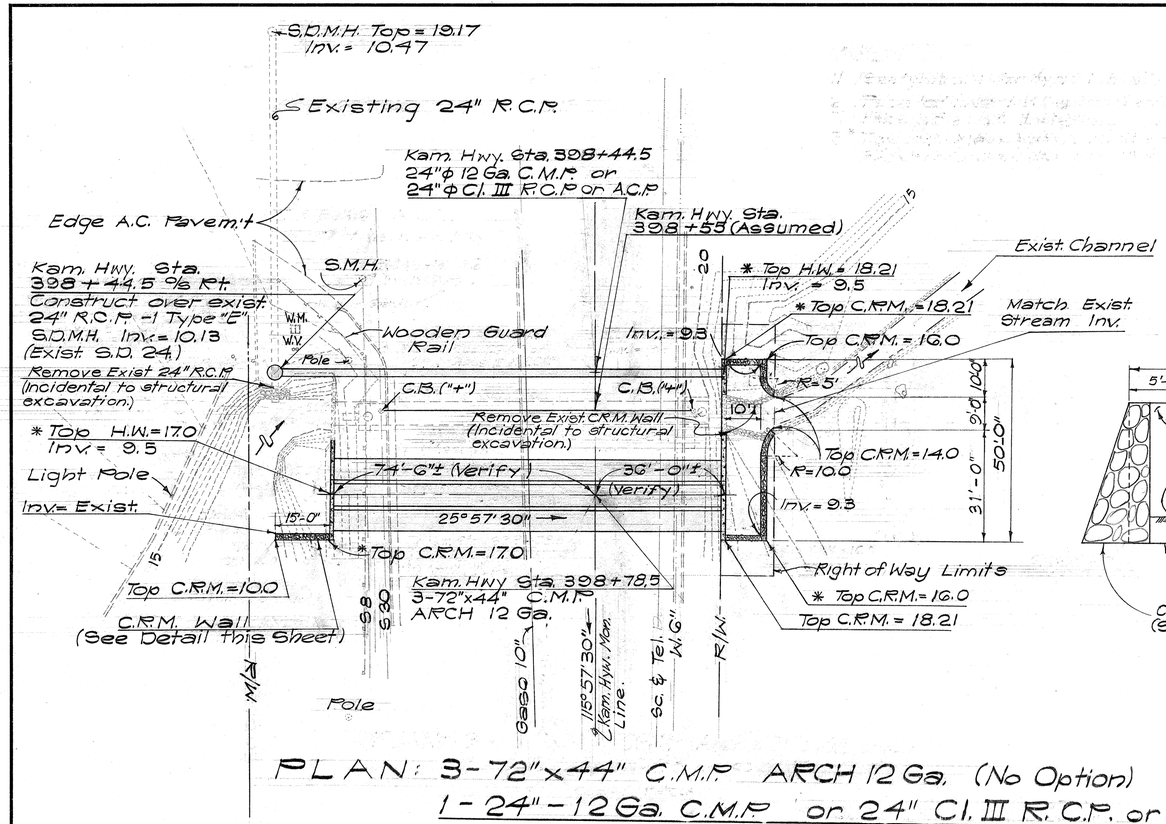

PLAN: 3-72"×44" C.M.P. ARCH 12 Ga. (No Option)
1-24"-12 Ga. C.M.P. or 24" Cl. III R.C.P. or A.C.P.
Scale: 1" = 20'

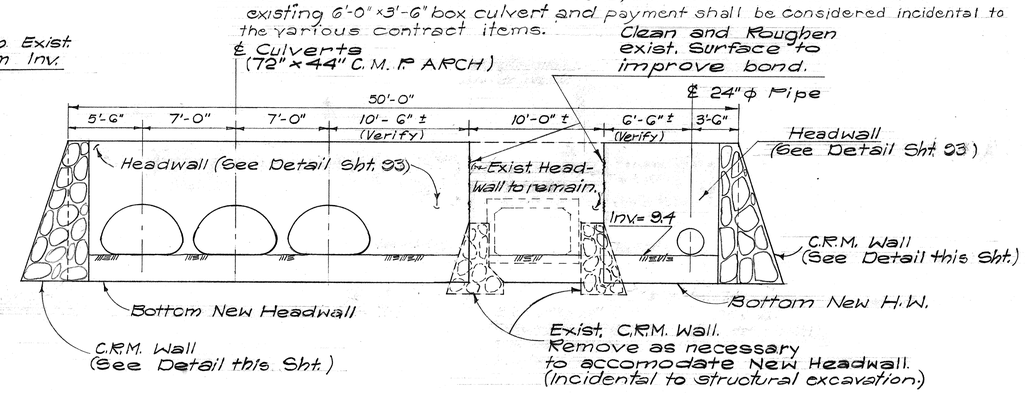

OUTLET ELEVATION
Scale: 3/16" = 1'-0"

ESTIMATED QUANTITIES:

Class "A" Conc.	22 C.Y.
Class "B" Conc.	2 C.Y.
Reinforcing Steel	2000 L.B.
Cement Rubble Masonry	90 C.Y.
Structure Excavation	1874 C.Y.
Brick wall for S.D.M.H.	4 L.F.
72"×44" C.M.P. ARCH	332 L.F.
24"φ 12 Ga. C.M.P. or 24"φ Class III R.C.P. or A.C.P.	125 L.F.
Type "A" C.I. Frame and Cover	1 Ea.

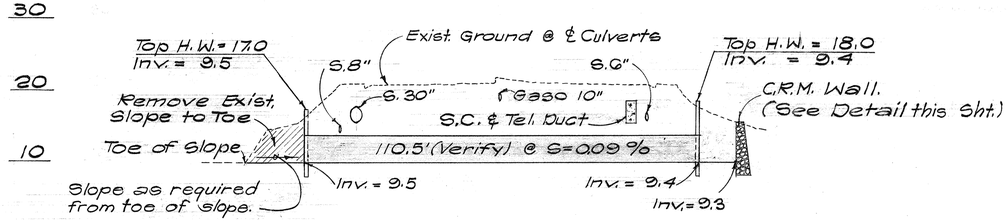

PROFILE: 3-72"×44" C.M.P. ARCH 12 Ga.
Scale: Hor. 1" = 20'
Vert. 1" = 10'

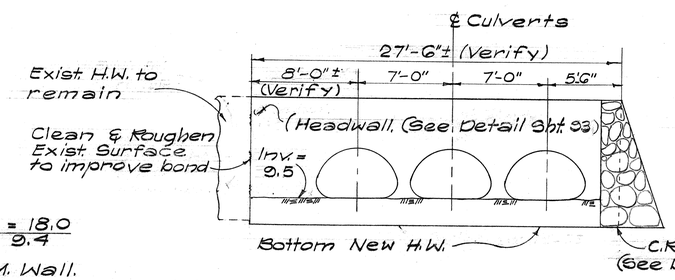

INLET ELEVATION
Scale: 3/16" = 1'-0"

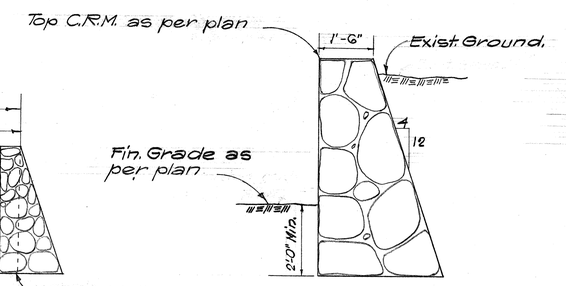

C.R.M. WALL DETAIL
Scale: 1/2" = 1'-0"

ORIGINAL PLAN	
SURVEY PLOTTED BY	
DRAWN BY	
TRACED BY	
DESIGNED BY	
NOTE BOOK	QUANTITIES BY
No.	CHECKED BY
DATE	

PAUL M. HIROTA
REGISTERED PROFESSIONAL ENGINEER
No. 7
HAWAII, U.S.A.

THIS WORK WAS PREPARED BY ME OR UNDER MY SUPERVISION.

STATE OF HAWAII
DEPARTMENT OF TRANSPORTATION
HIGHWAYS DIVISION

3-72"×44" C.M.P. ARCH 12 Ga.
1-24"-12 Ga. C.M.P. OR 24" CL. III R.C.P. OR A.C.P. CROSSING
KAMEHAMEHA HIGHWAY

INTERSTATE ROUTE H-1
PROJ. NO. I-H1-1(66):10

Scale: As Shown Date:

SHEET No. 16 OF 17 SHEETS

92

PRINTED ON NO. 1000H CLEARPRINT

FED. ROAD DIST. NO.	STATE	FED. AID PROJ. NO.	FISCAL YEAR	SHEET NO.	TOTAL SHEETS
HAWAII	HAW.	I-HI-I(66):10 I-HI-I(67):10	1970	93	97

Note: 1. Circular Pipe shown. Dimensions & Reinforcing for Pipe Arch are similar.
2. All reinforcing not shown shall be similar to details for single barrel headwall.

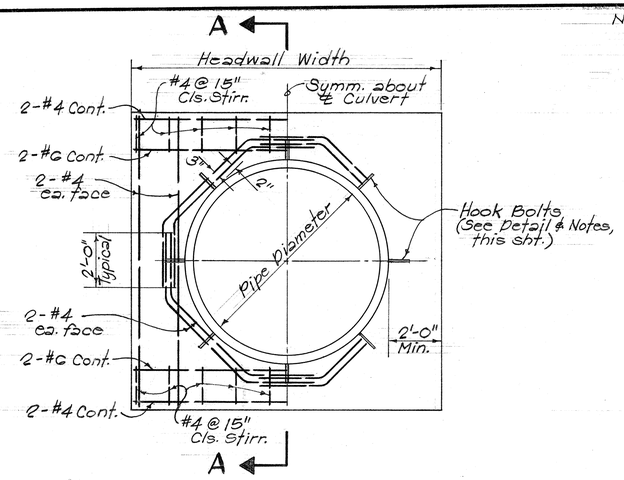

FRONT ELEVATION - SINGLE BARREL

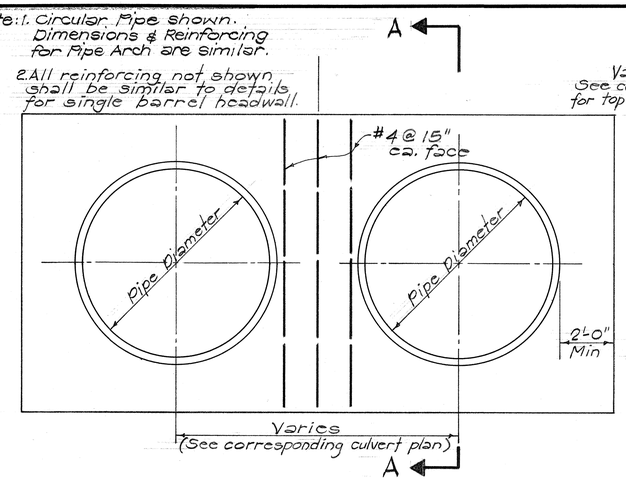

FRONT ELEVATION - MULTIPLE BARREL

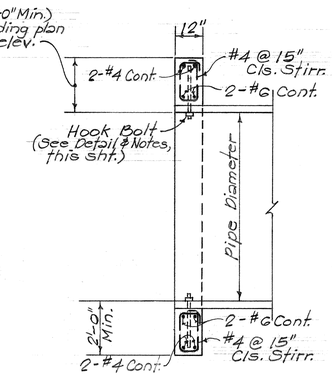

SECTION "A-A"

TYPICAL PIPE CULVERT HEADWALL DETAILS

Scale: 3/8" = 1'-0"

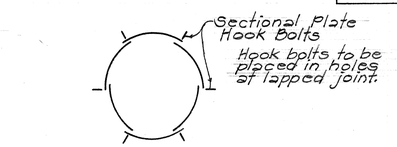

Note: Hook bolts shall be used only with Sectional Plate Pipe Culverts.

LOCATION OF HOOK BOLTS AT HEADWALL

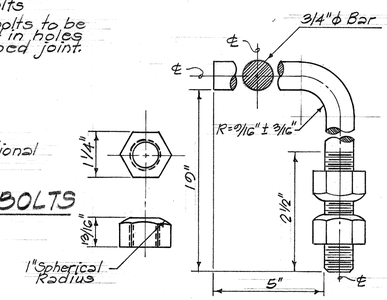

HOOK BOLT DETAIL

Not to Scale

NOTE:
Hook Bolt material shall meet the current ASTM A-307. Thread shall be American Standard Coarse Thread Series, Class 2, Free Fit. Bolts shall be galvanized to meet current ASTM Specification A-153. The galvanizing on thread portion shall not prevent turning the nut by hand.
Nuts shall be carbon steel hot dip galvanized to meet ASTM Specification A-153. Nut threads shall be American Standard Coarse Thread Series (1/64 maximum oversize), cleaned after galvanizing to provide a free running fit on the Class 2 bolt. Nuts shall be 1 1/4" across flats, 19/16" thick, curve crowned to approximately 1" radius.

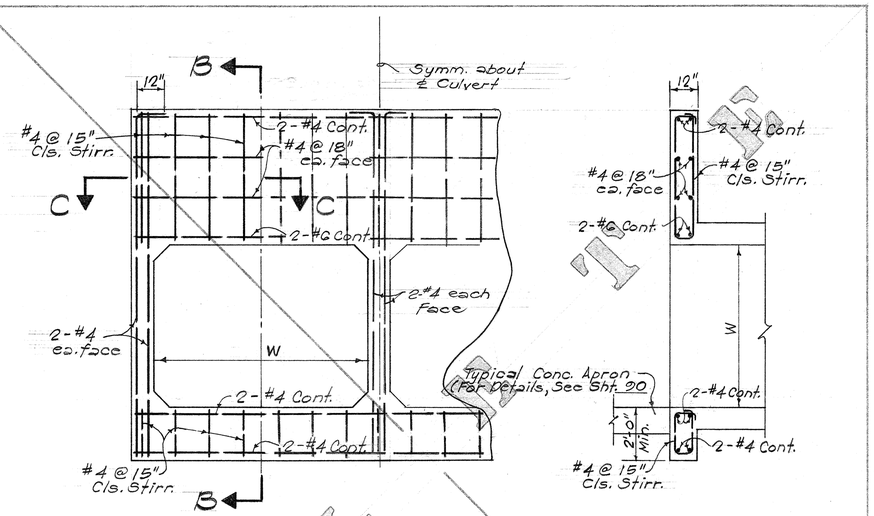

FRONT ELEVATION

SECTION "B-B"

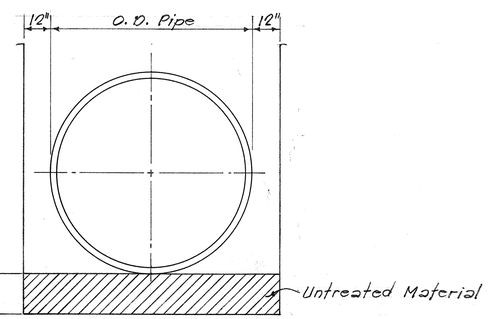

TYPICAL SECTION
UNTREATED BASE FOR PIPE FOUNDATION

Scale: 3/8" = 1'-0"

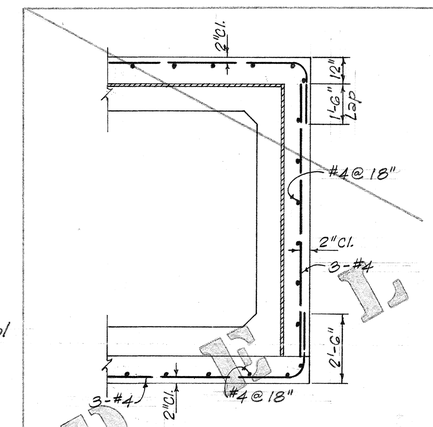

TYPICAL COLLAR DETAIL

Scale: 3/8" = 1'-0"

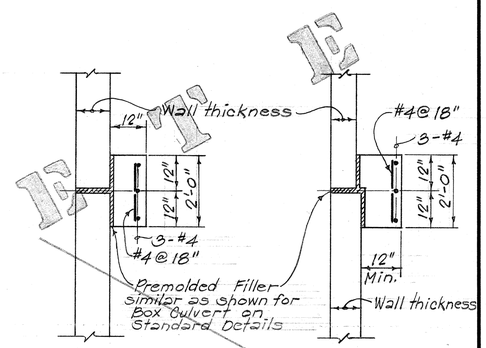

TYPICAL AT VARYING WALL THICKNESS

TYPICAL SECTION

Scale: 1/2" = 1'-0"

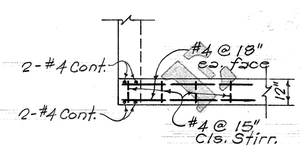

SECTION "C-C"

TYPICAL BOX CULVERT HEADWALL DETAILS

Scale: 3/8" = 1'-0"

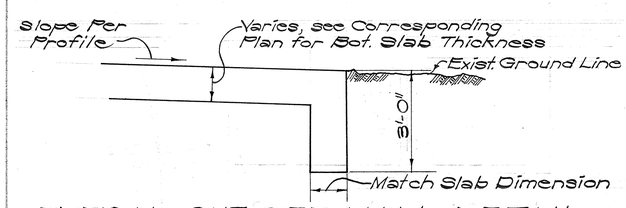

TYPICAL CUT OFF WALL DETAIL

Not to Scale

PAUL M. HIROTA
REGISTERED PROFESSIONAL ENGINEER
No. 1442
HAWAII, U.S.A.

THIS WORK WAS PREPARED BY ME OR UNDER MY SUPERVISION.

STATE OF HAWAII
DEPARTMENT OF TRANSPORTATION
HIGHWAYS DIVISION

TYPICAL CULVERT DETAILS

INTERSTATE ROUTE H-1
PROJ. NO. I-HI-I(66):10

Scale: As Shown Date:

SHEET No. 17 OF 17 SHEETS

ORIGINAL PLAN		DATE
	SURVEY PLOTTED BY	
	DRAWN BY	
	TRACED BY	
	DESIGNED BY	
NOTE BOOK	QUANTITIES BY	
No.	CHECKED BY	

PRINTED ON NO. 1000H CLEARPRINT

93

FED. ROAD DIST. NO.	STATE	FED. AID PROJ. NO.	FISCAL YEAR	SHEET NO.	TOTAL SHEETS
HAWAII	HAW.	I-H1-1(66)10 I-H1-1(67)10	1970	936-1	97

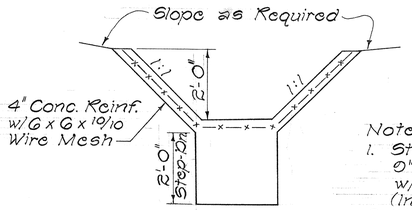

Note:
1. Step down to be 9" Thick Reinf. w/6 x 6 x 19/10 Wire Mesh (Incidental to Channel
2. Wire Mesh to be Incidental to Channel

END OF CHANNEL
Scale: 1/2" = 1'-0"

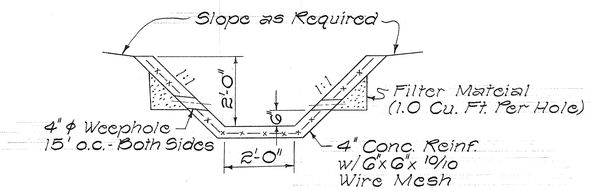

TYPICAL SECTION
Channel Sta. 0+02 to 1+40
Scale: 1/2" = 1'-0"

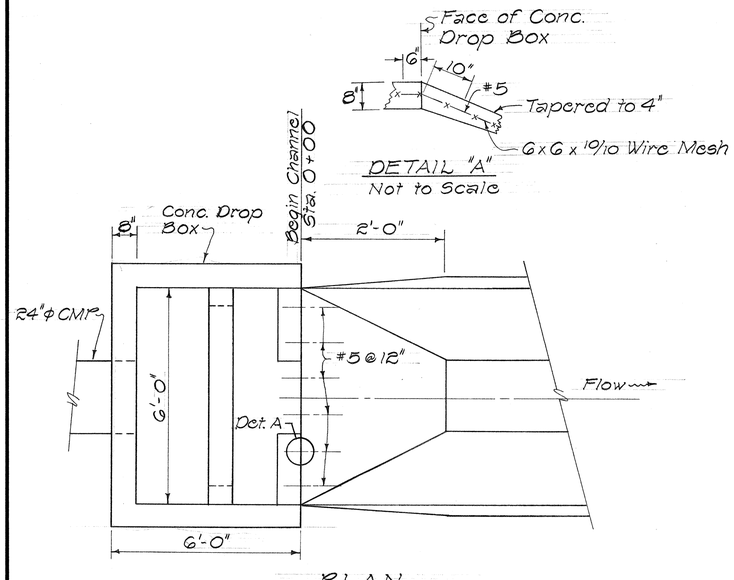

DETAIL "A"
Not to Scale

PLAN
Scale: 1/2" = 1'-0"

C.C.O. #31

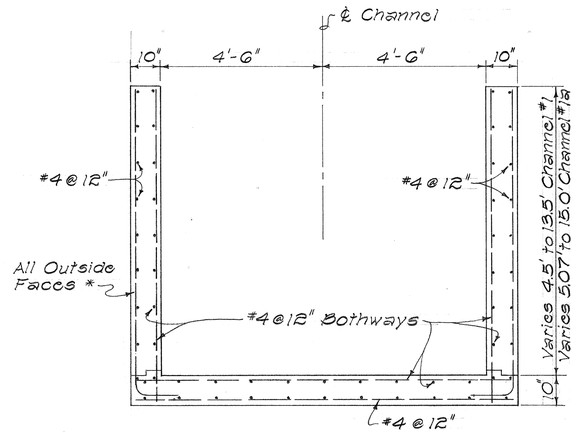

PARTIAL TYPICAL SECTION REINFORCEMENT
Channel #1 Sta. 14+70 to 15+55.11
Outlet Channel #1a Sta. 18+15.94 to 15+65.94
Scale: 1/2" = 1'-0"

* Outside Faces
#4 @ 12" Sta. 14+70 to 15+05.11
Sta. 18+65.94 to 19+30
#6 @ 12" Sta. 15+05.11 to 15+30.11
Sta. 18+40.94 to 18+65.94
#8 @ 12" Sta. 15+30.11 to 15+55.11
Sta. 18+15.94 to 18+40.94

C.C.O. #5

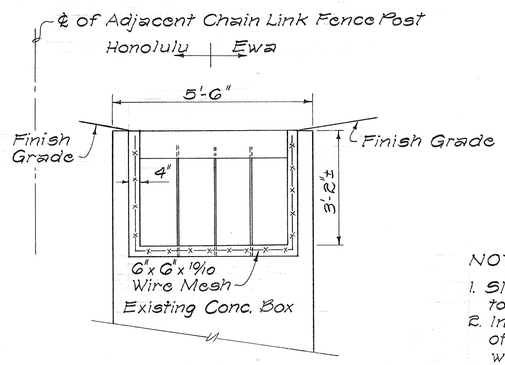

CHANNEL STA. 0+00
Scale: 1/2" = 1'-0"

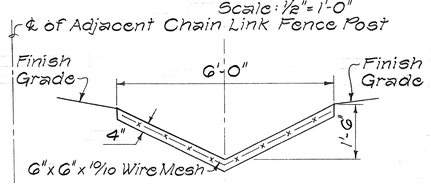

TYPICAL SECTION
Channel Sta. 0+16 To End of Channel
Scale: 1/2" = 1'-0"

NOTES:
1. Slope "Finish Grade" toward channel.
2. Inlet on Honolulu side of box to be plugged with concrete and backfilled to finish grade (incidental to channel).
3. Relocate chain link fence to cross channel at Sta. 0+00.
4. Grading in the vicinity of the channel and wire mesh shall not be paid for but shall be considered incidental to the channel.

C.C.O. #27

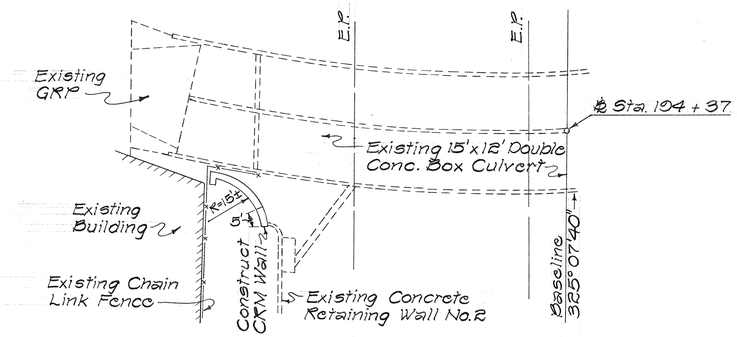

PLAN ~ CRM WALL LEFT OF ℄ STA. 194+15 ±
Scale: 1" = 20'

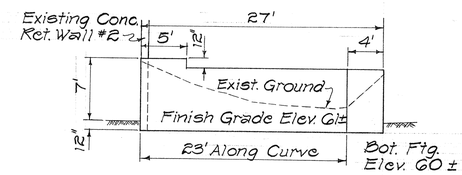

CRM WALL ~ PROFILE
Scale: 1/8" = 1'-0"

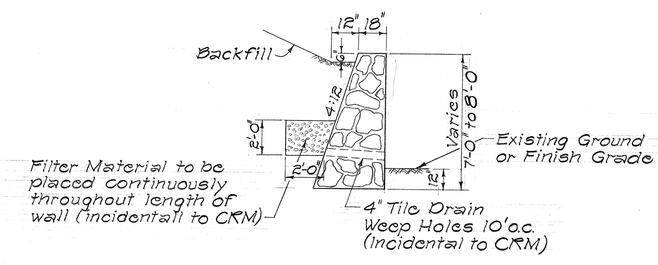

CRM WALL ~ TYPICAL SECTION
Scale: 1/4" = 1'-0"

C.C.O. #11

This sheet is a supplement sheet incorporated into the plans at the time of the "As Built" posting.

STATE OF HAWAII
DEPARTMENT OF TRANSPORTATION
HIGHWAYS DIVISION

DRAINAGE DETAILS

INTERSTATE ROUTE H-1
PROJECT NO. I-H1-1(66):10

Scale: As Shown Date:

SHEET No. OF SHEETS

93 S-1

ORIGINAL PLAN	SURVEY PLOTTED BY	DATE
	DRAWN BY	"
	TRACED BY	"
NOTE BOOK	DESIGNED BY	"
No.	QUANTITIES BY	"
	CHECKED BY	"

K+E CRYSTALENE® TRACING PAPER