FED. ROAD DIST. NO.	STATE	FED. AID PROJ. NO.	FISCAL YEAR	SHEET NO.	TOTAL SHEETS
HAWAII	HAW.	I-HI-1(75)8	1969	51	181

ELECTRICAL SITE PLAN

SCALE: 1" = 500'

ELECTRICAL SYMBOL LIST

	CONDUIT OR DUCTLINE, NEW
A	DUCTLINE INDICATOR SEE DUCT SECTION
EP2	NEW ELECTRIC POLE BY CONTRACTOR
	POLE LENGTH 45 / 3 POLE CLASS; POLE FRAMING P-1; POLE FRAMING P-3
	EXISTING ELECTRIC POLE TO REMAIN
	EXISTING ELECTRIC POLE TO BE REMOVED
L-10 / P1 / 30-3	INDICATES GUY LENGTH; NEW GUY AND ANCHOR DEADMAN & ROD; INDICATES 30 FT CLASS 3 WOOD POLE
ETC	EXISTING TELEPHONE DUCTLINE OR CABLE
ETC	EXISTING TELEPHONE CABLE TO BE REMOVED BY HTCO
	NEW ELECTRIC POLE BY UTILITY COMPANY POST HOLE BY CONTRACTOR
	NEW ELECTRIC MANHOLE
	NEW SPLICE PIT FOR HAWAIIAN TELEPHONE CO. TRANSPACIFIC CABLE.
	NEW PULLBOX FOR H.T.CO. H.T.CO #453 T.B. FURNISHED BY H.T.CO. INSTALLED BY CONTRACTOR
	STUB & CAP CONDUIT
	NEW OVERHEAD ELECTRIC PRIMARY BY CONTRACTOR
E	EXISTING ELECTRIC PRIMARY OVERHEAD
E	EXISTING ELECTRIC PRIMARY OVERHEAD TO BE REMOVED
L=15	DEAD END. LENGTH - 15'

NOTE: CONDUIT BENDS FOR UTILITY CO. POLES FURNISHED BY UTILITY CO., INSTALLED BY CONTRACTOR.

DONALD T. K. FU REGISTERED PROFESSIONAL ENGINEER No. 1010 HAWAII, U.S.A.

THIS WORK WAS PREPARED BY ME OR UNDER MY SUPERVISION.

STATE OF HAWAII
DEPARTMENT OF TRANSPORTATION
HIGHWAYS DIVISION

WAIAWA INTERCHANGE

ELECTRICAL SITE PLAN
SYMBOL LIST

F.A.I. Proj No. I-HI-1(75):8

Scales: As shown Date:

SHEET No. E-1 OF 17 SHEETS

ORIGINAL PLAN		DATE
	SURVEY PLOTTED BY	
	DRAWN BY	
	TRACED BY	
NOTE BOOK	DESIGNED BY	
	QUANTITIES BY	
No.	CHECKED BY	

FED. ROAD DIST. NO.	STATE	FED. AID PROJ. NO.	FISCAL YEAR	SHEET NO.	TOTAL SHEETS
HAWAII	HAW.	I-HI-1(79)8	1969	ADD. 52	181

Revised: February 18, 1970

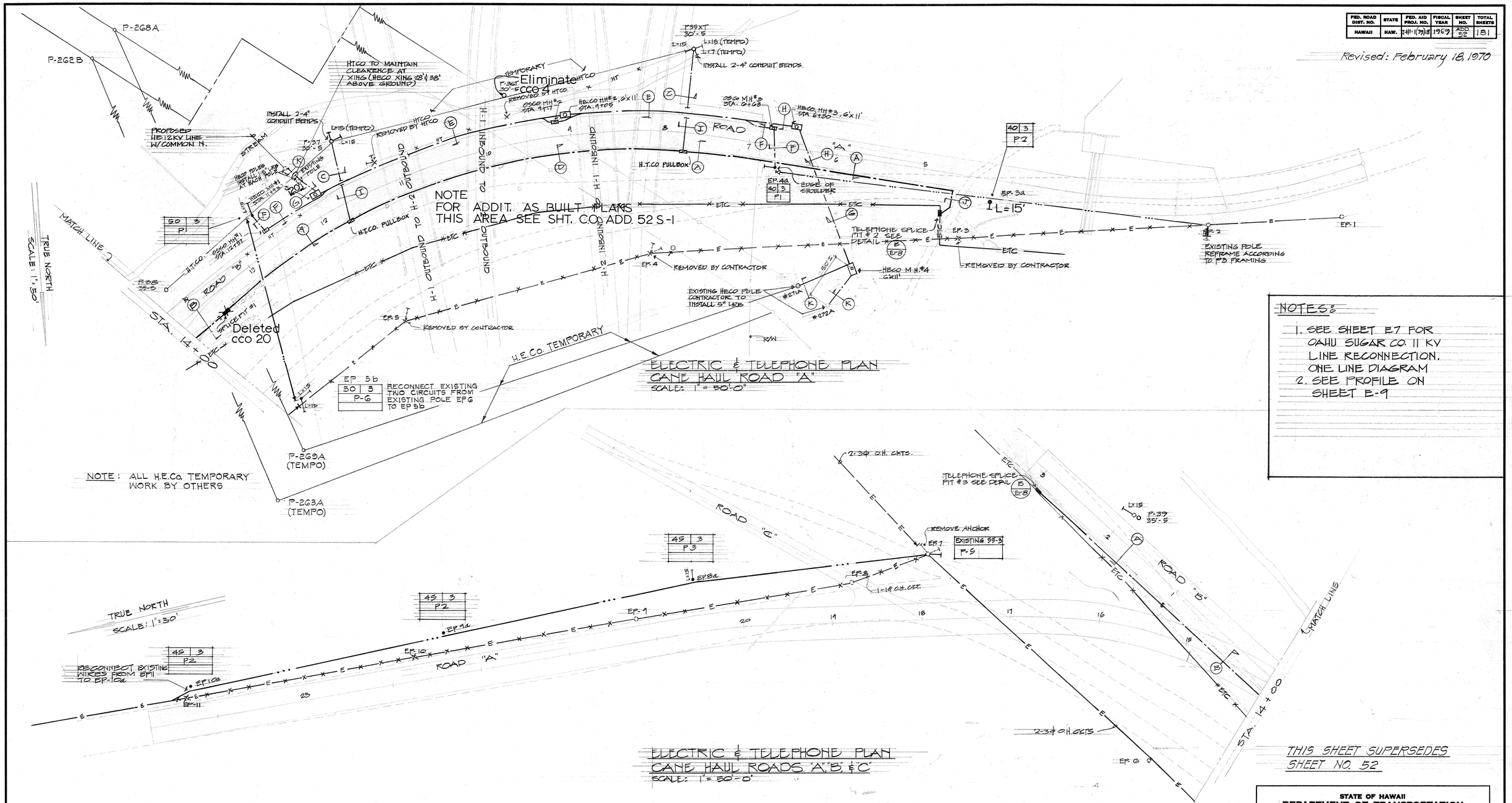

NOTES:

1. SEE SHEET E7 FOR OAHU SUGAR CO. 11 KV LINE RECONNECTION, ONE LINE DIAGRAM
2. SEE PROFILE ON SHEET E-9

THIS SHEET SUPERSEDES SHEET NO. 52

APPROVED BY

7-29-69
HAWAIIAN ELECTRIC CO. DATE

6-25-69
HAWAIIAN TELEPHONE CO. DATE

6/27/69
OAHU SUGAR CO. DATE

DONALD T. K. HO REGISTERED PROFESSIONAL ENGINEER No. 1010 HAWAII, U.S.A.

THIS WORK WAS PREPARED BY ME OR UNDER MY SUPERVISION.

STATE OF HAWAII
DEPARTMENT OF TRANSPORTATION
HIGHWAYS DIVISION

KAIAWA INTERCHANGE

CANE HAULING ROAD
ELECTRICAL & TELEPHONE PLAN

F.A.I. Proj. No. I-HI-1 (79): 8
Scales: As Shown Date:

SHEET No. E-2 OF 17 SHEETS

ADD. 52

ORIGINAL PLAN	SURVEY PLOTTED BY	DATE
	DRAWN BY	
	TRACED BY	
NOTE BOOK	DESIGNED BY	
	QUANTITIES BY	
No.	CHECKED BY	

FED. ROAD DIST. NO.	STATE	FED. AID PROJ. NO.	FISCAL YEAR	SHEET NO.	TOTAL SHEETS
HAWAII	HAW.	I-HI-1(75):8 I-HI-1(14):8	1969	C.O. ADD. 52 S-1	181

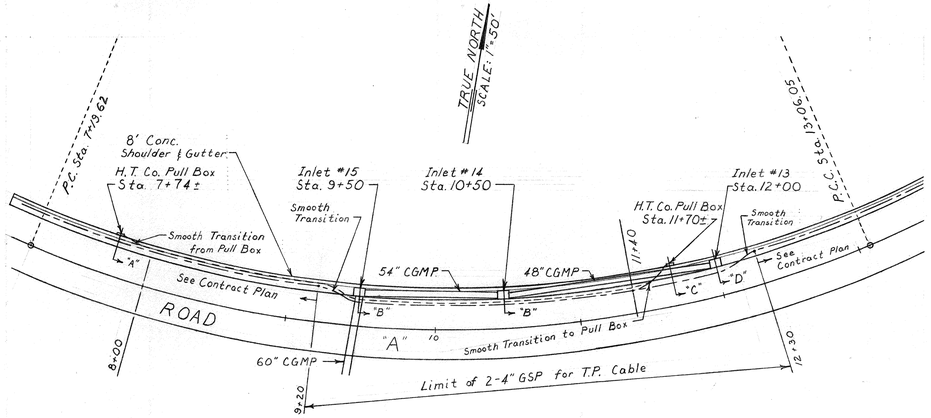

PLAN

CONTRACT CHANGE ORDER #8
TELEPHONE REVISIONS
ALONG ROAD "A"
F.A.I.P. No. I-HI-1(75):8
Date: 9/8/70

LEGEND
——— T.P. Cable
- - - - - 2-4" Conduits Encased in Concrete

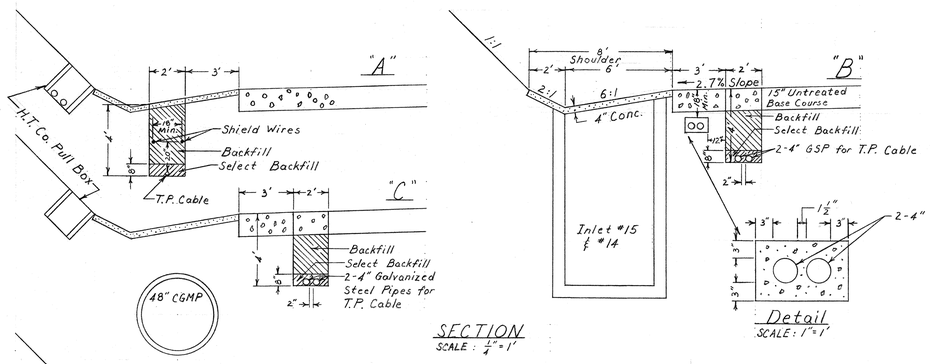

SECTION
SCALE: 1/4"=1'

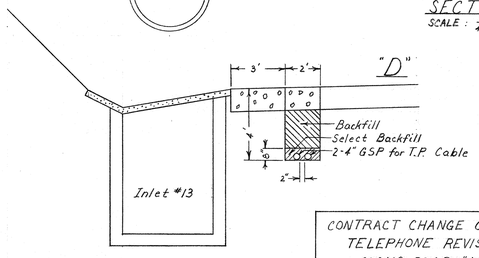

Notes:
1- Excavation and backfill of 2-4" GSP for T.P. Cable shall be incidental to Item No. 120.3571.
2- Cushion material 3" below invert grade shall be provided for conduits and cables in rocky areas (Refer to Section 120 of the Special Provisions)
3- For details not shown see Contract Plans.

CONTRACT CHANGE ORDER #8
TELEPHONE REVISIONS
ALONG ROAD "A"
F.A.I.P. No. I-HI-1(75):8
Date: 9/8/70

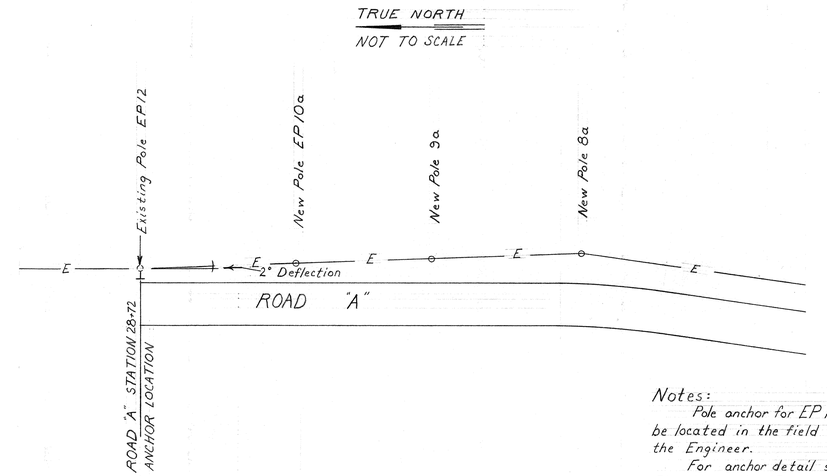

Notes:
Pole anchor for EP12 to be located in the field by the Engineer.
For anchor detail see Plan Sheet No. 55.

CONTRACT CHANGE ORDER #17
ELECTRICAL REVISIONS
ALONG ROAD "A"
F.A.I.P. No. I-HI-1(14):8
Date: March 1971

ORIGINAL PLAN	SURVEY PLOTTED BY	DATE
	DRAWN BY	"
	TRACED BY	"
NOTE BOOK	DESIGNED BY	"
	QUANTITIES BY	"
No.	CHECKED BY	"

STATE OF HAWAII
DEPARTMENT OF TRANSPORTATION
HIGHWAYS DIVISION

CONTRACT CHANGE ORDERS
#8 & #17

F.A.I.P. No. I-HI-1(75):8
F.A.I.P. No. I-HI-1(14):8

SCALE: AS SHOWN

SHEET No. OF SHEETS

C.O. ADD. 52 S-1

K+E TRACING PAPER

FED. ROAD DIST. NO.	STATE	FED. AID PROJ. NO.	FISCAL YEAR	SHEET NO.	TOTAL SHEETS
HAWAII	HAW.	I-H1-1(78)8	1969	53	181

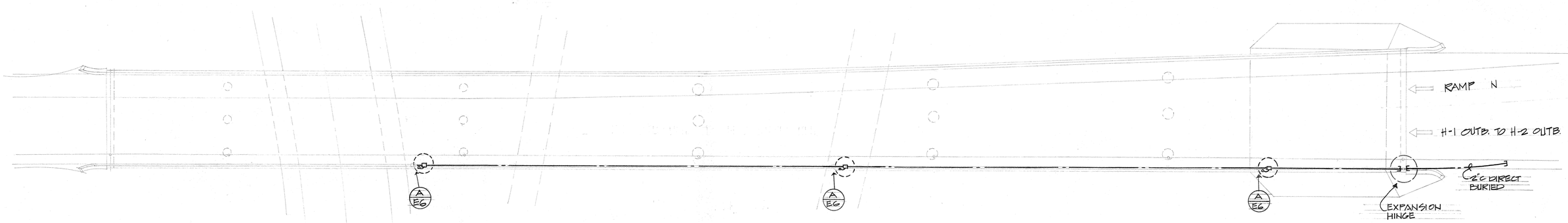

RACEWAY PLAN - STRUCTURE NO. 13
SCALE: 1" = 20'-0"

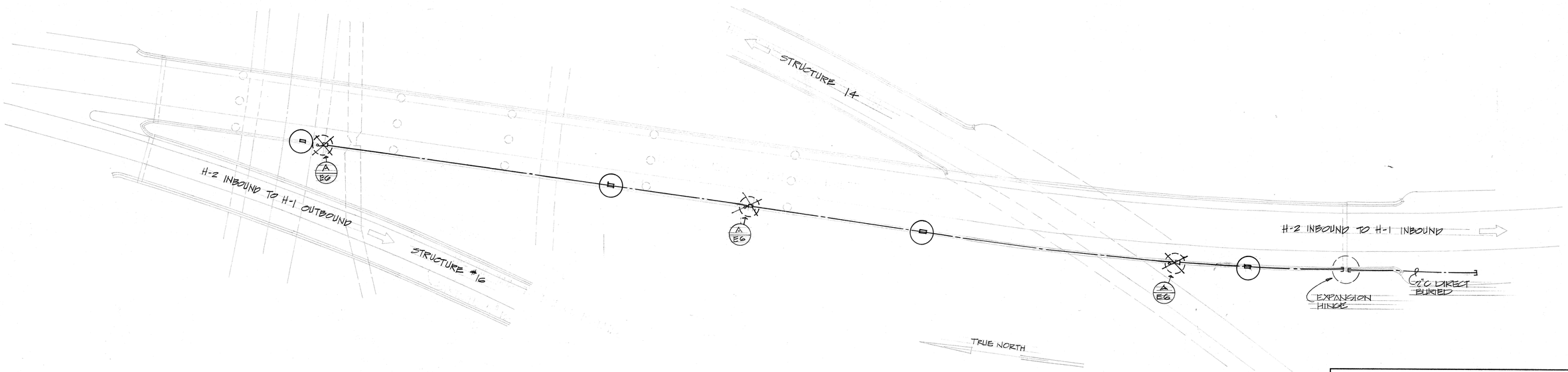

RACEWAY PLAN - STRUCTURE NO. 15
SCALE: 1" = 20'-0"

ORIGINAL PLAN	SURVEY PLOTTED BY	DATE
	DRAWN BY	"
	TRACED BY	"
NOTE BOOK	DESIGNED BY	"
	QUANTITIES BY	"
No.	CHECKED BY	"

DONALD T. K. HO
REGISTERED PROFESSIONAL ENGINEER
No. 1010
HAWAII, U.S.A.

THIS WORK WAS PREPARED BY ME OR UNDER MY SUPERVISION.

STATE OF HAWAII
DEPARTMENT OF TRANSPORTATION
HIGHWAYS DIVISION

WAIAWA INTERCHANGE

STRUCTURES No. 13 & 15
ELECTRICAL RACEWAY PLAN

F.A.I. Proj. No. I-H1-1(75):8

Scales: As shown Date:

SHEET No. E-3 OF 17 SHEETS

FED. ROAD DIST. NO.	STATE	FED. AID PROJ. NO.	FISCAL YEAR	SHEET NO.	TOTAL SHEETS
HAWAII	HAW.	I-HI-1(75)-8	1972	54	181

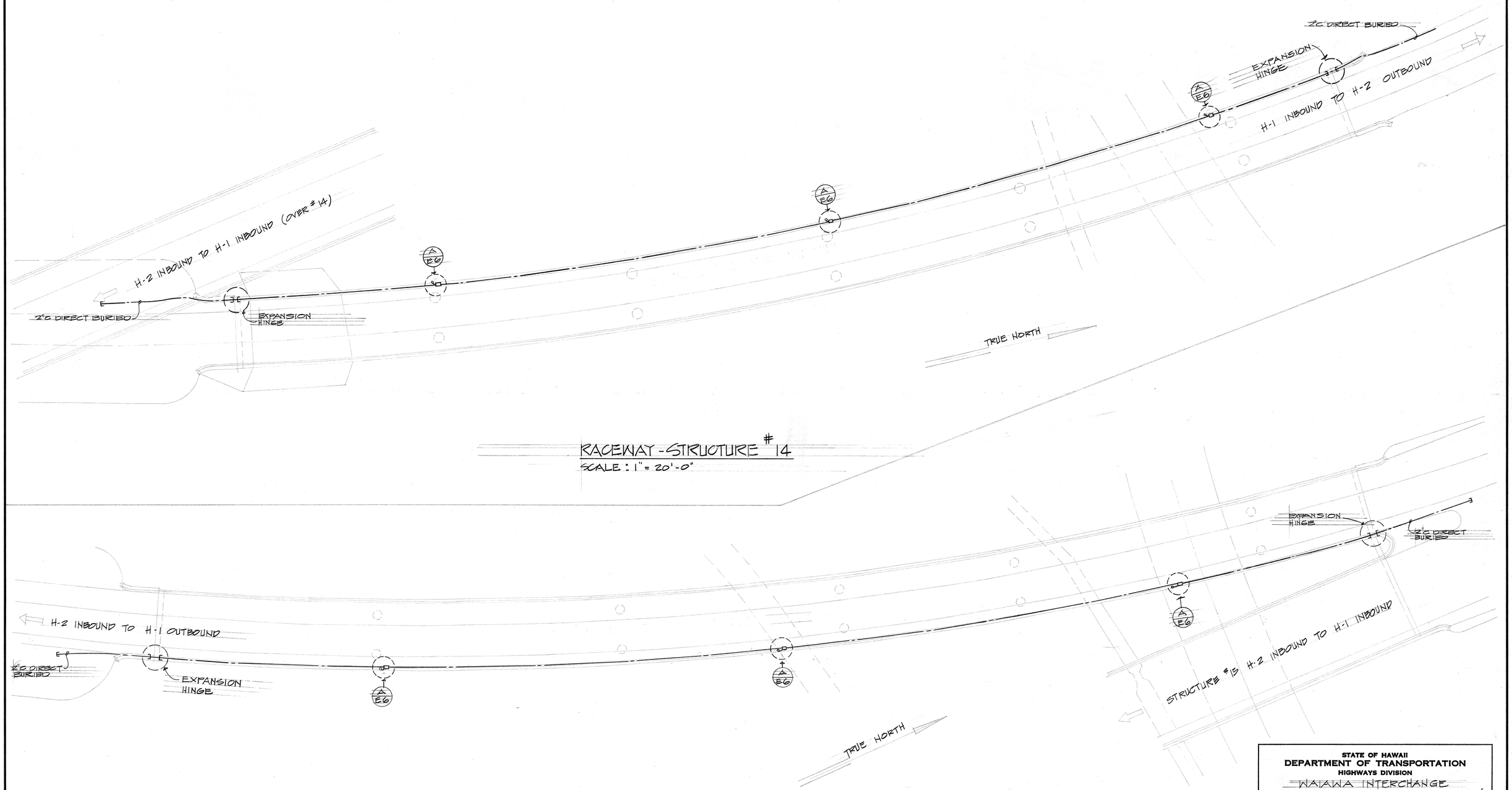

RACEWAY - STRUCTURE # 14
SCALE : 1" = 20'-0"

RACEWAY PLAN - STRUCTURE # 16
SCALE : 1" = 20'-0"

ORIGINAL PLAN	SURVEY PLOTTED BY	DATE
	DRAWN BY	
	TRACED BY	
NOTE BOOK	DESIGNED BY	
	QUANTITIES BY	
No.	CHECKED BY	

DONALD T. K. HO
REGISTERED PROFESSIONAL ENGINEER
No. 1010
HAWAII, U.S.A.

THIS WORK WAS PREPARED BY ME OR UNDER MY SUPERVISION.

STATE OF HAWAII
DEPARTMENT OF TRANSPORTATION
HIGHWAYS DIVISION

WAIAWA INTERCHANGE

STRUCTURES No. 14 & 16
ELECTRICAL RACEWAY PLAN

F.A.I. Proj. No. I-HI-1(75):8

Scales: As Shown date:

SHEET No. E-4 OF 17 SHEETS

FED. ROAD DIST. NO.	STATE	FED. AID PROJ. NO.	FISCAL YEAR	SHEET NO.	TOTAL SHEETS
HAWAII	HAW.	I-H1-1(79)8	1969	55	181

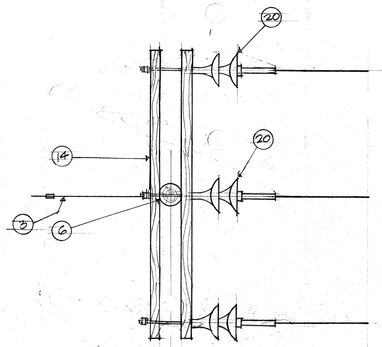

PLAN

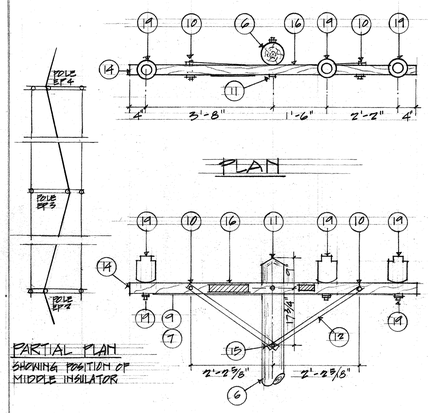

PLAN

ELEVATION

(P2) SINGLE ARM THRU CONDITION

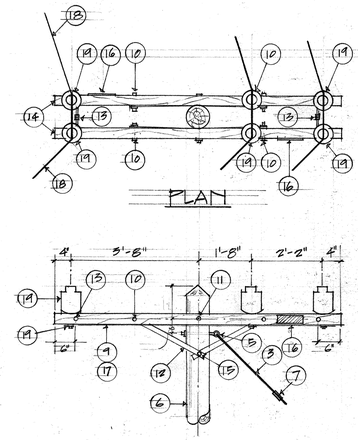

PLAN

ELEVATION

(P3) ANGLE CONSTRUCTION

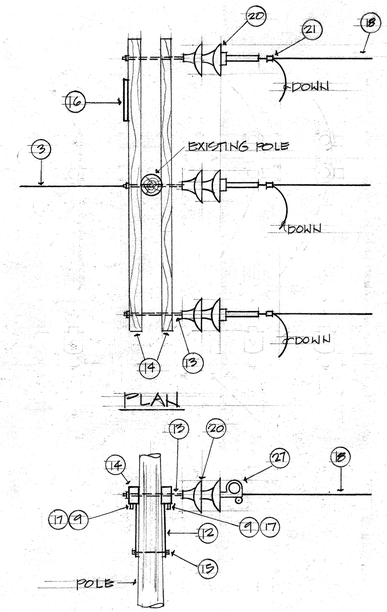

PLAN

ELEVATION

(P4) DEADEND CONDITION

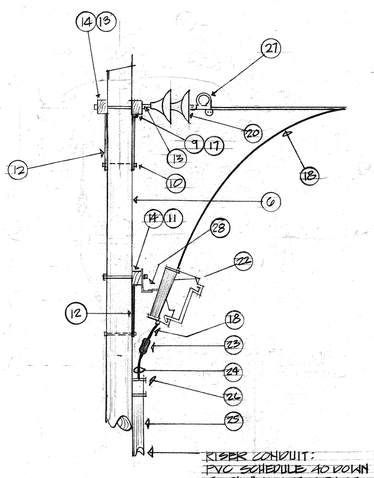

PROFILE

(P1) DETAIL - RISER POLE FOR PRIMARY CABLE

NOT TO SCALE

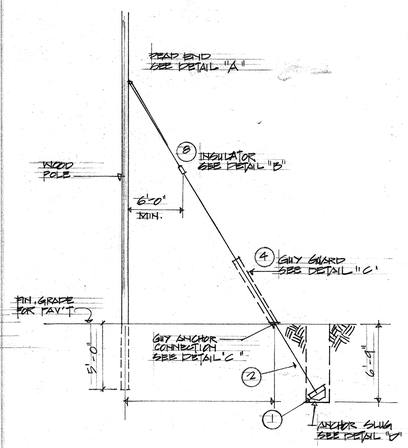

ELEVATION

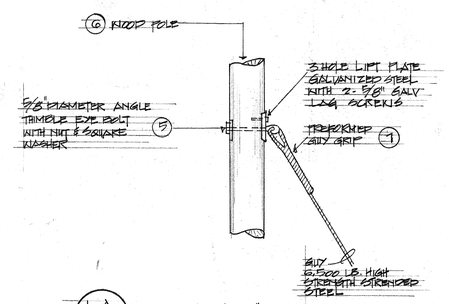

(1-A / E5) DETAIL "A"

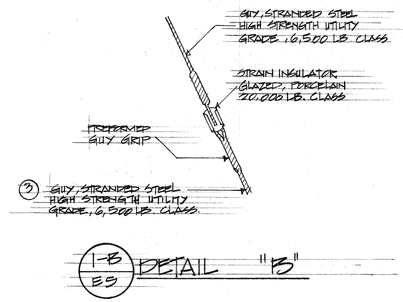

(1-B / E5) DETAIL "B"

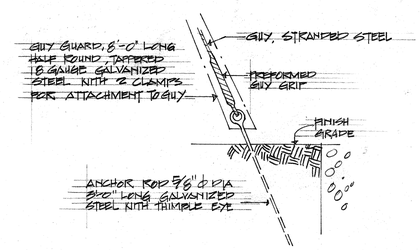

(1-C / E5) DETAIL "C"

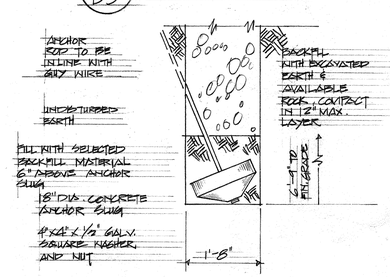

(1-D / E5) DETAIL "D"

(1 / E5) ANCHOR AND GUYING DETAILS

NOT TO SCALE

MATERIAL LIST - OVERHEAD SYSTEM

POLE AND ANCHOR GROUP (SEE SPECIFICATION)

1. ANCHOR SLUG, CONCRETE, 18" DIAMETER
2. ANCHOR ROD, 1" x 8'-0" TRIPLE EYE WITH WASHER & NUT
3. GUY STRAND, 3/8" DIAMETER
4. GUY GUARD, 8'-0" LONG, STEEL
5. GUY EYE BOLT, 5/8" DIAMETER
6. POLE, CREOSOTE, ASA CLASS 3
7. PREFORMED STRAND GRIPS
8. STRAIN INSULATOR, 20,000 LB. STRENGTH
9. BONDING WIRE, #6 SDEC & STABLES
10. CROSSARM BRACE BOLT, MACHINE, 5/8" DIAMETER, WASHER & NUT
11. CROSSARM BOLT, 5/8" DIAMETER, WASHER & NUT
12. CROSSARM BRACE, 1/4" x 1 1/4" x 34"
13. DOUBLE ARMING BOLT, 5/8" DIAMETER, WASHER & NUT
14. CROSSARM 3 1/4" x 4 1/2" x 8'-0"
15. LAG SCREW, 1/2" DIAMETER
16. SIGN, HIGH VOLTAGE WITH FLATHEAD NAILS
17. WOOD MOLDING, 1/2" WIRING WITH 2-HOLE STRAP & NAILS
18. CONDUCTOR, PRIMARY, 12,000 VOLTS, NO. 1/0 MH DEC
19. INSULATOR, 15 KV, POST TYPE WITH STEEL PINS
20. INSULATOR, 15 KV, CLEVIS DEADEND W/ 5/8" MOUNTING BOLT, WASHER & NUT
21. LINE CONNECTOR
22. FUSED CUTOUT, 15 KV, 100 A
23. STRESS RELIEF CONE, PREMOLDED, 15 KV
24. PRIMARY CABLE, 3/C #350 MCM, PEI, 15 KV
25. RISER CONDUIT, 4" PVC SCHEDULE 40
26. SEALING COMPOUND
27. UNIVERSAL STRAIN CLAMP
28. CUTOUT MOUNTING BRACKET

ORIGINAL PLAN	SURVEY PLOTTED BY	DATE
	TRACED BY	
NOTE BOOK	DESIGNED BY	
No.	QUANTITIES BY	
	CHECKED BY	

DONALD T. K. HO
REGISTERED PROFESSIONAL ENGINEER
No. 1010
HAWAII, U.S.A.

THIS WORK WAS PREPARED BY ME OR UNDER MY SUPERVISION.

STATE OF HAWAII
DEPARTMENT OF TRANSPORTATION
HIGHWAYS DIVISION

WAIAWA INTERCHANGE

POLE FRAMING DETAILS

F.A.I. Proj. No. I-HI-1(79) 8

Scales: As shown date:

SHEET No. E5 OF 17 SHEETS

FED. ROAD DIST. NO.	STATE	FED. AID PROJ. NO.	FISCAL YEAR	SHEET NO.	TOTAL SHEETS
HAWAII	HAW.	F-HI-1(75)B	1969	56	181

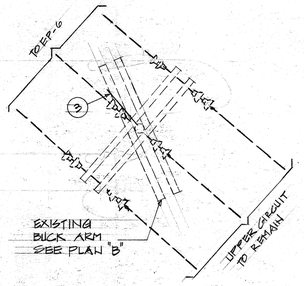

PLAN "A" - EXISTING DOUBLE DEADEND ON TOP LEVEL

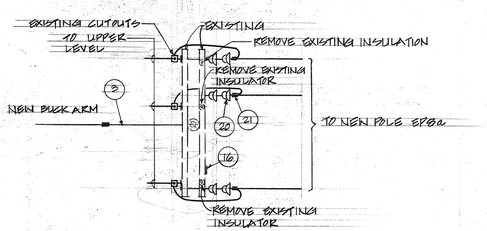

PLAN "B" EXISTING BUCK ARM - MIDDLE LEVEL.

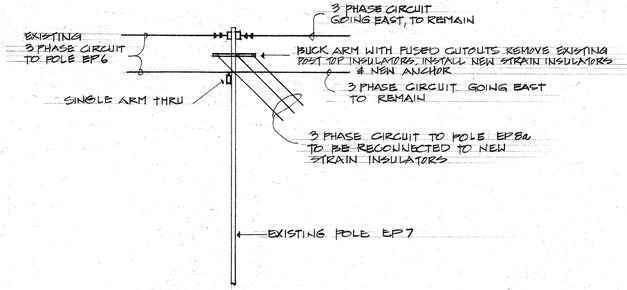

SIDE ELEVATION

P5 DETAIL - FRAMING POLE EP7

NOT TO SCALE

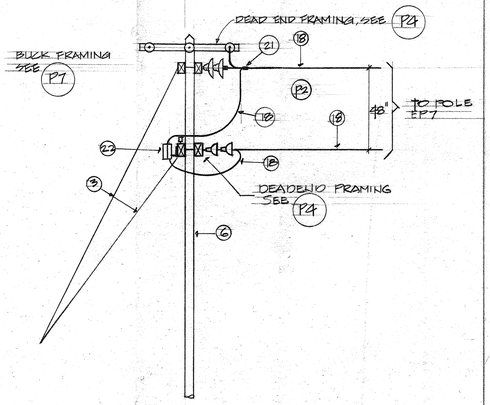

P6 DETAIL - POLE EP5b FRAMING

NOT TO SCALE

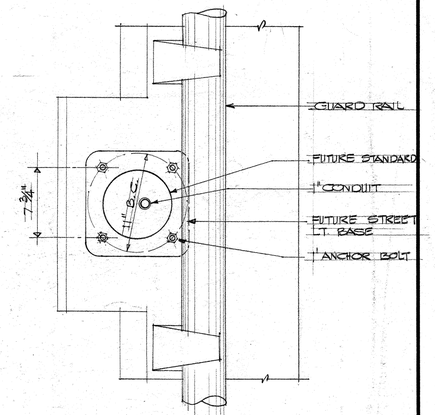

PLAN

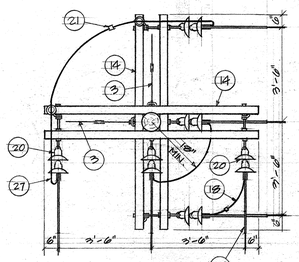

PLAN

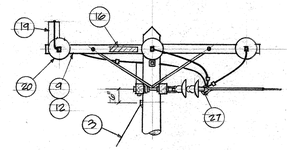

ELEVATION

P7 BUCK ARM CONDITION

NOT TO SCALE

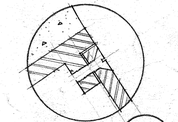

DETAIL D E-6

N.T.S.

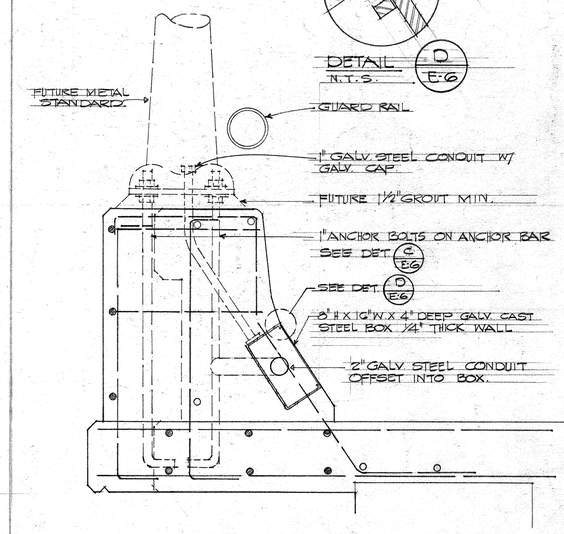

SECTION

A E-6 TYPICAL LIGHT BASE DETAIL

SCALE: 1 1/2" = 1'-0"

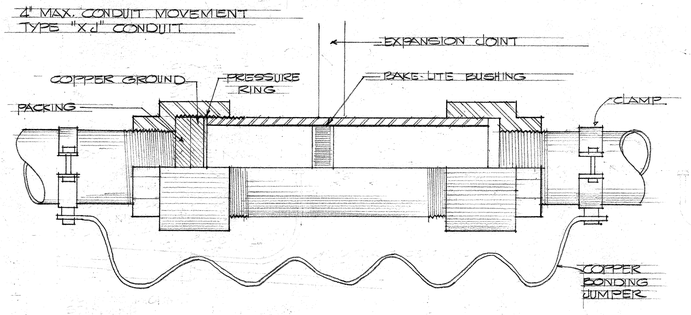

B E-6 EXPANSION FITTING DETAIL

N.T.S.

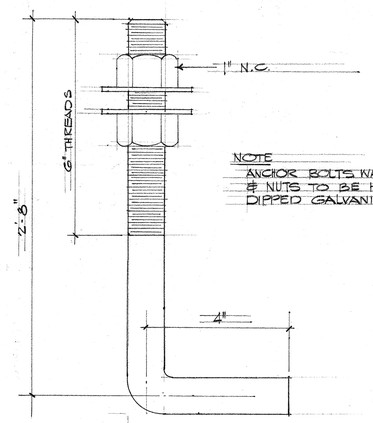

NOTE
ANCHOR BOLTS, WASHERS & NUTS TO BE HOT DIPPED GALVANIZED.

C E-6 ANCHOR BOLT DETAIL

SCALE: 1/2" = 1"

SURVEY PLOTTED BY	DATE
DRAWN BY	
TRACED BY	
DESIGNED BY	
QUANTITIES BY	
CHECKED BY	

ORIGINAL PLAN	
NOTE BOOK	
No.	

DONALD T. K. HO REGISTERED PROFESSIONAL ENGINEER No. 1010 HAWAII, U.S.A.

THIS WORK WAS PREPARED BY ME OR UNDER MY SUPERVISION.

STATE OF HAWAII
DEPARTMENT OF TRANSPORTATION
HIGHWAYS DIVISION

WAIAWA INTERCHANGE

POLE FRAMING DETAILS & HIGHWAY LIGHTING DETAILS

F.A. I Proj. No. I-HI-1 (75):B

Scales: As shown Date:

SHEET No. E-6 OF 17 SHEETS

56

FED. ROAD DIST. NO.	STATE	FED. AID PROJ. NO.	FISCAL YEAR	SHEET NO.	TOTAL SHEETS
HAWAII	HAW.	I-HI-1(75):8	1969	57	181

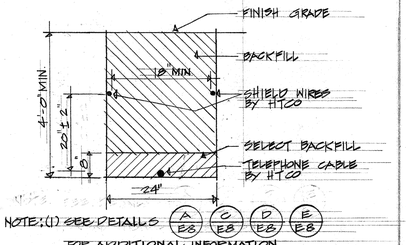

A

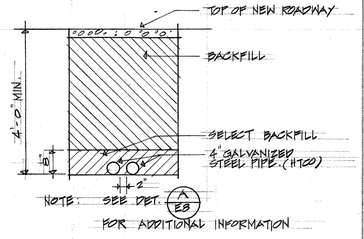

B

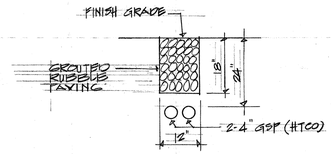

C

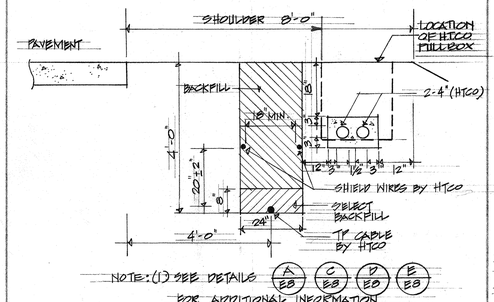

D

GENERAL NOTES:

1. CONDUITS FOR HTCO. SHALL BE FURNISHED BY HTCO, INSTALLED BY CONTRACTOR.
2. CONDUITS FOR HECO. SHALL BE FURNISHED BY HECO, INSTALLED BY CONTRACTOR.
3. CONDUITS FOR OAHU SUGAR (OS.CO.) SHALL BE FURNISHED & INSTALLED BY CONTRACTOR.
4. GROUTED RUBBLE PAVING SHALL BE ACCORDING TO SPECIFICATION
5. CONCRETE FOR DUCTLINE SHALL BE 2500 PSI STRENGTH IN 28 DAYS.
6. SEE SPECIFICATION OF SELECT BACKFILL OVER DIRECT BURIED CABLES AND DIRECT BURIED CONDUITS, AND BACKFILL OVER CONCRETE ENCASED DUCTS AND SELECT BACKFILL.

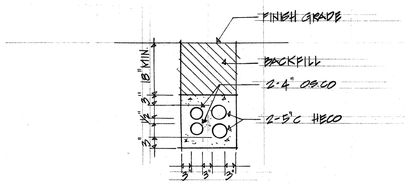

E

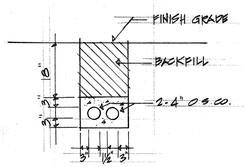

F

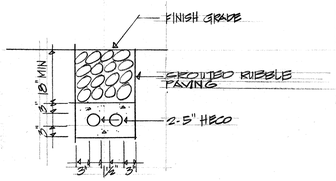

G

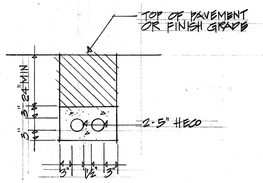

H

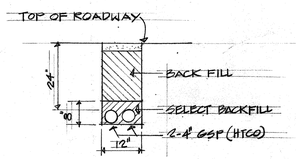

I

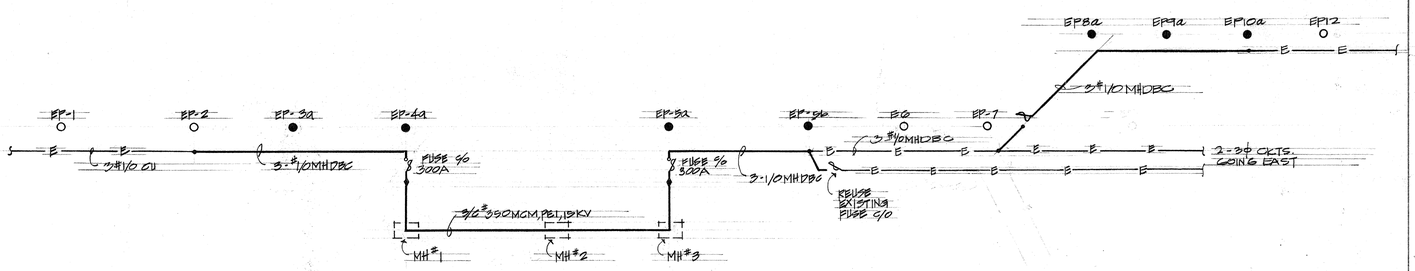

ONE LINE DIAGRAM - OAHU SUGAR CO. 11KV LINE RECONNECTION

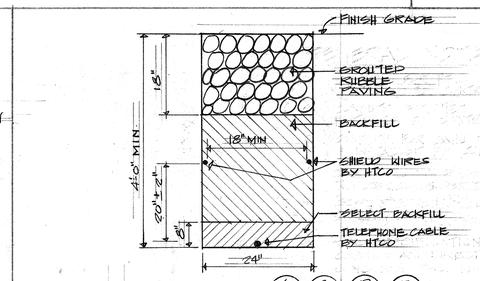

J

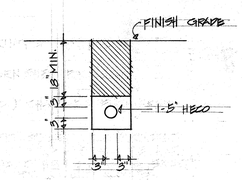

K

APPROVED BY	DATE
John W. Judd, OAHU SUGAR CO.	6/27/69
HAWAIIAN ELECTRIC CO. RH JK	7-29-69
HAWAIIAN TELEPHONE CO	6-25-69

DONALD T. K. HO REGISTERED PROFESSIONAL ENGINEER No. 1010 HAWAII, U.S.A.

THIS WORK WAS PREPARED BY ME OR UNDER MY SUPERVISION.

STATE OF HAWAII
DEPARTMENT OF TRANSPORTATION
HIGHWAYS DIVISION
WAIAWA INTERCHANGE

DUCT SECTIONS & ONE LINE DIAGRAM, 11KV RECONNECTION

F.A. I Proj No. I-HI-1(75):8

Scales: AS Shown

SHEET No. E-7 OF 17 SHEETS

ORIGINAL PLAT	SURVEY PLOTTED BY	DATE
	TRACING BY	"
	TRACED BY	"
NOTE BOOK	DESIGNED BY	"
	QUANTITIES BY	"
No.	CHECKED BY	"

K+E CRYSTALENE® LA 2920 TRACING PAPER

FED. ROAD DIST. NO.	STATE	FED. AID PROJ. NO.	FISCAL YEAR	SHEET NO.	TOTAL SHEETS
HAWAII	HAW.	I-HI-1(19)8	1969	58	181

NOTES:

1. 4" GALVANIZED STEEL PIPES SHALL BE PLACED ACROSS ROADWAY (ROAD "A") AND AT SUCH DEPTHS FROM FINISHED GRADES AS INDICATES.
2. BOTH ENDS OF EACH LENGTH OF PIPE SHALL BE REAMED BEFORE JOINING TO INSURE NO BURRS OR SHARP EDGES EXIST.
3. WHERE IT IS NECESSARY TO CUT AND JOIN PIPE EITHER THREADED OR WELDED CONNECTION MAY BE EMPLOYED.
4. WHERE PIPE IS JOINED BY WELDING, A 4-6 INCH SNUG FITTING LENGHT OF STEEL SLEEVING SHALL BE CENTERED OVER THE BUTT ENDS. THE BUTT ENDS OF THE PIPE SHALL BE TRUE AND PLACED FLUSH TOGETHER. THE WELD SHALL BE MADE AT THE JUNCTION OF THE SLEEVE END AND PIPE. IN NO CASE SHALL AN ATTEMPT BE MADE TO WELD THE BUTT ENDS OF THE PIPE TOGETHER.
5. WELDED JOINTS AND OTHER AREAS ON THE PIPE WHERE GALVANIZING HAS BEEN DAMAGED SHALL BE COVERED WITH TWO HALF LAP LAYERS OF TAPECOAT OR EQUAL.
6. CHANGE IN GRADE SHALL BE GRADUAL AND BENDS SHALL HAVE A RADIUS OF NOT LESS THAN 4 FEET, PREFERRABLY MORE.
7. SPLICE PITS WILL BE DUG AT SPLICE LOCATIONS 1 AND 2. THE MINIMUM SIZE OF SPLICE PIT SHALL BE 7'-0" IN LENGHT, 6'-0" IN WIDTH AND TO A DEPTH 1'-0" BELOW EXISTING TELEPHONE CABLE. WHERE NECESSARY, ADEQUATE SHORING SHALL BE PROVIDED TO INSURE SAFE WORKING CONDITIONS FOR THE SPLICING CREWS.
8. BACKFILLING OF THE PIPE SECTIONS SHALL BE AT THE DIRECTION OF H.T.CO. AND STATE INSPECTORS. BACKFILL IN GENERAL SHALL CONSIST OF THE EARTH REMOVED FROM TRENCH. IT SHALL NOT INCLUDE LOGS, STUMPS, TIN CANS, OR OTHER DEBRIS. WHERE ROCK IS REMOVED FROM THE TRENCH, SPECIAL CARE SHALL BE EXERCIZED IN BACKFILLING.
9. THE TRENCH AND SPLICE PIT SHALL BE THOROUGHLY COMPACTED FROM BOTTOM TO TOP AND SHALL MEET THE STANDARD SPECIFICATIONS OF THE STATE OF HAWAII, HIGHWAYS DIVISION.
10. TAMPING OF BACKFILL MATERIALS SHALL BE DONE IN SUCH MANNER THAT WILL NOT CAUSE ANY DAMAGE TO TELEPHONE CABLE AND FOREIGN UTILITIES.
11. CAP AND MARK BOTH ENDS OF VACANT 4" GSP CROSSING ROAD "A".
12. IF NECESSARY CONTRACTOR WILL BE RESPONSIBLE FOR SUSPENDING H.T.CO. LAND LINE CABLE PENDING COMPLETION OF PERMANENT REROUTE. CONTRACTOR TO FURNISH AND PLACE SCHEDULE 40 PVC SPLIT DUCT AROUND EXPOSED PORTION OF CABLE TO AVOID ANY POSSIBLE DAMAGE. THIS WORK WHEN REQUIRED SHALL BE DONE AT CONTRACTORS EXPENSE AND AT NO ADDITIONAL COMPENSATION.

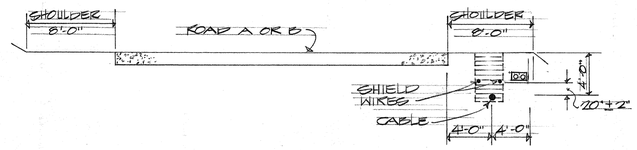

A / E-8 TYPICAL LOCATION OF TELEPHONE TP CABLE TRENCH OR CONDUITS

NOT TO SCALE

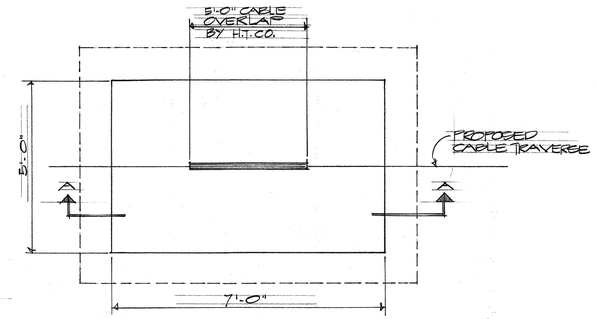

PLAN

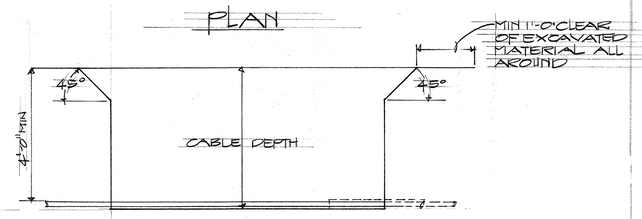

SECTION

B / E-8 TYPICAL SPLICING PITS FOR BURIED CABLE

NOT TO SCALE

NOTES:

1. THE CONTRACTOR SHALL DIG PITS AT SPECIFIED LOCATIONS.
2. ONE FACE OF PIT SHALL BE KEPT FREE OF EXCAVATED MATERIAL.
3. WHERE PITS ARE LOCATED ON SLOPING OR IRREGULAR GROUND THE EXCAVATED MATERIAL SHALL BE PLACED IN SUCH A MANNER AS TO PREVENT SURFACE WATER FROM DRAINING INTO THE PIT.

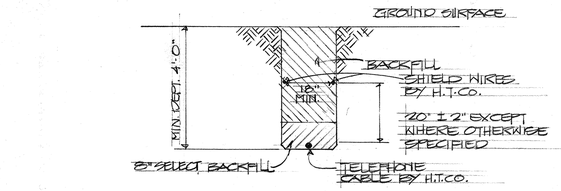

C / E-8 TYPICAL SECTION THROUGH NORMAL TRENCH

NOT TO SCALE

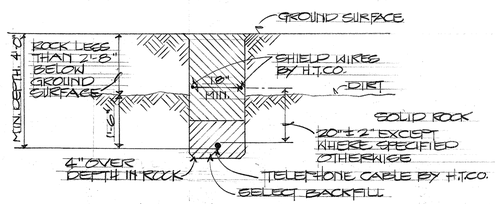

D / E-8 TYPICAL SECTION THROUGH TRENCH WITH ROCK LESS THAN 2'-6" BELOW SURFACE

NOT TO SCALE

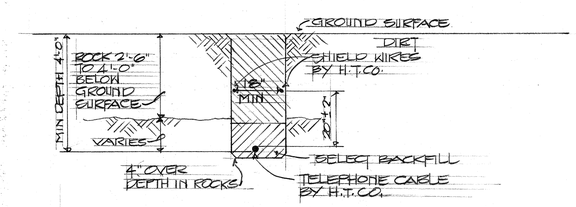

E / E-8 TYPICAL SECTION THROUGH TRENCH WITH ROCK 2'-6" TO 4'-0" BELOW SURFACE

NOT TO SCALE

ORIGINAL PLAN		
	SURVEY PLOTTED BY	DATE
	SURVEY TAKEN BY	" "
	TRACED BY	" "
NOTE BOOK	DESIGNED BY	" "
	QUANTITIES BY	" "
No.	CHECKED BY	" "

DONALD T. K. HO REGISTERED PROFESSIONAL ENGINEER No. 1010 HAWAII, U.S.A.

APPROVED BY:

HAWAIIAN TELEPHONE CO. — 6-25-69 DATE

STATE OF HAWAII
DEPARTMENT OF TRANSPORTATION
HIGHWAYS DIVISION

WAIAWA INTERCHANGE

TELEPHONE DETAILS

F.A.I. Proj. No. I-HI-1(75):8

Scales: AS Shown Date:

SHEET No. E8 OF 17 SHEETS

FED. ROAD DIST. NO.	STATE	FED. AID PROJ. NO.	FISCAL YEAR	SHEET NO.	TOTAL SHEETS
HAWAII	HAW.	I-HI-1(75):8	1969	59	181

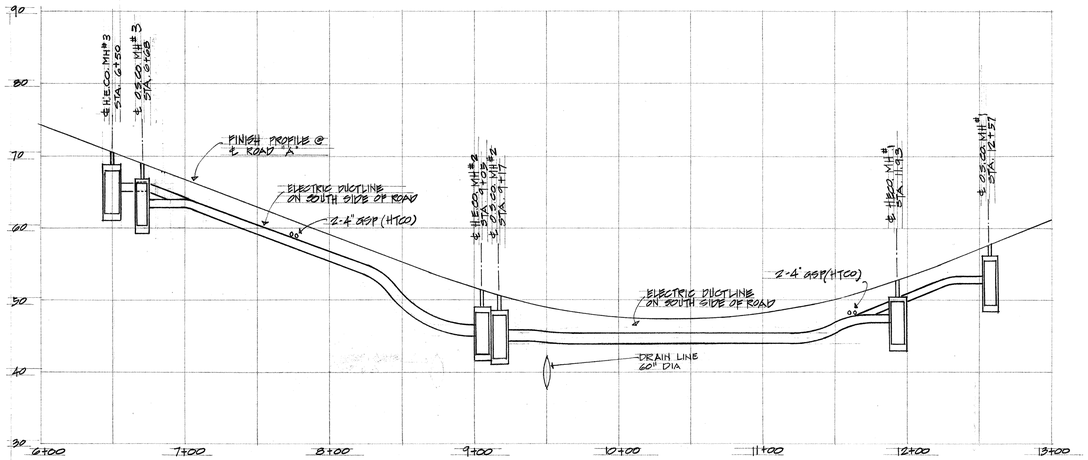

PROFILE-ELECTRICAL DUCTLINE ON SOUTH SIDE OF CANE HAULING ROAD "A" STATION 6+00 TO 13+00

SCALE: HOR. 1" = 50'
VERT. 1" = 10'

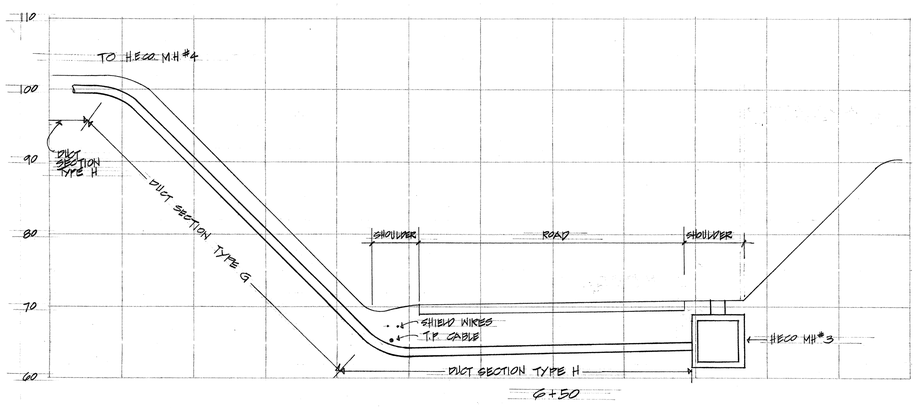

PROFILE - ROAD CROSSING AT STATION 6+50 CANE HAULING ROAD "A"

SCALE: 1" = 10'

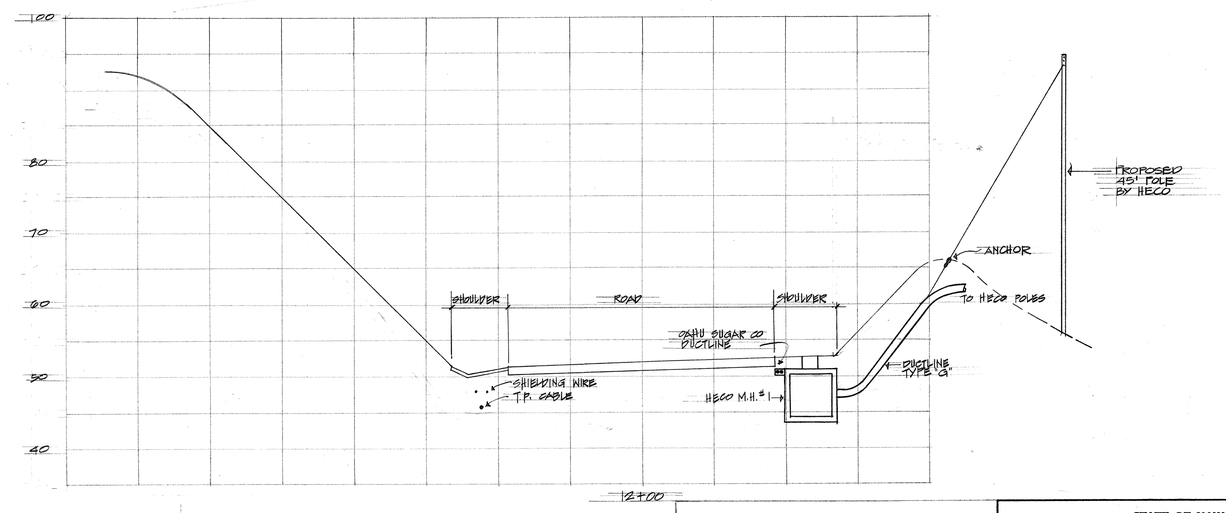

PROFILE - ROAD CROSSING AT STATION 12+00 CANE HAULING ROAD

SCALE: 1" = 10'

THIS WORK WAS PREPARED BY ME OR UNDER MY SUPERVISION.

DONALD T. K. FO REGISTERED PROFESSIONAL ENGINEER No. 1010 HAWAII, U.S.A.

APPROVED BY:

6-23-69
HAWAIIAN TELEPHONE CO DATE

7-29-69
HAWAIIAN ELECTRIC CO DATE

RN JK

STATE OF HAWAII
DEPARTMENT OF TRANSPORTATION
HIGHWAYS DIVISION

WAIAWA INTERCHANGE

DUCTLINE PROFILES

F.A.I. Proj. No I-HI-1 (75): 8

Scales: AS SHOWN Date:

SHEET No. E-9 OF 17 SHEETS

ORIGINAL PLAN		DATE
	SURVEY PLOTTED BY	
	DRAWN BY	
	TRACED BY	"
	DESIGNED BY	"
NOTE BOOK	QUANTITIES BY	"
No.	CHECKED BY	"

K+E CRYSTALENE® LA 2920 TRACING PAPER

FED. ROAD DIST. NO.	STATE	FED. AID PROJ. NO.	FISCAL YEAR	SHEET NO.	TOTAL SHEETS
HAWAII	HAW.	I-H1-1(79)2	1969	60	181

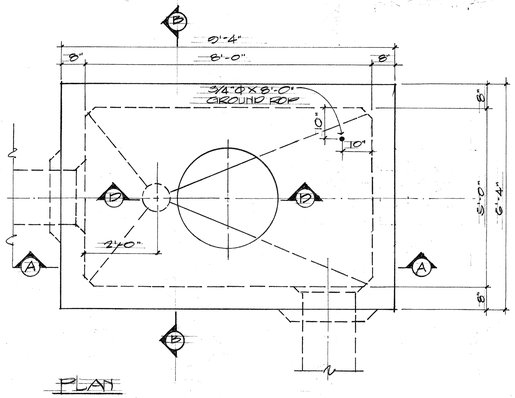

PLAN
SCALE: 1/2" = 1'-0"

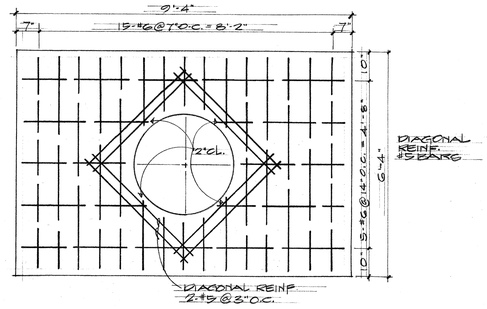

ROOF SLAB REINF PLAN
SCALE: 1/2" = 1'-0"

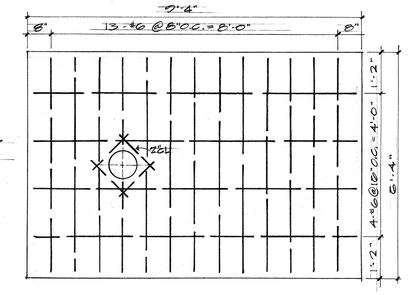

FLOOR SLAB REINF. PLAN
SCALE: 1/2" = 1'-0"

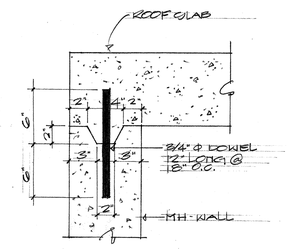

DETAIL "A"
TOP CONSTR. JOINT
OPTIONAL FOR CAST-IN-PLACE CONSTR.
REQUIRED FOR PRECAST CONSTR.
SCALE: 1 1/2" = 1'-0"

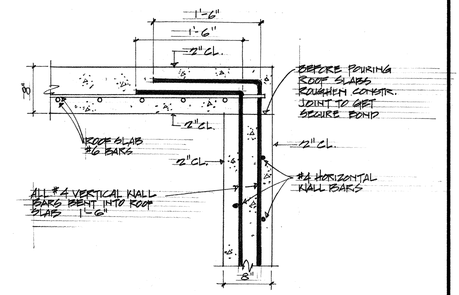

CONSTR. JOINT DETAIL "B"
USE FOR CAST-IN-PLACE CONSTR.
SCALE: 1" = 1'-0"

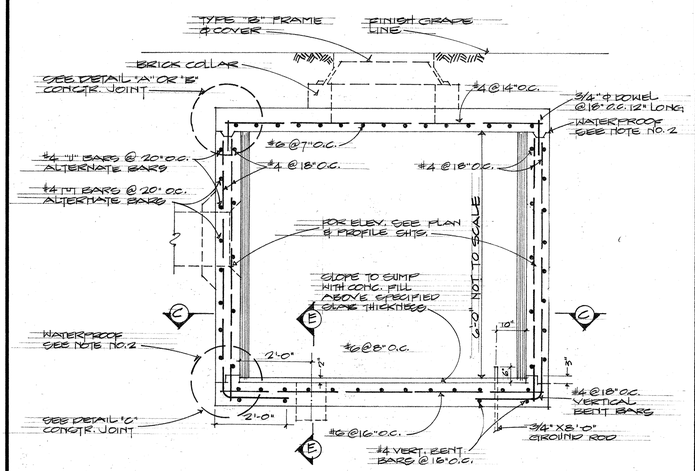

SECTION "A-A"
SCALE: 1/2" = 1'-0"

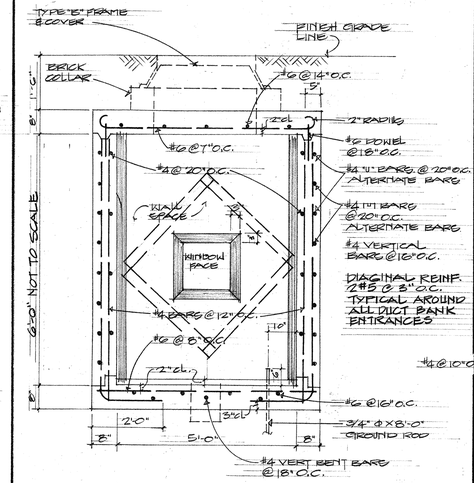

SECTION "B-B"
SCALE: 1/2" = 1'-0"

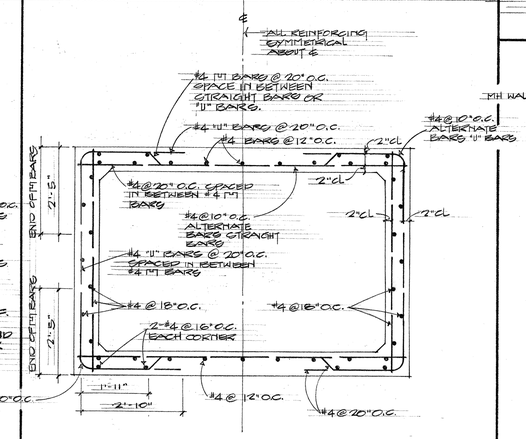

SECTION "C-C"
SCALE: 1/2" = 1'-0"

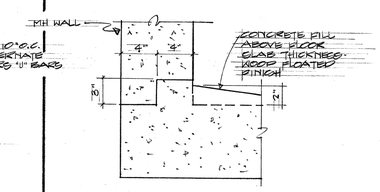

DETAIL "C"
BOTTOM CONSTRICTION JOINT
SCALE: 1 1/2" = 1'-0"

GENERAL NOTES:

1. DESIGN DATA:
   fs = 20000 PSI
   fc = 3000 PSI, fc = 1350 PSI
   n = 10
2. ALL CONSTRICTION JOINTS SHALL BE WATERPROOFED WITH TWO APPLICATIONS OF THORO SEAL OR EQUAL.
3. DUCT WINDOW LOCATIONS TO MATCH INCOMING CONDUIT ELEVATION
4. DUCT WINDOW TO SUIT - SEE PLAN & PROFILE & STANDARD DETAIL SHEETS FOR LOCATION & DETAILS.

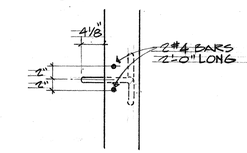

SECTION - PILLING-IN IRON

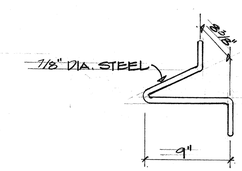

PILLING-IN IRON

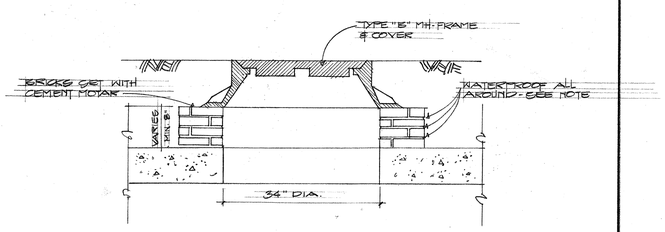

SECTION "D-D"
MH. COVER DETAIL
SCALE: 3/4" = 1'-0"

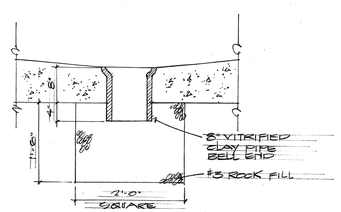

SECTION "E-E"
MH SUMP DETAIL
SCALE: 3/4" = 1'-0"

ORIGINAL PLAN		DATE
	SURVEY PLOTTED BY	"
	DRAWN BY	"
	TRACED BY	"
NOTE BOOK	DESIGNED BY	"
	QUANTITIES BY	"
No.	CHECKED BY	"

DONALD T. K. TO REGISTERED PROFESSIONAL ENGINEER No. 1010 HAWAII, U.S.A.

THIS WORK WAS PREPARED BY ME OR UNDER MY SUPERVISION.

STATE OF HAWAII
DEPARTMENT OF TRANSPORTATION
HIGHWAYS DIVISION

WAIAWA INTERCHANGE

MANHOLE DETAILS

F.A.I. Proj. No. I-HI-1(75):8
Scales: AS Shown

SHEET No. E-10 OF 17 SHEETS

FED. ROAD DIST. NO.	STATE	FED. AID PROJ. NO.	FISCAL YEAR	SHEET NO.	TOTAL SHEETS
HAWAII	HAW.	I-HI-1(75)8	1969	61	181

COVER DESIGNATION

LETTER BLOCKS 2" WIDE x 3" HIGH. LETTERS 1/2" WIDE.
OAHU SUGAR CO.

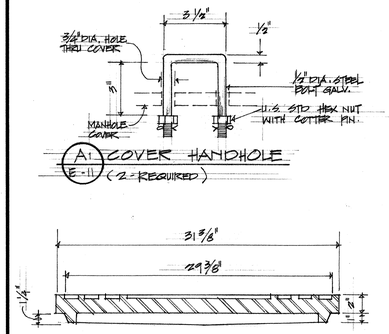

A1 E-11 COVER HANDHOLE (2 - REQUIRED)

COVER SECTION

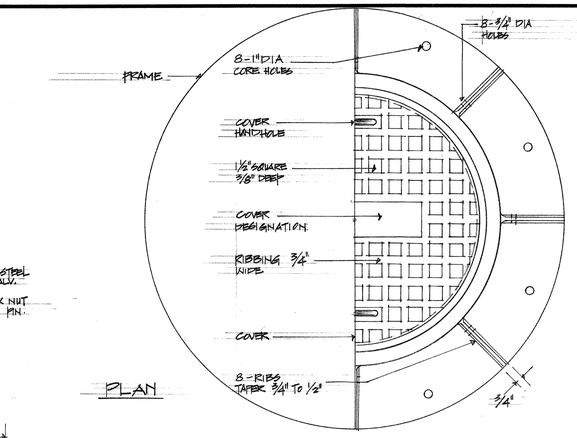

PLAN

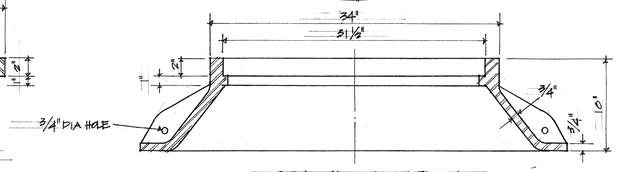

FRAME SECTION

A E-11 28" DIAMETER MANHOLE - FRAME & COVER
NOT TO SCALE

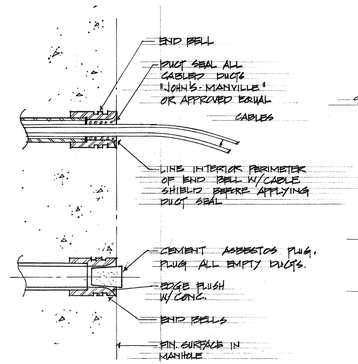

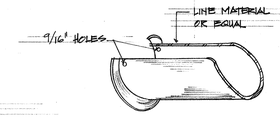

CABLE SHIELD
NOT TO SCALE
REQUIRED AT ALL CABLE ENTRIES AND EXITS

B E-11 DUCT ENTRANCE DETAIL
NOT TO SCALE

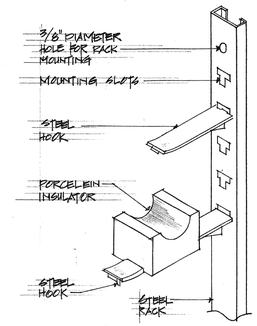

ISOMETRIC

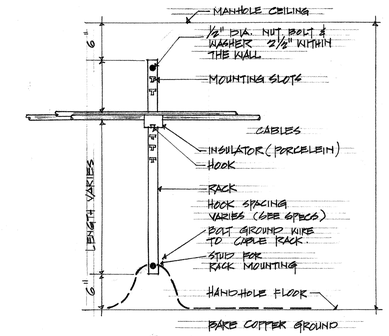

ELEVATION

NOTES:
1. ALL STEEL PARTS SHALL BE HOT DIPPED GALVANIZED AFTER FABRICATION
2. PROVIDE MINIMUM OF 2 CABLE RACKS PER RACKING WALL OF EACH MANHOLE.

C E-11 CABLE RACK IN MANHOLE
NOT TO SCALE

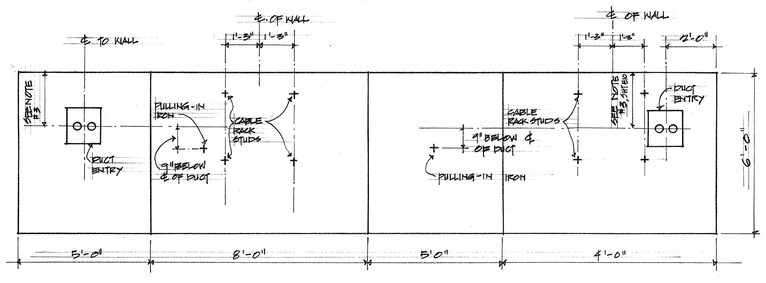

D E-11 WALL ELEVATION OF O.S. Co. MANHOLE #1
NOT TO SCALE

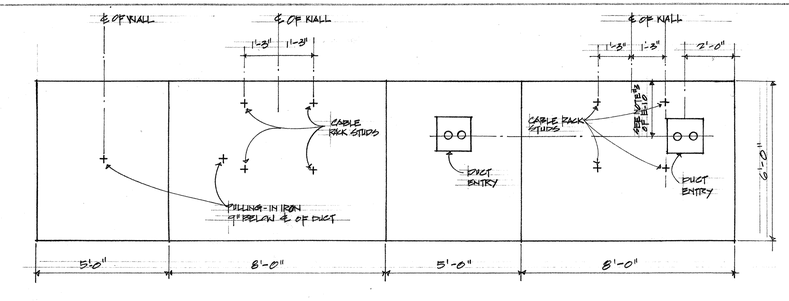

E E-11 WALL ELEVATION OF O.S. Co. MANHOLE #3
NOT TO SCALE

ORIGINAL PLAN		DATE
NOTE BOOK No.	SURVEY PLOTTED BY	
	DRAWN BY	
	TRACED BY	
	DESIGNED BY	
	QUANTITIES BY	
	CHECKED BY	

REGISTERED PROFESSIONAL ENGINEER No. 1010 DONALD T. K. HO HAWAII, U.S.A.

THIS WORK WAS PREPARED BY ME OR UNDER MY SUPERVISION.

STATE OF HAWAII
DEPARTMENT OF TRANSPORTATION
HIGHWAYS DIVISION

WAIAWA INTERCHANGE

MANHOLE DETAILS

F.A.I. Proj No. FHI-1(75):8

SCALES: AS SHOWN

SHEET No. E-11 OF 17 SHEETS

FED. ROAD DIST. NO.	STATE	FED. AID PROJ. NO.	FISCAL YEAR	SHEET NO.	TOTAL SHEETS
HAWAII	HAW.	I-H1-1(75)8	1969	62	181

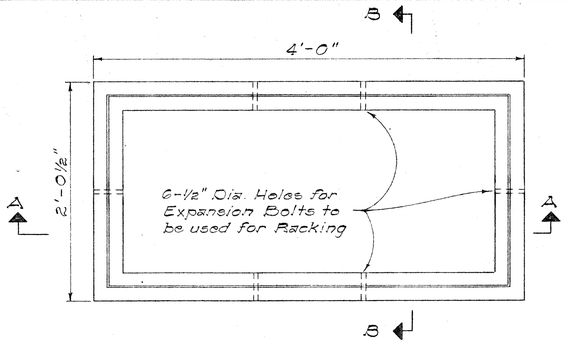

PLAN

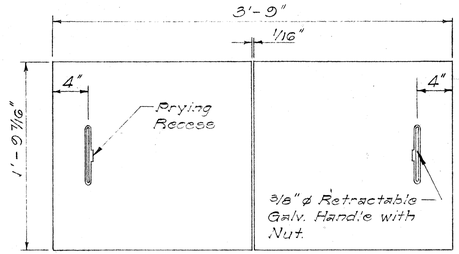

PLAN OF COVER

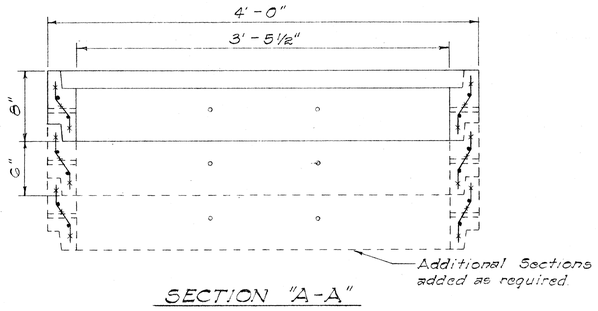

SECTION "A-A"

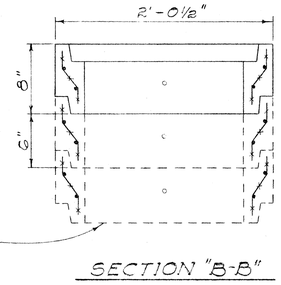

SECTION "B-B"

DETAIL OF LARGE PULL BOX No. 435T-B

Scale: 1½" = 1'-0"

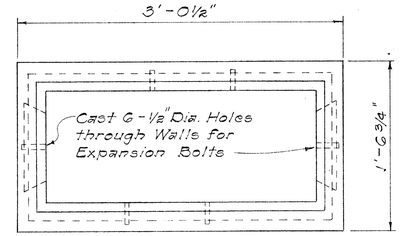

PLAN

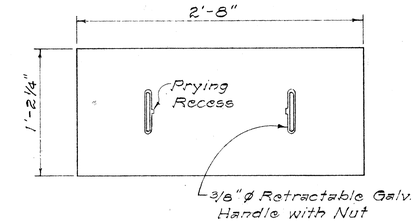

PLAN OF COVER

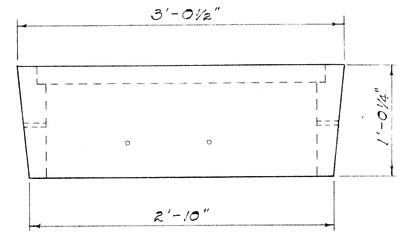

SIDE ELEVATION

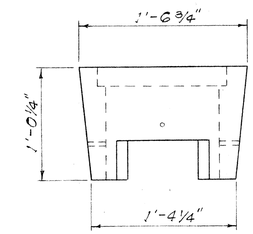

END ELEVATION

DETAIL OF SMALL PULL BOX No. 434T

Scale: 1½" = 1'-0"

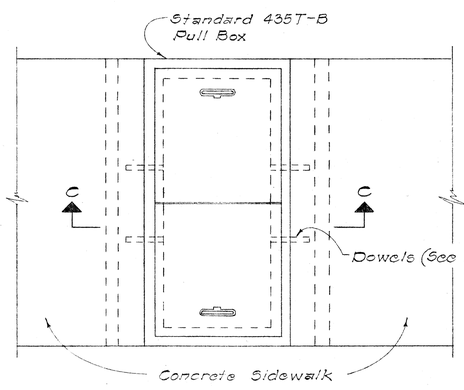

PLAN

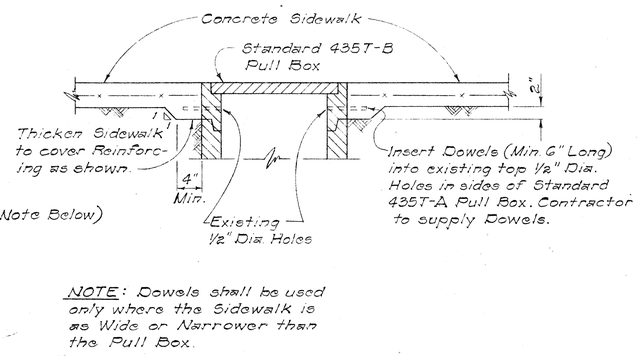

NOTE: Dowels shall be used only where the Sidewalk is as Wide or Narrower than the Pull Box.

SECTION "C-C"

INSTALLATION DETAIL OF PULL BOX No. 435T-B IN SIDEWALK AREAS

Scale: 1" = 1'-0"

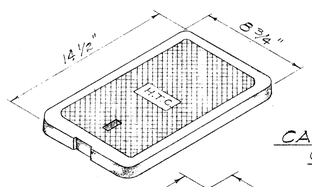

CAST IRON COVER

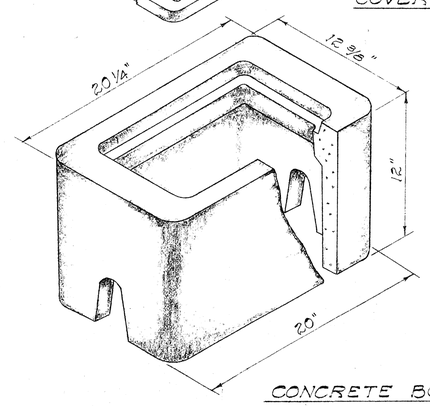

CONCRETE BOX

TYPE "B" METER BOX TYPE 436T

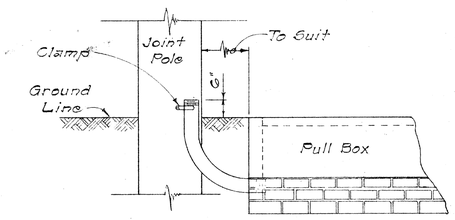

TYPICAL 90° CONDUIT BEND TO POLE

Not To Scale

APPROVED:

HAWAIIAN TELEPHONE CO. DATE

STATE OF HAWAII
DEPARTMENT OF TRANSPORTATION
HIGHWAYS DIVISION

STANDARD DETAILS
TELEPHONE PULL BOXES
Nos. 435T-B, 434T AND 436T

Scale: As Shown Date:

SHEET No. 12 OF 17 SHEETS

62

ORIGINAL PLAN	SURVEY PLOTTED BY	DATE
	DRAWN BY	
	TRACED BY	
NOTE BOOK	DESIGNED BY	
	QUANTITIES BY	
No.	CHECKED BY	

PRINTED ON NO. 1000H CLEARPRINT

FED. ROAD DIST. NO.	STATE	FED. AID PROJ. NO.	FISCAL YEAR	SHEET NO.	TOTAL SHEETS
HAWAII	HAWAII	I-H1-1(75):8	1969	63	181

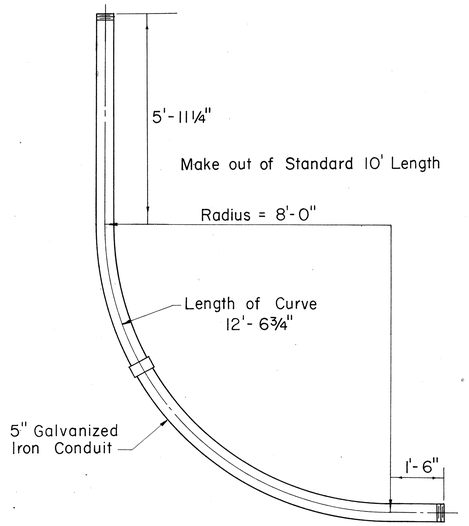

46 KV COMBINATION RISER AND BEND

(8'-0" RADIUS)

Not to Scale

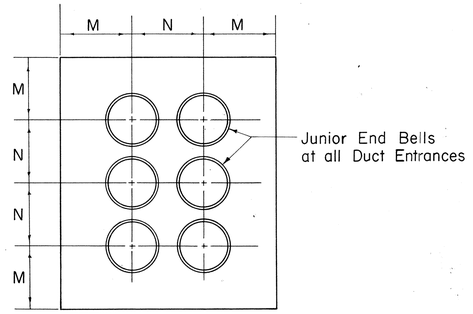

TYPICAL DUCT DETAIL AT MANHOLE WALL

Not to Scale

SIZE	M	N
3"	5"	6"
4"	5½"	7"
4½"	5½"	7½"
5"	6"	8"

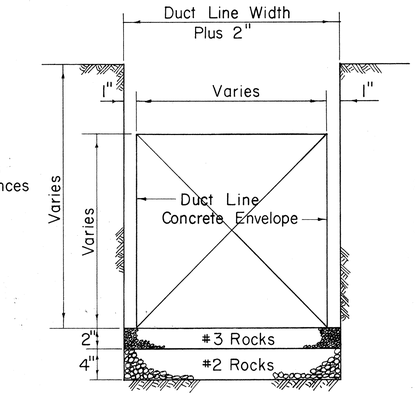

TYPICAL EXCAVATION DETAIL

Not to Scale

NOTES

1. Size of Concrete Envelope and Depth of Excavation to be determined by Project concerned.
2. Widen Trench Excavation when Forms are used.
3. Rock Foundation required only when Water is encountered.

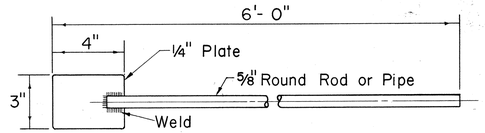

CONCRETE DUCT ENVELOPE TAMPING ROD

Scale: 3" = 1'-0"

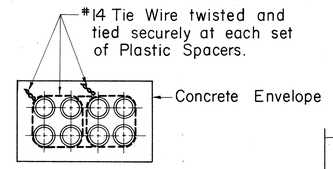

TIE WIRE DETAIL

FOR DUCT LINE MORE THAN 4 DUCTS WIDE

Not to Scale

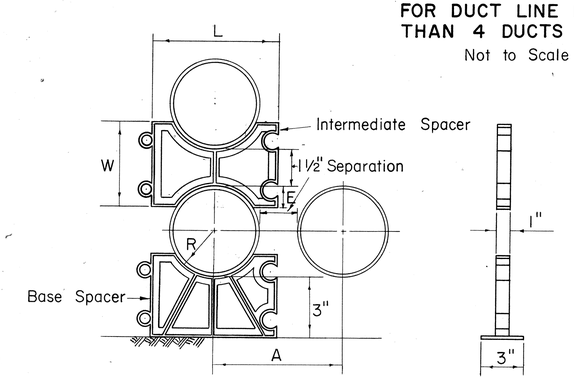

TYPICAL PLASTIC SPACERS

Not to Scale

SIZE	R	E	W	A	L
3"	1 27/32"	7/8"	3 1/4"	5 1/8"	5"
4"	2 13/32"	1 1/8"	3 3/4"	6 1/4"	6 1/8"
4½"	2 23/32"	1 1/4"	4"	6 7/8"	6 3/4"
5"	3 1/16"	1 3/8"	4 1/4"	7 5/8"	7 1/2"

For 1½" Separation

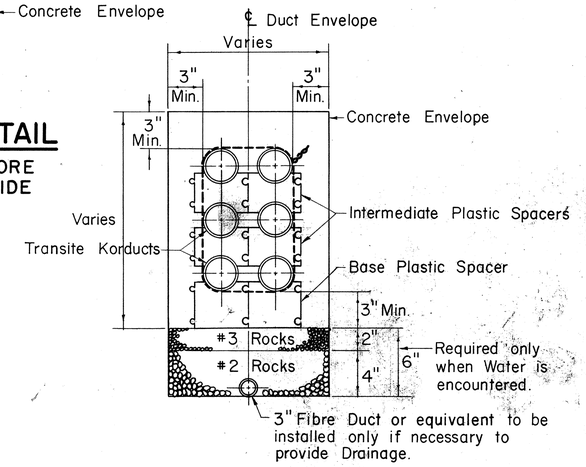

TYPICAL DUCT PLASTIC SPACERS & DRAINAGE SECTION

(6 WAY DUCT SHOWN - 3 HIGH - 2 WIDE)

Not to Scale

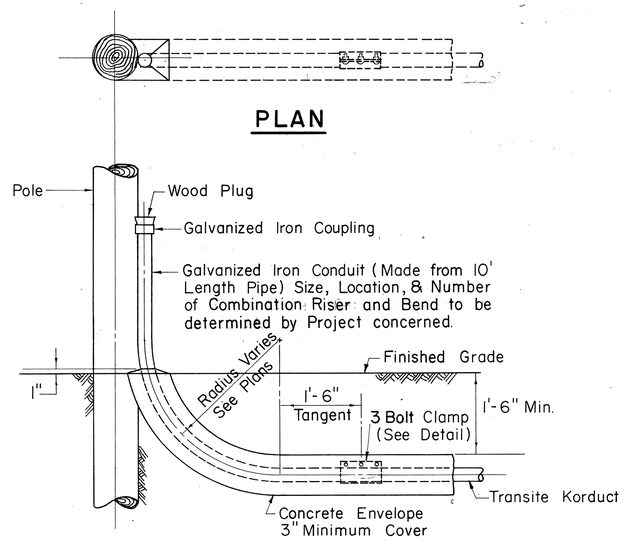

TYPICAL DETAIL COMBINATION RISER AND BEND

Scale: ¾" = 1'-0"

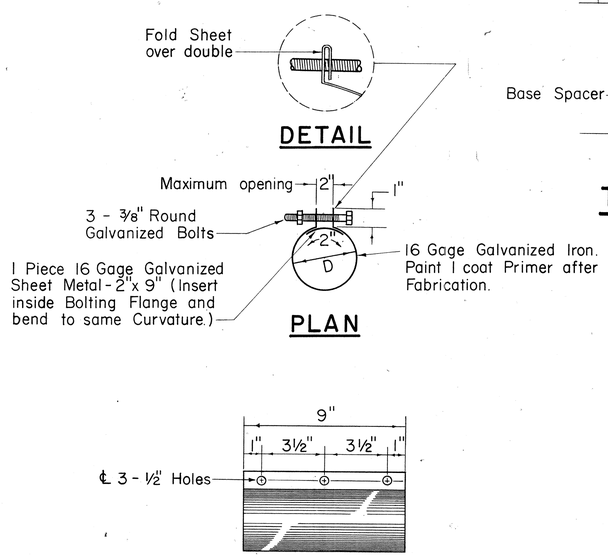

3 BOLT CLAMP DETAIL

Scale: 3" = 1'-0"

HECo., Inc. Drawing Number	
18585	SHEET No. 1 OF 2 SHEETS

STATE OF HAWAII
DEPARTMENT OF TRANSPORTATION
HIGHWAYS DIVISION

STANDARD DETAILS

CONSTRUCTION STANDARDS
TRANSITE KORDUCTS
UNDERGROUND DUCT LINES

Scales: As Noted Date

SHEET NO. 13 OF 17 SHEETS

FED. ROAD DIST. NO.	STATE	FED. AID PROJ. NO.	FISCAL YEAR	SHEET NO.	TOTAL SHEETS
HAWAII	HAWAII	I-HI-1(79).8	1969	64	181

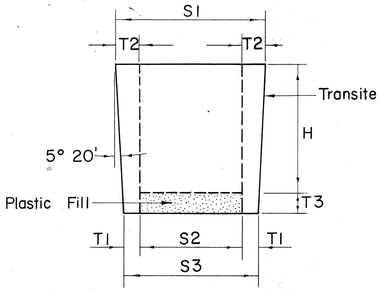

PLUGS FOR TRANSITE KORDUCTS

Not to Scale

SIZE	H	S1	S2	S3	T1	T2	T3
3"	4"	$3\frac{3}{8}$"	2"	$2\frac{5}{8}$"	$\frac{5}{16}$"	$\frac{11}{16}$"	$\frac{3}{4}$"
4"	$4\frac{1}{2}$"	$4\frac{27}{64}$"	$2\frac{3}{4}$"	$3\frac{37}{64}$"	$\frac{13}{32}$"	$\frac{27}{32}$"	$\frac{3}{4}$"
$4\frac{1}{2}$"	$4\frac{1}{2}$"	$4\frac{59}{64}$"	3"	$4\frac{5}{64}$"	$\frac{35}{64}$"	$\frac{31}{32}$"	$\frac{3}{4}$"
5"	$4\frac{1}{2}$"	$5\frac{27}{64}$"	$3\frac{1}{2}$"	$4\frac{37}{64}$"	$\frac{35}{64}$"	$\frac{31}{32}$"	$\frac{3}{4}$"

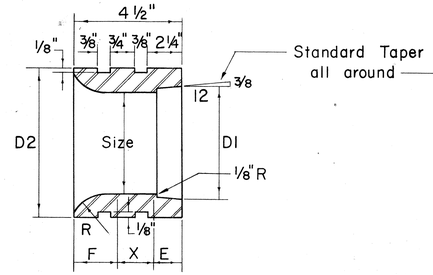

JUNIOR END BELLS

Not to Scale

SIZE	D1	D2	F	X	E	R
3"	$3\frac{25}{64}$"	$4\frac{1}{2}$"	$1\frac{11}{32}$"	$1\frac{29}{32}$"	$1\frac{1}{4}$"	$1\frac{3}{4}$"
4"	$4\frac{25}{64}$"	$5\frac{3}{4}$"	$1\frac{9}{16}$"	$1\frac{9}{16}$"	$1\frac{3}{8}$"	2"
$4\frac{1}{2}$"	$4\frac{57}{64}$"	$6\frac{1}{4}$"	$1\frac{9}{16}$"	$1\frac{9}{16}$"	$1\frac{3}{8}$"	2"
5"	$5\frac{29}{64}$"	7"	$1\frac{9}{16}$"	$1\frac{7}{16}$"	$1\frac{1}{2}$"	2"

Note "X"

Provide one set of Spacers
(a) 10 Ft. straight run for 4 Ducts high or less.
(b) 5 Ft. straight run for 5 Ducts high or more.

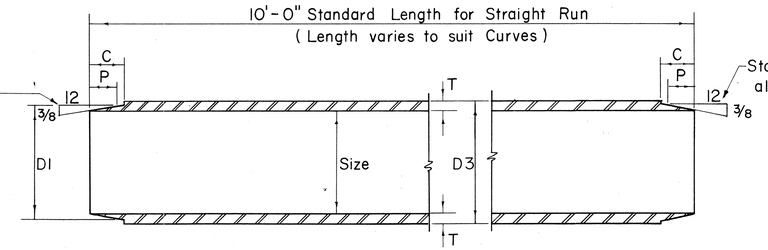

TRANSITE KORDUCTS

Not to Scale

SIZE	D1	D3	C	P	T
3"	$3\frac{25}{64}$"	$3\frac{35}{64}$"	$1\frac{1}{8}$"	$\frac{7}{8}$"	$\frac{17}{64}$"
4"	$4\frac{25}{64}$"	$4\frac{35}{64}$"	$1\frac{1}{4}$"	1"	$\frac{17}{64}$"
$4\frac{1}{2}$"	$4\frac{57}{64}$"	$5\frac{3}{64}$"	$1\frac{1}{4}$"	1"	$\frac{17}{64}$"
5"	$5\frac{29}{64}$"	$5\frac{39}{64}$"	$1\frac{25}{64}$"	$1\frac{1}{8}$"	$\frac{19}{64}$"

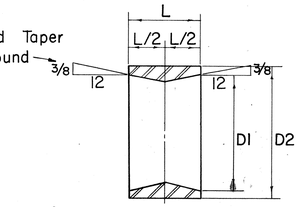

SIZE	D1	D2	L
3"	$3\frac{25}{32}$"	$4\frac{11}{64}$"	$2\frac{1}{4}$"
4"	$4\frac{25}{64}$"	$5\frac{3}{16}$"	$2\frac{1}{2}$"
$4\frac{1}{2}$"	$4\frac{57}{64}$"	$5\frac{49}{64}$"	$2\frac{1}{2}$"
5"	$5\frac{29}{64}$"	$6\frac{21}{64}$"	$2\frac{3}{4}$"

TAPERED COUPLINGS

Not to Scale

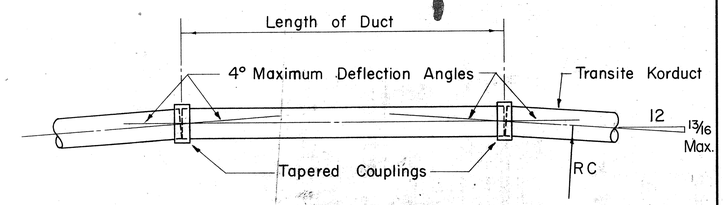

METHOD OF FORMING CURVES

Not to Scale

MINIMUM RADIUS TO FORM CURVES										
LENGTH OF DUCT	1'-0"	1'-6"	2'-0"	2'-6"	3'-0"	3'-6"	4'-0"	4'-6"	5'-0"	5'-6"
MIN. RAD. RC	14'-4"	21'-6"	28'-8"	35'-10"	42'-11"	50'-1"	57'-3"	64'-5"	71'-7"	78'-9"
LENGTH OF DUCT	6'-0"	6'-6"	7'-0"	7'-6"	8'-0"	8'-6"	9'-0"	9'-6"	10'-0"	
MIN. RAD. RC	85'-11"	93'-1"	100'-3"	107'-5"	114'-7"	121'-8"	128'-10"	136'-0"	143'-2"	

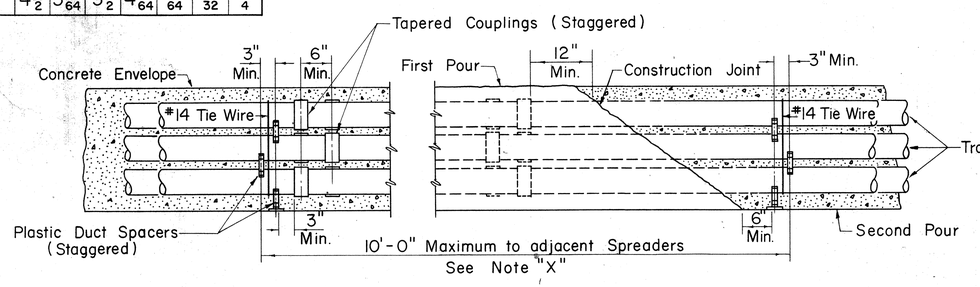

TYPICAL DUCT ENVELOPE ELEVATION

(6 WAY DUCT LINE SHOWN)

Not to Scale

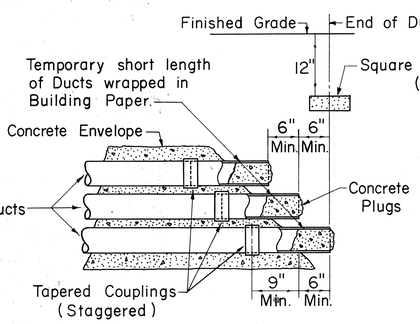

TYPICAL STUB OUT DETAIL

Not to Scale

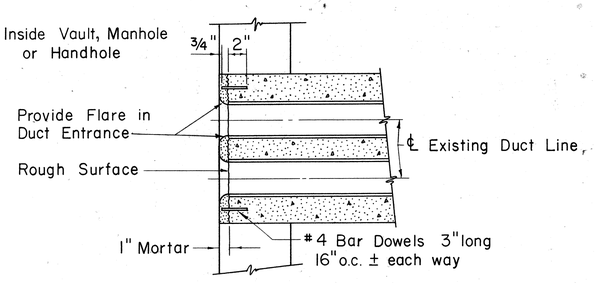

DUCT LINE ENTRANCE AT EXISTING DUCT LINE

Scale: 1½" = 1'-0"

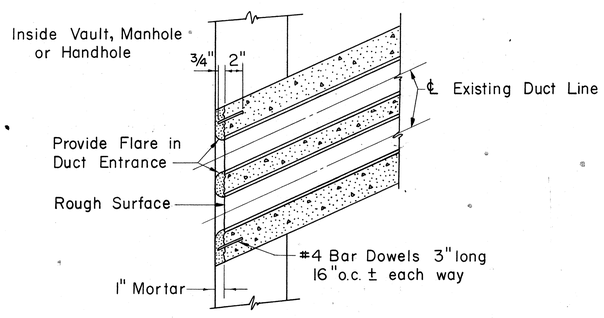

DUCT LINE DIAGONAL ENTRANCE

Scale: 1½" = 1'-0".

HECo., Inc. Drawing Number	
18585	SHEET No. 2 OF 2 SHEETS

STATE OF HAWAII
DEPARTMENT OF TRANSPORTATION
HIGHWAYS DIVISION

STANDARD DETAILS

CONSTRUCTION STANDARDS
TRANSITE KORDUCTS
UNDERGROUND DUCT LINES

Scales: As Noted Date

SHEET NO. 14 OF 17 SHEETS

64

FED. ROAD DIST. NO.	STATE	FED. AID PROJ. NO.	FISCAL YEAR	SHEET NO.	TOTAL SHEETS
HAWAII	HAWAII	I-HI-1(75):8	1969	65	181

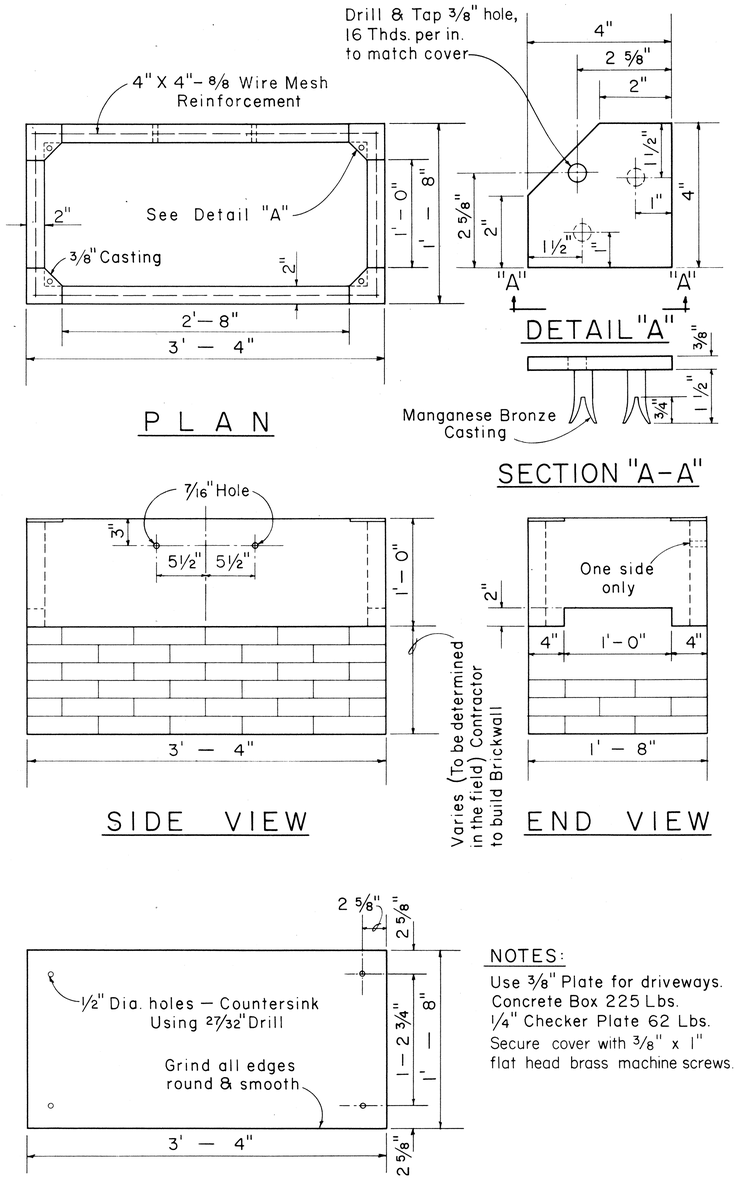

NOTES:

Use 3/8" Plate for driveways.
Concrete Box 225 Lbs.
1/4" Checker Plate 62 Lbs.
Secure cover with 3/8" x 1" flat head brass machine screws.

1/4" CHECKER PLATE COVER

(Hot dip galvanize checkered plate after drilling, countersinking, and grinding edge)

1'-4" X 3'-0" CONCRETE SERVICE BOX

Scale: 1 1/2" = 1'-0"

011250

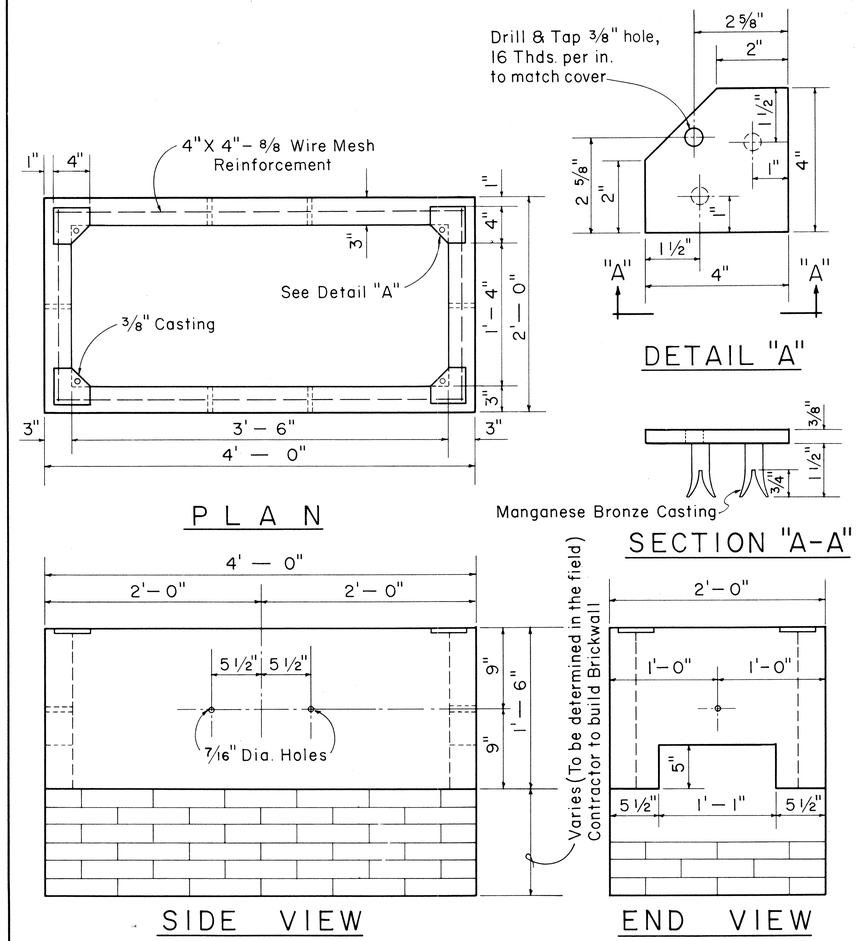

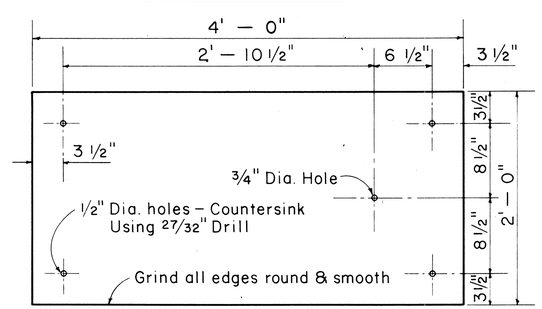

NOTES:

Use 3/8" Plate for driveway.
Concrete Box 575 Lbs.
1/4" Checker Plate 130 Lbs.
Secure cover with 3/8" x 1" flat head brass machine screws.

1/4" CHECKER PLATE COVER

(Hot dip galvanize checkered plate after drilling, countersinking, and grinding edge)

1'-6" X 3'-6" CONCRETE SERVICE BOX

Scale: 1 1/2" = 1'-0"

011255

CREOSOTED DOUGLAS FIR & YELLOW PINE POLE DATA

LENGTH IN FEET	CLASS	APPROX. MINIMUM DIMENSIONS (INCHES) AT TOP DIA.	AT TOP CIR.	6' FROM BUTT DIA.	6' FROM BUTT CIR.	AVERAGE WEIGHT (LBS.) DOUGLAS FIR	POLE SETTING DEPTH (FT.) IN SOIL	IN ROCK	BREAKING LOAD 2'-0" BELOW TOP OF POLE (LBS.)
25	5	6.04	19	8.26	26	525	4.5	3	1900
30	3	7.32	23	10.32	32.5	810	5	3.5	3000
	5	6.04	19	8.90	28	600	5	3.5	1900
35	2	7.96	25	12.23	37.5	1260	5	3.5	3700
	5	6.04	19	9.55	30	770	5	3.5	1900
40	3	7.32	23	11.77	37	1320	5.5	3.5	3000
45	2	7.96	25	13.20	41.5	1845	6	4.	3700
	3	7.32	23	12.25	38.5	1575	6	4	3000
50	2	7.96	25	13.70	43.	2150	6.5	4	3700
	3	7.32	23	12.70	40	1850	6.5	4	3000
55	1	8.59	27	15.11	47.5	2860	7	4.5	4500
	2	7.96	25	14.15	44.5	2475	7	4.5	3700
	3	7.32	23	13.20	41.5	2145	7	4.5	3000
60	1	8.59	27	15.75	49.5	3360	7	4.5	4500
	2	7.96	25	14.62	46	2820	7	4.5	3700
65	1	8.59	27	16.20	51	3835	7.5	5	4500
	2	7.96	25	15.11	47.5	3250	7.5	5	3700
70	1	8.59	27	16.70	52.5	4340	7.5	5	4500
	2	7.96	25	15.60	49	3640	7.5	5	3700
75	1	8.59	27	17.20	54	4800	8	5.5	4500
	2	7.96	25	16.05	50.5	4050	8	5.5	3700
80	1	8.59	27	17.50	55	5240	8	6	4500
	2	7.96	25	16.40	51.5	4400	8	6	3700
85	1	8.59	27	18.00	56.5	5780	8.5	6.5	4500
	2	7.96	25	16.88	53	4930	8.5	6.5	3700
90	1	8.59	27	18.30	57.5	6300	8.5	6.5	4500
	2	7.96	25	17.20	54	5400	8.5	6.5	3700

NOTE:

The ultimate fiber stress for creosoted Southern Yellow Pine & Douglas Fir is 7,400 Lbs. per square inch.

Weights are for untreated poles. Add 5% as estimate of added weight of creosote treatment.

REFERENCES:

American Standards Association 05.4-1941, 05.6-1945.
Standard Handbook for Electrical Engineers, Eighth Edition
H. E. Co. Specification for Poles.

WOOD POLE DATA

STATE OF HAWAII
DEPARTMENT OF TRANSPORTATION
HIGHWAYS DIVISION

STANDARD DETAILS
H. E. Co. AND H. T. Co.
SERVICE BOX DETAILS
AND WOOD POLE DATA

Scales: As Noted Date

SHEET NO. 15 OF 17 SHEETS

ORIGINAL PLAN | NOTE BOOK No. | SURVEY PLOTTED BY | DRAWN BY | TRACED BY | DESIGNED BY | QUANTITIES BY | CHECKED BY | DATE

FED. ROAD DIST. NO.	STATE	FED. AID PROJ. NO.	FISCAL YEAR	SHEET NO.	TOTAL SHEETS
HAWAII	HAWAII	I-H1-1(75)8	1969	66	181

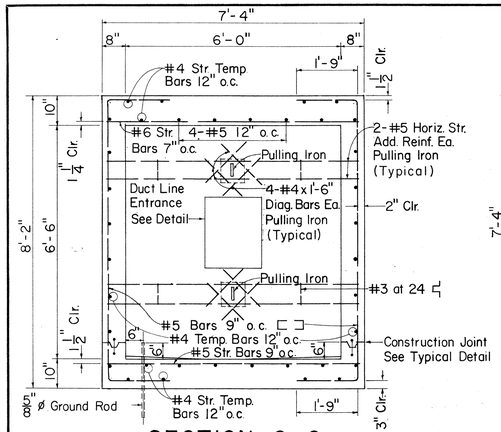

SECTION C-C

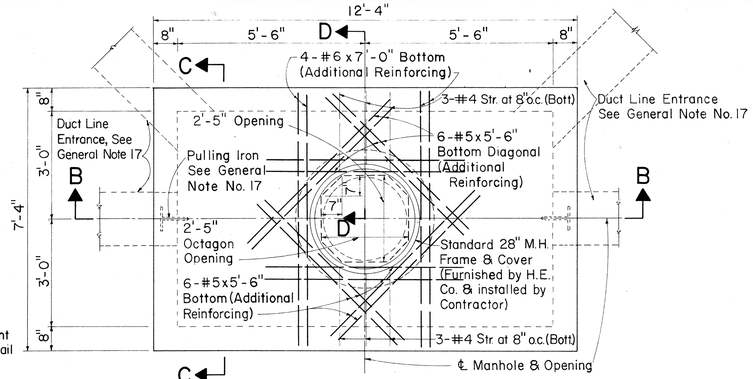

TOP PLAN

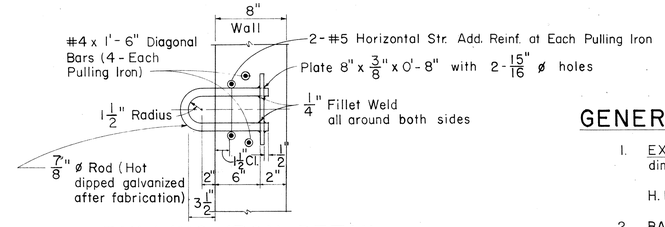

PULLING IRON DETAIL

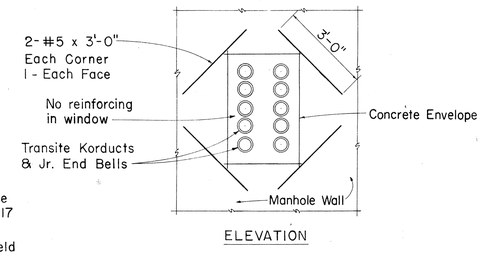

ELEVATION

REINFORCING AT DUCT WINDOW

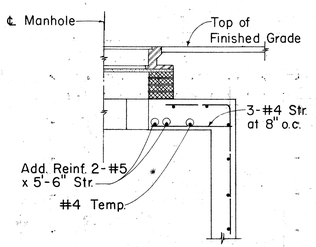

SECTION D-D

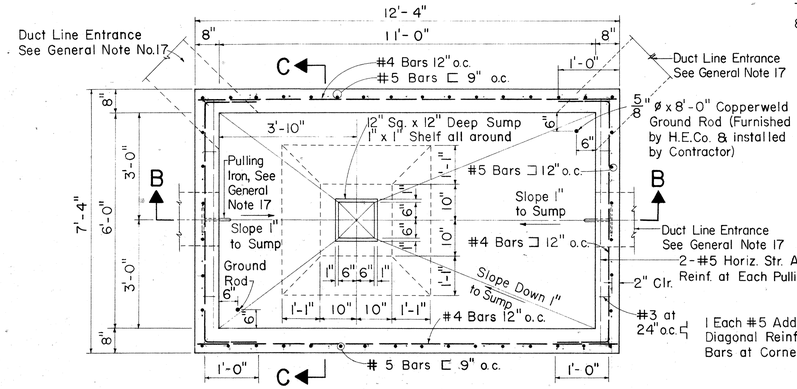

SECTIONAL PLAN A-A

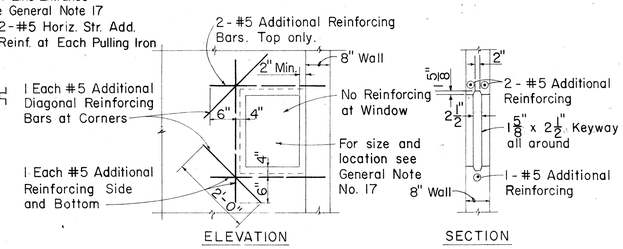

NOTE:
Provide opening for future duct line. Fill opening with bricks with mortar joints as required. (See project drawing).

KNOCKOUT FOR FUTURE DUCT LINE

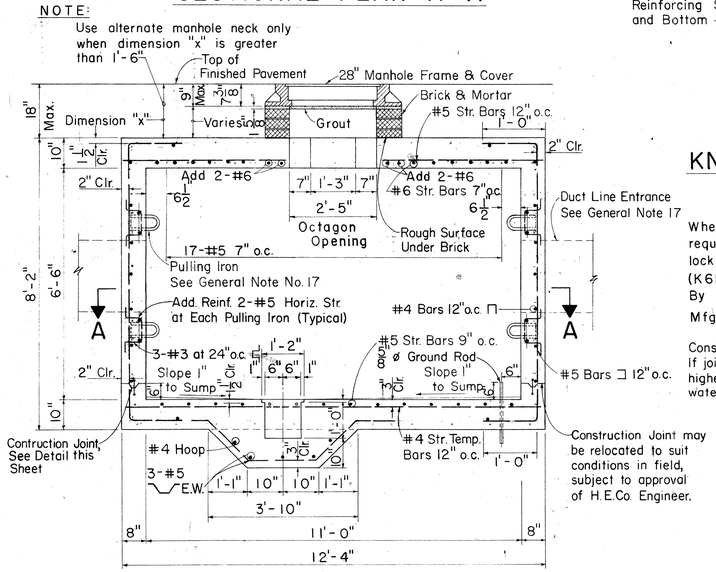

SECTION B-B

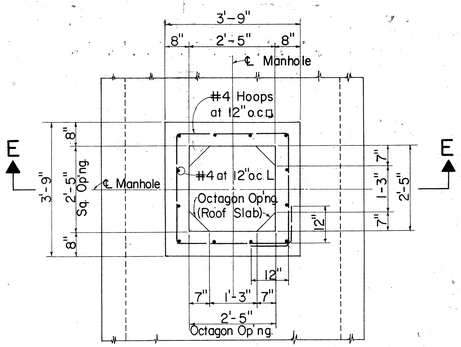

PLAN

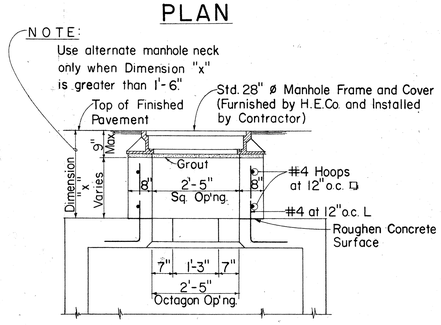

SECTION E-E

ALTERNATE MANHOLE NECK

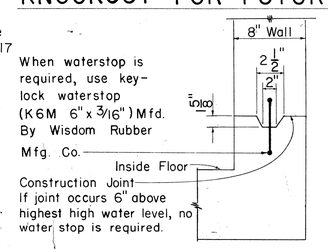

TYPICAL DETAIL OF CONSTRUCTION JOINT AND KEYWAY

GENERAL NOTES

1. EXCAVATION : Excavate for manhole to accurate alignment, grades and dimensions as shown on drawings.
   All excavation must be approved by Engineering Dept. H.E.Co. before any concrete is poured.
   All excess cut shall be backfilled with concrete or rocks.
2. BACKFILL : Remove all debris before backfilling. Backfill in accordance with latest specifications of Division of Highways, State of Hawaii.
3. All work to be done in dry.
4. Concrete shall be Class A-1 conforming to the requirements of Section 47 of the Special Provisions.
5. MIXING : Ready-Mixed A.S.T.M. C-94-47.
6. REINFORCING : Round deformed bars (clean and new).
7. SPLICE : Lap 30 bar diameters unless otherwise shown.
8. CURING : Keep concrete moist at least 7 days after pouring. (By approved method).
9. FINISH : All surfaces smooth and free from defects.
   Top of manhole - wood floated. Manhole floor - steel troweled.
   Inside walls and ceiling - cement washed.
10. Install all inserts, including pulling irons, ground rods, etc, before pouring concrete.
11. POURING: Notify the H.E.Co. Contracting and Inspection Division, 24 hours before pouring any concrete. All concrete pouring shall be done in the presence of an H.E.Co. Engineer or Inspector.
12. FORMS : Make of good sound lumber, of sufficient strength, water tight and conforming to shape and dimensions indicated on drawings.
13. The Hawaiian Electric Co. Inc. to furnish and Contractor to install, for each manhole:

    A - 2-⅝" ø x 8'-0" copperweld ground rods.

    B - Standard 28" manhole frame and cover. (H.E. Standard)
14. Slope manhole floor down 1" toward sump.
15. All work shall be subject to inspection by the Hawaiian Electric Co. Inc.; and/or Division of Highways, State of Hawaii; and/or Division of Engineering, City & County of Honolulu.
16. All materials shall be new and shall be manufactured in the United States.
17. For number, size, and exact location of ducts entrances and pulling irons, refer to project drawings.

REFERENCE DRAWINGS

U-10082 - Standard H.E.Co. 28" Manhole Frame and Cover.
18585 - Underground Ductline Construction Standards - Details.
18585A - Underground Ductline Construction Standards - Specifications.

REINFORCED CONCRETE QUANTITIES

QUANTITY OF MATERIALS FOR DEPTH "D"=5'-0"
Total Concrete = 11.8 Cu. Yds.
Total Reinf. Steel = 1,363 Lbs.
QUANTITY OF MATERIALS FOR ALTERNATE NECK "D"= 1'-0"
Concrete = 0.29 Cu. Yds.
Reinf. Steel = 39 Lbs.
MATERIALS FOR 6" DEPTH OF 8" THICK WALL
Concrete = 0.45 Cu. Yds.
Reinf. Steel = 37 Lbs.

FOR USE IN AREAS SUBJECT TO PRESENT AND FUTURE VEHICULAR TRAFFIC

HECo., Inc. Drawing Number
18775 2 SHEETS

STATE OF HAWAII
DEPARTMENT OF TRANSPORTATION
HIGHWAYS DIVISION

STANDARD DETAILS
MANHOLE TYPE No. 1
(6'-0" x 11'-0")
UNDERGROUND STANDARDS

Scales: Not to Scale

SHEET NO. 16 OF 17 SHEETS

ORIGINAL PLAN		DATE
	SURVEY PLOTTED BY	
	DRAWN BY	
	TRACED BY	
NOTE BOOK	DESIGNED BY	
	QUANTITIES BY	
No.	CHECKED BY	

FED. ROAD DIST. NO.	STATE	FED. AID PROJ. NO.	FISCAL YEAR	SHEET NO.	TOTAL SHEETS
HAWAII	HAWAII	I-H1-1(75)8	1969	67	181

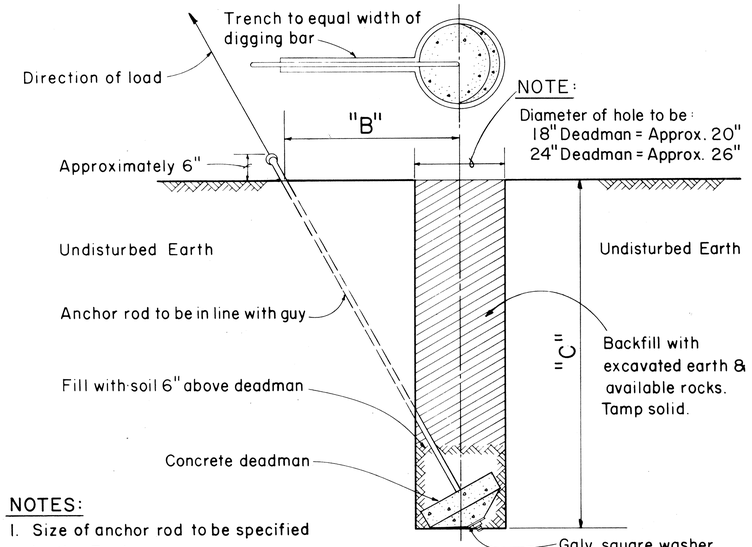

NOTES:
1. Size of anchor rod to be specified by the Engineer
2. Use Anchoring Data.

GUY ANCHOR DEADMAN

Scale: 3/4" = 1' - 0"

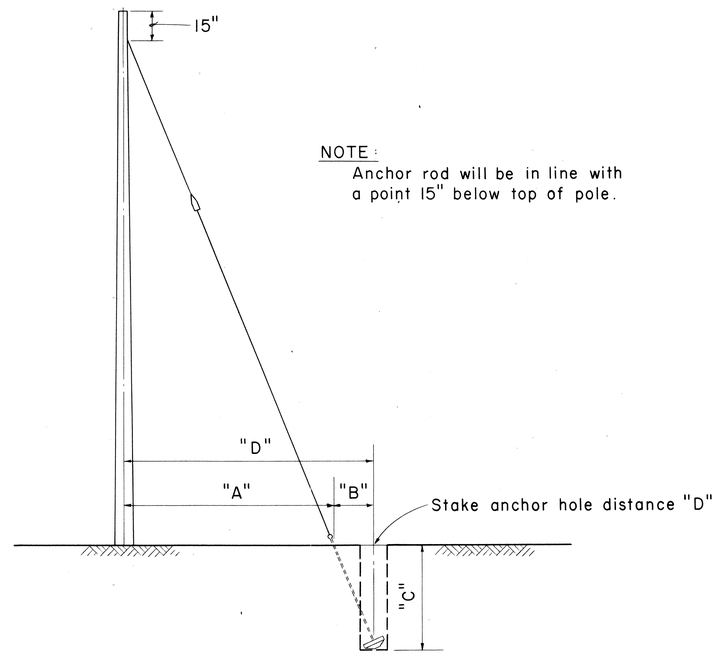

Not to Scale

FOR 25', & 30' POLES WITH 8'-0" ANCHOR RODS				
"A"	"B"	"C"		"D" = ("A" + "B")
LEAD-ANCHOR ROD TO ℄ OF POLE	ANCHOR ROD TO ℄ OF HOLE	VERTICAL DEPTH 18" D.M.	VERTICAL DEPTH 24" D.M.	TOTAL DISTANCE POLE TO HOLE
5'-0"	1'-8"	7'-1"	7'-4"	6'-8"
10'-0"	3'-0"	6'-7"	7'-0"	13'-0"
15'-0"	4'-0"	6'-1"	6'-6"	19'-0"
20'-0"	4'-8"	5'-6"	5'-10"	24'-8"
25'-0"	5'-2"	4'-11"	5'-4"	30'-2"
FOR 35' THRU 70' POLES WITH 8'-0" ANCHOR RODS				
5'-0"	1'-0"	7'-3"	7'-4"	6'-0"
10'-0"	1'-11"	7'-1"	7'-3"	11'-11"
15'-0"	2'-8"	6'-9"	7'-1"	17'-8"
20'-0"	3'-3"	6'-6"	6'-10"	23'-3"
25'-0	3'-10"	6'-2"	6'-7"	28'-10"
FOR 40' THRU 70' POLES WITH 1 1/4" x 10'-0" ANCHOR RODS				
5'-0"	1'-7"		9'-4"	6'-7"
10'-0"	3'-0"		9'-0"	13'-0"
15'-0"	4'-2"		8'-6"	19'-2"
20'-0"	5'-3"		7'-11"	25'-3"
25'-0"	6'-2"		7'-3"	31'-2"

D. M. = Deadman

TABLE 2 ANCHOR ROD - ANCHOR SLUG - SQUARE WASHER COMBINATION

H.E. CODE NO.	ANCHOR ROD	WORKING TENSION 1/2 ULT (LBS.)	H.E. CODE NO.	CONC. ANC. (IN.)	H.E. CODE NO.	WASHER SIZE	QTY.
617	5/8" x 8'-0" Steel	8,000	518	18	2320	4" x 4" x 3/16"	2
615	5/8" x 8'-0" Cu Cov Stl	9,250	518	18	**	3" x 3" x 1/8"	2
618	3/4" x 8'-0" Steel	11,500	518	18	2330	6" x 6" x 3/8"	1
619	1" x 8'-0" Steel	18,000	524	24	2331	6" x 6" x 1/2"	1
616	1" x 8'-0" Cu Cov Stl	22,500	524	24	**	4" x 4" x 3/16"	2
613	1 1/4" x 10'-0" Steel	29,000	524	24	2330	6" x 6" x 3/8"	2

** Use bronze square washers included in anchor rod assembly on copper covered steel (Cu Cov Stl) anchor rods.

ANCHORING DATA

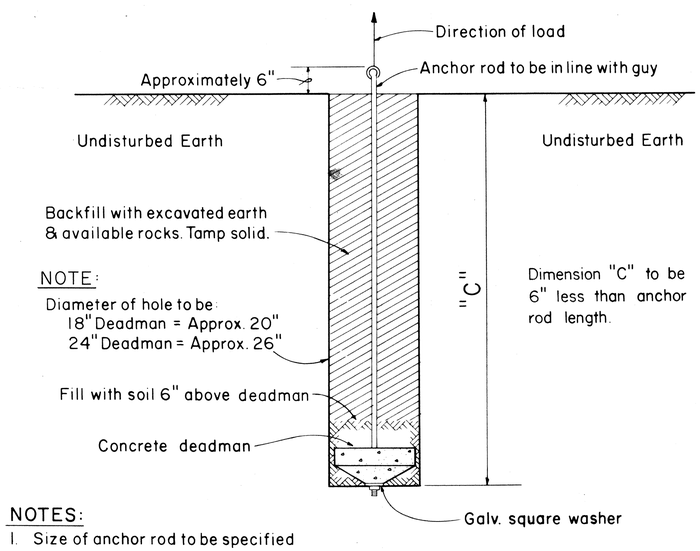

NOTES:
1. Size of anchor rod to be specified by the Engineer.
2. Use Anchoring Data.

SIDE - WALK ANCHOR

Scale: 3/4" = 1' - 0"

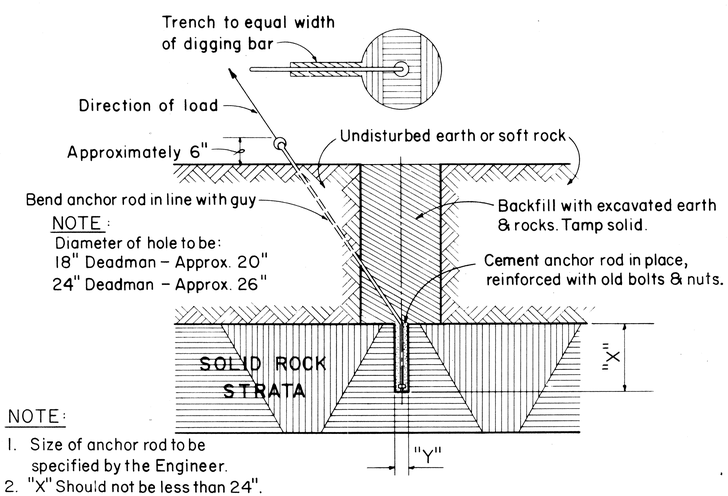

NOTE:
1. Size of anchor rod to be specified by the Engineer.
2. "X" Should not be less than 24". If "X" is less than 24" complete hole & install anchor.
3. "Y" 5/8" Anchor rod drill 2" hole
   3/4" Anchor rod drill 2" hole
   1" Anchor rod drill 2 1/2" hole
   1 1/4" Anchor rod drill 3" hole
4. Use Anchoring Data.

ROCK ANCHOR

Not to Scale

STATE OF HAWAII
DEPARTMENT OF TRANSPORTATION
HIGHWAYS DIVISION

STANDARD DETAILS
H.E. Co. AND H.T. Co.
ANCHOR DETAILS AND ANCHORING DATA

Scales: As Noted Date

SHEET No. 17 OF 17 SHEETS