INDEX TO DRAWINGS

WIDENING OF AUSTIN BISHOP GRADE SEPARATION

1. BRIDGE LAYOUT.
2. CROSS SECTION & FOUNDATION PLAN.
3. FRAMING PLAN & LONGITUDINAL SECTION.
4. NORMAL DECK SECTION & DETAILS.
5. TOP SLAB REINFORCING PLAN.
6. BOTTOM SLAB REINFORCING PLAN.
7. PIER CAP & PIER FOOTING REINFORCEMENT.
8. PLAN & ELEVATION OF ABUTMENT #1 & #2.
9. PLAN & ELEVATION OF ABUTMENT #1.
10. PLAN & ELEVATION OF ABUTMENT #2.
11. ABUTMENT SECTIONS & DETAILS.
12. CONCRETE MEDIAN BARRIER DETAILS.
13. BORING LOGS.
14. ELECTRICAL PLAN & DETAILS.

STANDARD BRIDGE DETAIL DRAWINGS

STATE OF HAWAII
DEPARTMENT OF TRANSPORTATION
HIGHWAYS DIVISION

S1. STANDARD BRIDGE DETAILS.
S2. CONCRETE BOX GIRDER.
S3. CONCRETE BOX GIRDER.
S4. CONCRETE BOX GIRDER.
S5. METAL BRIDGE RAILING.
S6. METAL BRIDGE RAILING.
S7. RETAINING WALL TYPE T-1.
S8. RETAINING WALL TYPE T-1.
S9. METAL GUARD RAIL CONNECTION TO CONCRETE BARRIER.

NOTES FOR CONSTRUCTION WITHIN STATE RIGH-OF-WAY

1. THE CONTRACTOR SHALL OBTAIN A CONSTRUCTION PERMIT FROM THE STATE'S HIGHWAY DISTRICT ENGINEER AT PRIOR TO THE COMMENCEMENT OF WORK WITHIN STATE HIGHWAY RIGHT-OF-WAY.
2. CONSTRUCTION AND RESTORATION OF ALL EXISTING HIGHWAY FACILITIES WITHIN STATE RIGH-OF-WAY SHALL BE DONE IN ACCORDANCE WITH ALL APPLICABLE SECTIONS OF THE STANDARD SPECIFICATIONS FOR ROAD & BRIDGE CONSTRUCTION, DATED 1969, AND THE SPECIFICATION FOR INSTALLATION OF MISCELLANEOUS IMPROVEMENTS WITHIN STATE HIGHWAYS, DATED JULY 1, 1970, OF THE STATE HIGHWAYS DIVISION.
3. THE CONTRACTOR SHALL PROVIDE, INSTALL, AND MAINTAIN ALL NECESSARY SIGNS, LIGHTS, FLARES, BARRICADES, MARKERS, CONES, AND OTHER PROTECTIVE FACILITIES AND SHALL TAKE ALL NECESSARY PRECAUTIONS FOR THE PROTECTION AND FOR THE CONVENIENCE AND SAFETY OF PUBLIC TRAFFIC. ALL SUCH PROTECTIVE FACILITIES & PRECAUTIONS TO BE TAKEN SHALL CONFORM WITH THE "RULES AND REGULATIONS GOVERNING THE USE OF TRAFFIC CONTROL DEVICES AT WORK SITES ON OR ADJACENT TO PUBLIC STREETS AND HIGHWAYS" ADOPTED BY THE HIGHWAY SAFETY COORDINATOR, AND THE U.S. BUREAU OF PUBLIC ROADS' "MANUAL ON UNIFORM TRAFFIC CONTROL DEVICES FOR STREETS AND HIGHWAYS, PART-V TRAFFIC CONTROLS FOR HIGHWAY CONSTRUCTION AND MAINTENANCE OPERATIONS", AS AMENDED.

GENERAL NOTES

SPECIFICATIONS AASHO:

STANDARD SPECIFICATION FOR HIGHWAY BRIDGES (9TH EDITION) WITH SUBSEQUENT ADDITIONS & MODIFICATIONS

DESIGN LOADS

HS-20-44 OR INTERSTATE LOADING

DESIGN STRESSES

REINFORCED CONCRETE: SEE AASHO SPECIFICATIONS AND GENERAL PROVISIONS, EXCEPT AS OTHERWISE NOTED ON PLAN.

CLASS A	CLASS E (FOR BRIDGE COLUMNS ONLY)	fs = 24,000 psi (FOR CLASS E ONLY)
f'c = 3,000 psi, fc = 1,200 psi, n = 10	f'c = 5,000 psi, fc = 2,000 psi n = 6	fs = 20,000 psi

MATERIALS

1. CONCRETE: ALL CONCRETE SHALL BE CLASS A, EXCEPT AS OTHERWISE NOTED ON PLANS OR INDICATED IN SPECIFICATIONS.
2. REINFORCING STEEL: ALL REINFORCING STEEL TO BE ASTM DESIGNATION A-615 GRADE 40, EXCEPT AS OTHERWISE NOTED. FOR PIER VERT. REINFORCING STEEL TO BE ASTM DESIGNATION A-615 GRADE 60.
3. ITEMS INCIDENTAL TO CONCRETE WILL NOT BE PAID FOR SEPARATELY
   A. ALL PREMOLDED JOINT FILLER AND SEALANT.
   B. ALL PREMOLDED ASPHALTIC FILLER AROUND UTILITY LINE THROUGH CONCRETE SECTIONS
   C. WIDENING OF EXISTING SIDEWALK
   D. JOINTS DOWELS & SLEEVES BETWEEN NEW & EXISTING FOOTING
   E. REMOVAL OF EXISTING WING WALLS & ABUTMENT PIERS & REWORK ON TOP OF ABUT. PIERS.
4. ADMIXTURE IN CONCRETE: SEE SPECIAL PROVISIONS

CONSTRUCTION METHODS

1. SEE STANDARD SPECIFICATIONS & SPECIAL PROVISIONS
2. SIDE OF SPREAD FOOTINGS SHALL BE EXCAVATED AND POURED TO NEAT LINES FOR EXCAVATION OF BOTTOM OF FOOTINGS, SEE STANDARD SPECIFICATIONS. IN CASE OF OVER EXCAVATION, SPACE BETWEEN FOOTING & GROUND SHALL BE FILLED WITH CONCRETE AT THE CONTRACTORS EXPENSE & AS DIRECTED BY THE ENGINEER. THE FILL CONCRETE SHALL HAVE A MINIMUM QUALITY OF CLASS D-1.
3. THE CONTRACTOR SHALL VERIFY THE LOCATION OF ALL UTILITY LINES & NOTIFY THE RESPECTIVE OWNERS BEFORE COMMENCING EXCAVATION WORK.
4. BACKFILL BELOW ABUTMENT ROCKER SHALL BE IN PLACE BEFORE ROCKER IS POURED. REMAINDER OF BACK FILL TO BE PLACED SIMULTANEOUSLY AT EACH ABUTMENT AFTER SUPER STRUCTURE FALSE WORK IS RELEASED.
5. IN GENERAL, TOP & EDGE OF CONCRETE DECK OF SUPER STRUCTURE SHALL BE CONSTRUCTED TO FOLLOW THE FINISH ROADWAY VERTICAL & OR HORIZONTAL CURVES, GRADES SLOPES & ELEVATIONS.
6. OPERATION OF CONSTRUCTION SHALL BE LIMITED WITHIN THE STATE RIGHT-OF-WAY.
7. VERTICAL PIER COL. BARS SHALL BE ARRANGED IN SUCH A MANNER AS TO MISS PIER CAP REINF. BARS ABOVE.
8. WING WALLS ON FILL SHALL BE CONSTRUCTED AFTER THE ROADWAY FILL IS COMPLETED TO REQ'D. FIN. GRADE.
9. FOR CONCRETE FINISHES SEE SPECIAL PROVISIONS.
10. CONTRACTOR SHALL HAVE THE SOLE RESPONSIBILITY FOR ANY DAMAGE TO THE REMAINING EXISTING STRUCTURAL MEMBERS DURING CONSTRUCTION OF NEW BRIDGE, REMOVAL OF EXISTING BRIDGE RAIL, SIDEWALK, WING WALLS, ETC..

CAMBER

OBTAIN DEAD LOAD CAMBER BY FORMING & SHORING CONCRETE SURFACES ABOVE THE PROFILE GRADES WITH AMOUNT AS SHOWN IN DEAD LOAD CAMBER DIAGRAM.

REFERENCE

1. REFER TO STANDARD DETAIL DRAWINGS SHTS # S1-S9 INCL., FOR DETAILS NOT COVERED BY THESE DWGS.
2. REPORT ON STRUCTURE FOUNDATIONS INTERSTATE PROJECT I-HI-1(9) WAIAU TO AIEA STREAM BY HIGHWAYS DIVISION, MATERIALS, TESTING & RESEARCH BRANCH (APRIL 1968)

SYMBOLS & ABBREVIATIONS

(A/14) (3/14) — Alphabet (A) or numeral (3) indicate sec. or det. designation. No. (14) indicates sht. no. where sec. or detail is drawn on.

B5	Boring	no. and designation.
B-A, B-B	Beam	designations.
G-1, G-2	Girder	designations.
P-1, P-2	Pier	designations.
PG-2	Prestressed girder type 2.	

(A)
ABUT. Abutment.
ADJ. Adjacent.
ALT. Alternate.
AZ. Azimuth.

(B)
BAL. Balance.
B.F. Both face.
℄ Base line.
BM. Beam.
B.V.C. Begin vertical curve.
B, BOT, BOTT. Bottom.

(C)
℄ Center line.
C.G. Center of gravity. Change of grade.
CL. Clear or closed.
COL. Column.
CONN. Connection.
CONST. Construction.
CONT. Continuous.

(D)
DET. Detail.
DIA, ϕ Diameter.
DIAG. Diagonal.
DIAGM. Diagram.
DRWG. Drawing.

(E)
EA. Each.
E.F. Each face.
E.P. Edge of paving.
EL, ELEV. Elevation.
E.V.C. End vertical curve.
EQ. Equal.
EXP. Expansion.
EXT. Exterior.
EXIST. Existing.

(F)
F.F. Far face.
FTG. Footing.

(G)
GALV. Galvanized.

(H)
HOR. Horizontal.

(I)
I.B., INCLU. Inbound. Inclusive.
I.R. Inner ring. (col. bars.)
INT. Interior.

(J)
JT. Joint.

(L)
LG. Long.
LOC. Location.
LONGIT. Longitudinal.
LT. WT. Light weight.

(M)
MAX. Maximum.
MIN. Minimum.

(N)
N.F. Near face.
NO. Number.

(O)
O.C. On center.
OPN'G. Opening.
O.B. Outbound.
O TO O. Out to out.
O.R. Outer ring. (col. bars.)

(P)
ℙ Plate.
PT. Point.

(R)
R. Radius.
REF. Reference.
REINF. Reinforcement.
R.C. Reinforced concrete.
REQ'D. Required.

(S)
SEC. SECT. Section.
SHT. Sheet.
SPC. Spaces.
SPCG. Spacing.
STA. Station.
STR. Straight.
STIRR. Stirrup.
STD. Standard.
SYMM. Symmetrical.

(T)
T. Top.
TYP. Typical.

(V)
VERT. Vertical.
V.C. Vertical curve.

(W)
W.P. Working point.

C. L. PIEN — REGISTERED PROFESSIONAL ENGINEER No. 2348 — HAWAII, U.S.A.

THIS WORK WAS PREPARED BY ME OR UNDER MY SUPERVISION

APPROVED:

for CHIEF, HIGHWAYS DIVISION
DEPT. OF TRANSPORTATION

12/2/70
DATE

REVISION DATE	DESCRIPTION	MADE BY	APPROVED

COMMUNITY PLANNING INCORPORATED
CIVIL ENGINEERS — SURVEYORS — CONSULTANT PLANNERS

PETER HSI ASSOCIATES INC.
STRUCTURAL ENGINEERS

WAIAU-WAIMALU ACCESS ROAD
WAIAU, OAHU, HAWAII
OWNER: B.P. BISHOP ESTATE
OCEANVIEW VENTURES
DEVELOPERS: AMFAC-TROUSDALE
OCEANVIEW VENTURES
TAX MAP KEY: 9-8-02: 2&3

WIDENING OF AUSTIN BISHOP GRADE SEPARATION
INDEX TO DRWGS. ABBREVIATIONS & NOTES

APPROVED:

CHIEF, DIVISION OF ENGINEERING

REG. ENGR. CERT. NO. 470-E

FILE	POCKET	FOLDER	NO.

185-S1 AS BUILT

SHEET A OF 1 SHEETS

DATE: 9-18-70 10-2-70 FINAL

K+E CRYSTALENE® LA 3681 TRACING PAPER

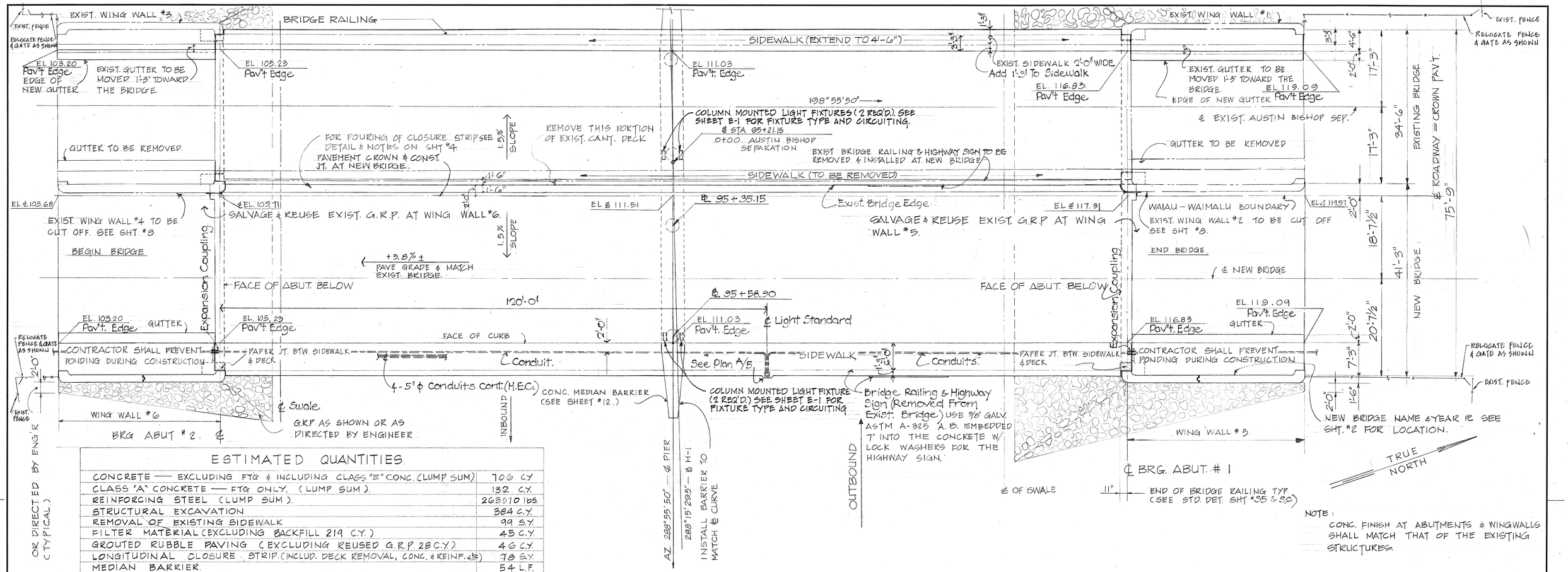

NOTE:
CONC. FINISH AT ABUTMENTS & WINGWALLS SHALL MATCH THAT OF THE EXISTING STRUCTURES.

ESTIMATED QUANTITIES

CONCRETE — EXCLUDING FTG & INCLUDING CLASS "E" CONC. (LUMP SUM)	706 C.Y.
CLASS "A" CONCRETE — FTG ONLY. (LUMP SUM).	132 C.Y.
REINFORCING STEEL (LUMP SUM).	263510 lbs.
STRUCTURAL EXCAVATION	384 C.Y.
REMOVAL OF EXISTING SIDEWALK	99 S.Y.
FILTER MATERIAL (EXCLUDING BACKFILL 219 C.Y.)	45 C.Y.
GROUTED RUBBLE PAVING (EXCLUDING REUSED G.R.P. 28 C.Y.)	46 C.Y.
LONGITUDINAL CLOSURE STRIP (INCLUD. DECK REMOVAL, CONC. & REINF. etc)	78 S.Y.
MEDIAN BARRIER.	54 L.F.
REMOVAL & REINSTALLATION OF MET. RAILING.	198 L.F.
RESET DIRECTIONAL SIGN	1.
REINFORCED CONCRETE SIDEWALK	260 S.Y.

LAYOUT PLAN

SCALE: 1"=10'-0"

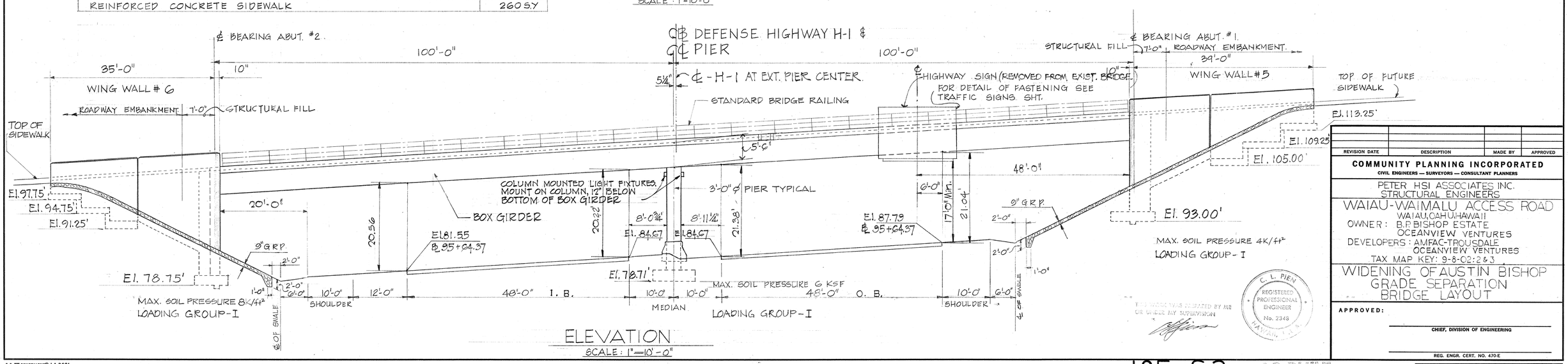

ELEVATION

SCALE: 1"=10'-0"

DATE: 9-18-'70

REVISION DATE	DESCRIPTION	MADE BY	APPROVED

COMMUNITY PLANNING INCORPORATED
CIVIL ENGINEERS — SURVEYORS — CONSULTANT PLANNERS

PETER HSI ASSOCIATES INC.
STRUCTURAL ENGINEERS

WAIAU-WAIMALU ACCESS ROAD
WAIAU, OAHU, HAWAII
OWNER: B.P. BISHOP ESTATE
OCEANVIEW VENTURES
DEVELOPERS: AMFAC-TROUSDALE
OCEANVIEW VENTURES
TAX MAP KEY: 9-8-02:2 & 3

WIDENING OF AUSTIN BISHOP GRADE SEPARATION BRIDGE LAYOUT

APPROVED:

CHIEF, DIVISION OF ENGINEERING

REG. ENGR. CERT. NO. 470-E

THIS WORK WAS PREPARED BY ME OR UNDER MY SUPERVISION

C. L. PIEN
REGISTERED PROFESSIONAL ENGINEER
No. 2348
HAWAII, U.S.A.

185-S2

AS BUILT

SHEET 1 OF 14 SHEETS

FILE	POCKET	FOLDER	NO.

K+E CHYSTALENE® LA 3681 TRACING PAPER

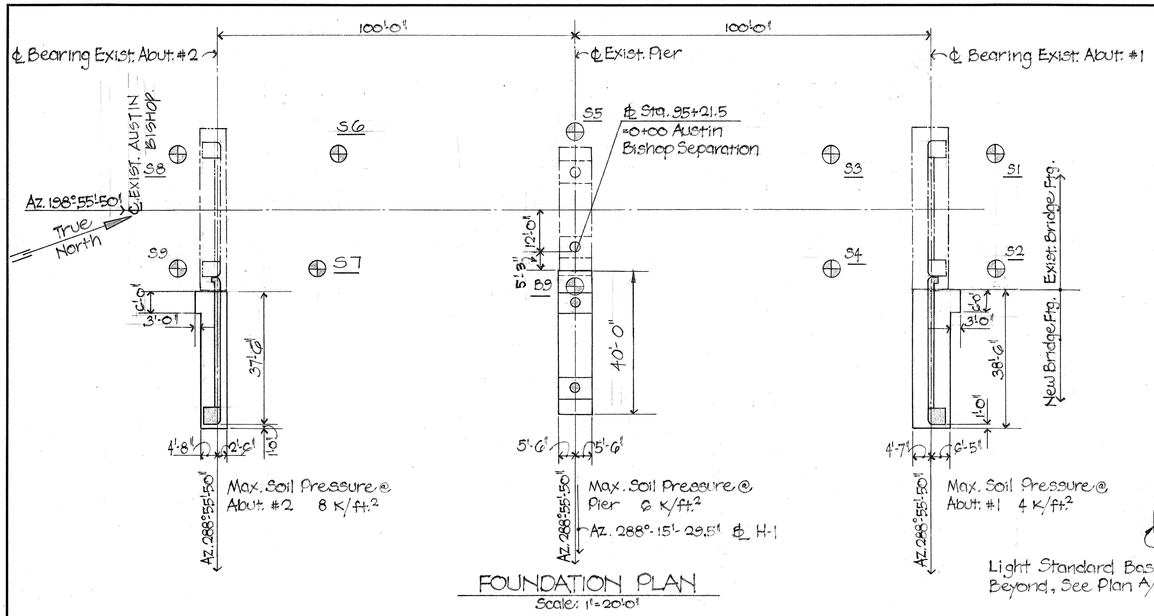

FOUNDATION PLAN

Scale: 1"=20'-0"

NOTE:

The Orientation, Dimensions & Elevations Of The Exist. Bridge Shall Be Verified By Contractor In Field. If There Is Any Discrepancy, Notify The Engineer Immediately.

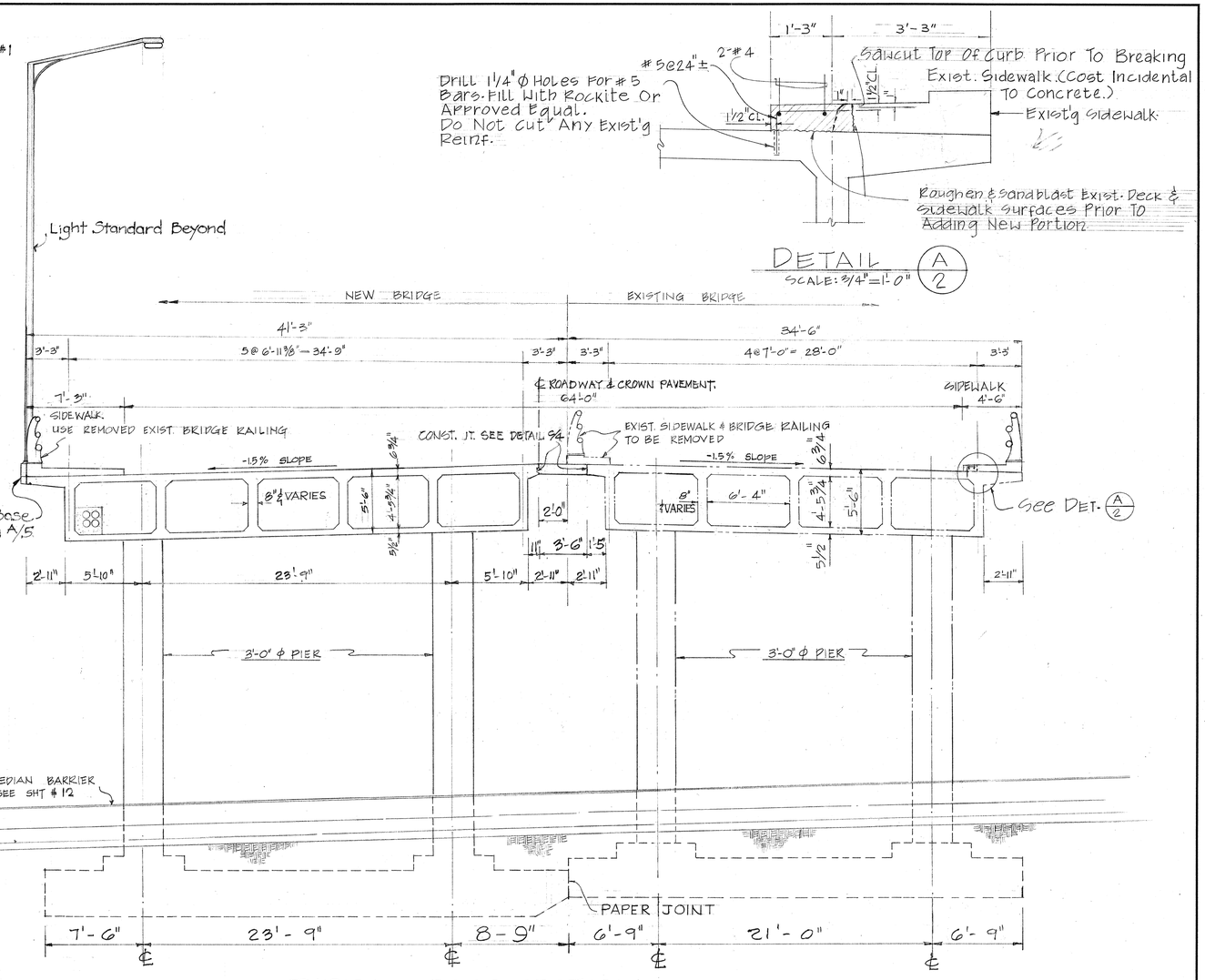

TYPICAL CROSS SECTION

SCALE: 1"=5'-0"

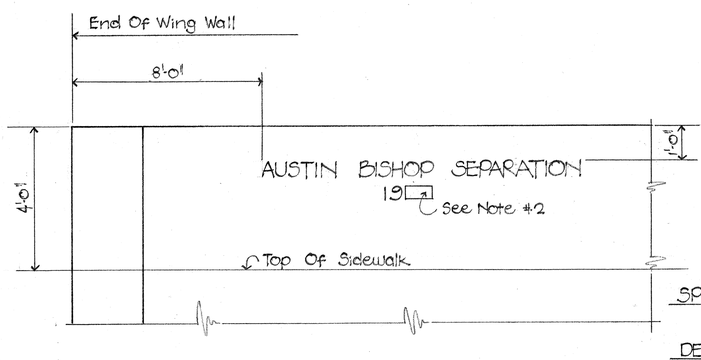

NOTE

1. Place Name Of Structure As Shown. For Location See Sht. #1
2. Year Shown Will Be Year Structure Is Completed.
3. Letter Size & Detail - See Std. Details Sht. #81

TYPICAL BRIDGE NAME & YEAR LOCATION

AT WING WALL #5

GENERAL NOTES

SPECIFICATIONS: AASHO

Standard Specifications For Highway Bridges (9th edition) With Subsequent Additions And Modifications.

DESIGN LOADS: HS 20-44

DESIGN STRESSES:

	A Concrete	E Concrete
	f'c = 3,000 psi	5,000 psi
	fc = 1,200 psi	2,000 psi
	n = 10	6
	fs = 20,000 psi	24,000 psi

MATERIALS

1. All Concrete Shall Be Class A Unless Otherwise Noted On Plans
2. All Reinforced Steel To Be ASTM Designation A-15 Billet Steel, Intermediate Grade Except Otherwise Noted.

CONSTRUCTION METHODS

1. Sides Of Footing Shall Be Excavated & Poured To Neat Lines. For Excavation Of Bottom Of Footings See Standard Specifications. Over Excavation Beyond Neat Lines For Sides Of Footings & The Excavations Indicated On The Plans For The Bottom Of Footings Shall Be Backfilled With A Minimum Of Class "D" Concrete At The Contractors Expense And As Directed By The Engineer.
2. Backfill Behind Abutments Shall Not Be Placed Until Release Of Superstructure False Work. Backfill Behind Abutments Shall Be Brought Up Simultaneously So As To Prevent Unbalanced Earth Pressure.
3. Vertical Pier Column Bars Shall Be Arranged In Such A Manner As To Miss Pier Cap Reinforcing Above.
4. Top Of Concrete Deck Of Structure Shall Be Constructed To Follow The Finish Roadway Grades.

CAMBER

1. Obtain Camber By Forming & Shoring Concrete Surfaces Above Profile Grades As Shown in Camber Diagram, Sht. #4

REFERENCE

1. Refer To Standard Detail Drawings Shts. 3-1 & 3-9

C. L. PIEN
REGISTERED PROFESSIONAL ENGINEER
No. 2348
HAWAII, U.S.A.

THIS WORK WAS PREPARED BY ME OR UNDER MY SUPERVISION

REVISION DATE	DESCRIPTION	MADE BY	APPROVED

COMMUNITY PLANNING INCORPORATED
CIVIL ENGINEERS — SURVEYORS — CONSULTANT PLANNERS

PETER HSI ASSOCIATES INC.
STRUCTURAL ENGINEERS

WAIAU - WAIMALU ACCESS ROAD
WAIAU, OAHU, HAWAII
OWNER : B.P. BISHOP ESTATE
OCEANVIEW VENTURES
DEVELOPERS : AMFAC - TROUSDALE
OCEANVIEW VENTURES
TAX MAP KEY: 9-8-02: 2 & 3

WIDENING OF AUSTIN BISHOP GRADE SEPARATION
CROSS SECTION & FOUNDATION PLAN

APPROVED:

CHIEF, DIVISION OF ENGINEERING

REG. ENGR. CERT. NO. 470-E

FILE	POCKET	FOLDER	NO.

185-S3

AS BUILT

SHEET 2 OF 14 SHEETS

DATE: 9-18-70

K+E CRYSTALENE® LA 3681 TRACING PAPER

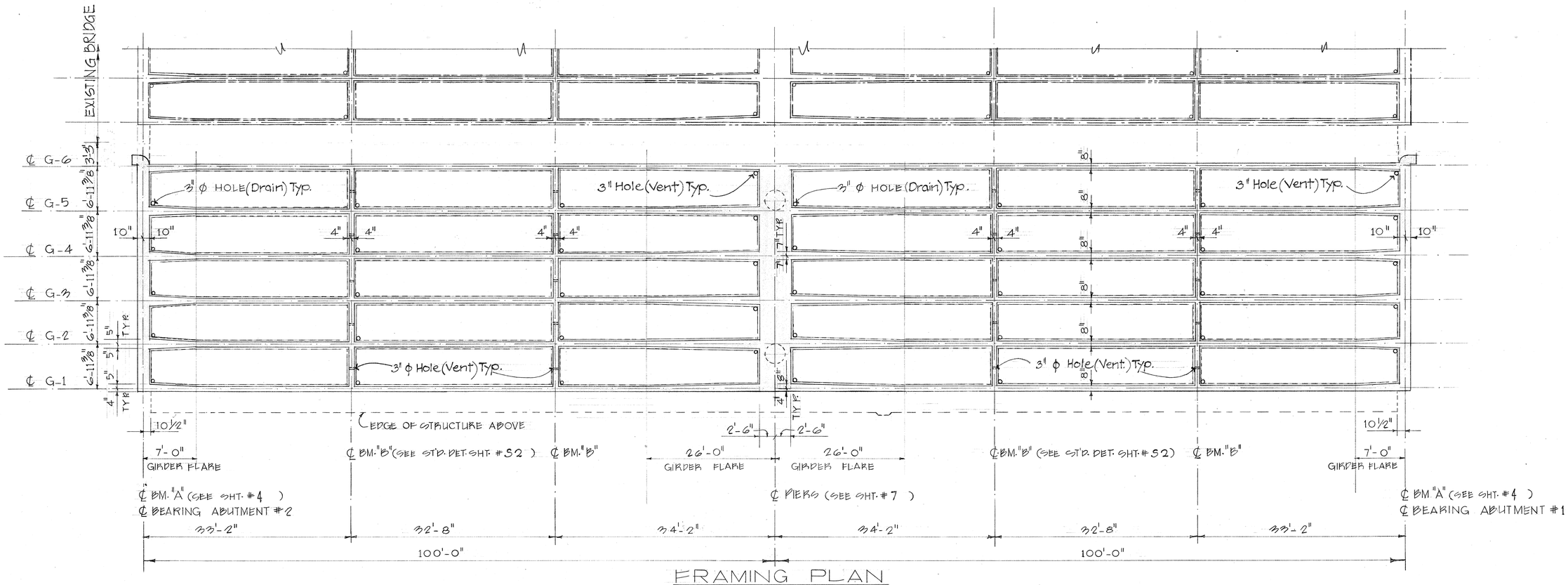

FRAMING PLAN

SCALE: 1/8" = 1'-0"

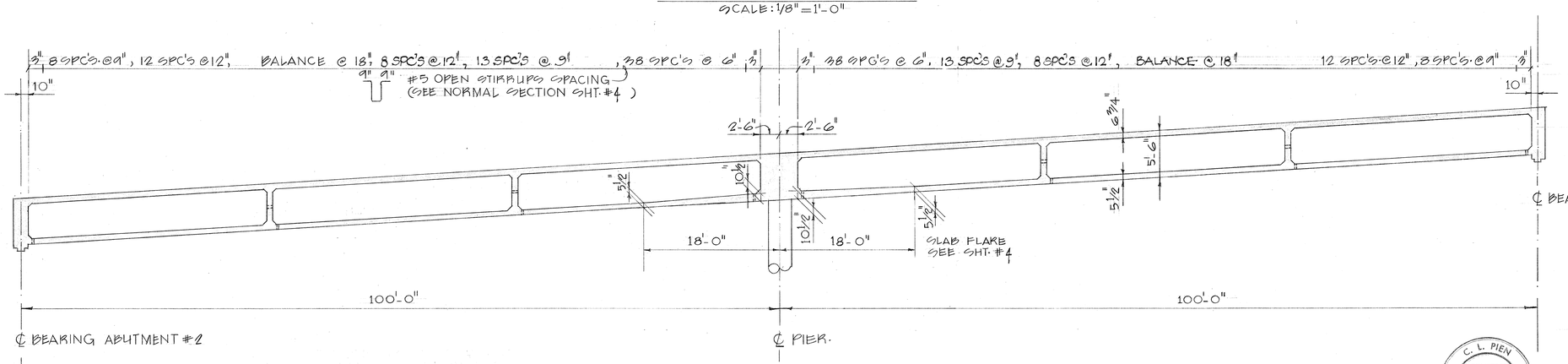

LONGITUDINAL SECTION

SCALE: 1/8" = 1'-0"

DATE: 9-18-'70

C. L. PIEN
REGISTERED PROFESSIONAL ENGINEER
No. 2348
HAWAII, U.S.A.

THIS WORK WAS PREPARED BY ME OR UNDER MY SUPERVISION

REVISION DATE	DESCRIPTION	MADE BY	APPROVED

COMMUNITY PLANNING INCORPORATED
CIVIL ENGINEERS — SURVEYORS — CONSULTANT PLANNERS

PETER HSI ASSOCIATES INC.
STRUCTURAL ENGINEERS

WAIAU-WAIMALU ACCESS ROAD
WAIAU, OAHU, HAWAII
OWNER: B. P. BISHOP ESTATE
OCEANVIEW VENTURES
DEVELOPERS: AMFAC-TROUSDALE
OCEANVIEW VENTURES
TAX MAP KEY: 9-8-02: 2 & 3

WIDENING OF AUSTIN BISHOP GRADE SEPARATION
FRAMING PLAN & LONGIT. SECTION

APPROVED:

CHIEF, DIVISION OF ENGINEERING

REG. ENGR. CERT. NO. 470-E

185-S4

AS BUILT

SHEET 3 OF 14 SHEETS

FILE	POCKET	FOLDER	NO.

K+E CRYSTALENE® LA 3681 TRACING PAPER

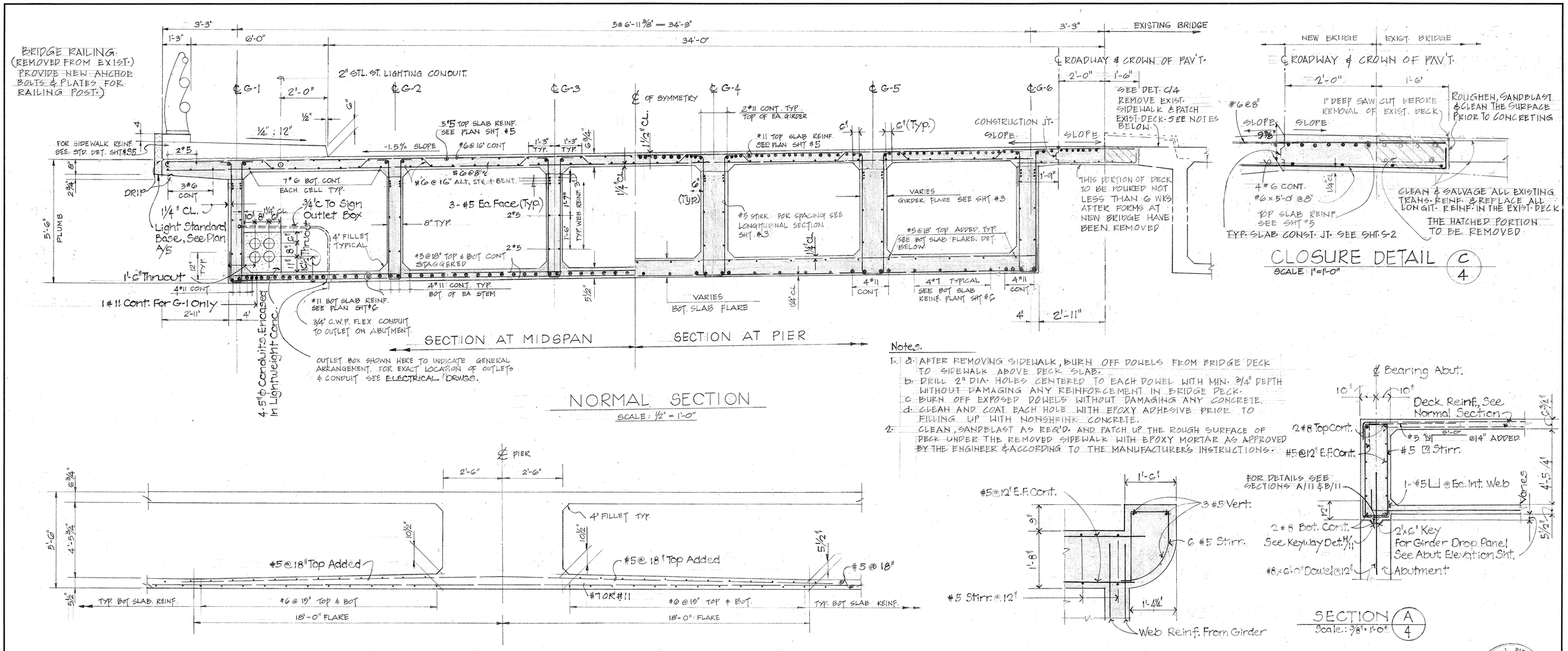

Notes.

1. a. AFTER REMOVING SIDEWALK, BURN OFF DOWELS FROM BRIDGE DECK TO SIDEWALK ABOVE DECK SLAB.
   b. DRILL 2" DIA. HOLES CENTERED TO EACH DOWEL WITH MIN. 3/4" DEPTH WITHOUT DAMAGING ANY REINFORCEMENT IN BRIDGE DECK.
   c. BURN OFF EXPOSED DOWELS WITHOUT DAMAGING ANY CONCRETE.
   d. CLEAN AND COAT EACH HOLE WITH EPOXY ADHESIVE PRIOR TO FILLING UP WITH NONSHRINK CONCRETE.
2. CLEAN, SANDBLAST AS REQ'D. AND PATCH UP THE ROUGH SURFACE OF DECK UNDER THE REMOVED SIDEWALK WITH EPOXY MORTAR AS APPROVED BY THE ENGINEER & ACCORDING TO THE MANUFACTURER'S INSTRUCTIONS.

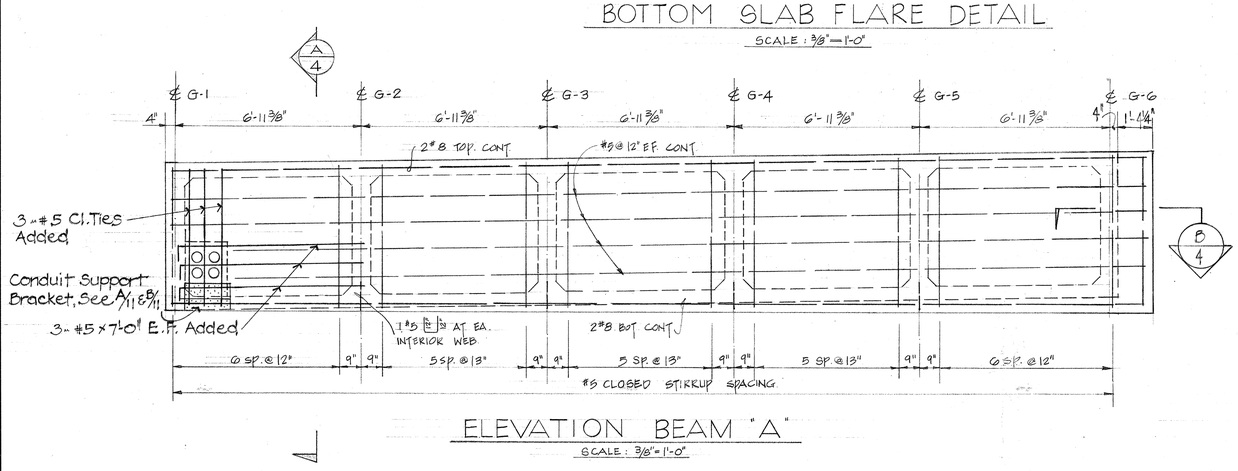

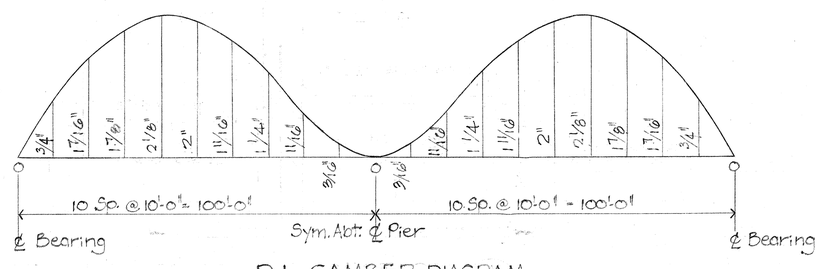

C. L. PIEN
REGISTERED PROFESSIONAL ENGINEER
No. 2348
HAWAII, U.S.A.

THIS WORK WAS PREPARED BY ME OR UNDER MY SUPERVISION

REVISION DATE	DESCRIPTION	MADE BY	APPROVED

COMMUNITY PLANNING INCORPORATED
CIVIL ENGINEERS — SURVEYORS — CONSULTANT PLANNERS

PETER HSI ASSOCIATES INC.
STRUCTURAL ENGINEERS

WAIAU-WAIMALU ACCESS ROAD
WAIAU, OAHU, HAWAII
OWNER: B.P. BISHOP ESTATE
OCEANVIEW VENTURES
DEVELOPERS: AMFAC-TROUSDALE
OCEANVIEW VENTURES
TAX MAP KEY: 9-8-02: 2 & 3

WIDENING OF AUSTIN BISHOP GRADE SEPARATION
NORMAL DECK SECTION & DETS.

APPROVED:

CHIEF, DIVISION OF ENGINEERING

REG. ENGR. CERT. NO. 470-E

FILE	POCKET	FOLDER	NO.

185-S5 AS BUILT

SHEET 4 OF 14 SHEETS

DATE: 9-18-'70

K+E CRYSTALENE® LA 3681 TRACING PAPER

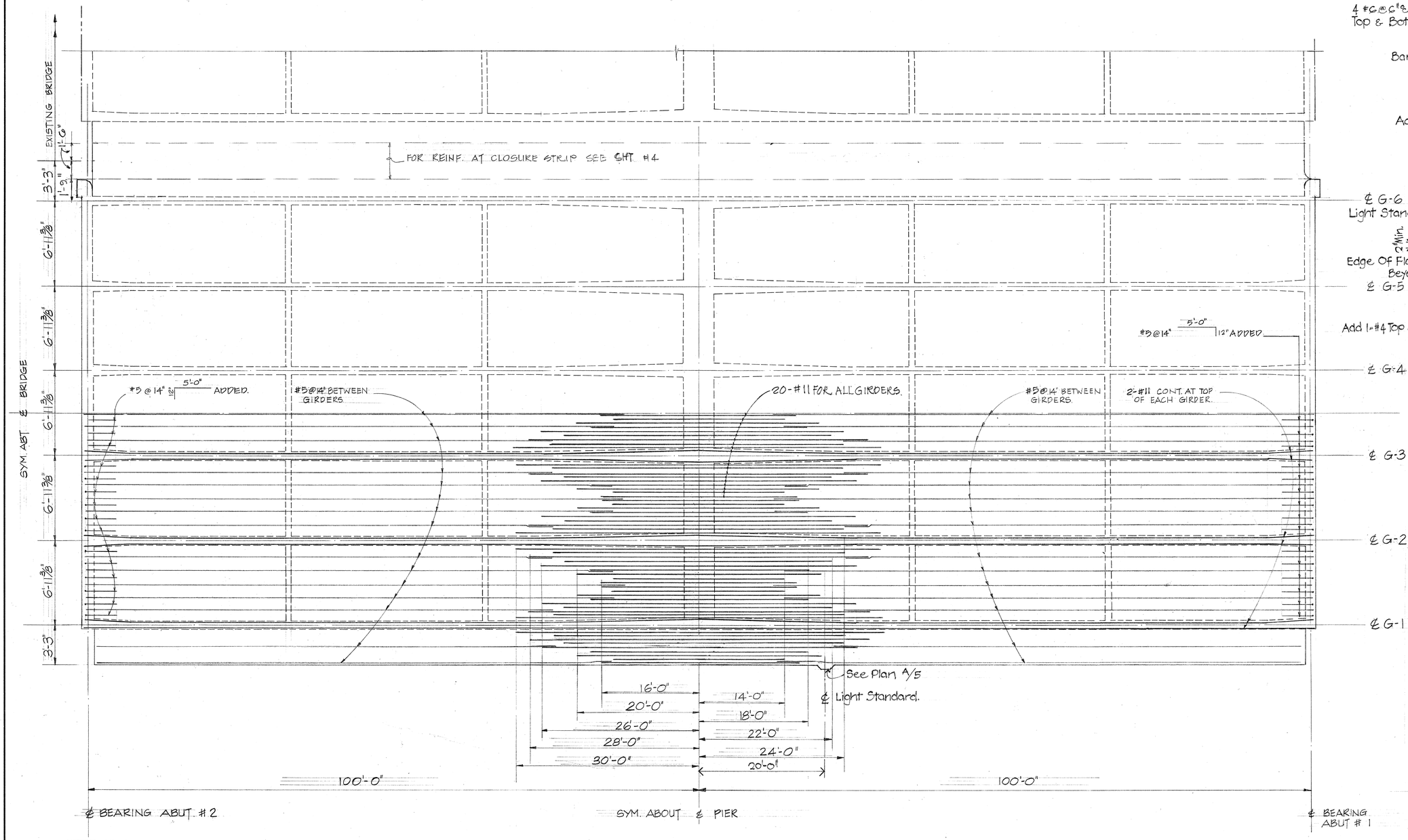

NOTE:
EXCEPT AS OTHERWISE NOTED ALL SLAB BARS SHALL BE OF #11.
ALL #5 BARS SHALL BE LAPPED 2'-0" WITH THE ADJACENT #11 BARS.
BEND & PLACE ALL LONGITUDINAL BARS ALONG HORIZONTAL PLAN.

TOP SLAB REINFORCING PLAN

SCALE: HORIZ.: 1/8"=1'-0"
VERT.: 1/4"=1'-0"

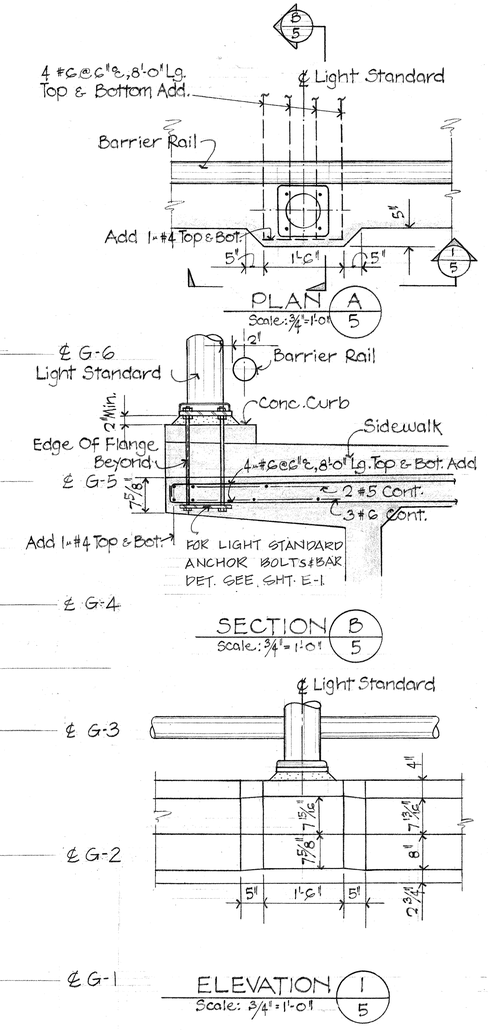

REVISION DATE	DESCRIPTION	MADE BY	APPROVED

COMMUNITY PLANNING INCORPORATED
CIVIL ENGINEERS — SURVEYORS — CONSULTANT PLANNERS

PETER HSI ASSOCIATES INC.
STRUCTURAL ENGINEERS

WAIAU-WAIMALU ACCESS ROAD
WAIAU, OAHU, HAWAII
OWNER: B.P. BISHOP ESTATE
OCEANVIEW VENTURES
DEVELOPERS: AMFAC-TROUSDALE
OCEANVIEW VENTURES
TAX MAP KEY: 9-8-02: 2&3

WIDENING OF AUSTIN BISHOP GRADE SEPARATION
TOP SLAB REINFORCING PLAN

APPROVED:

CHIEF, DIVISION OF ENGINEERING

REG. ENGR. CERT. NO. 470-E

THIS WORK WAS PREPARED BY ME OR UNDER MY SUPERVISION

C. L. PIEN
REGISTERED PROFESSIONAL ENGINEER
No. 2348
HAWAII, U.S.A.

DATE: 9-18-70

K+E CRYSTALENE® LA 3681 TRACING PAPER

185-S6 AS BUILT

SHEET 5 OF 14 SHEETS

FILE	POCKET	FOLDER	NO.

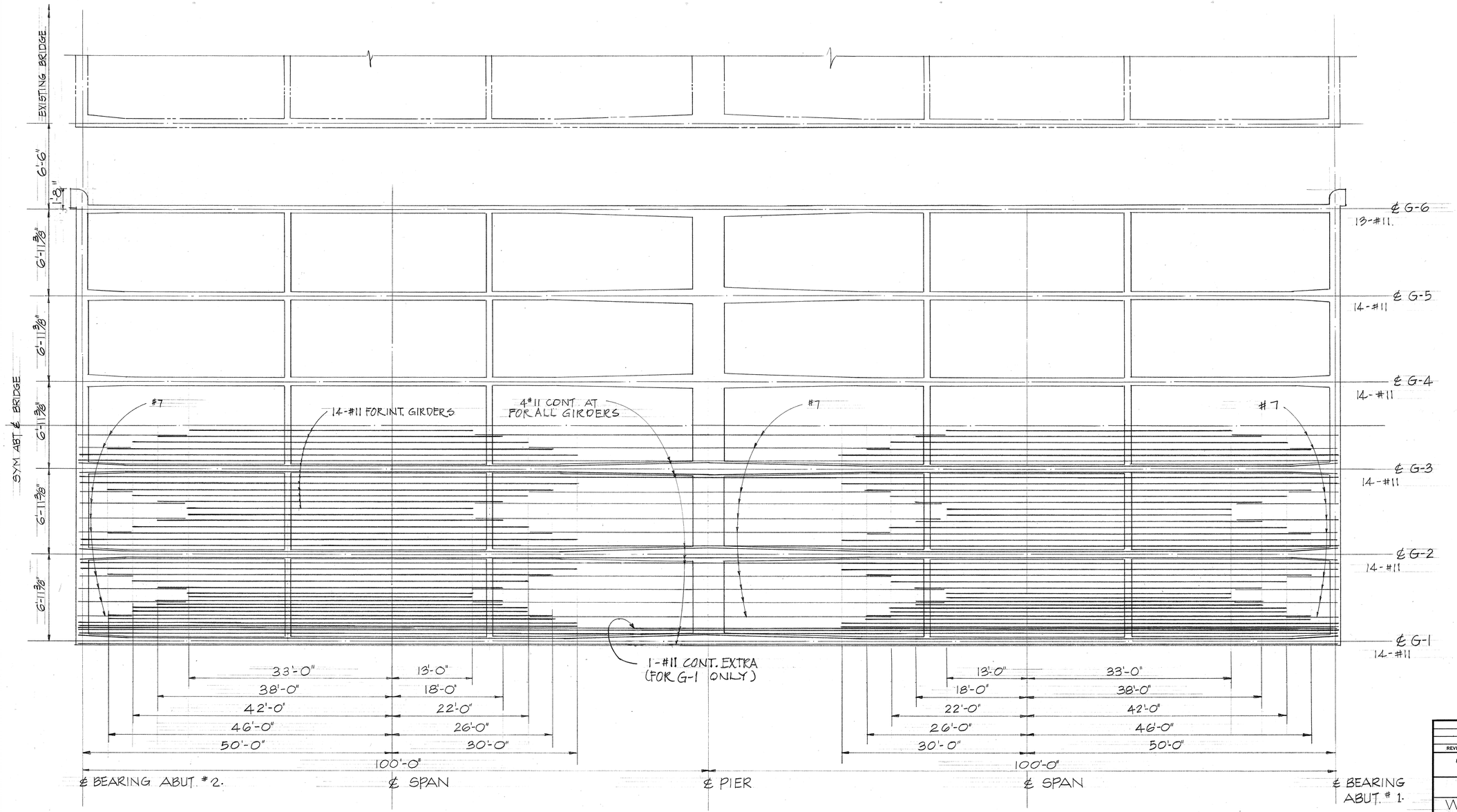

NOTE:
EXCEPT AS OTHERWISE NOTED ALL SLAB BARS SHALL BE OF #11. ALL #7 BARS SHALL BE LAPPED 2'-6" WITH ADJACENT #11 BARS. WHEREVER THE CLEARANCE BETWEEN MAIN REINFORCING BARS LESS THAN MIN. ALLOWABLE CLEARANCES BUNDLED BARS IN GROUP SHALL BE USED.

BOTTOM SLAB REINFORCING PLAN

SCALE: HORIZ: 1/8" = 1'-0"
VERT: 1/4" = 1'-0"

C. L. PIEN
REGISTERED PROFESSIONAL ENGINEER
No. 2348
HAWAII, U.S.A.

THIS WORK WAS PREPARED BY ME OR UNDER MY SUPERVISION

REVISION DATE	DESCRIPTION	MADE BY	APPROVED

COMMUNITY PLANNING INCORPORATED
CIVIL ENGINEERS — SURVEYORS — CONSULTANT PLANNERS

PETER HSI ASSOCIATES INC.
STRUCTURAL ENGINEERS

WAIAU-WAIMALU ACCESS ROAD
WAIAU, OAHU, HAWAII
OWNER : B. P. BISHOP ESTATE
OCEANVIEW VENTURES
DEVELOPERS : AMFAC-TROUSDALE
OCEANVIEW VENTURES
TAX MAP KEY: 9-8-02:2&3

WIDENING OF AUSTIN BISHOP GRADE SEPARATION
BOTTOM SLAB REINFORCING PLAN

APPROVED:

CHIEF, DIVISION OF ENGINEERING

REG. ENGR. CERT. NO. 470-E

DATE = 9-18-'70

K+E CRYSTALENE® LA 3681 TRACING PAPER

185-S7 AS BUILT

SHEET 6 OF 14 SHEETS

FILE	POCKET	FOLDER	NO.

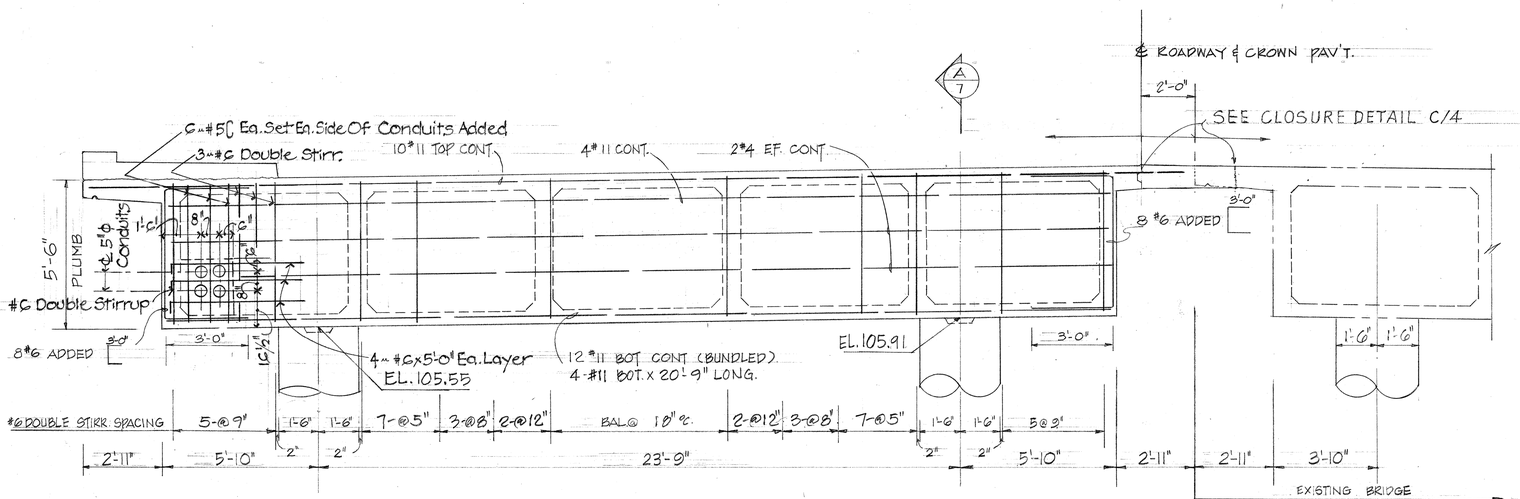

PIER CAP REINFORCING

SCALE: 3/8" = 1'-0"

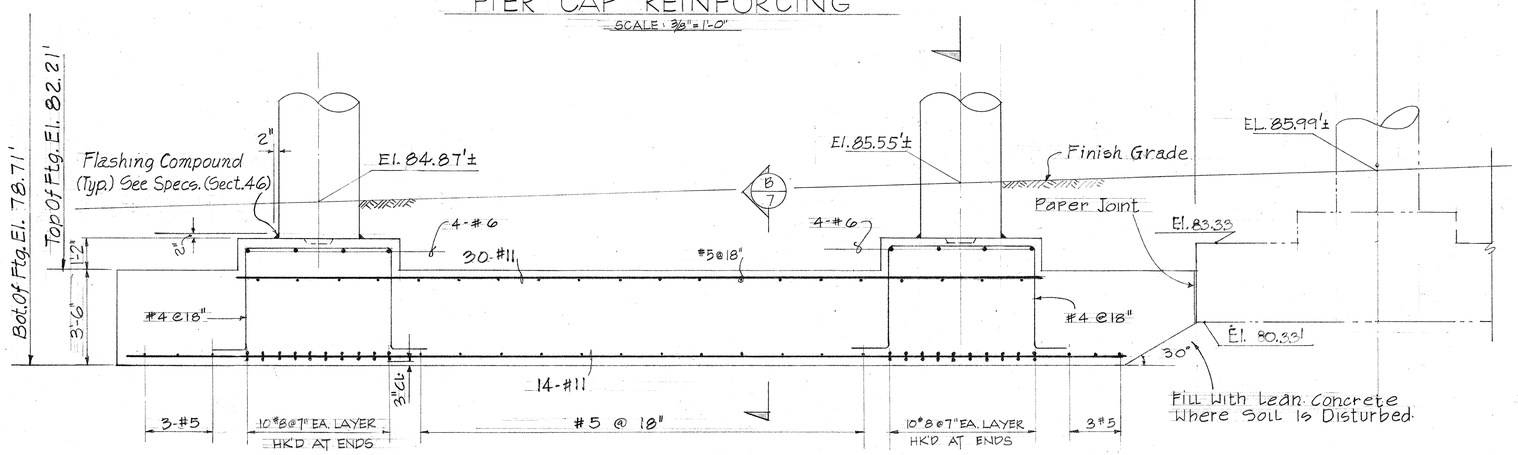

ELEVATION ~ PIER & FOOTING

SCALE: 3/8" = 1'-0"

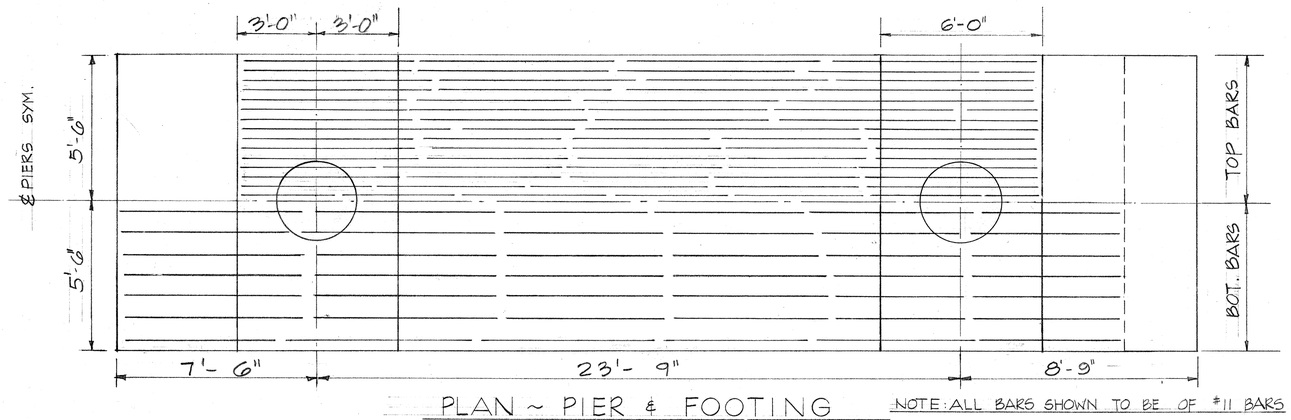

PLAN ~ PIER & FOOTING

SCALE: 3/8" = 1'-0"

NOTE: ALL BARS SHOWN TO BE OF #11 BARS

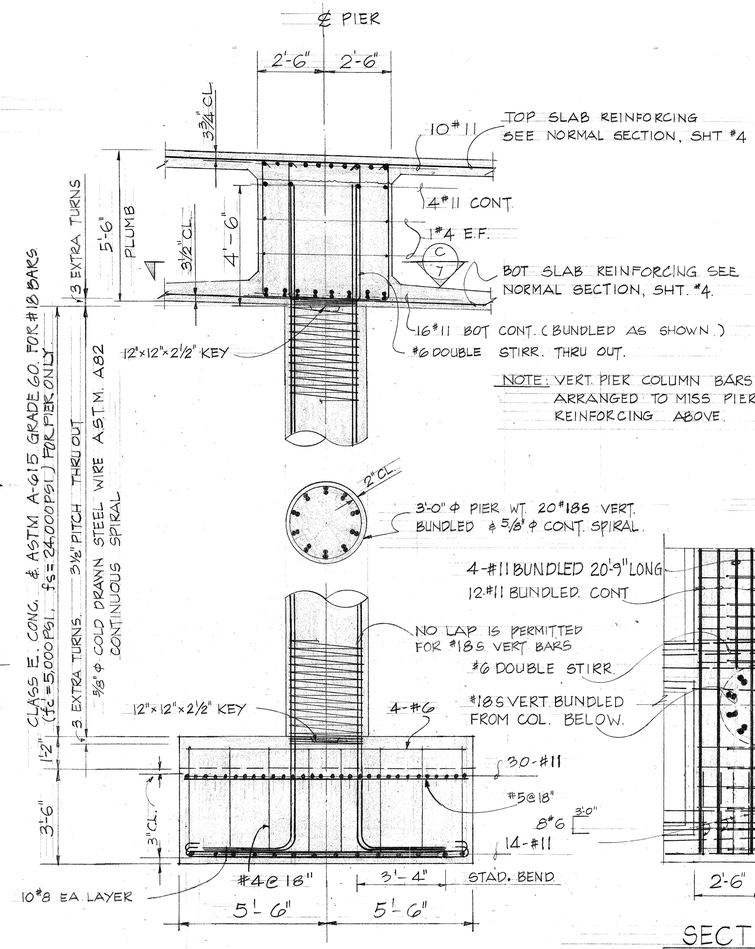

SECTION A/7

SCALE: 3/8" = 1'-0"

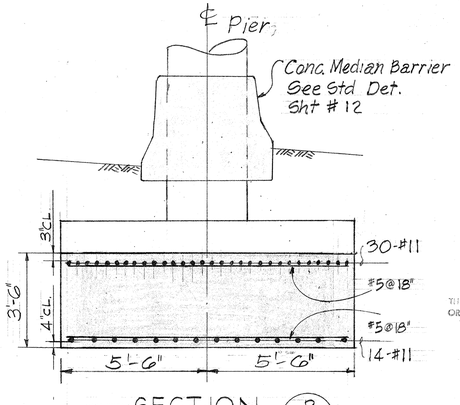

SECTION B/7

SCALE: 3/8" = 1'-0"

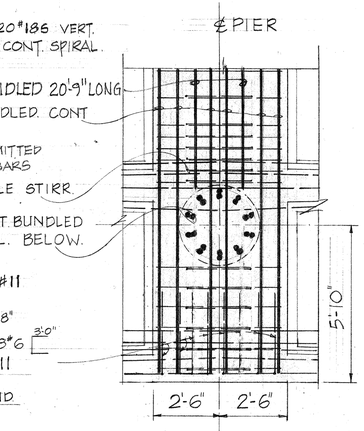

SECTION C/7

SCALE: 3/8" = 1'-0"

C. L. PIEN REGISTERED PROFESSIONAL ENGINEER No. 2348 HAWAII, U.S.A.

THIS WORK WAS PREPARED BY ME OR UNDER MY SUPERVISION

REVISION DATE	DESCRIPTION	MADE BY	APPROVED

COMMUNITY PLANNING INCORPORATED
CIVIL ENGINEERS — SURVEYORS — CONSULTANT PLANNERS

PETER HSI ASSOCIATES INC.
STRUCTURAL ENGINEERS

WAIAU - WAIMALU ACCESS ROAD
WAIAU, OAHU, HAWAII
OWNER: B. P. BISHOP ESTATE
OCEANVIEW VENTURES
DEVELOPERS: AMFAC-TROUSDALE
OCEANVIEW VENTURES
TAX MAP KEY: 9-8-02: 2 & 3

WIDENING OF AUSTIN BISHOP GRADE SEPARATION
PIER CAP & PIER FOOTING REINF.

APPROVED:

CHIEF, DIVISION OF ENGINEERING

REG. ENGR. CERT. NO. 470-E

FILE	POCKET	FOLDER	NO.

SHEET 7 OF 14 SHEETS

185-S8 AS BUILT

DATE: 9-18-70

K+E CRYSTALENE® LA 3681 TRACING PAPER

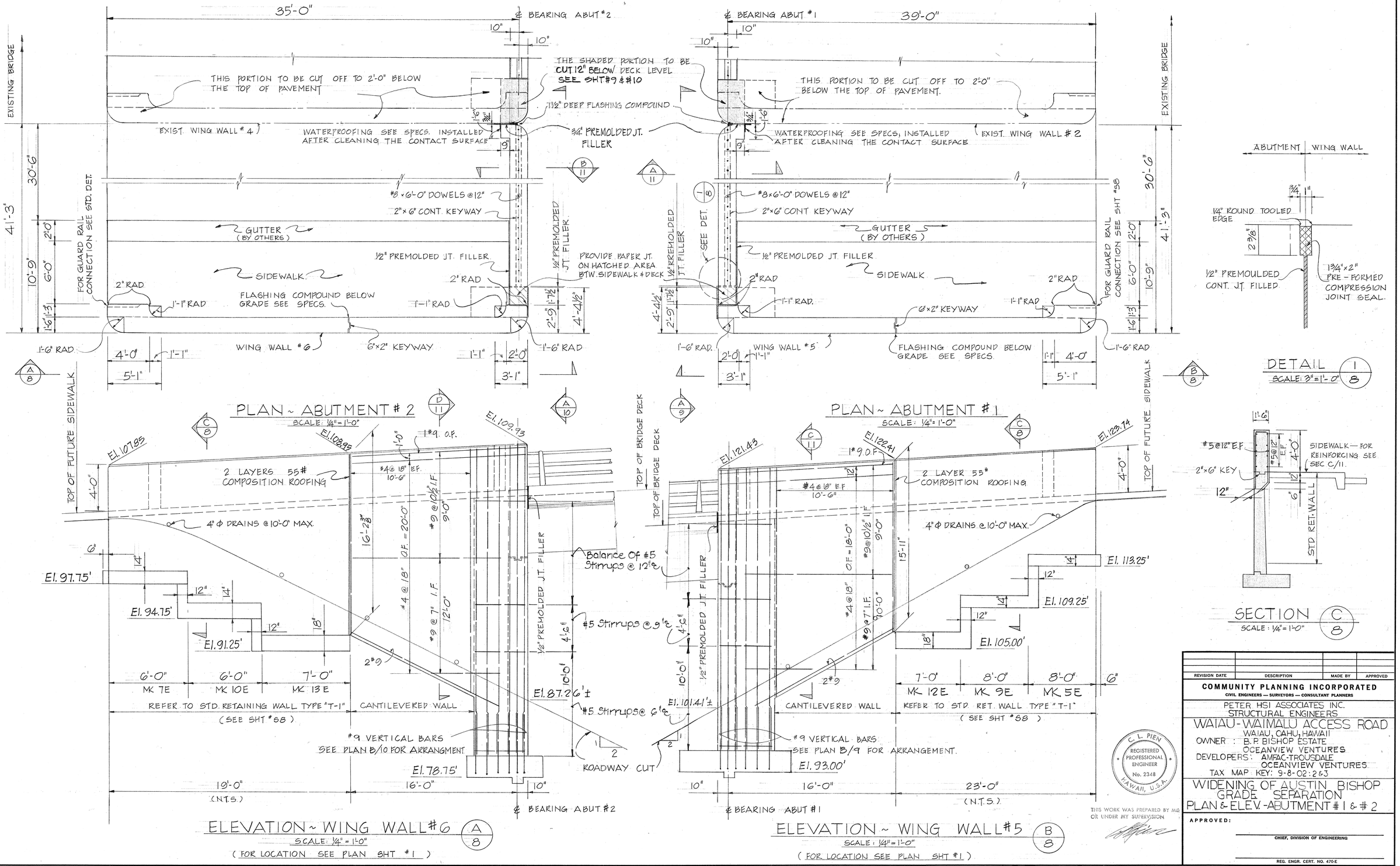

REVISION DATE	DESCRIPTION	MADE BY	APPROVED

COMMUNITY PLANNING INCORPORATED
CIVIL ENGINEERS — SURVEYORS — CONSULTANT PLANNERS

PETER HSI ASSOCIATES INC.
STRUCTURAL ENGINEERS

WAIAU-WAIMALU ACCESS ROAD
WAIAU, OAHU, HAWAII
OWNER : B. P. BISHOP ESTATE
OCEANVIEW VENTURES
DEVELOPERS: AMFAC-TROUSDALE
OCEANVIEW VENTURES
TAX MAP KEY: 9-8-02:2&3

WIDENING OF AUSTIN BISHOP GRADE SEPARATION
PLAN & ELEV. - ABUTMENT # 1 & # 2

C. L. PIEN
REGISTERED PROFESSIONAL ENGINEER
No. 2348
HAWAII, U.S.A.

THIS WORK WAS PREPARED BY ME OR UNDER MY SUPERVISION

APPROVED:

CHIEF, DIVISION OF ENGINEERING

REG. ENGR. CERT. NO. 470-E

FILE	POCKET	FOLDER	NO.

185-S9

AS BUILT

SHEET 8 OF 14 SHEETS

DATE = 9-18-'70

K+E CRYSTALENE® LA 3681 TRACING PAPER

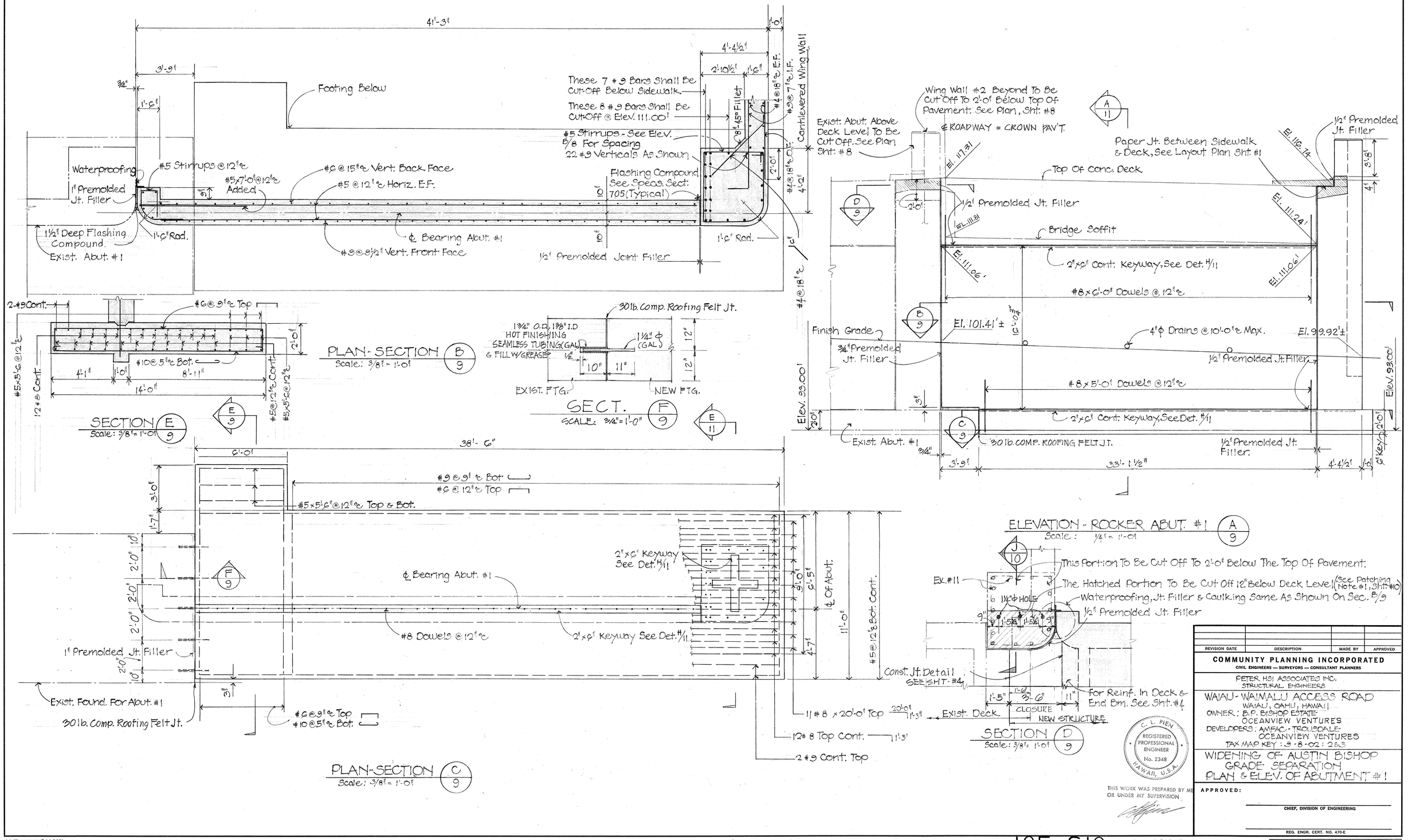
PLAN - SECTION B/9
Scale: 3/8" = 1'-0"
SECTION E/9
Scale: 3/8" = 1'-0"
SECT. F/9
SCALE: 3/4" = 1'-0"
PLAN - SECTION C/9
Scale: 3/8" = 1'-0"
ELEVATION - ROCKER ABUT. #1 A/9
Scale: 1/4" = 1'-0"
SECTION D/9
Scale: 3/8" = 1'-0"
Footing Below
These 7 #9 Bars Shall Be Cut-Off Below Sidewalk.
These 8 #9 Bars Shall Be Cut-Off @ Elev. 111.00'
#5 Stirrups - See Elev. 8/8 For Spacing
22 #9 Verticals As Shown
Cantilevered Wing Wall
Waterproofing
1" Premolded Jt. Filler
#5 Stirrups @ 12" c
#5 @ 15" c Vert. Back Face
#5 @ 12" c Horiz. E.F.
Flashing Compound See Spec. Sect. 705 (Typical)
1½" Deep Flashing Compound.
Exist. Abut. #1
1'-6" Rad.
℄ Bearing Abut. #1
#9 @ 9½" Vert. Front Face
½" Premolded Joint Filler
30 lb. Comp. Roofing Felt Jt.
1¾" O.D. 1⅜" I.D HOT FINISHING SEAMLESS TUBING (GAL) & FILL W/GREASE
1¼" ϕ (GAL)
EXIST. FTG.
NEW FTG.
Wing Wall #2 Beyond To Be Cut Off To 2'-0" Below Top Of Pavement. See Plan, Sht. #8
Exist. Abut. Above Deck Level To Be Cut Off. See Plan Sht. #8
℄ ROADWAY = CROWN PAV'T.
Paper Jt. Between Sidewalk & Deck, See Layout Plan Sht. #1
½" Premolded Jt. Filler
Top Of Conc. Deck
Bridge Soffit
2"x6" Cont. Keyway, See Det. 4/11
#8 x 6'-0" Dowels @ 12" c
Finish Grade
4" ϕ Drains @ 10'-0" c Max.
¾" Premolded Jt. Filler
#8 x 5'-0" Dowels @ 12" c
Exist. Abut. #1
30 lb. COMP. ROOFING FELT JT.
#9 @ 9" c Bot.
#6 @ 12" c Top
#5 x 5'-6" @ 12" c Top & Bot.
2"x6" Keyway See Det. 4/11
℄ Bearing Abut. #1
#8 Dowels @ 12" c
1" Premolded Jt. Filler
Exist. Found. For Abut. #1
30 lb. Comp. Roofing Felt Jt.
#6 @ 9" c Top
#10 @ 5" c Bot.
11 # 8 x 20'-0" Top
12 # 8 Top Cont.
2 # 9 Cont. Top
℄ Of Abut.
#5 @ 12" c Bot. Cont.
This Portion To Be Cut Off To 2'-0" Below The Top Of Pavement.
The Hatched Portion To Be Cut Off 12" Below Deck Level. (See Patching Note #1, Sht. #10)
Waterproofing, Jt. Filler & Caulking Same As Shown On Sec. B/9
1½" Premolded Jt. Filler
Ex. #11
6 1¼" ϕ HOLE
Const. Jt. Detail SEE SHT. #4
Exist. Deck
CLOSURE
NEW STRUCTURE
For Reinf. In Deck & End Bm. See Sht. #4
C. L. PIEN REGISTERED PROFESSIONAL ENGINEER No. 2348 HAWAII, U.S.A.
THIS WORK WAS PREPARED BY ME OR UNDER MY SUPERVISION
REVISION DATE | DESCRIPTION | MADE BY | APPROVED
COMMUNITY PLANNING INCORPORATED
CIVIL ENGINEERS — SURVEYORS — CONSULTANT PLANNERS
PETER HSI ASSOCIATES INC.
STRUCTURAL ENGINEERS
WAIAU - WAIMALU ACCESS ROAD
WAIAU, OAHU, HAWAII
OWNER: B.P. BISHOP ESTATE
OCEANVIEW VENTURES
DEVELOPERS: AMFAC - TROUSDALE - OCEANVIEW VENTURES
TAX MAP KEY: 9-8-02: 2&3
WIDENING OF AUSTIN BISHOP GRADE SEPARATION
PLAN & ELEV. OF ABUTMENT #1
APPROVED:
CHIEF, DIVISION OF ENGINEERING
REG. ENGR. CERT. NO. 470-E
FILE | POCKET | FOLDER | NO.
SHEET 9 OF 14 SHEETS
185-S10 AS BUILT
DATE = 9-18-70
K+E CRYSTALENE® LA 3681 TRACING PAPER

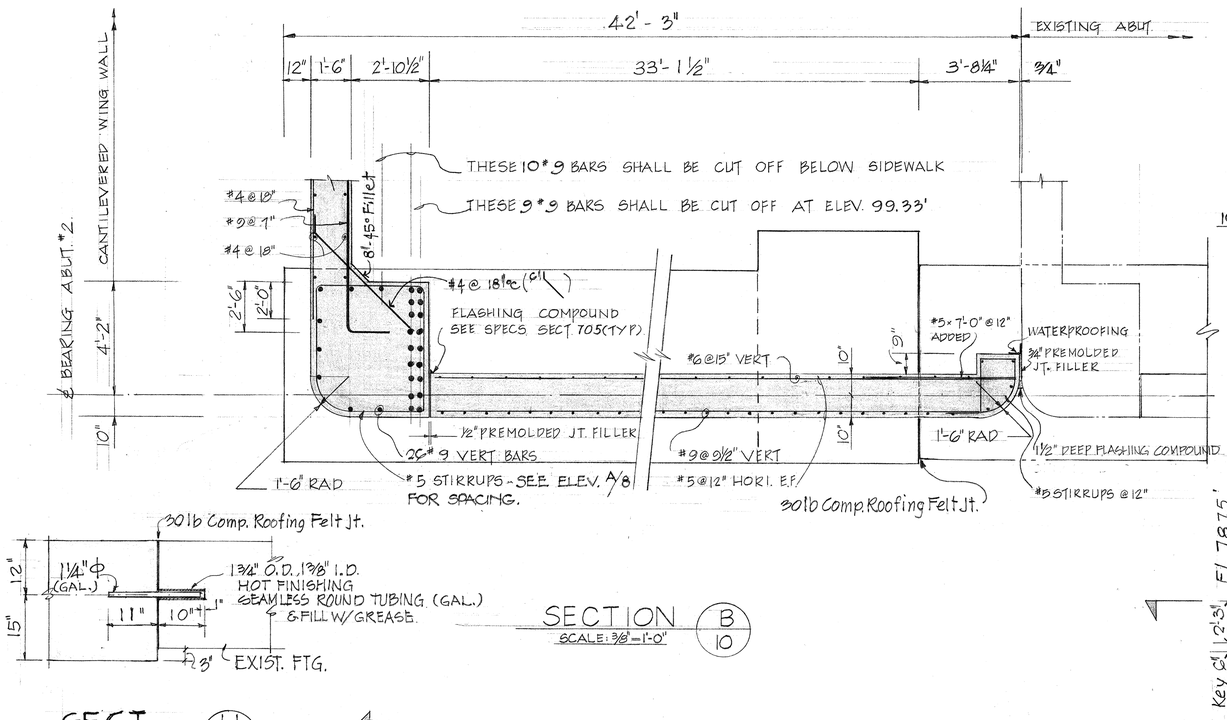

SECTION B/10
SCALE: ⅜" = 1'-0"

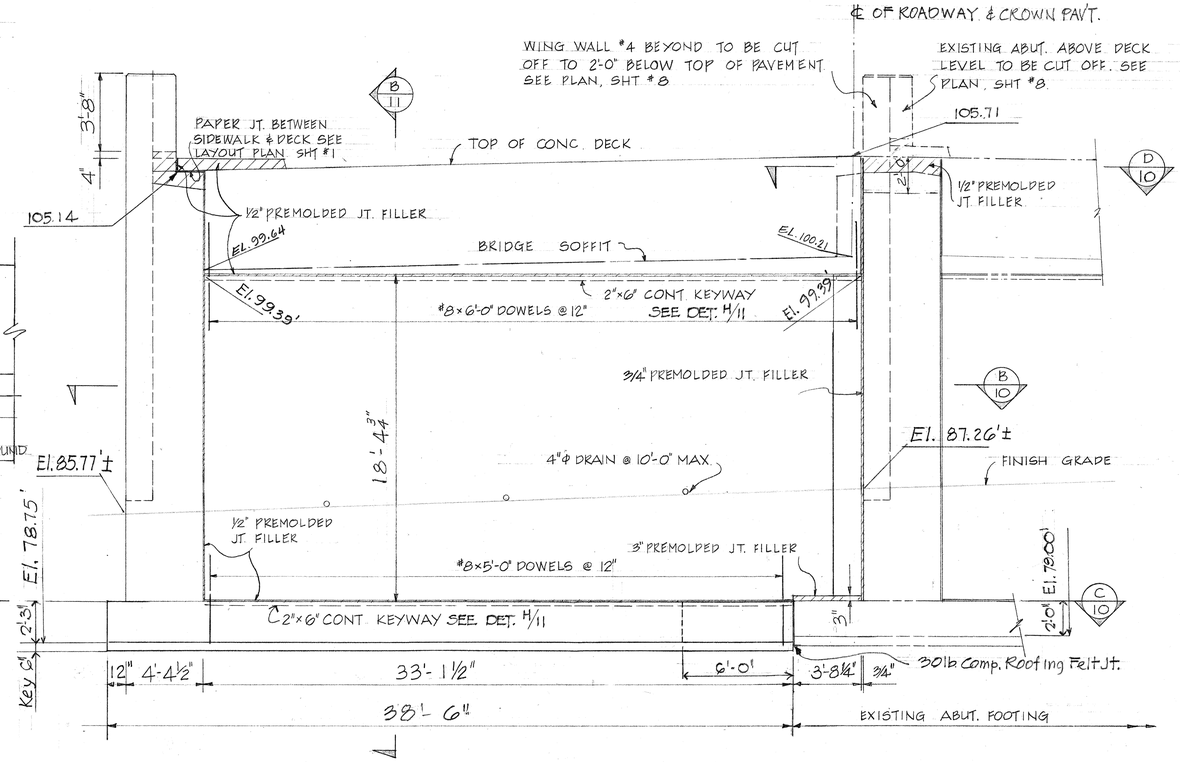

ELEVATION ~ ROCKER ABUT. #2 A/10
SCALE: ¼" = 1'-0"

SECT. H/10
SCALE: ¾" = 1'-0"

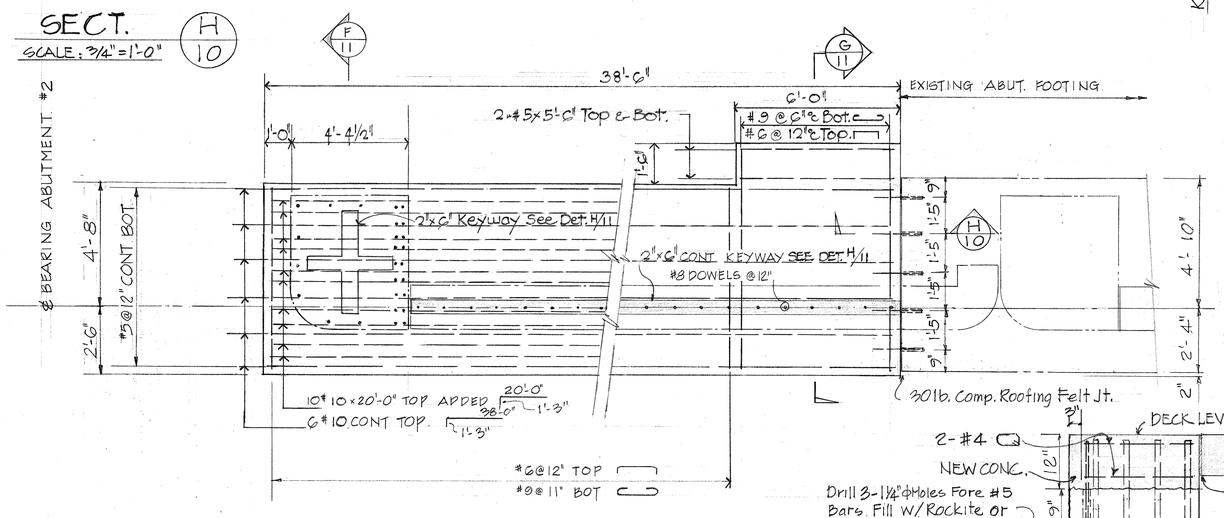

SECTION C/10
SCALE: ⅜" = 1'-0"

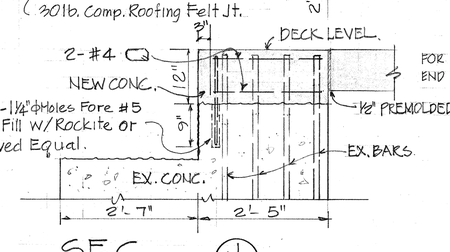

SEC. J/10
SCALE: ¾" = 1'-0"

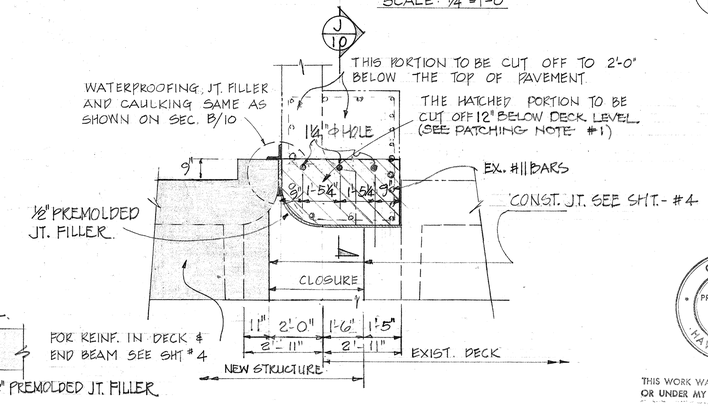

SECTION D/10
SCALE: ⅜" = 1'-0"

Note:
1. After Removal Of Conc. Portion Shown Hatched, Clean Up & Patch Up Rough Surface W/ Epoxy Adhesive & W/ Class-A Conc. & W/ ½" Premolded Filler Bet. Wall & Bridge Deck.

C. L. PIEN
REGISTERED PROFESSIONAL ENGINEER
No. 2348
HAWAII, U.S.A.

THIS WORK WAS PREPARED BY ME OR UNDER MY SUPERVISION

REVISION DATE	DESCRIPTION	MADE BY	APPROVED

COMMUNITY PLANNING INCORPORATED
CIVIL ENGINEERS — SURVEYORS — CONSULTANT PLANNERS

PETER HSI ASSOCIATES INC.
STRUCTURAL ENGINEERS

WAIAU - WAIMALU ACCESS ROAD
WAIAU, OAHU, HAWAII
OWNER: B.P. BISHOP ESTATE-OCEANVIEW VENTURES
DEVELOPERS: AMFAC-TROUSDALE-OCEANVIEW VENTURES
TAX MAP KEY: 9-8-02: 2 & 3

WIDENING OF AUSTIN BISHOP GRADE SEPARATION
PLAN & ELEV. OF ABUTMENT #2

APPROVED:

CHIEF, DIVISION OF ENGINEERING

REG. ENGR. CERT. NO. 470-E

FILE	POCKET	FOLDER	NO.

185-S11 AS BUILT

SHEET 10 OF 14 SHEETS

DATE: 9-18-70

K+E CRYSTALENE® LA 3681 TRACING PAPER

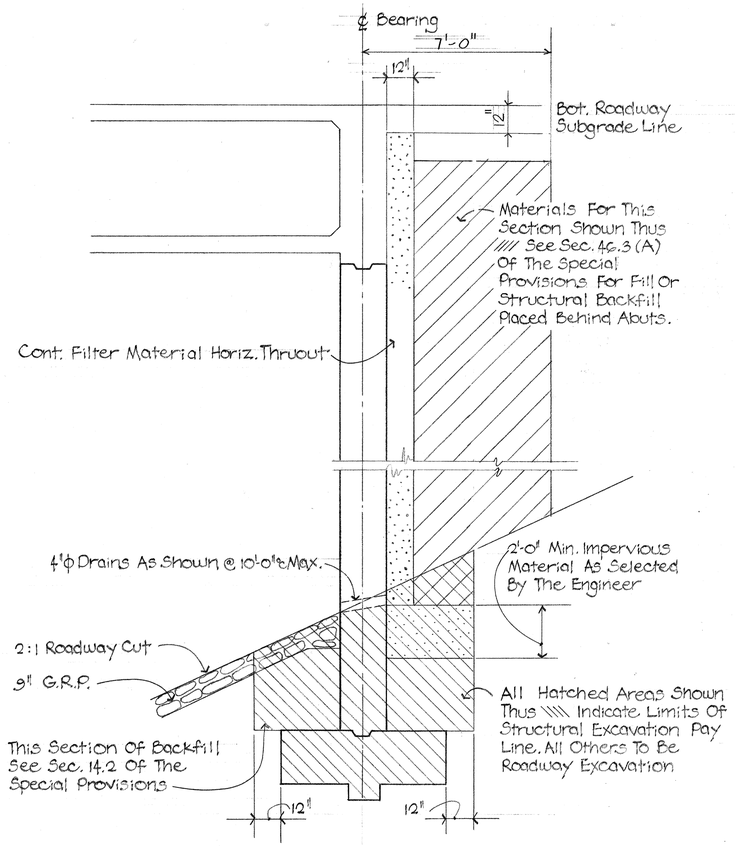

AT ABUTMENTS
STRUCTURAL EXCAVATION PAY LIMITS & BACKFILL DETAIL
Not To Scale.

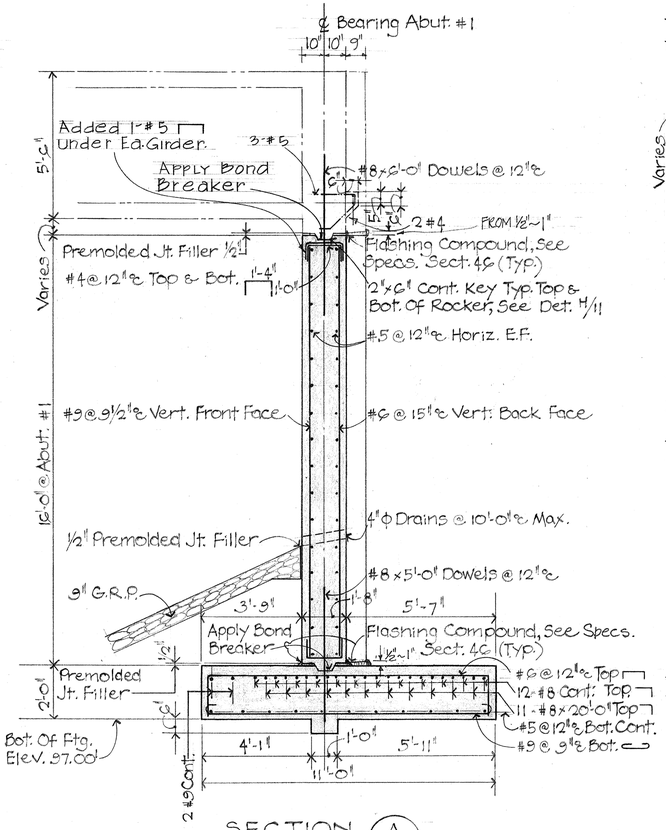

SECTION A / 11
Scale: 3/8" = 1'-0"

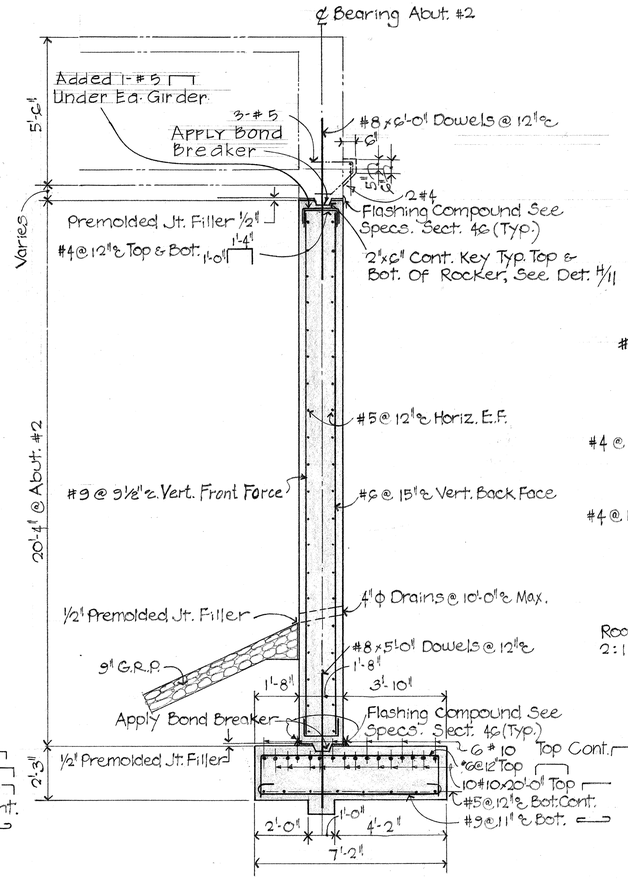

SECTION B / 11
Scale: 3/8" = 1'-0"

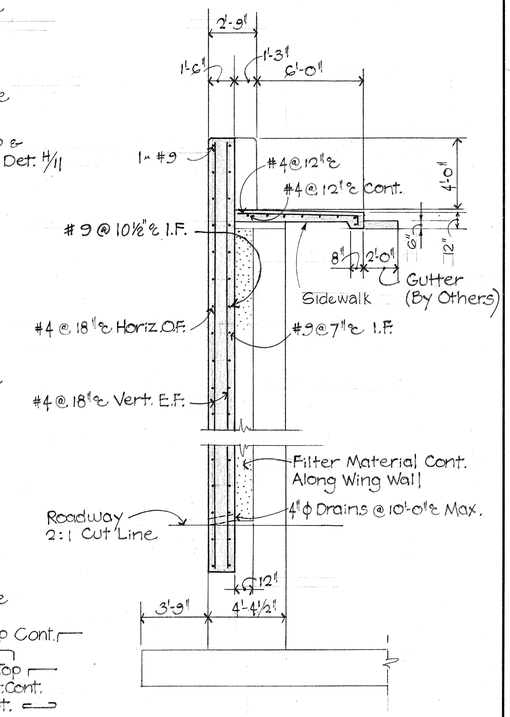

SECTION C / 11
Scale: ¼" = 1'-0"

SECTION D / 11
Opposite Hand

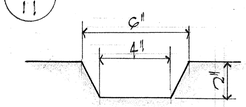

DETAIL OF 2" x 6" KEYWAY H / 11

THIS WORK WAS PREPARED BY ME OR UNDER MY SUPERVISION

C. L. PIEN
REGISTERED PROFESSIONAL ENGINEER
No. 2348
HAWAII, U.S.A.

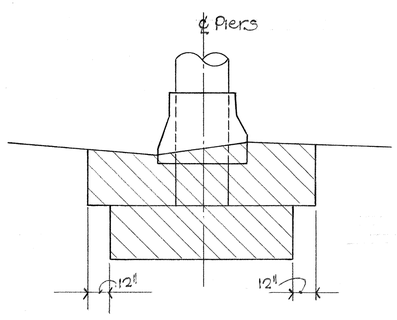

AT PIER FOOTING
STRUCTURAL EXCAVATION PAY LIMITS

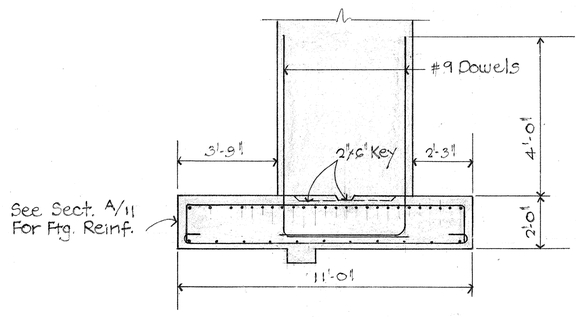

SECTION E / 11
Scale: 3/8" = 1'-0"

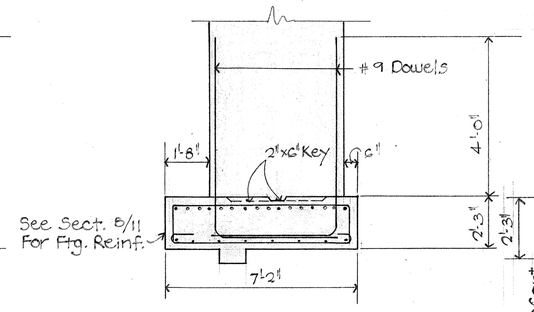

SECTION F / 11
Scale: 3/8" = 1'-0"

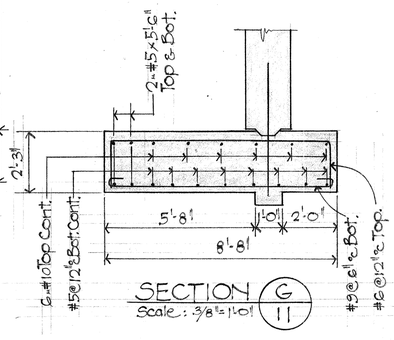

SECTION G / 11
Scale: 3/8" = 1'-0"

REVISION DATE	DESCRIPTION	MADE BY	APPROVED

COMMUNITY PLANNING INCORPORATED
CIVIL ENGINEERS — SURVEYORS — CONSULTANT PLANNERS

PETER HSI ASSOCIATES INC.
STRUCTURAL ENGINEERS

WAIAU-WAIMALU ACCESS ROAD
WAIAU, OAHU, HAWAII
OWNER: B.P. BISHOP ESTATE
OCEANVIEW VENTURES
DEVELOPERS: AMFAC-TROUSDALE
OCEANVIEW VENTURES
TAX MAP KEY: 9-8-02:263

WIDENING OF AUSTIN BISHOP GRADE SEPARATION
ABUTMENT SECTION & DETAILS.

APPROVED:

CHIEF, DIVISION OF ENGINEERING

REG. ENGR. CERT. NO. 470-E

FILE	POCKET	FOLDER	NO.

185-S12 AS BUILT

SHEET 11 OF 14 SHEETS

DATE: 9-18-'70

K+E CRYSTALENE® LA 3691 TRACING PAPER

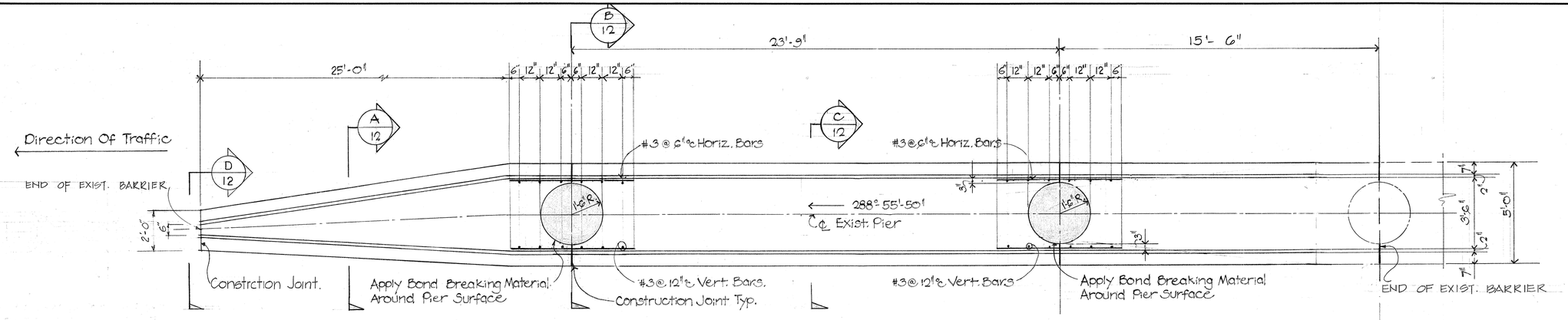

PLAN
Scale: 3/8" = 1'-0"

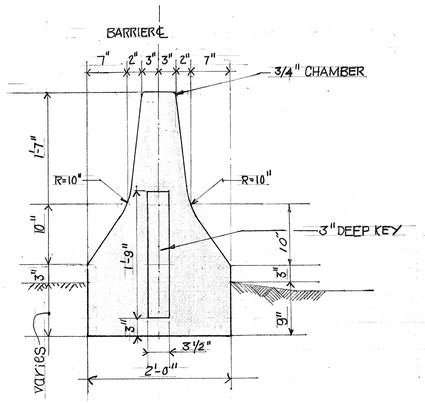

SECTION D/12
SCALE: 1"=1'-0"

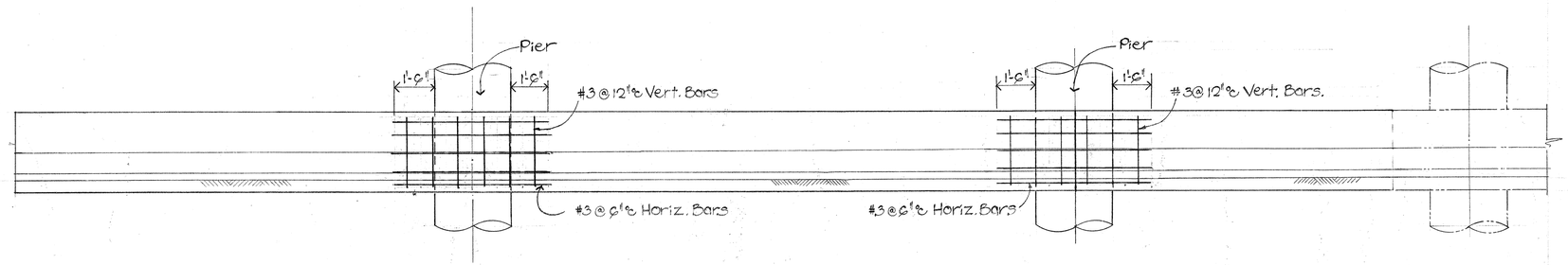

ELEVATION.
Scale: 3/8" = 1'-0"

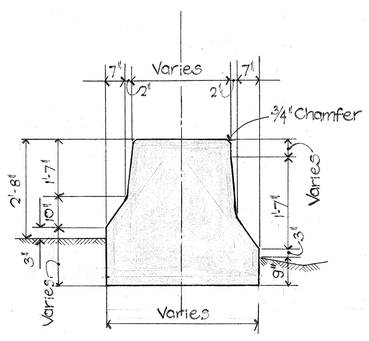

SECTION A/12
Scale: N.T.S.

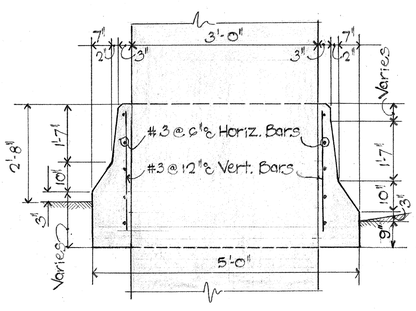

SECTION B/12
Scale: N.T.S.

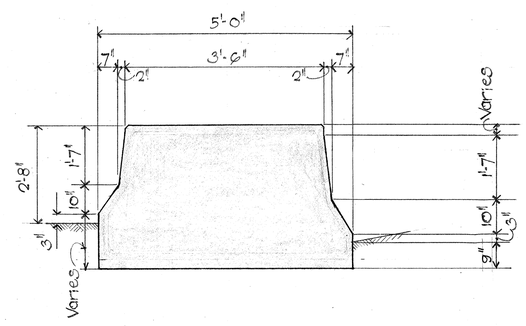

SECTION C/12
Scale: N.T.S.

C. L. PIEN
REGISTERED PROFESSIONAL ENGINEER
No. 2348
HAWAII, U.S.A.

THIS WORK WAS PREPARED BY ME OR UNDER MY SUPERVISION

REVISION DATE	DESCRIPTION	MADE BY	APPROVED

COMMUNITY PLANNING INCORPORATED
CIVIL ENGINEERS — SURVEYORS — CONSULTANT PLANNERS

PETER HSI ASSOCIATES INC.
STRUCTURAL ENGINEERS

WAIAU-WAIMALU ACCESS ROAD
WAIAU, OAHU, HAWAII
OWNER : B. P. BISHOP ESTATE
OCEANVIEW VENTURES
DEVELOPERS: AMFAC-TROUSDALE
OCEANVIEW VENTURES
TAX MAP KEY: 9-8-02: 2&3

WIDENING OF AUSTIN BISHOP GRADE SEPARATION
CONC. MEDIAN BARRIER DETAILS

APPROVED:

CHIEF, DIVISION OF ENGINEERING

REG. ENGR. CERT. NO. 470-E

DATE: 9-18-70

K+E CRYSTALENE® LA 3681 TRACING PAPER

185-S13 AS BUILT

SHEET 12 OF 14 SHEETS

FILE	POCKET	FOLDER	NO.

S-1
STA. 94+93
118' OFFSET LEFT

EL. = 118.53

- Stiff Reddish Brown Silty Clay
- 107.6 — 109.5: Stiff Brown Silty Clay
- Stiff Reddish Brown Silty Clay
- 102.6: Shelby 23 Blows/ft.
- 101.1: Boulder
- Stiff Reddish Brown Silty Clay
- 98.6: Shelby 43 Blows/ft.
- Very Stiff Gray Silty Clay
- 91.6: Very Stiff Reddish Brown Silty Clay
- 88.1 — 87.4: Shelby 109 Blows/ft.
- Highly Weathered Rock.
- Very Stiff Reddish Brown Silty Clay
- 83.6: Very Stiff Gray Silty Clay
- 80.0 — 80.1: Shelby 25 Blows/ft.
- Fractured Slightly Weathered Dense Basalt Rock.

S-2
STA. 95+25
118' OFFSET LEFT

EL. = 115.76

- Very Stiff Reddish Brown Silty Clay
- Shelby 75 Blows/ft.
- Shelby 100 Blows/0.7 ft.
- 97.8: Very Stiff Brown Clay
- 90.4 — 90.8: Shelby 100 Blows/0.4 ft.
- Very Stiff Brown Silty Clay Mottled w/Gray & Red
- 86.7: Stiff Brown Clay
- Very Stiff Reddish Brown Clay
- Shelby 100 Blows/0.5 ft.
- 77.4 — 76.6: Shelby 100 Blows/0.8 ft.
- Highly Weathered Rock.

S-3
STA. 94+93
72' OFFSET LEFT

EL. = 119.54

- Stiff Reddish Brown Silty Clay
- 101.5: Shelby 34 Blows/ft.
- 100.0: Stiff Reddish Brown Silty Clay w/Highly Wea. Rock.
- 95.1: Stiff Brown Silty Clay
- 94.1: Boulder
- 91.5: Stiff Gray Silty Clay
- Shelby 36 Blows/ft.
- Very Stiff Reddish Brown Silty Clay w/Trace of Highly Weathered Rock
- 90.0: Nx 100% Rec.
- 85.5 — 80.5: Very Stiff Brn. Silty Clay w/Trace Of Highly Wea. Rk.
- Nx 70.0% Rec.
- Highly Weathered Fractured Rock.
- 78.0: Nx 66.7% Rec.
- Nx 50.0% Rec.
- Fractured Moderately Wea. Dense Bas. Rk. w/Streaks Of Clayey Sand
- Nx 90.0% Rec.
- Nx 100% Rec.
- Nx 66.2% Rec.
- 72.0: Nx 20.0% Rec.
- Nx 100% Rec.
- Fractured Slightly Wea. Dense Bas. Rk. w/Streaks Of Clayey Sand
- 70.0: Nx 86.7% Rec.
- 69.5: Slightly Weathered Dense Basaltic Rk. Nx 80% Rec.
- 68.3: Fractured Slightly Wea. Dense Basaltic Rock.
- Unweathered Dense Basaltic Rock.
- 66.5: Nx 82.0% Rec.
- 64.5: Fractured Unweathered Dense Basaltic Rock.

S-4
STA. 95+25
72' OFFSET LEFT

EL. = 113.21

- Stiff Reddish Brown Silty Clay
- 105.9: Very Stiff Reddish Brown Silty Clay
- 102.0: Shelby 108 Blows/ft.
- Very Stiff Brown Silty Clay
- 93.1: Shelby 25 Blows/0.1 ft.
- Very Stiff Reddish Brown Clay
- 85.1: Shelby 100 Blows/0.6 ft.
- Very Stiff Reddish Brown Silty Clay
- Shelby 100 Blows/0.8 ft.
- 72.1: Weathered, Fractured Slightly Dense Bas. Rk.
- Nx 100% Rec.
- 67.0: Unweathered, Fractured Dense Basaltic Rk.
- 63.1: Nx 100% Rec.
- 58.1: Unweathered Dense Basaltic Rock.

S-5
℄ STA. 94+93

EL. = 112.85

- Stiff Reddish Brown Silty Clay
- Shelby 39 Blows/ft.
- 95.5: Shelby 100 Blows/0.8 ft.
- Very Stiff Brown Silty Clay
- 87.0: Unweathered Dense Basaltic Rock.
- Nx 100% Rec.
- 79.1: Nx 85.2% Rec.
- 78.5: Very Stiff Reddish Brown Silty Clay
- Nx 74.0% Rec.
- 73.5: Fractured, Moderately Wea. Dense Bas. Rk.
- 69.5: Fractured, Slightly Wea. Dense Bas. Rk.
- Nx 100% Rec.
- Fractured, Slightly Wea. Dense Bas. Rk. Rock w/Streaks of Silty Clay
- 65.5: Nx 82.5% Rec.
- Fractured Moderately Weathered Dense Basaltic Rock w/Streaks of Silty Clay
- 62.7: Nx 100% Rec.

S-6
STA. 94+93
66' OFFSET RIGHT

EL. = 107.45

- Firm Red Silty Clay
- 100.0 — 100.5: Stiff Red Silty Clay
- Shelby 114 Blows/ft.
- 95.0: Very Stiff Red Silty Clay
- 91.2: Very Stiff Brown Silty Clay
- Shelby 100 Blows/ft.
- 86.2: Very Stiff Gray Silty Clay
- Nx 76.0% Rec.
- Highly Weathered Fractured Rock.
- 78.0: Nx 100% Rec.
- 76.2: Moderately Weathered Fractured Rock.
- 73.8: Slightly Weathered Dense Basaltic Rock.
- Nx 80% Rec.
- Highly Wea. Fractured Rock.
- 66.2: Nx 82% Rec.
- Highly Wea. Fractured Rock & Stiff Silty Clay
- 61.2: Nx 74% Rec.
- 60.2: Moderately Weathered Fractured Rock.
- 58.2: Nx 73.3% Rec.
- Slightly Weathered Fractured Rock.
- Unweathered Dense Basaltic Rock.
- 50.0: Nx 100% Rec.
- Nx 100% Rec.

S-7
STA. 95+25
72' OFFSET RIGHT

EL. 105.9

- 103.0: Stiff Red Silty Clay
- Stiff Brown Silty Clay
- 98.1: Shelby 75 Blows/ft.
- Very Stiff Brown Silty Clay
- 90.0: Nx 93.3% Rec.
- 87.0: Unweathered Dense Basaltic Rock.
- Nx 8.0% Rec.
- Highly Weathered Rock.
- Split Spoon 109 Blows/ft.
- 77.0: Nx 65.8% Rec.
- 74.1: Slightly Weathered Basaltic Rock.
- 71.8: Nx 94.6% Rec.
- Highly Weathered Rock.
- 67.0: Nx 74.0% Rec.
- Slightly Weathered Fractured Bas. Rk.
- Nx 88.0% Rec.
- Unweathered Dense Basaltic Rock.
- Nx 78.0% Rec.
- Nx 100% Rec.
- 47.0: Nx 100% Rec.

S-8
STA. 94+93
111' OFFSET RIGHT

EL. = 105.06

- Stiff Reddish Brown Silty Clay
- 100.0: Very Stiff Reddish Brown Silty Clay
- Shelby 39 Blows/ft.
- 88.0: Fractured Mod. Weathered Dense & Vesicular Basaltic Rock.
- 86.0: Nx 85.0% Rec.
- Fractured Mod. & Highly Wea. Dense Bas. Rk.
- Nx 100% Rec.
- 81.0: Fractured Moderately Weathered Vesicular Basaltic Rock.
- Nx 100% Rec.
- 78.0: Slightly Weathered Dense Bas. Rock.
- Nx 6.0% Rec.
- 69.5: Nx 100% Rec.

S-9
STA. 95+25
111' OFFSET RIGHT

EL. = 104.88

- Stiff Red Silty Clay w/Streaks of Brown Silty Clay
- 100.4: Shelby 34 Blows/ft.
- Very Stiff Red Brown Silty Clay
- Shelby 101 Blows/ft.
- 90.8 — 90.0: Unweathered Dense Basaltic Rock.
- Nx 90% Rec.
- Moderately & Highly Wea. Fractured Rk.
- Nx 72% Rec.
- 79.4: Nx 84% Rec.
- Moderately Weathered Fractured Rk.
- Nx 94% Rec.
- 71.0: Moderately Weathered Fractured Rock w/Some Highly Weathered Rock.
- 66.0: Nx 62% Rec.

B-9
STA. 95+25

EL. = 110.1

- Very Stiff Red Silty Clay
- 95.0: Very Stiff Brn. Silty Clay
- Shelby 100 Blows/ft.
- 85.0: Very Stiff Brn. Clay
- 84.0: Unweathered Dense Basaltic Rock.
- Nx 36% Rec.
- Highly Wea. Rk.
- Nx 80% Rec.
- 74.0

EL. 74.0

- Nx 100% Rec.
- Very Stiff Brn. Silty Clay & Gravel
- Split-Spoon 100% Rec. 87 Blows/ft.
- 62.1: Med. Wea. Dense Bas. Boulders & Highly Wea. Rk.
- Nx 22% Rec.
- 51.8: Nx 27.1% Rec.

C. L. PIEN
REGISTERED PROFESSIONAL ENGINEER
No. 2348
HAWAII, U.S.A.

THIS WORK WAS PREPARED BY ME OR UNDER MY SUPERVISION

REVISION DATE	DESCRIPTION	MADE BY	APPROVED

COMMUNITY PLANNING INCORPORATED
CIVIL ENGINEERS — SURVEYORS — CONSULTANT PLANNERS

PETER HSI ASSOCIATES INC.
STRUCTURAL ENGINEERS

WAIAU-WAIMALU ACCESS ROAD
WAIAU, OAHU, HAWAII
OWNER : B. P. BISHOP ESTATE
OCEANVIEW VENTURES
DEVELOPERS : AMFAC-TROUSDALE
OCEANVIEW VENTURES
TAX MAP KEY: 9-8-02 : 2 63

WIDENING OF AUSTIN BISHOP GRADE SEPARATION
BORING LOGS

APPROVED:

CHIEF, DIVISION OF ENGINEERING

REG. ENGR. CERT. NO. 470-E

DATE: 9-18-'70

K+E CRYSTALENE® LA 3681 TRACING PAPER

185-S14 AS BUILT

SHEET 13 OF 14 SHEETS

FILE	POCKET	FOLDER	NO.

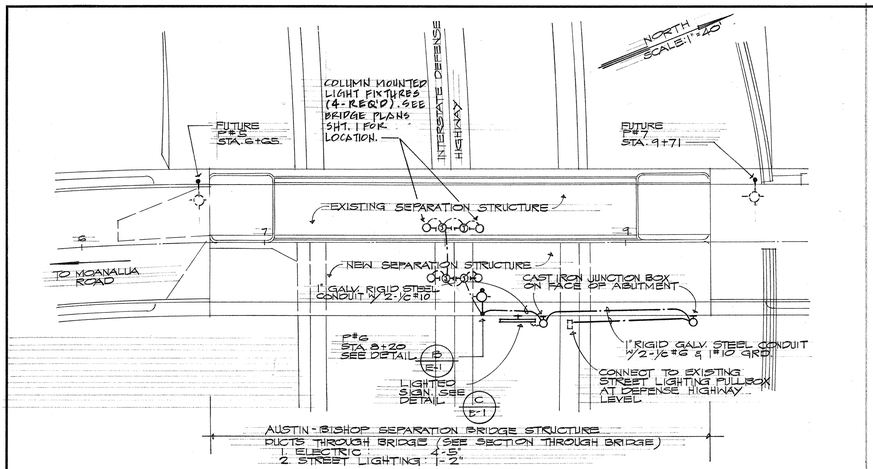

ELECTRICAL PLAN

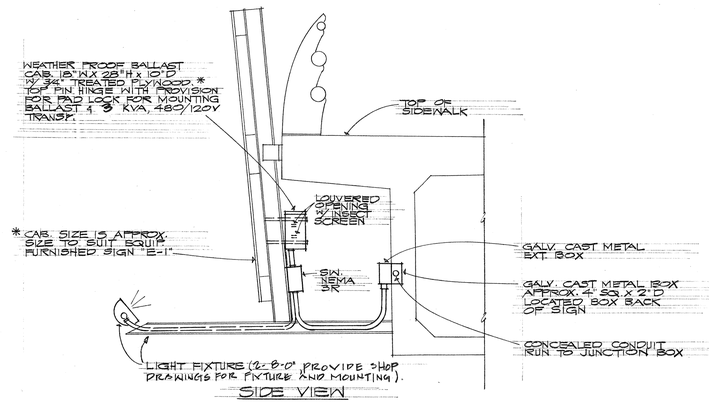

SIDE VIEW

A E-1 SIGN "E-1" BISHOP-AUSTIN SEPARATION
NOT TO SCALE

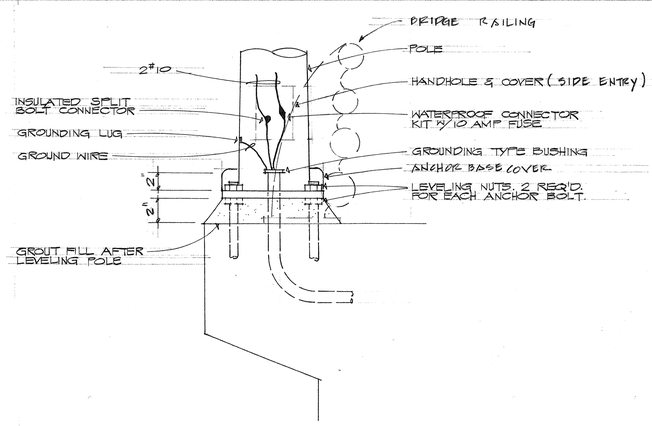

B E-1 ANCHOR BASE DETAIL
NOT TO SCALE

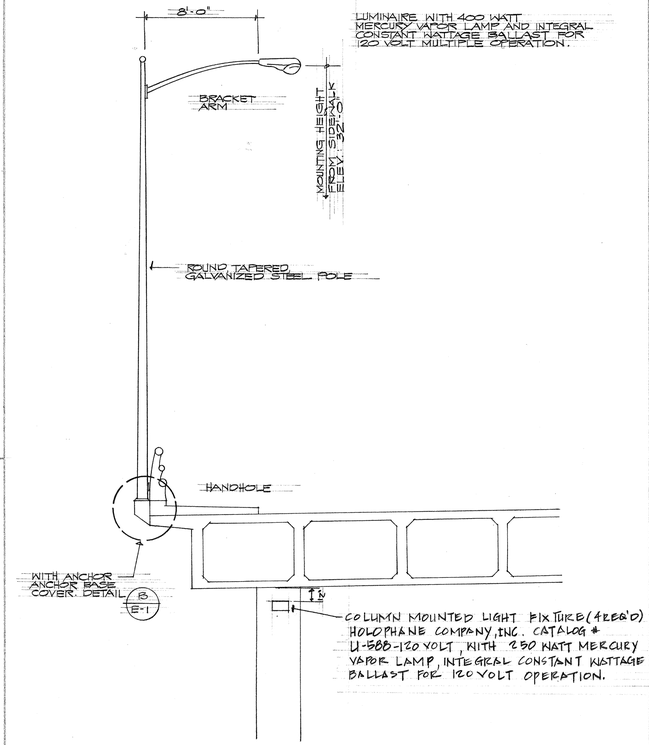

C E-1 STREET LIGHTING STANDARD DETAIL
NOT TO SCALE.

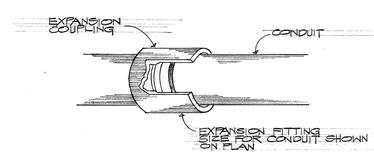

D E-1 EXPANSION COUPLING DETAIL
NOT TO SCALE

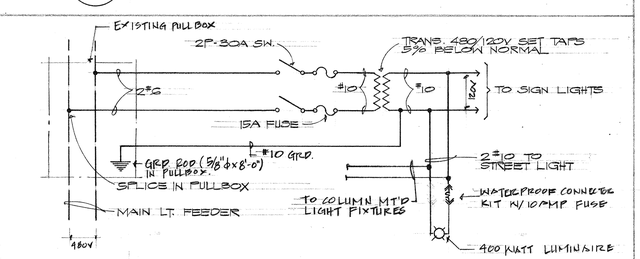

WIRING DIAGRAM FOR SIGN
NOT TO SCALE

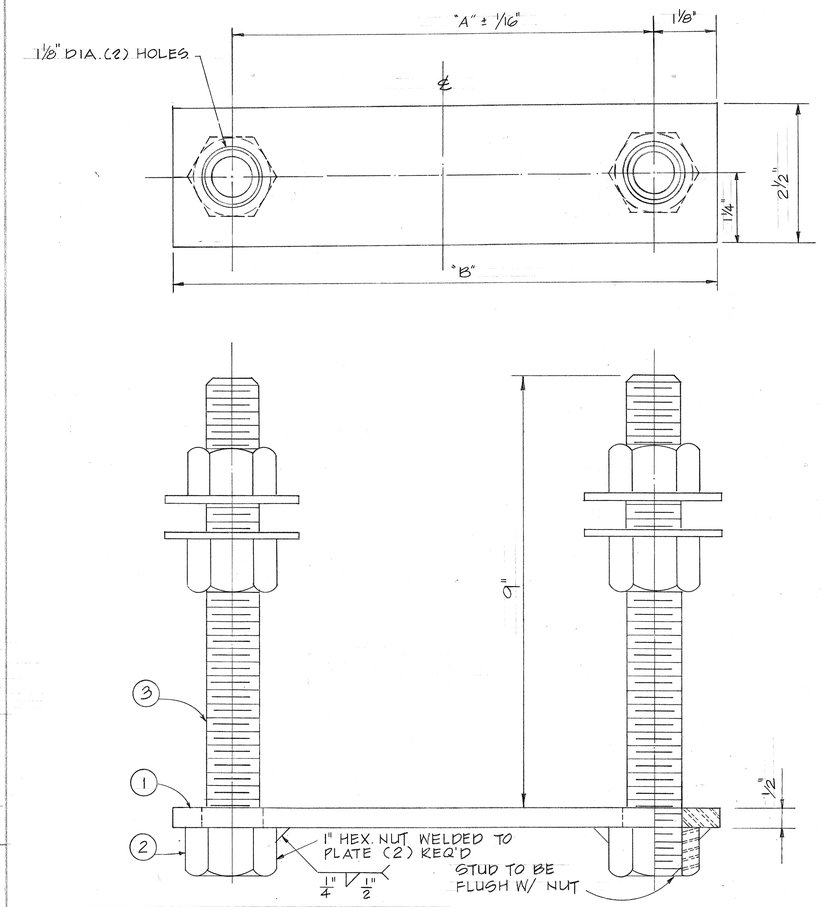

ASSEMBLY PART NO.	"A"	"B"	USED ON
1095-9 1/2"	6 3/4"	9"	9 1/2" D.B.C.
1095-10	7 1/16"	9 3/16"	10" D.B.C.
1095-11	7 3/4"	10"	11" D.B.C.

PART NO.	DESCRIPTION	MATERIAL	NO. REQ'D
	WASHER	STD (FLAT) (GALV.)	4
	HEX. NUT	1" N.C. (GALV.)	4
-3	TH'D. STUD	1" N.C. x 10 1/4" LG (GALV.)	2
-2	HEX. NUT	1" N.C. (GALV.)	2
1095-1	BAR	2 1/2" x 8" x 1/2" H.R.S. (GALV.)	1

FOUNDATION ANCHOR BAR

NOTE: ASSEM. TO BE GALV'D. AFTER FABRICATION.

DETAIL OF LIGHT STANDARD ANCHOR BOLDS & BAR
SCALE: 3/4" = 1'-0"

REVISION DATE	DESCRIPTION	MADE BY	APPROVED

COMMUNITY PLANNING INCORPORATED
CIVIL ENGINEERS — SURVEYORS — CONSULTANT PLANNERS

PETER HSI ASSOCIATES INC.
STRUCTURAL ENGINEERS

WAIAU - WAIMALU ACCESS ROAD
WAIAU, OAHU, HAWAII
OWNER: B.P. BISHOP ESTATE
OCEANVIEW VENTURES
DEVELOPERS: AMFAC - TRDI SCALB
OCEANVIEW VENTURES
TAX MAP KEY: 9-8-02: 2 & 3

WIDENING OF AUSTIN BISHOP GRADE SEPARATION
ELECTRICAL PLAN AND DETAILS

APPROVED:

CHIEF, DIVISION OF ENGINEERING

E-1

REG. ENGR. CERT. NO. 470-E

RICHARD Y. OKIA
REGISTERED PROFESSIONAL ENGINEER
No. 1590
HAWAII, U.S.A.

DESIGN
THIS WORK WAS PREPARED BY ME OR UNDER MY SUPERVISION.

185-S15 AS BUILT

SHEET 14 OF 14 SHEETS

FILE	POCKET	FOLDER	NO.

K+E CRYSTALENE® LA 3681 TRACING PAPER

FED. ROAD DIST. NO.	STATE	FED. AID PROJ. NO.	FISCAL YEAR	SHEET NO.	TOTAL SHEETS
HAWAII	HAW.				

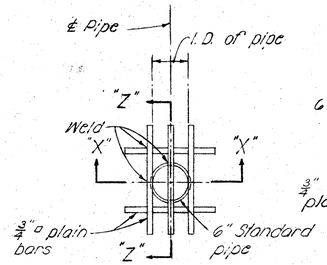

PLAN

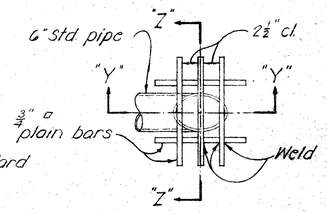

PLAN

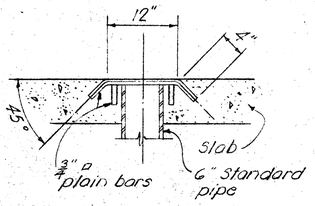

SECTION "Z-Z"

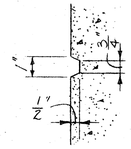

TYPICAL CONCRETE GROOVE DETAIL

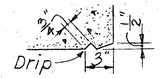

DRIP DETAIL

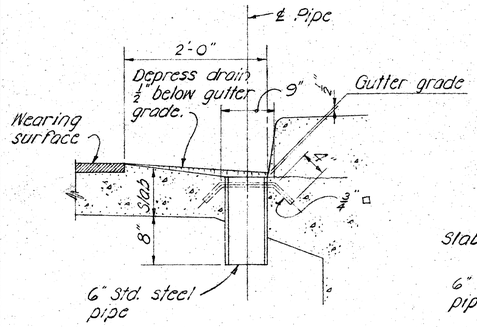

SECTION "X-X"

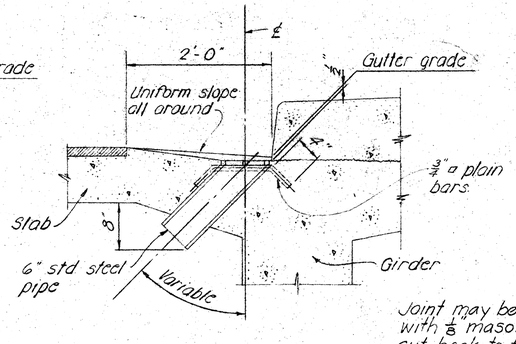

SECTION "Y-Y"

NOTE:

Metal drains shall be considered incidental to Class A Concrete in both concrete and steel bridges and will not be paid for separately.

Assemblage of grillage and pipe shall be hot-dip galvanized after all welding is completed.

TYPICAL DRAINAGE DETAILS

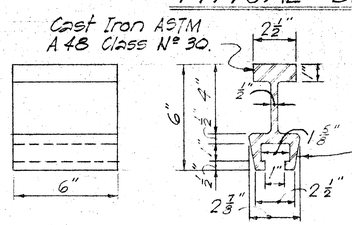

INSERT DETAIL

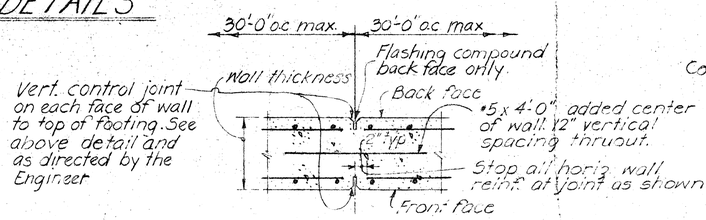

CONTROL JOINT DETAILS

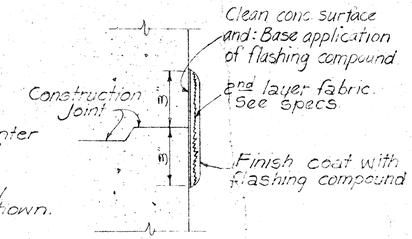

TYP. FLASHING COMPOUND WATERPROOFING DETAIL

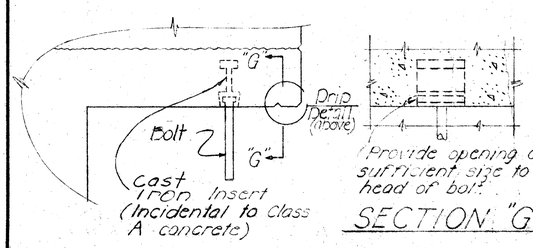

SECTION "G-G"

DETAIL of PIPE HANGERS & INSERTS

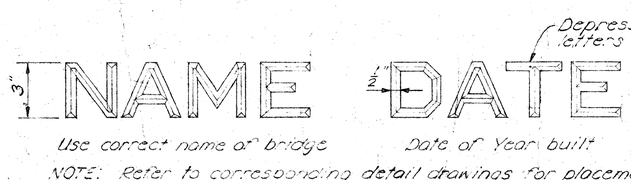

NOTE: Refer to corresponding detail drawings for placement of such names & dates at end post.

Exact details & spacing of letters & figures shall be as directed by the Engineer. See Note #12

TYPICAL DETAIL OF LETTERS & FIGURES AT CONCRETE END POST

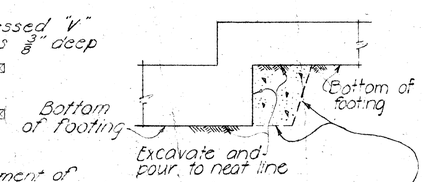

Note! In case of over excavation, the contractor shall backfill this area with minimum class "D" concrete at his own expense.

TYPICAL EXCAVATION FOR CONTINUOUS FOOTING STEP-UP

GENERAL NOTES

1 - All concrete shall be Class A unless otherwise noted.
2 - Reinforcing shall be detailed in accordance with A.C.I. Manual of Standard Practice for Detailing Reinforced Concrete Highway Structures unless otherwise noted.
3 - Clearance for reinforcing bars shall be as follows, unless otherwise noted:
  a - 1 1/2" For stirrups of beams & pier caps.
  b - 2" for ties of columns.
  c - 2" For formed walls.
  d - 3" For footings.
4 - Minimum spacing between parallel bars shall be 2 1/2 times the diameter of bars, but in no case shall the clear distance between the bars be less than 1 1/2 times the maximum size of the coarse aggregate.
5 - All dimensions relating to reinforcing are to centers of bars unless otherwise noted.
6 - Reinforcing bars shall be securely tied at all intersections & lap splices & shall be held in place during pouring to maintain their proper locations as shown on plans.
7 - Vertical column bars shall be arranged in such a manner as to miss pier cap bars above as directed by the Engineer.
8 - Except as otherwise noted on drawings, all exterior corners & re-entrant angles in concrete work shall be chamfered 3/4" x 3/4".
9 - Concrete seats receiving steel plates, leadplates or neoprene pads shall be poured monolithically with supporting structures & top of concrete seats shall be finished with a steel trowel to a smooth level surface at the elevation shown on the plans.
10 - Elastomeric Pads: Bottom of bridge bearing pads shall be secured against displacement with adhesives approved by the Engineer. Pads shall be incidental to concrete and will not be paid for separately.
11 - Forms for all exposed surfaces of separation structures and surfaces of retaining walls visible from a traveled way or from a populated area shall be plywood except that metal forms may permitted provided a surface finish satisfactory to the Engineer can be obtained and the use of such forms is approved in writing by the Engineer. Forms for round columns shall be made of materials that will give a smooth finish and true dimensions as given in the plans. Forms for prestressed concrete members shall be either metal or plywood.
12 - Gothic letters and figures approximating dimensions shown will be acceptable if approved by the Engineer.
13 - The contractor shall verify the location of all existing utility lines and notify the respective owners before commencing work of excavation or driving of piles.
14 - Standard Detail Drawings refer to all structures in general, except for modifications as may be required for special conditions. For such modifications refer to the corresponding detailed drawings.

APPROVAL RECOMMENDED:
Paul T. Yamashita — 1-23-70
BRIDGE DESIGN ENGINEER — DATE

APPROVED
For Paul T. Yamashita — 1-28-70
ASSISTANT CHIEF, ENGINEERING — DATE

NO.	REVISION	APPROVED BY	DATE

STATE OF HAWAII
DEPARTMENT OF TRANSPORTATION
HIGHWAYS DIVISION

STANDARD DETAILS
NOTES AND MISCELLANEOUS DETAILS

Date: October 1969

SHEET No. 54 OF 58 SHEETS DB-100

ORIGINAL PLAN	SURVEY PLOTTED BY	DATE
	DRAWN BY T.M.	
	TRACED BY	
	DESIGNED BY	
NOTE BOOK	QUANTITIES BY	
No.	CHECKED BY	

PRINTED ON NO. 1000H CLEARPRINT

AS BUILT

185-S16

FED. ROAD DIST. NO.	STATE	FED. AID PROJ. NO.	FISCAL YEAR	SHEET NO.	TOTAL SHEETS
HAWAII	HAW.				

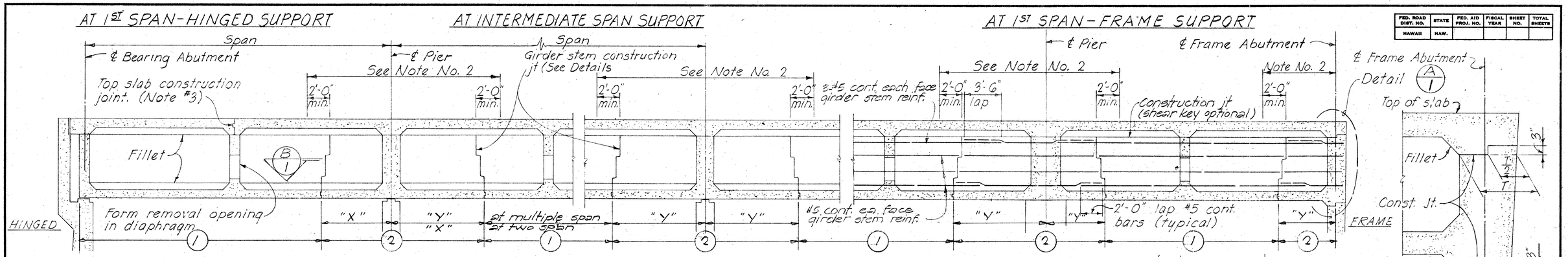

PLACING DIAGRAM FOR SUPERSTRUCTURE CONCRETE

NOTE:

1. Numbers ① & ② indicate sequence of placing bottom slab & girder stem concrete. ② may be placed with ① when approved by the Engineer provided that the ① sections adjoining the ② sections are placed in this pour. For any deviation from the above the Contractor shall submit a diagram to the Engineer for approval.
2. No top slab construction joint or form removal opening shall be located in the region over the piers as noted, nor in the supporting section of a hinged span.
3. When top slab is not poured continuously, and top slab forms are not removed, construction joint in top slab shall be located over an intermediate diaphragm.
4. Top slab concrete shall be placed separately from the stem. Top slab concrete may be placed continuously or in parts as approved by the Engineer, providing pour is not in conflict with the above notes.
5. Dimension "X" = 1/4 span. "Y" = 1/5 span.
6. No lapping of main bars shall be permitted at construction joints.

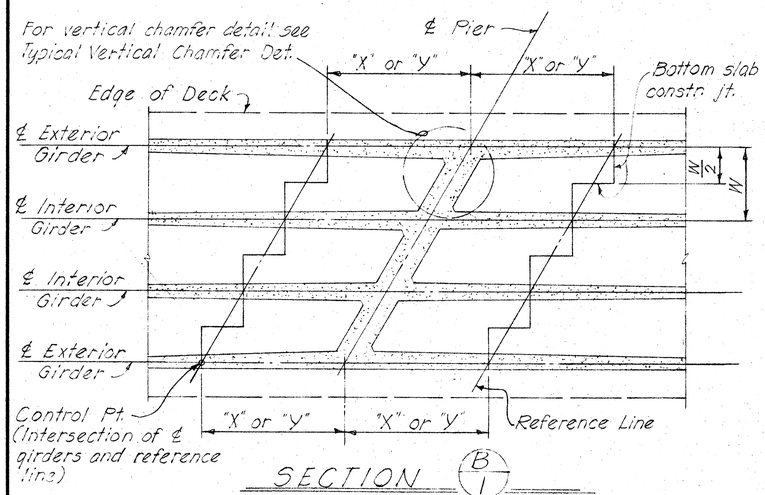

SECTION B/1

TREATMENT OF CONSTRUCTION JOINT BRIDGES ON SKEW

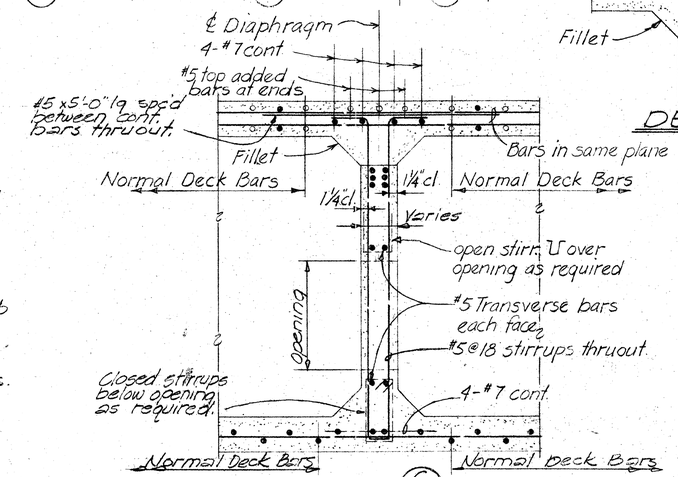

SECTION C/1

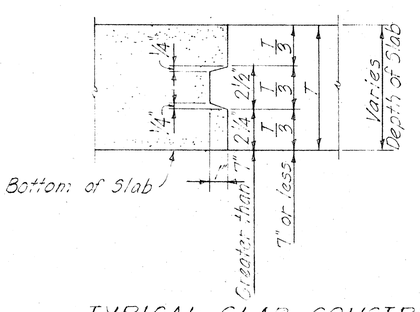

NOTE:

If the Contractor elects to leave top slab forms in place, form removal opening shall be omitted and replaced by 3" vent.

No vertical shoring shall be placed in the center half of top slab span W.

TYPICAL SLAB CONSTRUCTION JOINT DETAIL

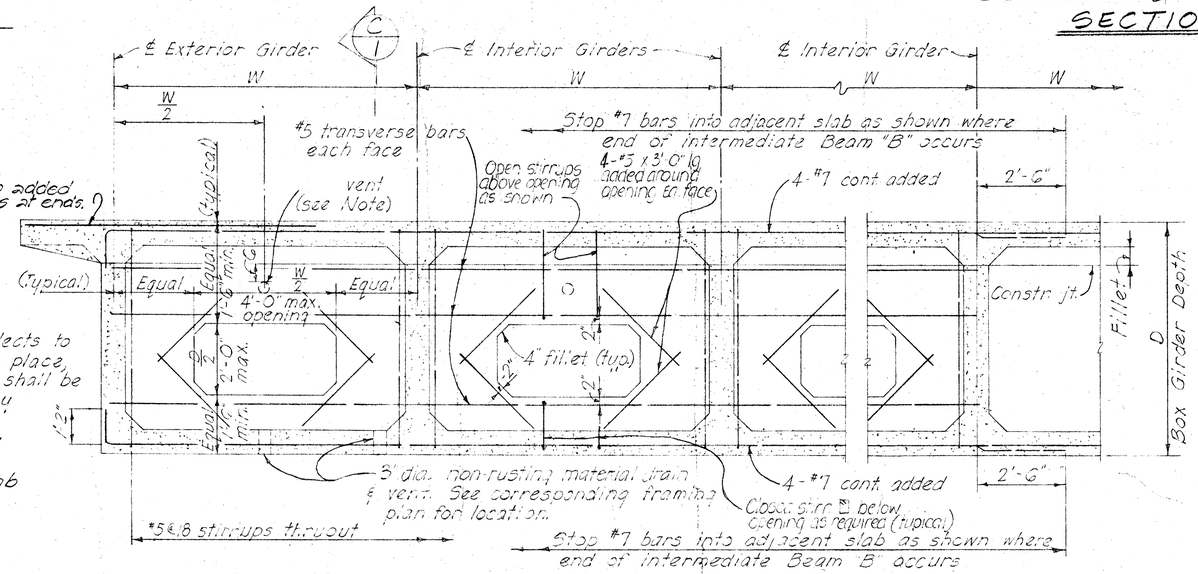

AT NON-CONTINUOUS ENDS TYPICAL INTERIOR SPAN

TYPICAL BEAM "B" DETAILS

NO.	REVISION	APPROVED BY	DATE

APPROVAL RECOMMENDED:
Paul T. Hamashita — 1-23-70
BRIDGE DESIGN ENGINEER — DATE

APPROVED
Paul T. Hamashita — 1-28-70
For ASSISTANT CHIEF, ENGINEERING — DATE

STATE OF HAWAII
DEPARTMENT OF TRANSPORTATION
HIGHWAYS DIVISION

STANDARD DETAILS
CONCRETE BOX GIRDER

Date

SHEET No. 6-2 OF 6-8 SHEETS DB-101-1

ORIGINAL PLAN	SURVEY PLOTTED BY	DATE
	DRAWN BY	
	TRACED BY	
NOTE BOOK	DESIGNED BY	
	QUANTITIES BY	
No.	CHECKED BY	

PRINTED ON NO. 1000H CLEARPRINT

AS BUILT

185-S17

FED. ROAD DIST. NO.	STATE	FED. AID PROJ. NO.	FISCAL YEAR	SHEET NO.	TOTAL SHEETS
HAWAII	HAW.				

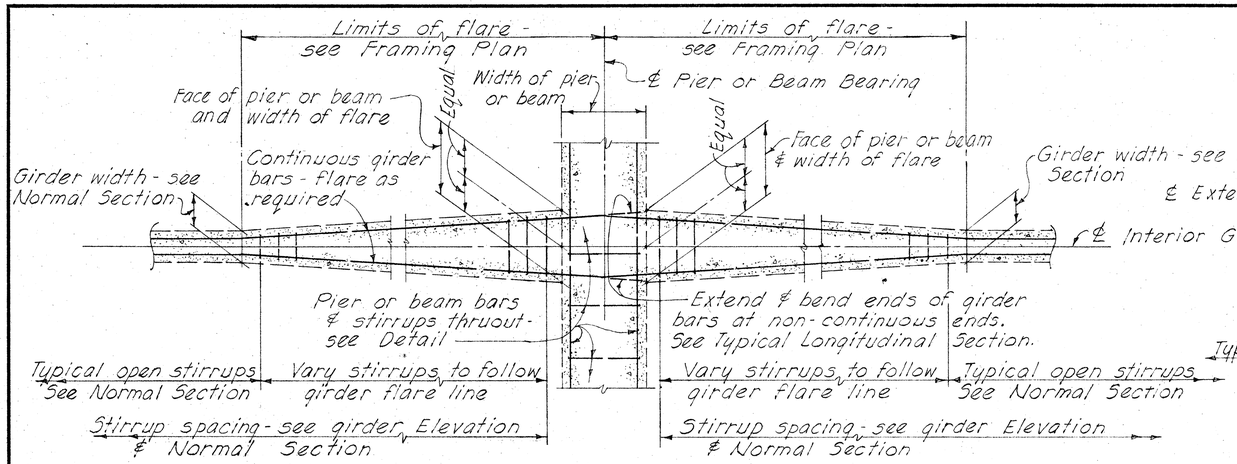

INTERIOR GIRDER

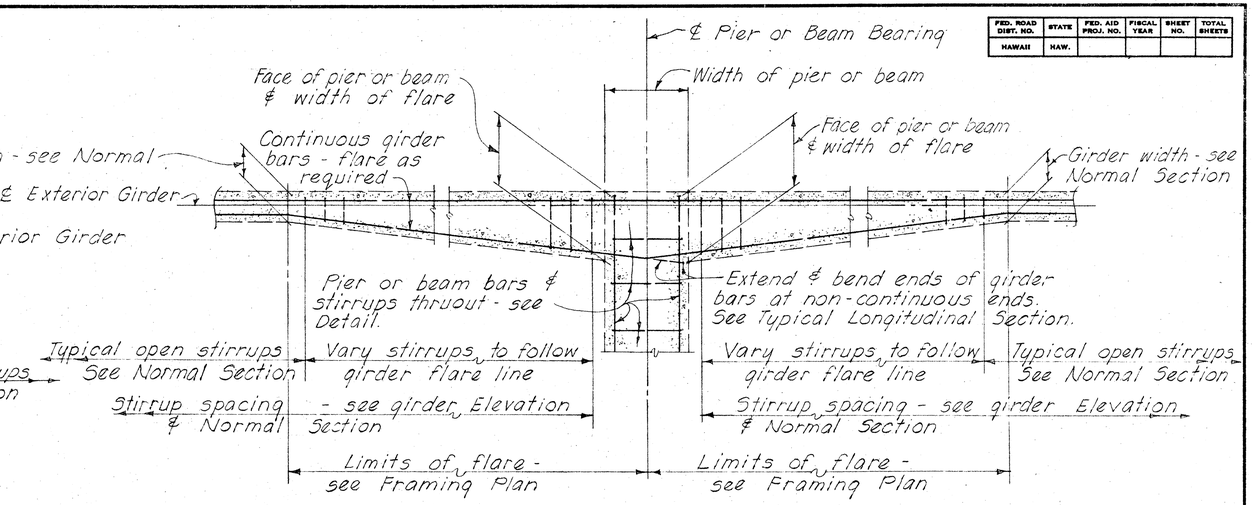

EXTERIOR GIRDER

TYPICAL DETAILS OF GIRDER FLARE AT NORMAL OR RADIAL SUPPORTS – CONTINUOUS ENDS AS SHOWN
(NON-CONTINUOUS ENDS SIMILAR EXCEPT AS OTHERWISE NOTED)

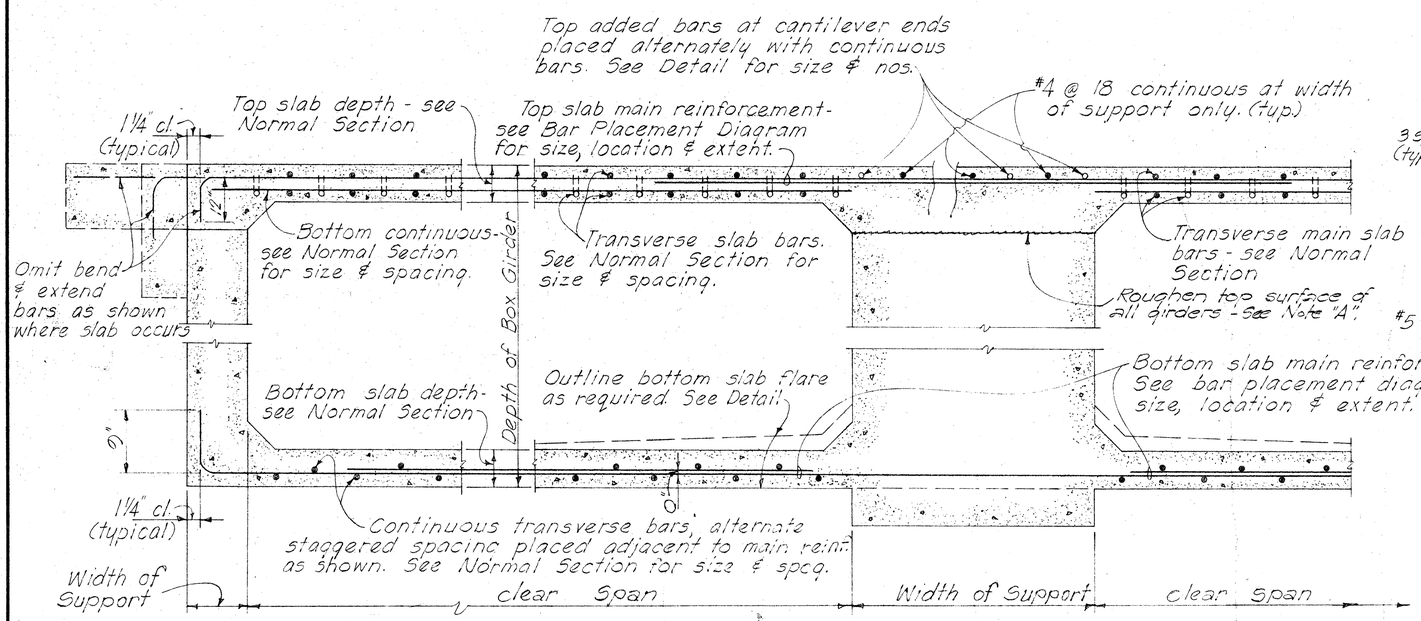

AT NON-CONTINUOUS END

AT CONTINUOUS SUPPORT

TYPICAL LONGITUDINAL DECK SECTION
ALONG GIRDER AT NORMAL OR RADIAL SUPPORTS

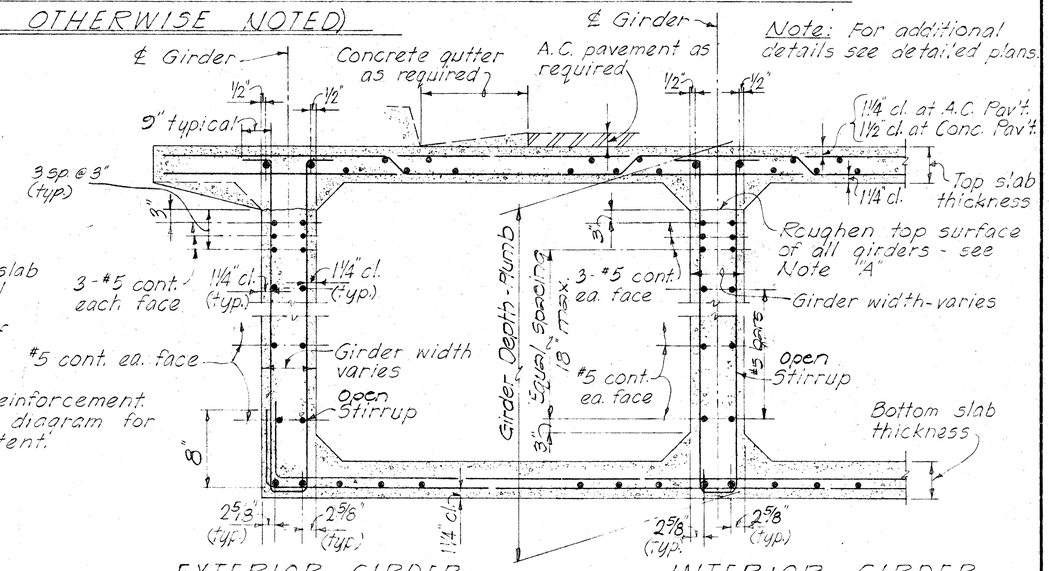

EXTERIOR GIRDER

INTERIOR GIRDER

TYPICAL NORMAL BOX GIRDER SECTION

Note "A" The entire surface of the joint shall be thoroughly cleaned of surface laitance, curing compound, and other material foreign to the concrete, and clean aggregate be exposed by abrasive blast cleaning after the curing period or immediately before placing concrete at the joint.

NO.	REVISION	APPROVED BY	DATE

APPROVAL RECOMMENDED
Paul T. Yamashita — 1-23-70
BRIDGE DESIGN ENGINEER — DATE

APPROVED
Paul T. Yamashita — 1-28-70
For ASSISTANT CHIEF, ENGINEERING — DATE

STATE OF HAWAII
DEPARTMENT OF TRANSPORTATION
HIGHWAYS DIVISION

STANDARD DETAILS
CONCRETE BOX GIRDER

Date

SHEET No. 6-3 OF 6-8 SHEETS DB-101-2

ORIGINAL PLAN	SURVEY PLOTTED BY	DATE
	DRAWN BY	
	TRACED BY	
	DESIGNED BY	
NOTE BOOK	QUANTITIES BY	
No.	CHECKED BY	

PRINTED ON NO. 1000H CLEARPRINT

AS BUILT

185 S18

FED. ROAD DIST. NO.	STATE	FED. AID PROJ. NO.	FISCAL YEAR	SHEET NO.	TOTAL SHEETS
HAWAII	HAW.				

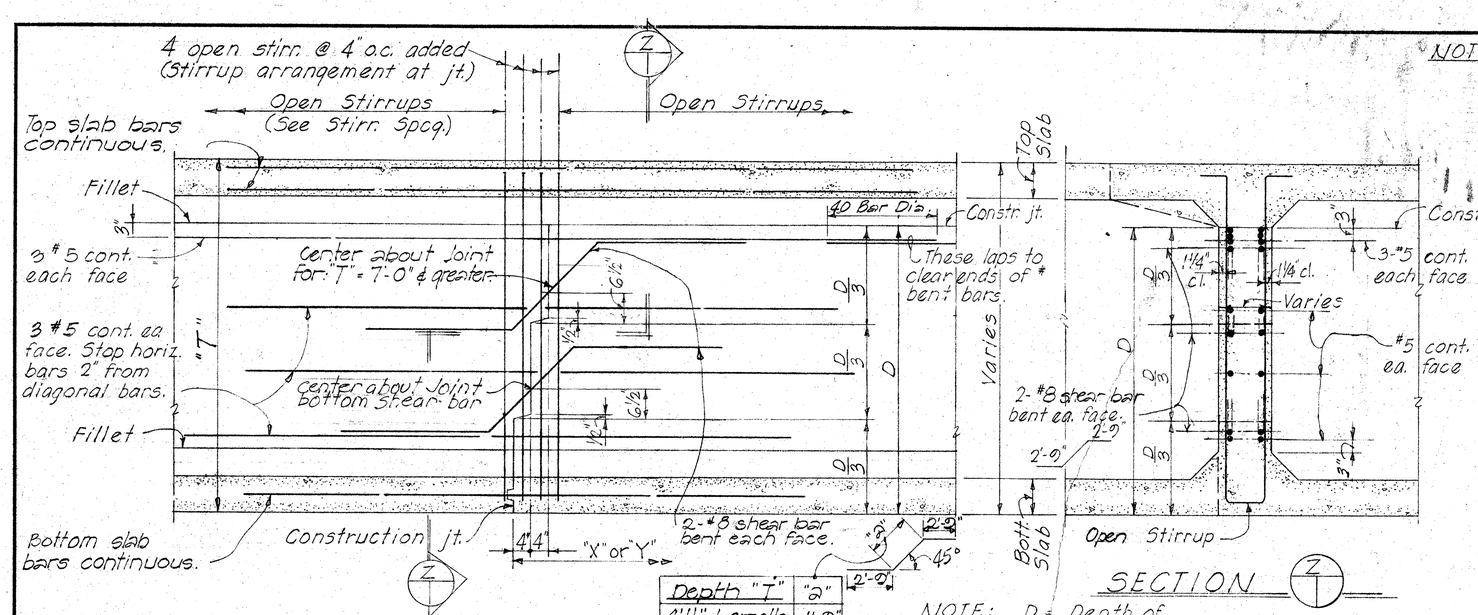

NOTE:
D = Depth of girder stem to bottom of slab.
S = Distance between top & bott. cont. girder stem longitudinal bars.
For additional details see Normal Section of the Plans.

GIRDER STEM CONSTRUCTION JOINT

Depth "T"	"a"
4'-11" & smaller	1'-9"
5'-0" to 5'-11	2'-0"
6'-0" to 6'-11"	2'-3"
7'-0" & greater	3'-0"

NOTE: D = Depth of girder stem to bott. of slab.

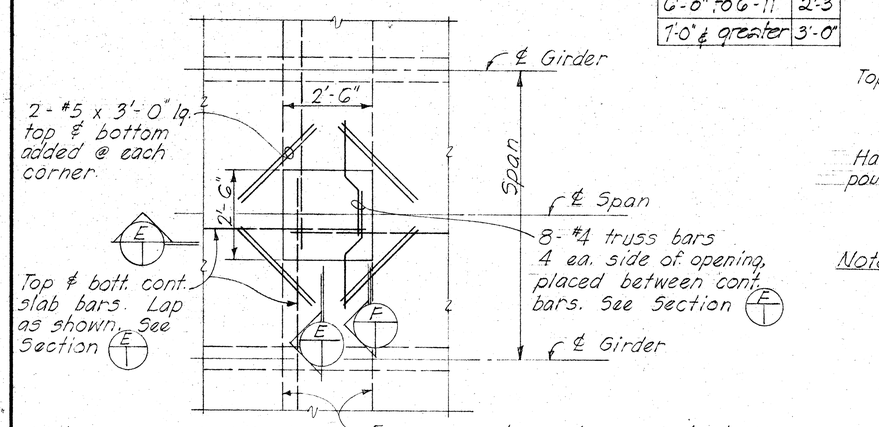

Note: Final location of opening shall be determined by the Engineer.

Form removal opening may extend from edge of deck to edge of deck with approval of the Engineer. Lap small longitudinal deck bars as shown on Section

PART PLAN - DECK
SHOWING FORM REMOVAL OPENING

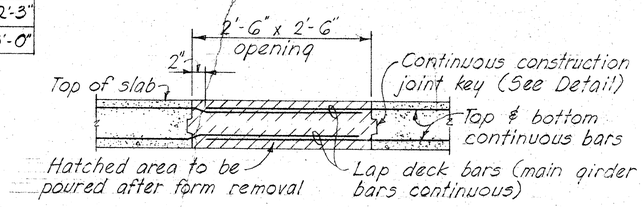

SECTION

Note: Form removal opening at top slab shall not be located where main girder bars occur.

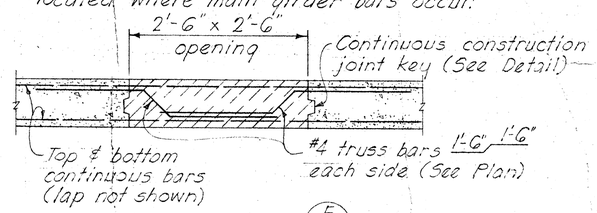

SECTION

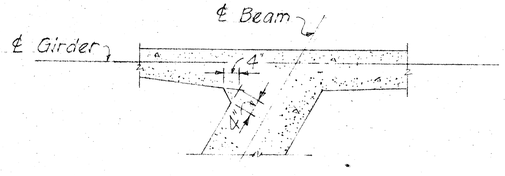

TYPICAL DETAIL OF VERTICAL CHAMFER AT ACUTE INTERSECTION OF SKEWED CONCRETE MEMBER

ORIGINAL PLAN	SURVEY PLOTTED BY	DATE
	DRAWN BY	
	TRACED BY	
NOTE BOOK	DESIGNED BY	
	QUANTITIES BY	
No.	CHECKED BY	

APPROVAL RECOMMENDED:

BRIDGE DESIGN ENGINEER — DATE

APPROVED

ASSISTANT CHIEF, ENGINEERING — DATE

NO	REVISION	APPROVED BY	DATE

STATE OF HAWAII
DEPARTMENT OF TRANSPORTATION
HIGHWAYS DIVISION

STANDARD DETAILS
CONCRETE BOX GIRDER

Date

SHEET No. 64 OF 68 SHEETS DB-101-3

PRINTED ON NO. 1000H CLEARPRINT

AS BUILT

185-S19

FED. ROAD DIST. NO.	STATE	FED. AID PROJ. NO.	FISCAL YEAR	SHEET NO.	TOTAL SHEETS
HAWAII	HAW.				

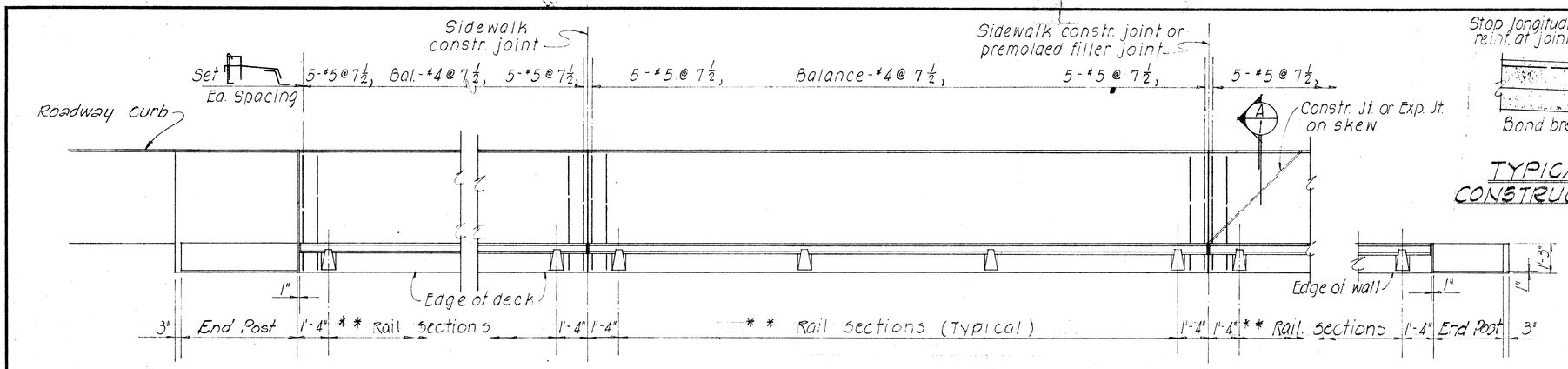

AT BRIDGE END POST — INTERMEDIATE — AT RETAINING WALL END POST

RAILING PLAN

SCALE: 3/8" = 1'-0"

**NOTE!!
The contractor shall layout the railing to provide 3 continuous panels whenever possible. 2 or 4 continuous panels will be permitted to complete the layout when 3 continuous panels cannot be made. Single panels will not be permitted

NOTES!!
1. Rail Posts shall be normal to grade
2. Provide double posts at each expansion jt., fixed bridge jt. & as shown on detailed drawings.

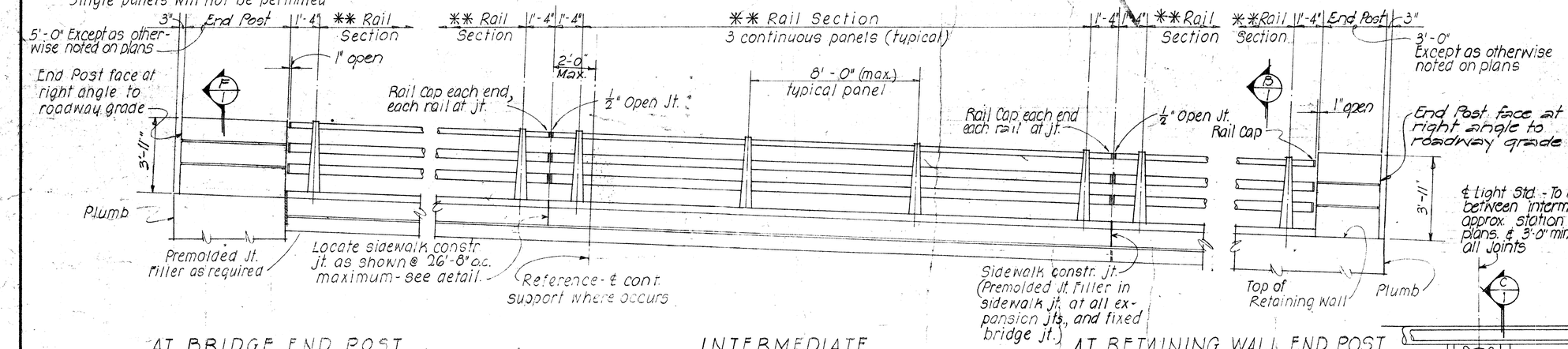

AT BRIDGE END POST — INTERMEDIATE — AT RETAINING WALL END POST

EXTERIOR RAILING ELEVATION

SCALE: 3/8" = 1'-0"

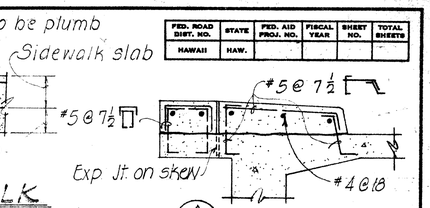

TYPICAL SIDEWALK CONSTRUCTION JOINT DETAIL

Scale: ½" = 1'-0"

AT SKEW

Scale: ½" = 1'-0"

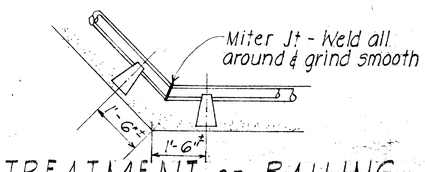

TREATMENT OF RAILING AT SKEWED ENDS

SCALE: ½" = 1'-0"

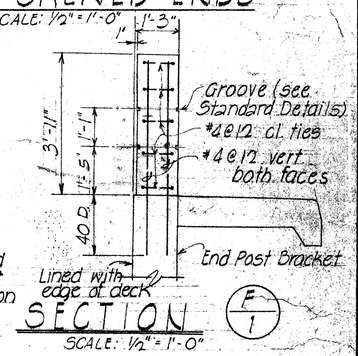

SECTION

SCALE: ½" = 1'-0"

NO.	REVISION	APPROVED BY	DATE
1	Clarify sidewalk reinf	H.C.	10-13-70

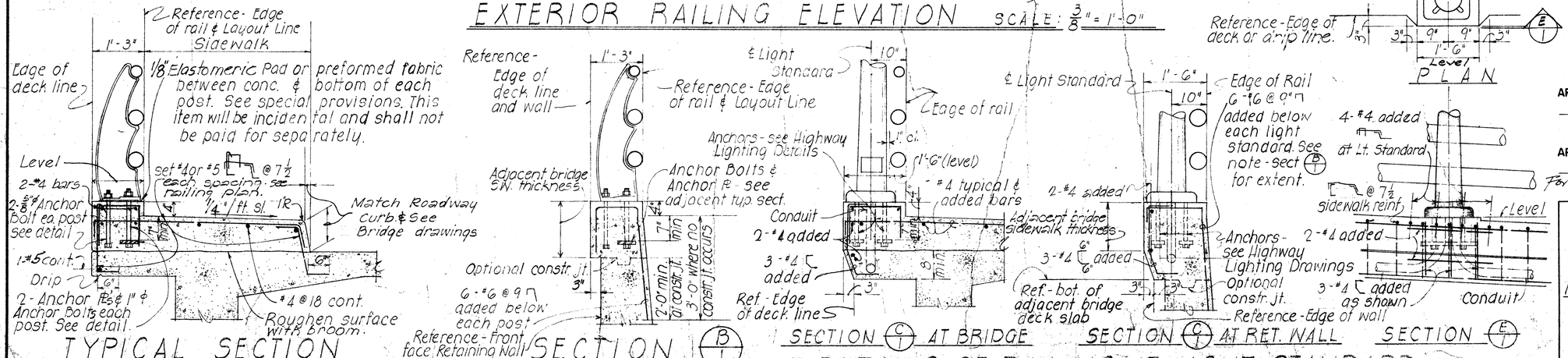

TYPICAL SECTION

SCALE: ¾" = 1'-0"

SECTION B/1

SCALE: ¾" = 1'-0"

SECTION C/1 AT BRIDGE — SECTION C/1 AT RET. WALL — SECTION E/1

DETAILS OF RAILING AT LIGHT STANDARD

SCALE: ¾" = 1'-0

PLAN

APPROVAL RECOMMENDED:
Paul T. Yamashita — BRIDGE DESIGN ENGINEER — DATE 1-23-70

APPROVED
For Paul T. Yamashita — ASSISTANT CHIEF, ENGINEERING — DATE 1-28-70

STATE OF HAWAII
DEPARTMENT OF TRANSPORTATION
HIGHWAYS DIVISION

STANDARD DETAILS
METAL BRIDGE RAILING
THREE RAIL COMBINATION TYPE

Date

SHEET No. S-15 OF S-38 SHEETS DB-203-1

185-S20

ORIGINAL PLAN	SURVEY PLOTTED BY	DATE
	DRAWN BY	
	NOTE BOOK	DESIGNED BY
	No.	QUANTITIES BY
		CHECKED BY

PRINTED ON NO. 1000H CLEARPRINT

FED. ROAD DIST. NO.	STATE	FED. AID PROJ. NO.	FISCAL YEAR	SHEET NO.	TOTAL SHEETS
HAWAII	HAW.				

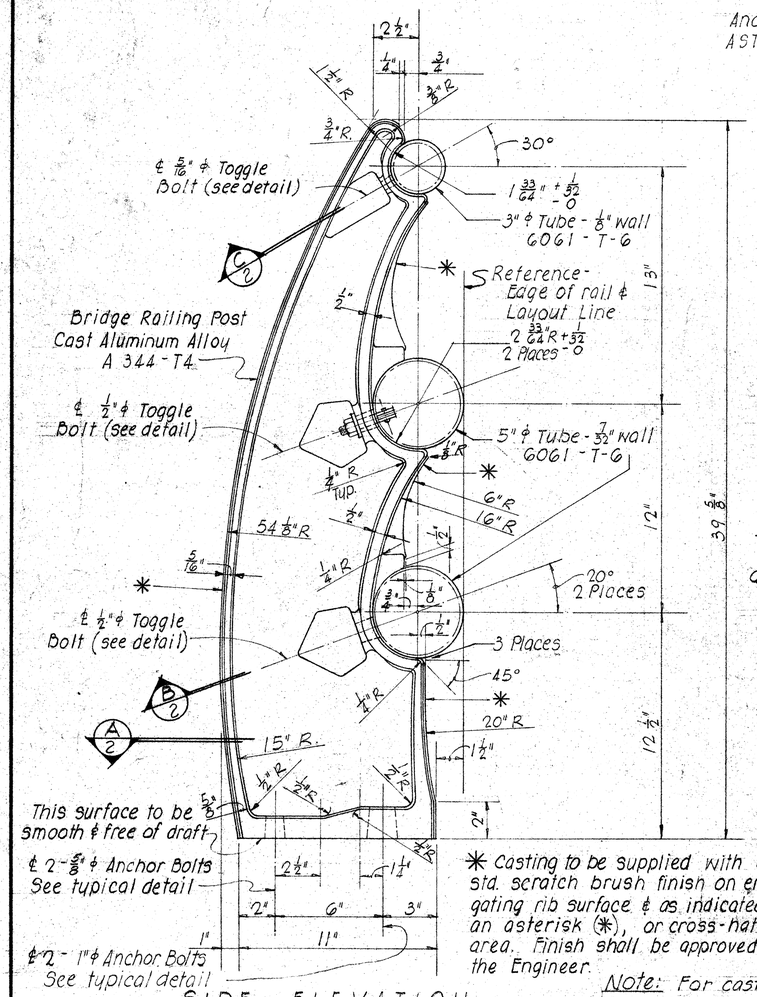

SIDE ELEVATION

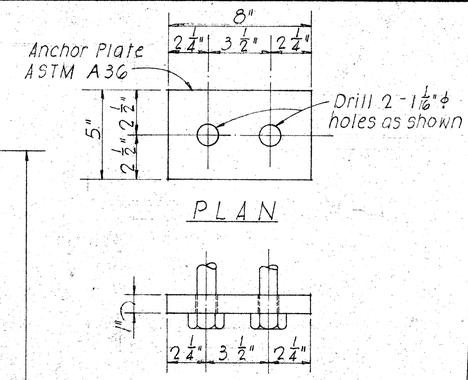

ANCHOR PLATE DETAIL

SCALE: 3" = 1'-0"

NOTE!!

Unless otherwise specified, draft angles = 3°, corner radii = 1/8" R, Fillet radii = 3/8" radii, casting tolerance = ± 1/16", and wall thickness = ± 1/32".

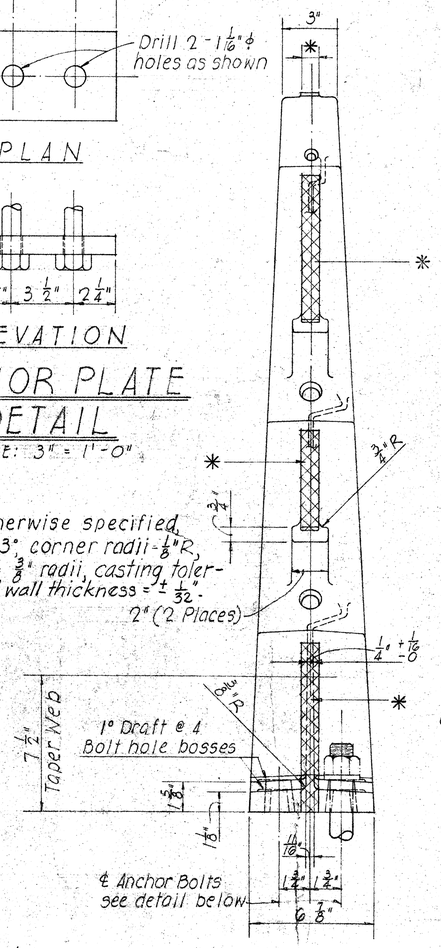

END ELEVATION

* Casting to be supplied with a std. scratch brush finish on entire gating rib surface ℄ as indicated by an asterisk (*), or cross-hatched area. Finish shall be approved by the Engineer.

Note: For cast post and rails, see Specifications.

TYPICAL RAIL POST DETAILS

SCALE: 3" = 1'-0"

NOTE:

Toggle Bolt - Cadmium plating on steel - Type NS 0.0005" thick ASTM - A165 (all parts).

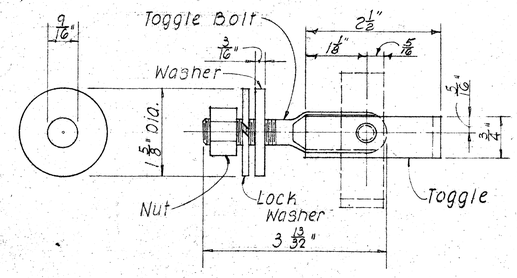

WASHER SIDE ELEVATION ASSEMBLAGE

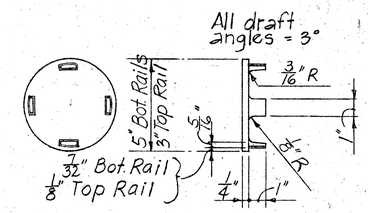

RAIL CAP DETAIL

SCALE: 3" = 1'-0"

General Note: Metal bridge railing shown is for aluminum bridge railing. See Specifications for alternate railing in steel.

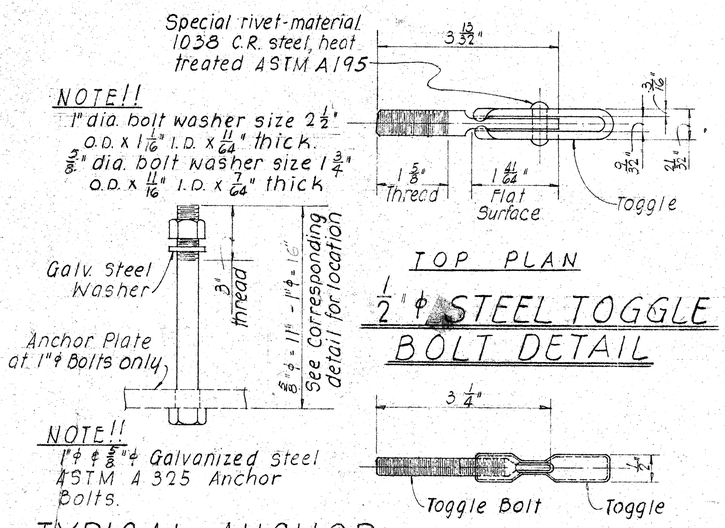

TOP PLAN

1/2" ϕ STEEL TOGGLE BOLT DETAIL

TYPICAL ANCHOR BOLT DETAIL

SCALE: 3" = 1'-0"

TOP PLAN

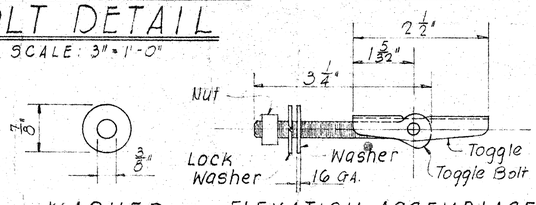

WASHER ELEVATION ASSEMBLAGE

5/16" ϕ STEEL TOGGLE BOLT DETAIL

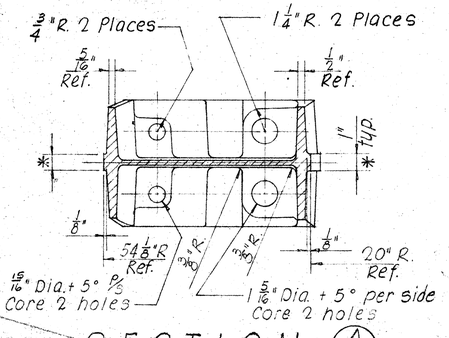

SECTION A/2

SCALE: 3" = 1'-0"

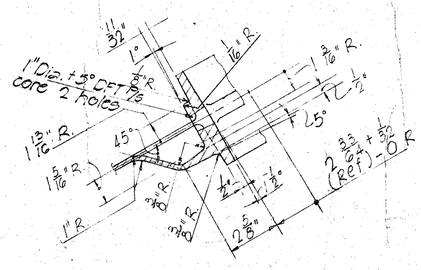

SECTION B/2

SCALE: 3" = 1'-0"

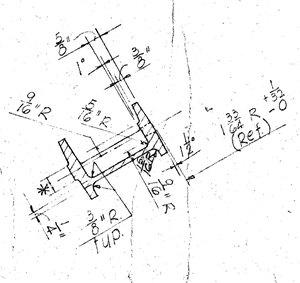

SECTION C/2

SCALE: 3" = 1'-0"

APPROVAL RECOMMENDED: Paul T. Yamashita — BRIDGE DESIGN ENGINEER — 1-23-70 DATE

APPROVED For Paul T. Yamashita — ASSISTANT CHIEF, ENGINEERING — 1-28-70 DATE

NO.	REVISION	APPROVED BY	DATE

STATE OF HAWAII
DEPARTMENT OF TRANSPORTATION
HIGHWAYS DIVISION

STANDARD DETAILS

METAL BRIDGE RAILING

THREE RAIL COMBINATION TYPE

Date

SHEET No. 5-6 OF 5-8 SHEETS DB-203-2

SURVEY PLOTTED BY | DATE | ORIGINAL PLAN | TRACED BY | DESIGNED BY | NOTE BOOK | QUANTITIES BY | CHECKED BY | No.

PRINTED ON NO. 1000K CLEARPRINT

AS BUILT

185-S21

FED. ROAD DIST. NO.	STATE	FED. AID PROJ. NO.	FISCAL YEAR	SHEET NO.	TOTAL SHEETS
HAWAII	HAW.				

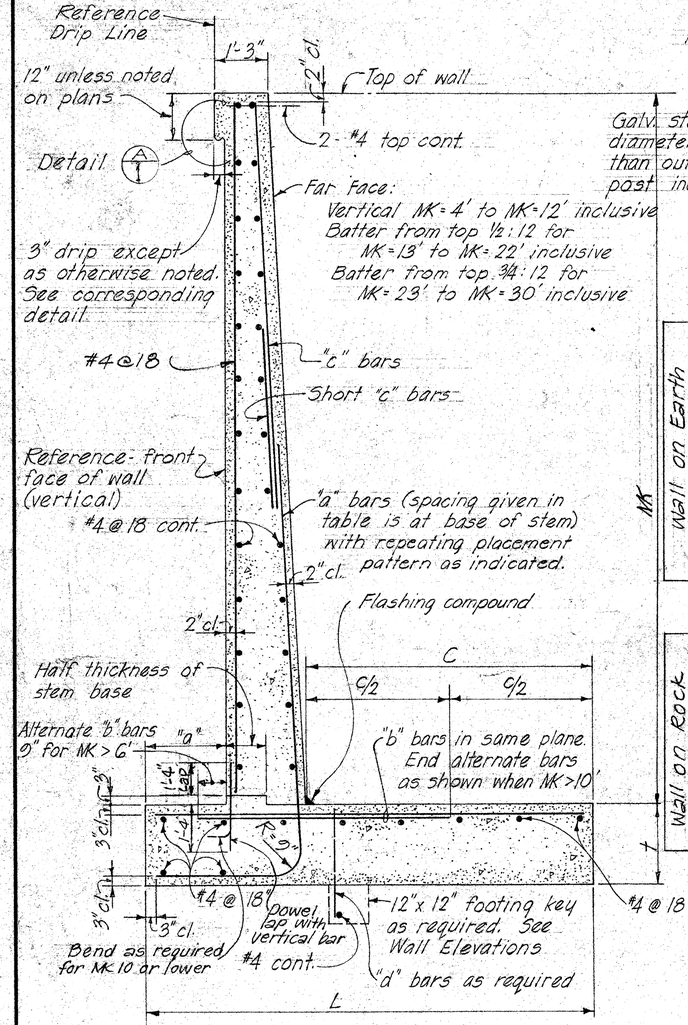

WALL SECTION

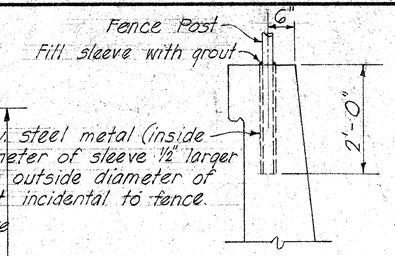

CHAIN LINK FENCE POST DETAIL

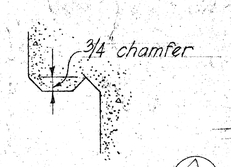

DETAIL A/1

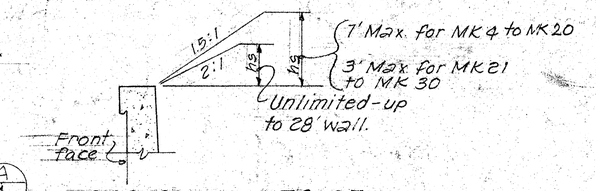

DESIGN LIMITS OF WALL SURCHARGE AND SLOPES

SCHEDULE OF DIMENSIONS AND REINFORCING STEEL

Wall on Earth

Maximum "MK"	4E	5E	6E	7E	8E	9E	10E	11E	12E	13E	14E	15E	16E	17E	18E	19E	20E	21E	22E	23E	24E	26E	28E	30E
a	6"	6"	6"	12"	12"	12"	12"	12"	12"	12"	15"	18"	21"	24"	24"	24"	27"	30"	33"	36"	39"	54"	60"	72"
t	14"	14"	14"	14"	14"	14"	14"	18"	18"	18"	18"	18"	21"	21"	24"	24"	24"	27"	30"	31"	33"	36"	39"	42"
L	2.5'	3.0'	3.5'	4.0'	4.5'	5.0'	5.5'	6.0'	6.5'	7.0'	7.75'	8.25'	9.0'	9.75'	10.5'	11.5'	12.5'	13.5'	14.5'	15.25'	16.0'	18.0'	20.0'	21.0'
"a" bars	#3@12"	#3@12"	#4@12"	#4@9"	#4@5½"	#5@7"	#6@7"	#6@6"	#6@5"	#7@9"	#6@5½"	#7@6"	#8@6"	#8@5¾"	#9@6"	#9@6"	#10@6"	#10@6"	#10@5½"	#10@6"	#10@5¾"	#11@6"	#11@5"	#11@4½"
"b" bars	#3@12"	#3@12"	#3@12"	#3@9"	#4@11"	#4@7"	#5@7"	#5@6"	#5@5"	#7@9"	#6@5½"	#7@6"	#8@6"	#7@5¾"	#8@6"	#9@6"	#10@6"	#10@6"	#10@5½"	#10@6"	#10@5¾"	#11@6"	#11@5"	#11@4½"
"c" bars								#4	#4	#4	#4	#4	#5	#5	#5	#6	#6	#6	#7	#7	#7	#7	#7	#7
"d" bars	#3@12"	#3@12"	#3@12"	#3@12"	#4@18"	#4@15"	#4@15"	#4@12"	#4@11"	#4@9"	#5@12"	#5@12"	#5@10"	#5@9"	#5@9"	#5@8"	#6@10"	#6@9"	#7@12"	#7@11"	#7@10"	#7@	#7@	#7@6"

Wall on Rock

Maximum "MK"	4R	5R	6R	7R	8R	9R	10R	11R	12R	13R	14R	15R	16R	17R	18R	19R	20R	21R	22R	23R	24R	26R	28R	30R
a	6"	6"	6"	12"	12"	12"	12"	12"	12"	12"	15"	18"	21"	21"	21"	21"	24"	24"	27"	30"	33"	39"	39"	51"
t	14"	14"	14"	14"	14"	14"	14"	18"	18"	18"	18"	18"	18"	18"	18"	21"	21"	21"	21"	24"	24"	27"	30"	36"
L	2.5'	3.0'	3.5'	4.0	4.5'	5.0'	5.5'	6.0'	6.5'	6.75	7.25'	7.75	8.25'	8.75'	9.25'	9.75'	10.25'	10.5'	11.0'	11.5'	12.0'	13.0'	14.0'	15.0'
"a" bars	#3@12"	#3@12"	#4@12"	#4@9"	#4@5½"	#5@6"	#6@7"	#6@6"	#6@5"	#7@9"	#6@5½"	#7@6"	#8@6"	#8@6"	#9@6"	#9@6"	#10@6"	#10@6"	#10@5½"	#10@6"	#10@5¾"	#11@6"	#11@5"	#11@4½"
"b" bars	#3@12"	#3@12"	#3@12"	#3@9"	#4@11"	#4@6"	#5@7"	#5@6"	#5@5"	#7@9"	#6@5½"	#7@6"	#7@6"	#8@6"	#9@6"	#9@6"	#10@6"	#10@6"	#10@5½"	#10@6"	#10@5¾"	#10@6"	#10@5"	#9@4½"
"c" bars								#4	#4	#4	#4	#4	#5	#5	#5	#6	#6	#6	#7	#7	#7	#7	#7	#7
"d" bars	#3@12"	#3@12"	#3@12"	#3@12"	#4@18"	#4@15"	#4@15"	#4@12"	#4@11"	#4@9"	#5@12"	#5@12"	#5@10"	#5@9"	#5@9"	#5@8"	#6@10"	#6@9"	#7@12"	#7@11"	#7@10"	#7@	#7@	#7@6"

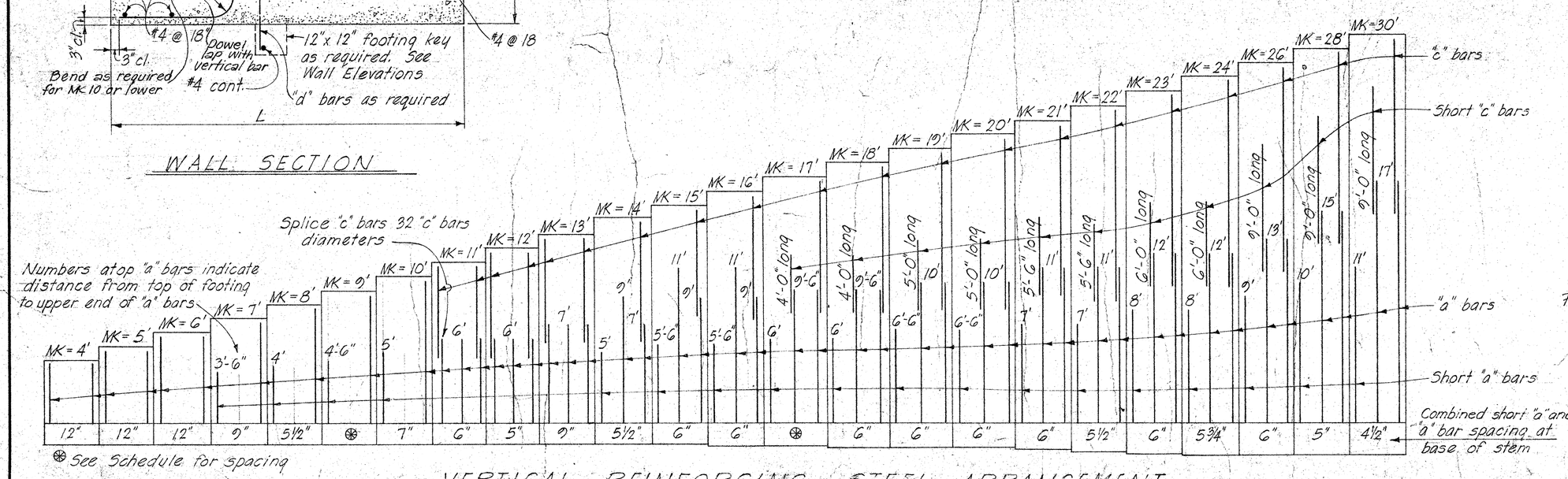

VERTICAL REINFORCING STEEL ARRANGEMENT

NO.	REVISION	APPROVED BY	DATE

APPROVAL RECOMMENDED
Paul T. Yamashita — 1-23-70
BRIDGE DESIGN ENGINEER — DATE

APPROVED
For Paul T. Yamashita — 1-28-70
ASSISTANT CHIEF, ENGINEERING — DATE

STATE OF HAWAII
DEPARTMENT OF TRANSPORTATION
HIGHWAYS DIVISION

STANDARD DETAILS
RETAINING WALL TYPE T-1

SCALE As Noted DATE

SHEET No. S-7 OF S-8 SHEETS DB-207-1

ORIGINAL PLAN	SURVEY PLOTTED BY: TRACING BY: TRACED BY: DESIGNED BY: QUANTITIES BY: CHECKED BY:
NOTE BOOK No.	DATE

PRINTED ON NO. 1000H CLEARPRINT

185-S22

FED. ROAD DIST. NO.	STATE	FED. AID PROJ. NO.	FISCAL YEAR	SHEET NO.	TOTAL SHEETS
HAWAII	HAW.				

NOTE:
Spacing of joints
Expansion = 90'-0" max.
Contraction = 30'-0" max. except where conc. railing or curb occurs 26'-8" max. (match with railing joint above)
For alternate contraction joint and control joint details - See Standard Details Sht. #DB-100

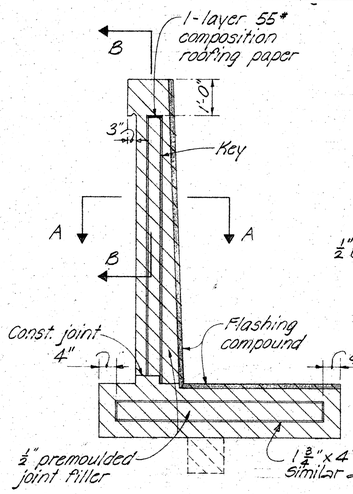

JOINT ELEVATION

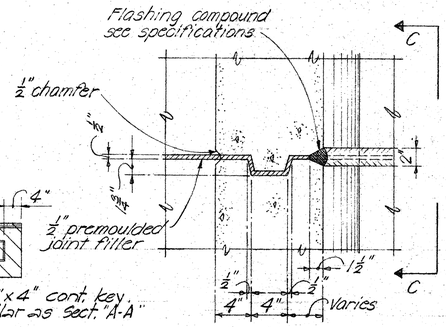

SECTION A-A

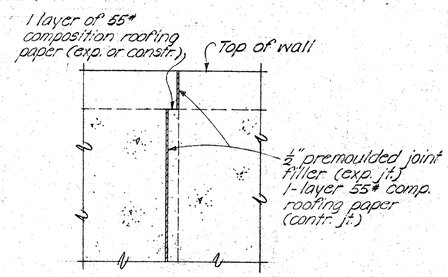

SECTION B-B

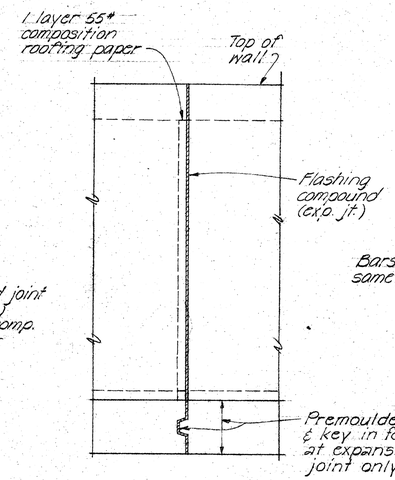

SECTION C-C

TYPICAL EXPANSION JOINT DETAILS No Scale

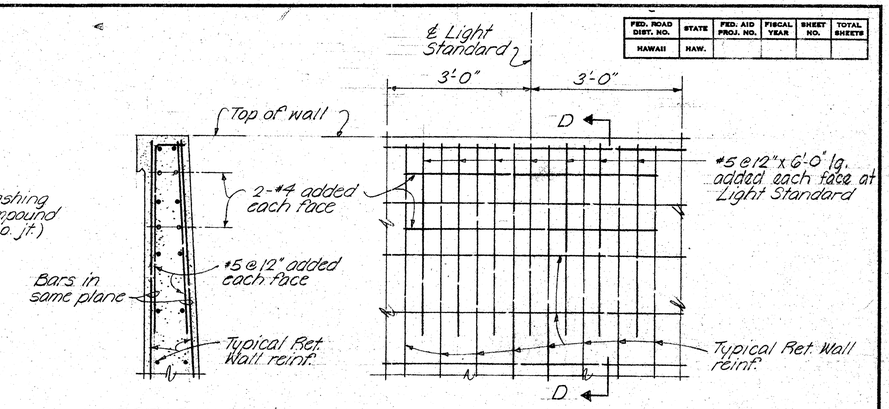

SECTION D-D ELEVATION

TYPICAL ADDED REINFORCEMENT AT LIGHT STANDARD BASE No Scale

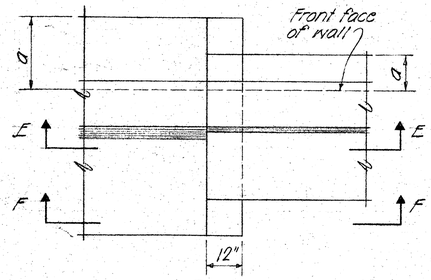

PLAN

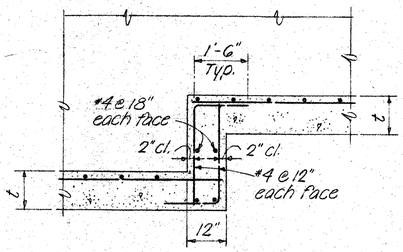

SECTION E-E

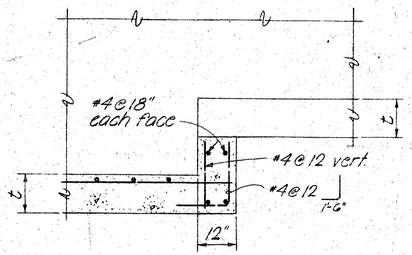

SECTION F-F

AT CONTINUOUS FOOTING

TYPICAL FOOTING STEP-UP DETAILS No Scale

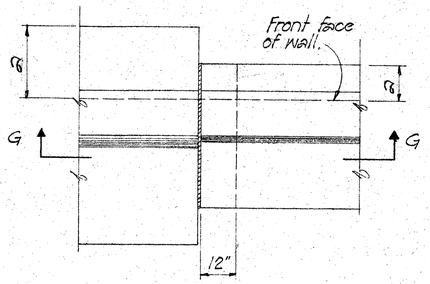

PLAN

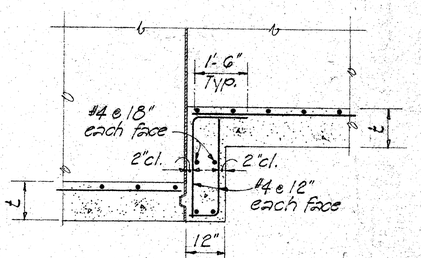

SECTION G-G

AT EXPANSION JOINT

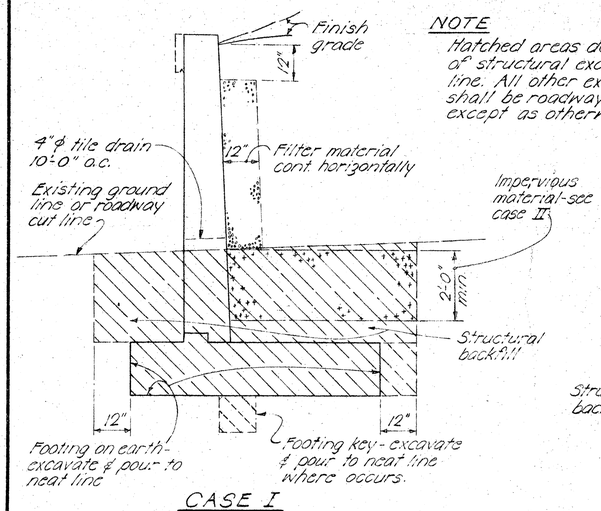

CASE I

NOTE
Hatched areas denote limits of structural excavation pay line. All other excavation shall be roadway excavation except as otherwise noted.

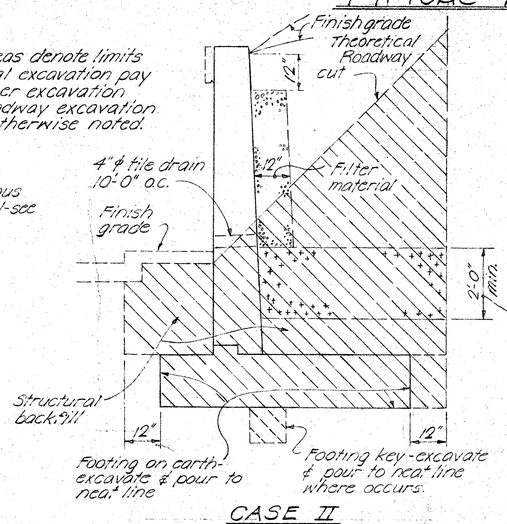

CASE II

Impervious material as selected by the Engineer incidental to structural excavation.
The subgrade upon which filter material is to be placed shall be made as impervious as possible by pneumatic tamping or other approved methods.
Impervious material shall be incidental to roadway excavation or imported borrow when used in embankment area.

STRUCTURAL EXCAVATION & DRAINAGE DETAILS No Scale

ORIGINAL PLAN		DATE
	SURVEY PLOTTED BY	
	DRAWN BY	
	TRACED BY	
	DESIGNED BY	
NOTE BOOK	QUANTITIES BY	
No.	CHECKED BY	

APPROVAL RECOMMENDED:
Paul T. Yamashita — 1-23-70
BRIDGE DESIGN ENGINEER — DATE

APPROVED
Paul T. Yamashita — 1-28-70
For ASSISTANT CHIEF, ENGINEERING — DATE

NO.	REVISION	APPROVED BY	DATE

STATE OF HAWAII
DEPARTMENT OF TRANSPORTATION
HIGHWAYS DIVISION

STANDARD DETAILS
RETAINING WALL TYPE T-1

SCALE AS NOTED DATE:

SHEET No. S-8 OF S-8 SHEETS DB-207-2

PRINTED ON NO. 1050H CLEARPRINT

AS BUILT

185-S23