FED. ROAD DIST. NO.	STATE	FED. AID PROJ. NO.	FISCAL YEAR	SHEET NO.	TOTAL SHEETS
HAWAII	HAW.	I-HI-1(64)18, UNIT 2, I-HI-1(16)11	1969	49	128

GENERAL WATER NOTES

1. The Contractor shall notify the Board of Water Supply in writing one week prior to commencing work on the water system.
2. The Contractor shall arrange with the Board of Water Supply to cut-off existing unused service laterals, remove meter boxes and appurtenances, prior to commencement of clearing and grading operations. Contractor shall provide all necessary excavation.
3. Asterisk (*) indicates work to be performed by BWS. Materials to be furnished by the Contractor unless specified as "relocate."
4. All excavation and backfill shall be done by the Contractor, including excavation for the relocation and lowering of existing mains.
5. The locations of existing water mains and appurtenances shown on the plans are approximate only and the Contractor shall verify the exact locations. Any adjustment to the water mains and appurtenances whether shown on the construction plans or not shall be made a part of the project.
6. The Contractor shall plug the ends of abandoned water mains with class "C-1" concrete. Payment for class "C-1" concrete used as plugs shall be considered incidental to the various contract items for the water system.
7. Concrete in reaction and test blocks and reinforced concrete jacket shall be Class B-1.
~~Existing 36" Main is of Southern Pipe manufacture. The Contractor shall be responsible to furnish all necessary materials, including adapters if required, to facilitate connections into existing mains. Cost of adapters shall be incidental to Pipeline Work.~~
8. H.E.Co. and H.T.Co. utility poles, handholes, manholes, ductlines and sewer mains and appurtenances to have minimum of three (3) feet clearance from water mains and other water system appurtenances. Ductlines and sewer lines crossing water mains to have minimum 6" vertical clearances.
9. Extra precaution shall be taken when rolling over new or existing cast iron pipes. Any damage to pipes and appurtenances shall be the responsibility of the Contractor.
10. Any excavation work around existing water main shall be by hand only.
~~All 36" concrete cylinder pipe shall be class 150 and manufactured in accordance with the requirements of Section 100, the Special Provisions and the Manufacture's Detail Drawings all to be approved by B.W.S.~~
11. All gate valves, fire hydrants and other appurtenances specified as "salvage" on the plans shall be removed, cleaned, and returned to B.W.S. Manana Store Yard, by the Contractor.
~~Degree of concrete cylinder bend, or length of adjacent pipes required at points of connection to the existing main shall be verified after exposure of the existing main prior to the start of construction work. Any resulting revisions required shall be done by the Contractor at his own cost. Degree of concrete cylinder elbows specified on plan at connection points are for bidding purposes only.~~
12. Temporary cleanouts shall be installed by the Contractor wherever necessary and the cost thereof shall be incidental to pipeline work.
13. In fill areas where the cover (from the existing ground) over the new main is less than three (3) feet, the Contractor shall first fill and compact the area (to provide a minimum of three (3) feet cover) prior to trenching for the new main.
14. B.W.S. shall make all taps to the existing mains for the connection of service laterals. The contractor shall perform all excavation and backfill and furnish appropriate sizes of corporation stops.

GENERAL SEWER NOTES

1. The Engineer reserves the right to request the use of reinforced concrete cradle and jacket and or piling in the event that field conditions make such structural requirements necessary.
2. The Contractor shall notify the Division of Sewers 2 days prior to commencement of sewer work.
3. Top of sewer manholes in easements shall be four (4) inches above ground unless otherwise directed by the Engineer.
4. Existing laterals shown are from best sources available. The Contractor shall verify the exact locations as required. Any other existing laterals exposed during construction shall be extended and reconnected to new mains if services are required or cut & plugged.
5. All existing laterals to be reconnected shall be in accordance with "Typical House Sewer Connection Detail," sheet G3.
6. All frames and covers on existing sewer manholes to be demolished shall be cleaned and reused on new sewer manholes.

GENERAL-ELECTRIC & TELEPHONE NOTES

1. Existing electric and telephone systems shown on these plans are located from the best sources available. The Contractor shall check and verify the exact location and depth of same.
2. Contractor to stake out proposed ductlines, pole and anchor locations; H.E.Co. to check locations before Contractor undertakes excavation.
3. Minimum depth of duct lines from finish grade to top of concrete jacket where ducts are concrete encased = 2'-0" unless otherwise shown.
4. Ducts encased in concrete jackets:
   a. Normal distance from face of jacket to all ducts to be 3" minimum.
   b. Clear distance of 1½" minimum between ducts of same utility company.
   c. Clear distances of 3" minimum between H.E.Co. ducts and H.T.Co. ducts.
5. All ducts and conduits called for installation in concrete jacket shall be inspected and approved by the respective Engineer of H.E.Co. or H.T.Co. or their representative before concrete placing. 72 hr (min.) notice shall be given before placing concrete.
6. Depth of all pullboxes, service boxes, handholes and manholes to be determined in the field.
7. Poles and anchors for H.E.Co. unless otherwise noted.
8. Depth of poles and anchor holes are taken from finish grade.
9. For pole setting depth data, see sht. No. 69
10. Installation of, and backfill for poles by H.E.Co. unless otherwise noted.
11. Backfill of anchor holes by the Contractor under H.E. Co. supervision unless otherwise noted.

GENERAL GAS NOTES

1. All work required for the installation of the gas main facilities on the Aiea Hts. Separation Structure shall be done by Honolulu Gas Co. personnel and shall not be a part of this contract.
2. The Contractor shall notify the Honolulu Gas Co. Ltd. at least 10 calendar days in advance of the bridge construction operations and shall coordinate his work with the Gas Co.

LEGEND

EXISTING	NEW	
S8	S8	Sewer Line
W8	W8	Water Line
G2	G2	Gas Line
E		Electric Duct Line
T		Telephone Duct Line
SMH	SMH	Sewer Manhole
WMH	WMH	Water Manhole
GMH	GMH	Gas Manhole
W.V.		Water Valve
W.M.		Water Meter
F.H.	F.H.	Fire Hydrant
P	P	Electric or Telephone Pole
		Electric or Telephone Pole with Anchor
L.S.		Light Standard
H.E.	H.E.	Electric Handhole or Manhole
H.T.	H.T.	Telephone Handhole or Manhole
P.Pole		Electric or Telephone Pole to be removed
	W8	~~Water Line (Remove, Clean, Paint and Reinstall)~~
A.I.P.		Cut and Plug Sewer, Water or Gas Line
		Cut, Plug and Abandon in Place Sewer, Water or Gas Line
	H8 or G6 A.C.V. (Where Indicated)	Lateral (Sprinkler System)

APPROVED:

A D Henderson — 8-20-68
Hawaiian Electric Company, Inc. — Date

T H Judd — 8-20-68
Hawaiian Telephone Company — Date

L Kawakami — 8/16/68
Chief, Engineering Division, B.W.S. — Date

H.A. — 8-19-68
for Sewer System Director, Div. of Sewers — Date

PAUL M. HIROTA REGISTERED PROFESSIONAL ENGINEER No. 1464 HAWAII, U.S.A.

THIS WORK WAS PREPARED BY ME OR UNDER MY SUPERVISION.

STATE OF HAWAII
DEPARTMENT OF TRANSPORTATION
HIGHWAYS DIVISION

UTILITY GENERAL NOTES
SEWER, WATER, GAS, ELECTRIC AND TELEPHONE

INTERSTATE ROUTE H-1
PROJ. NO. I-HI-1(16)11

Date: 8/16/68

SHEET No. 1 OF 27 SHEETS

ORIGINAL PLAN — SURVEY PLOTTED BY / DRAWN BY / TRACED BY / DESIGNED BY / QUANTITIES BY / CHECKED BY — DATE
NOTE BOOK No.

PRINTED ON NO. 1000H CLEARPRINT

4 of 9

FED. ROAD DIST. NO.	STATE	FED. AID PROJ. NO.	FISCAL YEAR	SHEET NO.	TOTAL SHEETS
HAWAII	HAW.	I-HI-1(G4):12 UNIT 2 I-HI-1(16):11	1969	50	128

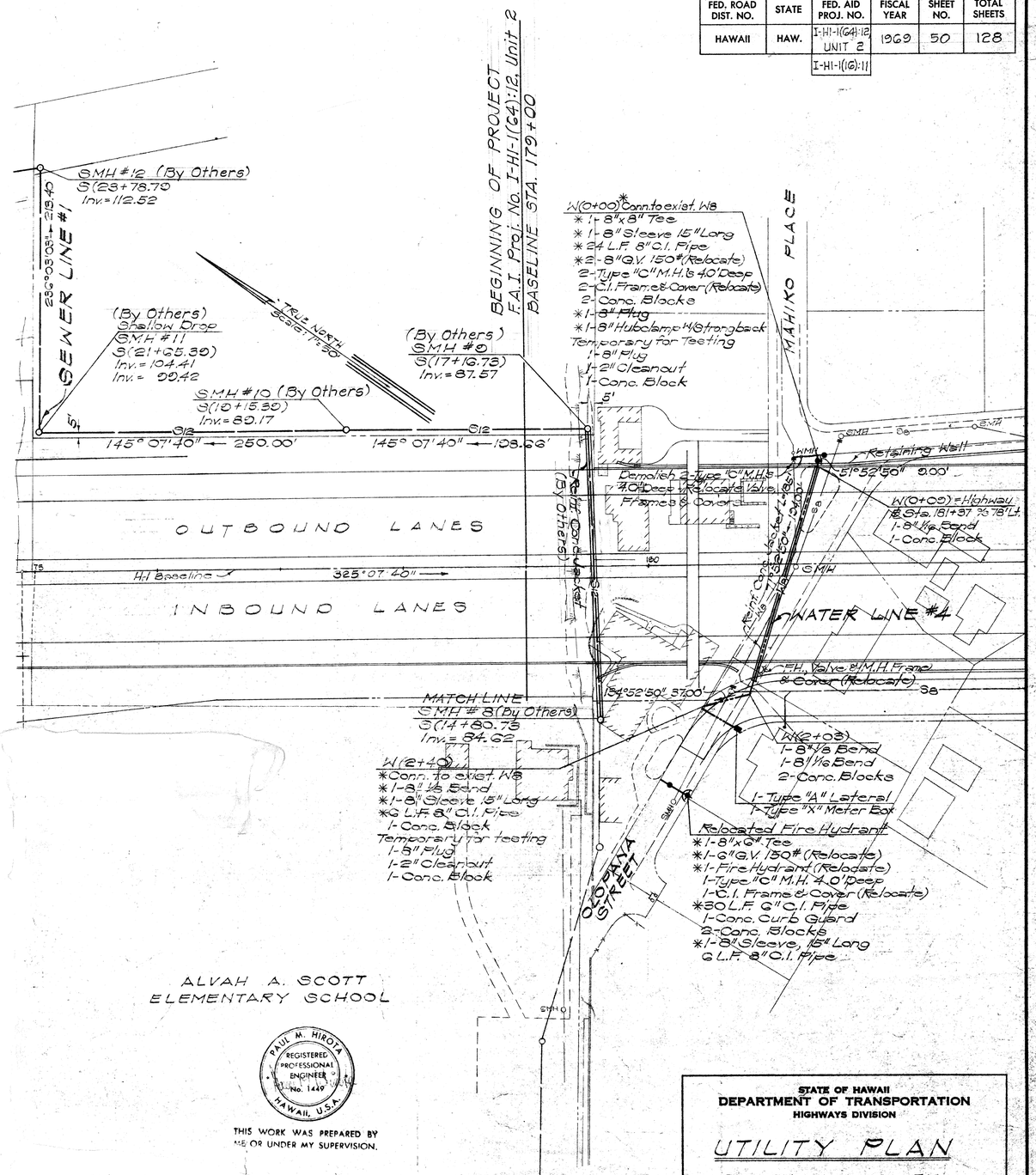

PAUL M. HIROTA
REGISTERED PROFESSIONAL ENGINEER
No. 1449
HAWAII, U.S.A.

THIS WORK WAS PREPARED BY ME OR UNDER MY SUPERVISION.

REFERENCE NOTES:

1. For Water Line Profile, See Sht. 54.
2. BWS to remove existing 6" gate valve and fire hydrant. Contractor to provide excavation, which shall be incidental to Rdwy. Exc.

APPROVED: [signature] 8-12-68
for Sewer System Director, Division of Sewers — Date

APPROVED: [signature] 8/1/68
Chief, Engineering Division, Board of Water Supply — Date

STATE OF HAWAII
DEPARTMENT OF TRANSPORTATION
HIGHWAYS DIVISION

UTILITY PLAN
SEWER AND WATER

INTERSTATE ROUTE H-1
PROJ. NO. I-HI-1(G1):11

Scale: 1"=50'-0" Date: 8/16/68

SHEET No. 2 OF 27 SHEETS

50

FED. ROAD DIST. NO.	STATE	FED. AID PROJ. NO.	FISCAL YEAR	SHEET NO.	TOTAL SHEETS
HAWAII	HAW.	I-HI-1(64):12 Unit 2	1969	51	128
		I-HI-1(16):11			

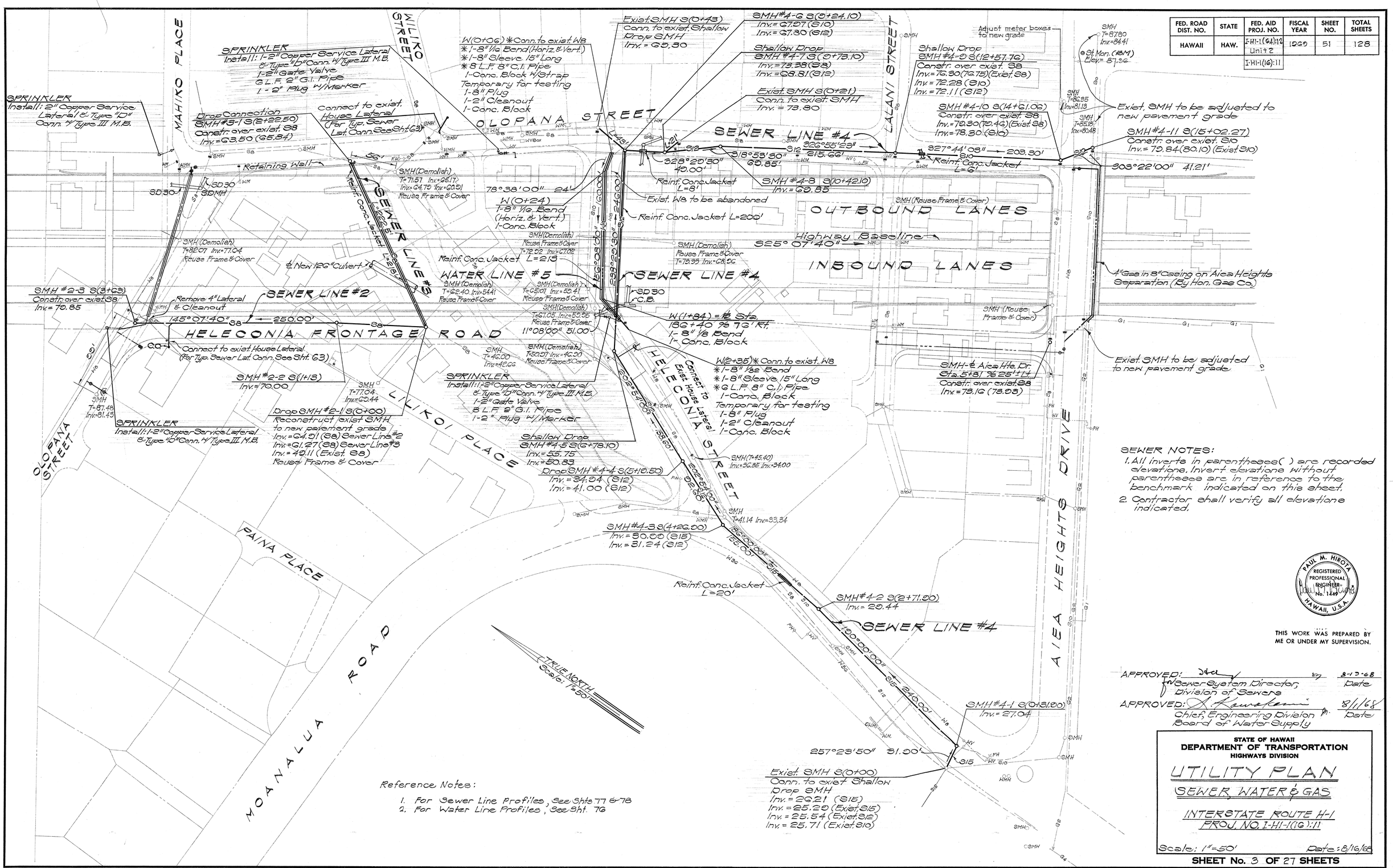

PAUL M. HIROTA
REGISTERED PROFESSIONAL ENGINEER
No. 1449
HAWAII, U.S.A.

THIS WORK WAS PREPARED BY ME OR UNDER MY SUPERVISION.

APPROVED: [signature] 8-13-68
Sewer System Director, Division of Sewers — Date

APPROVED: [signature] 8/1/68
Chief, Engineering Division, Board of Water Supply — Date

STATE OF HAWAII
DEPARTMENT OF TRANSPORTATION
HIGHWAYS DIVISION

UTILITY PLAN
SEWER, WATER & GAS

INTERSTATE ROUTE H-1
PROJ. NO. I-HI-1(16):11

Scale: 1"=50' Date: 8/16/68

SHEET No. 3 OF 27 SHEETS

51

ORIGINAL PLAN	
	SURVEY PLOTTED BY
	DRAWN BY
	TRACED BY
NOTE BOOK	DESIGNED BY
	QUANTITIES BY
No.	CHECKED BY

DATE

PRINTED ON NO. 1000H CLEARPRINT

FED. ROAD DIST. NO.	STATE	FED. AID PROJ. NO.	FISCAL YEAR	SHEET NO.	TOTAL SHEETS
HAWAII	HAW.	I-HI-1(64):112 Unit 2	1969	52	128
		I-HI-1(16):11			

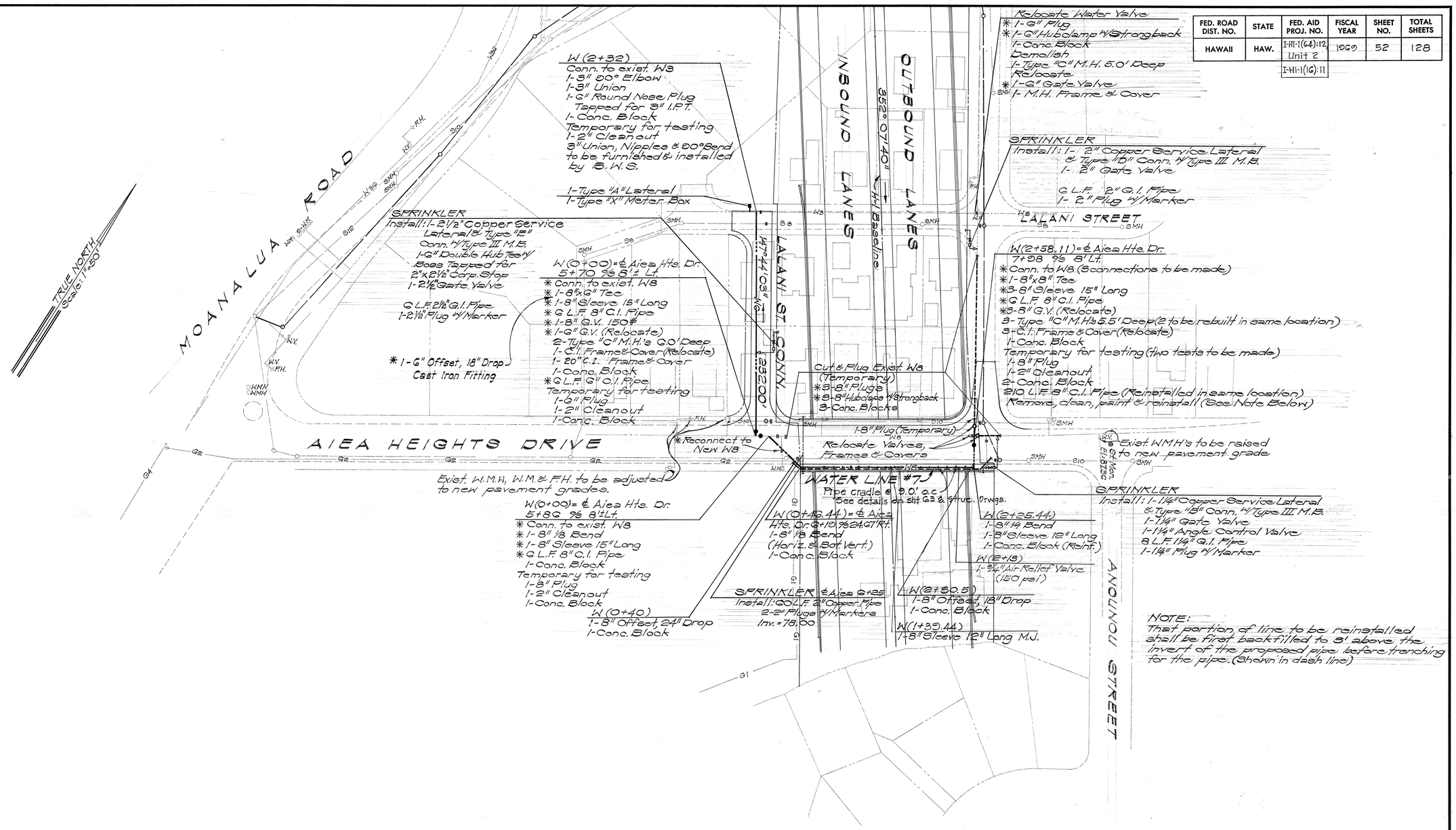

NOTE:
That portion of line to be reinstalled shall be first backfilled to 3' above the invert of the proposed pipe before trenching for the pipe. (Shown in dash line)

NOTES:

1. For Water Line Profiles, See Sht. 54.
2. The excavation to expose the 8" Gate Valves shall be incidenal to Structure Excavation for Bridges and shall not be paid for separately.
3. The excavation to expose the 6" Gate Valve shall be incidental to the excavation for the Retaining Walls and shall not be paid for separately.
4. All gate Valve removal shall be by BWS.

PAUL M. HIROTA
REGISTERED PROFESSIONAL ENGINEER
No. 1449
HAWAII, U.S.A.

THIS WORK WAS PREPARED BY ME OR UNDER MY SUPERVISION.

APPROVED: 8/1/68
Chief, Engineering Division
Board of Water Supply
Date

STATE OF HAWAII
DEPARTMENT OF TRANSPORTATION
HIGHWAYS DIVISION

UTILITY PLAN
WATER

INTERSTATE ROUTE H-1
PROJ. NO. I-HI-1(16):11

Scale: 1"=50'
Date: 8/16/68

SHEET No. 4 OF 27 SHEETS

52

ORIGINAL PLAN		DATE
	SURVEY PLOTTED BY	
	DRAWN BY	" " "
	TRACED BY	" " "
NOTE BOOK	DESIGNED BY	" " "
No.	QUANTITIES BY	" " "
	CHECKED BY	

PRINTED ON NO. 1000H CLEARPRINT

FED. ROAD DIST. NO.	STATE	FED. AID PROJ. NO.	FISCAL YEAR	SHEET NO.	TOTAL SHEETS
HAWAII	HAW.	I-H1-(6A):12, I-H1-1 (6):11, I-H1-1 (16):11	1969	53	128

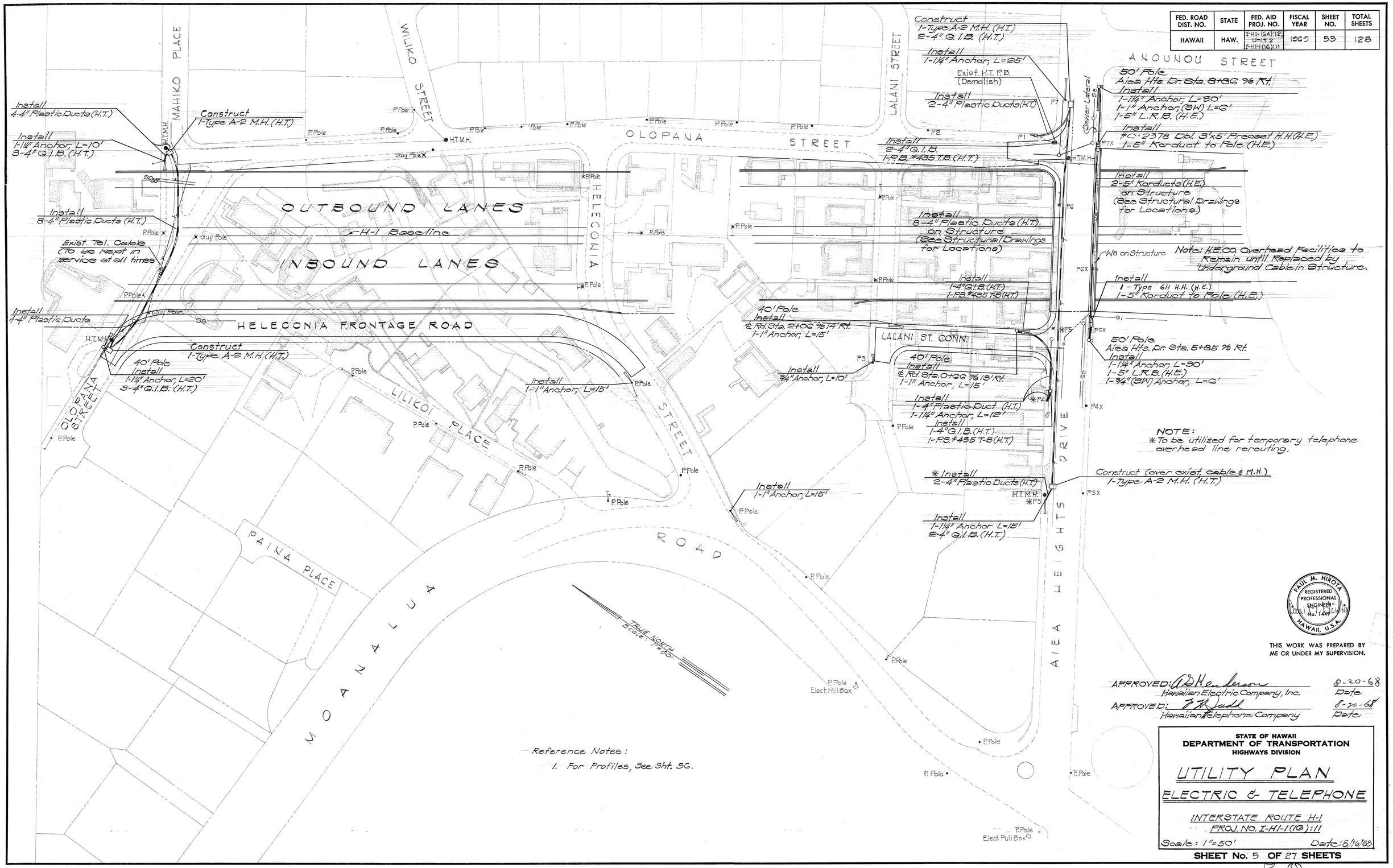

THIS WORK WAS PREPARED BY ME OR UNDER MY SUPERVISION.

PAUL M. HIROTA REGISTERED PROFESSIONAL ENGINEER No. 1449 HAWAII, U.S.A.

APPROVED: A.D. Henderson — Hawaiian Electric Company, Inc. — 8-20-68 Date

APPROVED: F.H. Judd — Hawaiian Telephone Company — 8-20-68 Date

STATE OF HAWAII
DEPARTMENT OF TRANSPORTATION
HIGHWAYS DIVISION

UTILITY PLAN
ELECTRIC & TELEPHONE

INTERSTATE ROUTE H-1
PROJ. NO. I-H1-1(16):11

Scale: 1"=50' Date: 8/16/68

SHEET No. 5 OF 27 SHEETS

ORIGINAL PLAN — NOTE BOOK No. ____

SURVEY PLOTTED BY ____ DATE
DRAWN BY ____
TRACED BY ____
DESIGNED BY ____
QUANTITIES BY ____
CHECKED BY ____

PRINTED ON NO. 1000H CLEARPRINT

FED. ROAD DIST. NO.	STATE	FED. AID PROJ. NO.	FISCAL YEAR	SHEET NO.	TOTAL SHEETS
HAWAII	HAW.	I-H1-1(G4):12 UNIT 2	1969	54	128
		I-H1-1(16):11			

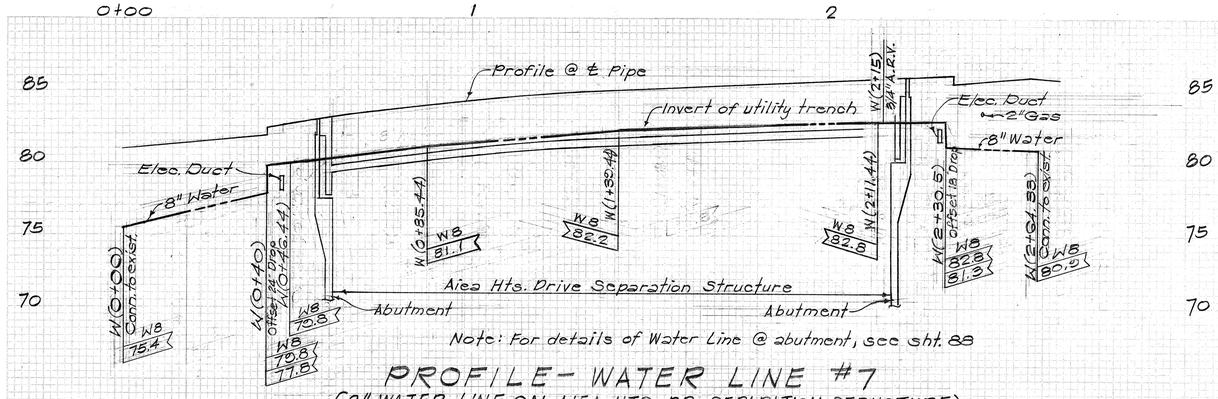

PROFILE - WATER LINE #7
(8" WATER LINE ON AIEA HTS. DR. SEPARATION STRUCTURE)
Scales: Horiz. 1" = 20'
Vert. 1" = 5'

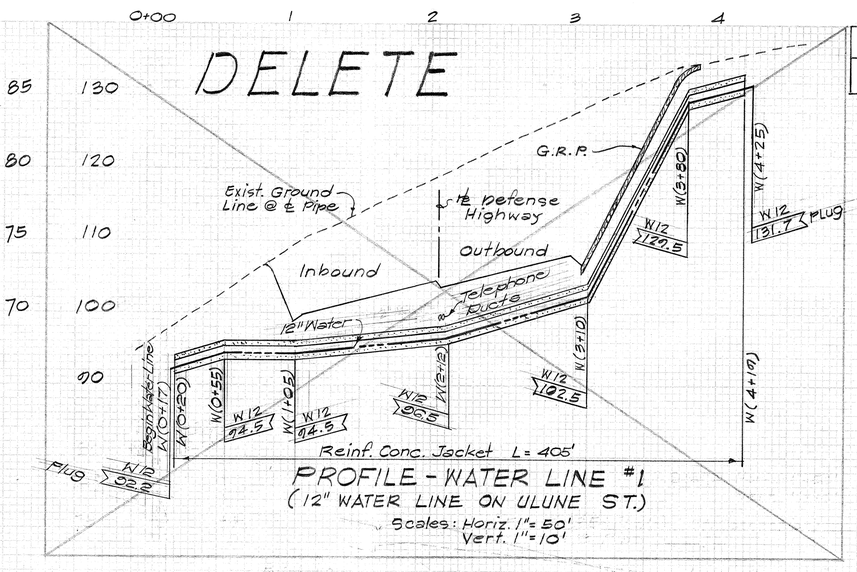

PROFILE - WATER LINE #1
(12" WATER LINE ON ULUNE ST.)
Scales: Horiz. 1" = 50'
Vert. 1" = 10'

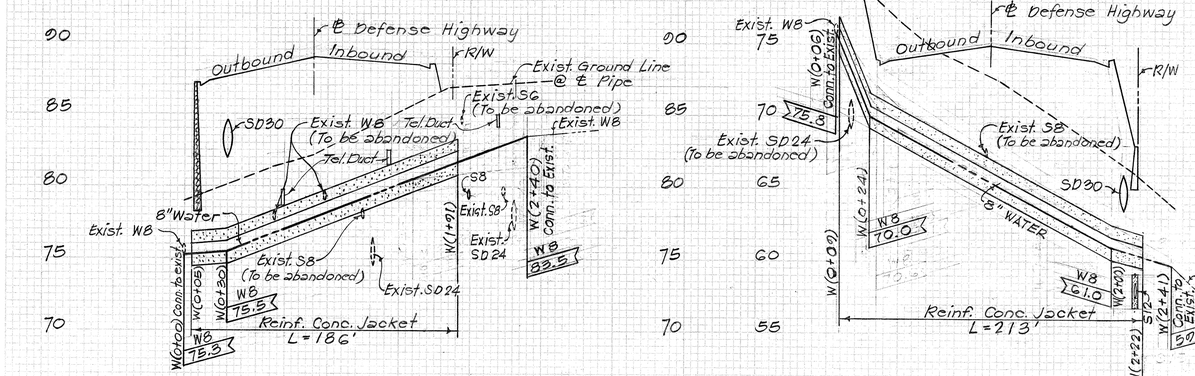

PROFILE - WATER LINE #4
(8" WATER LINE @ OLOPANA ST. EXTENSION)
Scales: Horiz. 1" = 50'
Vert. 1" = 5'

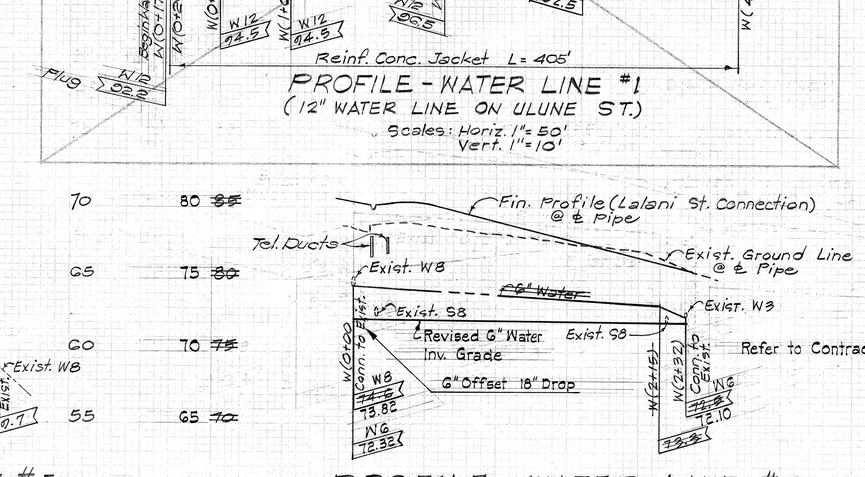

PROFILE - WATER LINE #5
(8" WATER LINE @ HELECONIA ST.)
Scales: Horiz. 1" = 50'
Vert. 1" = 5'

PROFILE - WATER LINE #6
(6" WATER LINE @ LALANI ST. CONN.)
Scales: Horiz. 1" = 50'
Vert. 1" = 5'

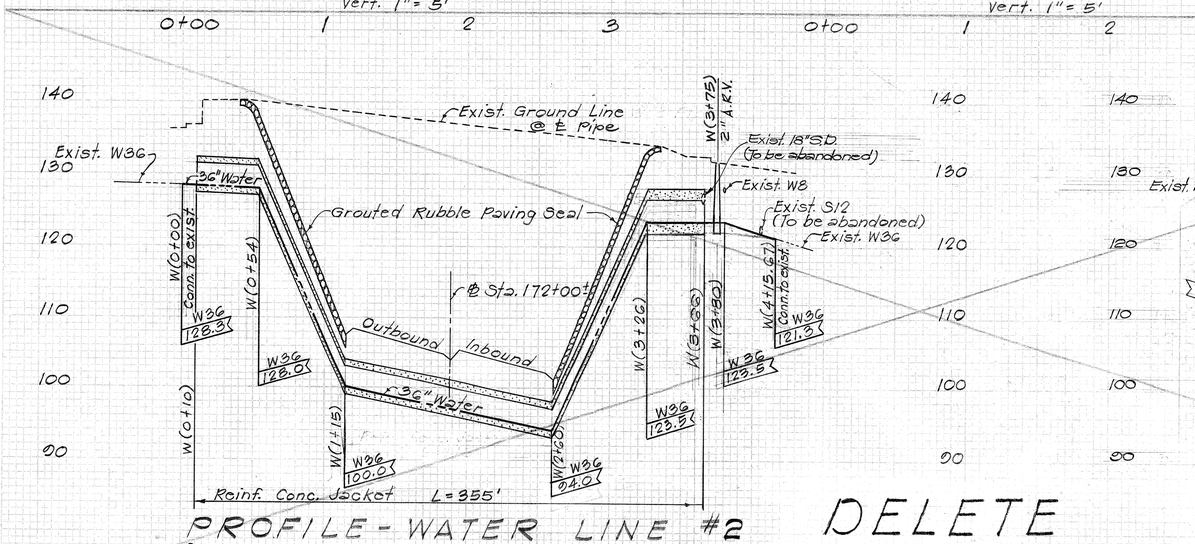

PROFILE - WATER LINE #2
(REALIGNED 36" WATER LINE @ KAAMILO ST.)
Scales: Horiz. 1" = 50'
Vert. 1" = 10'

DELETE

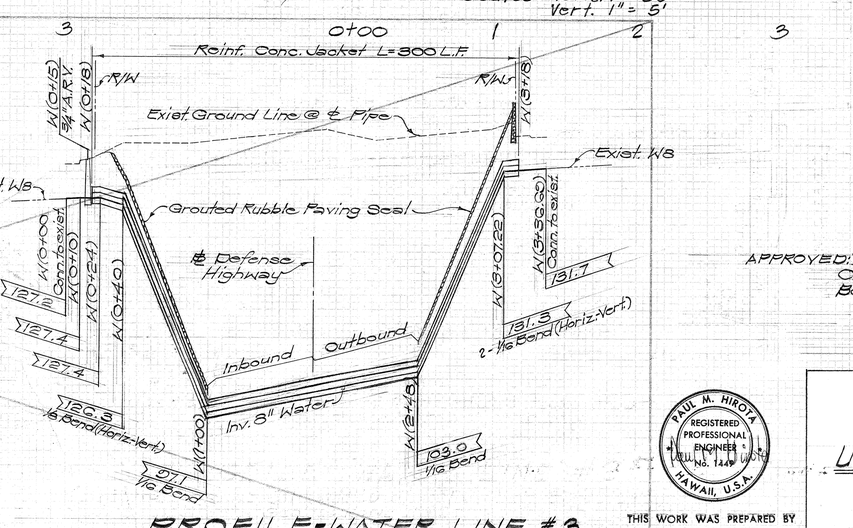

PROFILE-WATER LINE #3
(REALIGNED 8" WATER LINE @ KAAMILO ST.)
Scales: Horiz. 1" = 50'
Vert. 1" = 10'

APPROVED: L. Kawakami 8/1/68
Chief Engineering Division Date
Board of Water Supply

PAUL M. HIROTA REGISTERED PROFESSIONAL ENGINEER No. 1449 HAWAII, U.S.A.

THIS WORK WAS PREPARED BY ME OR UNDER MY SUPERVISION.

STATE OF HAWAII
DEPARTMENT OF TRANSPORTATION
HIGHWAYS DIVISION

UTILITY PROFILE
WATER

INTERSTATE ROUTE H-1
PROJ. NO. I-H1-1(16):11

Scale: As Shown Date: 8/16/68

SHEET No. 6 OF 27 SHEETS

54

FED. ROAD DIST. NO.	STATE	FED. AID PROJ. NO.	FISCAL YEAR	SHEET NO.	TOTAL SHEETS
HAWAII	HAW.	I-H1-(64):12, Unit 2, I-H1-1(16):11	1969	55	128

APPROVED: [signature] 8-19-68
Sewer System Director, Division of Sewers — Date

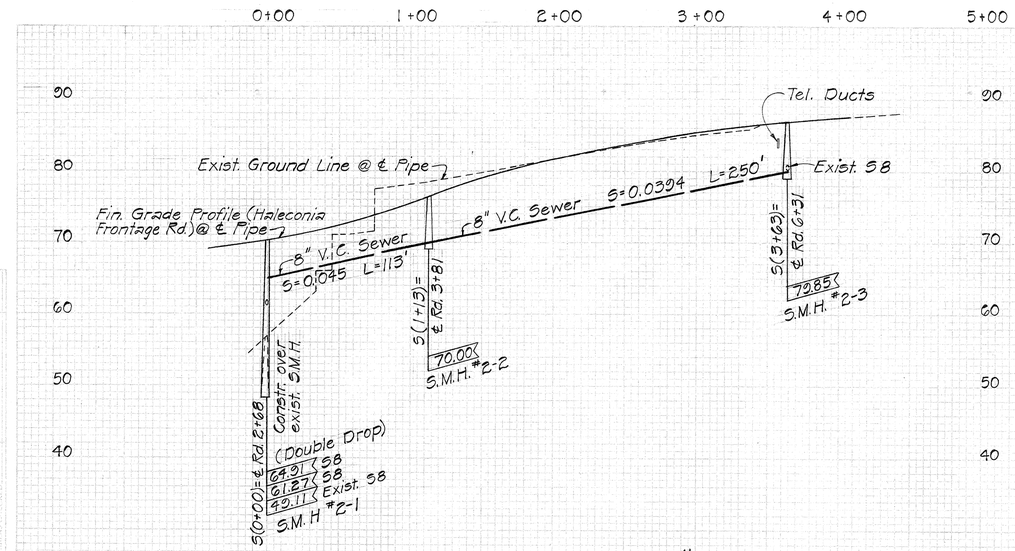

PROFILE - SEWER LINE #2

Scales: Horiz. 1"=50'
Vert. 1"=10'

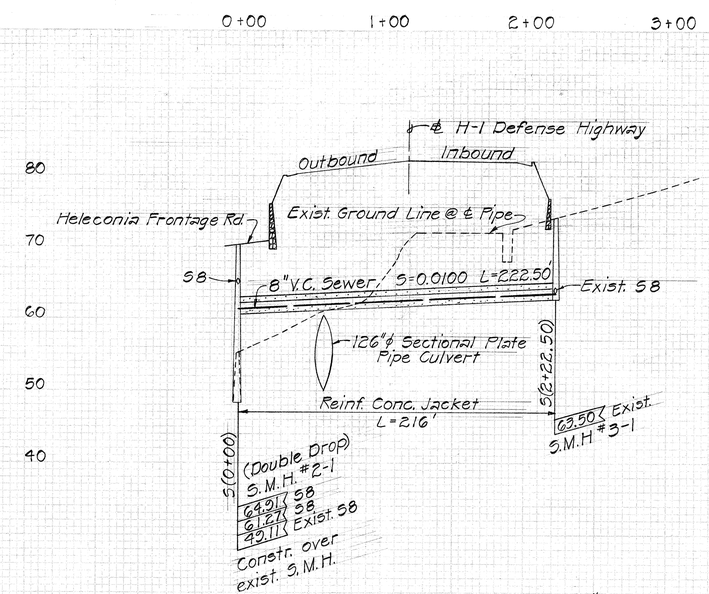

PROFILE - SEWER LINE #3

Scales: Horiz. 1"=50'
Vert. 1"=10'

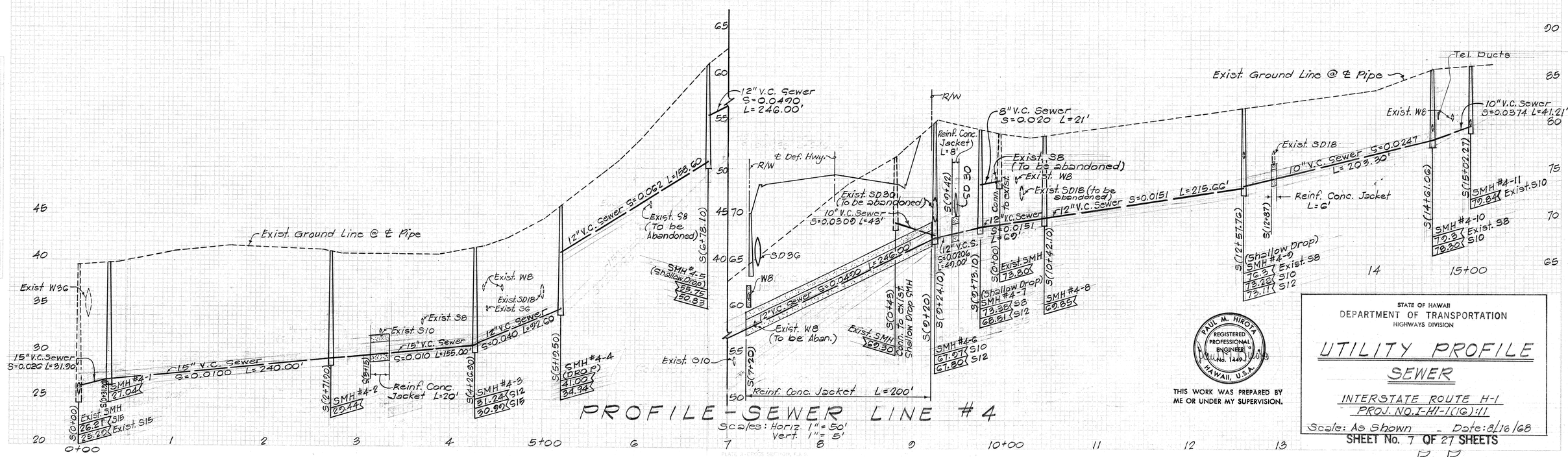

PROFILE - SEWER LINE #4

Scales: Horiz. 1"=50'
Vert. 1"=5'

THIS WORK WAS PREPARED BY ME OR UNDER MY SUPERVISION.

PAUL M. HIROTA — REGISTERED PROFESSIONAL ENGINEER No. 1449 — HAWAII, U.S.A.

STATE OF HAWAII
DEPARTMENT OF TRANSPORTATION
HIGHWAYS DIVISION

UTILITY PROFILE
SEWER

INTERSTATE ROUTE H-1
PROJ. NO. I-H1-1(16):11

Scale: As Shown — Date: 8/16/68

SHEET No. 7 OF 27 SHEETS

55 55

FED. ROAD DIST. NO.	STATE	FED. AID PROJ. NO.	FISCAL YEAR	SHEET NO.	TOTAL SHEETS
HAWAII	HAW.	I-HI-1(6A):12, Unit 2	1969	56	128
		I-HI-1(16):11			

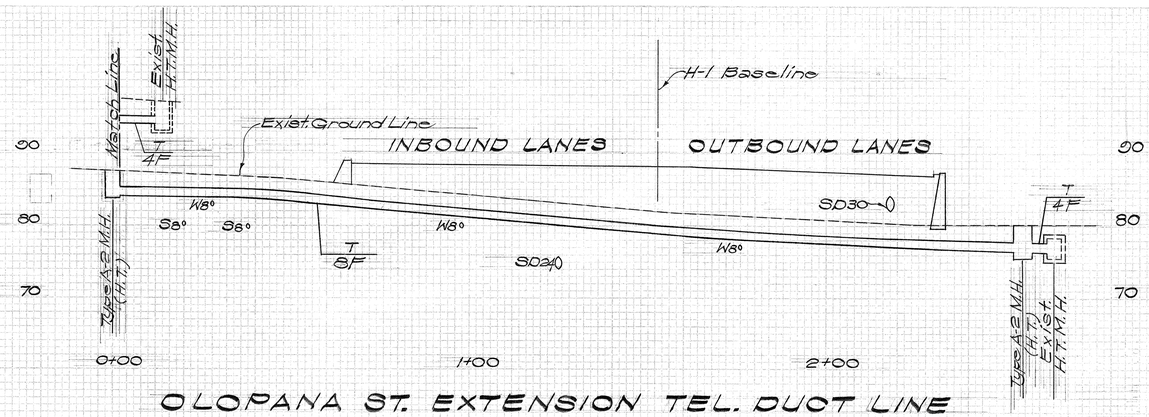

OLOPANA ST. EXTENSION TEL. DUCT LINE

Scale: Horiz. 1"=20'
Vert. 1"=10'

LEGEND FOR CONDUIT	
CONDUIT SIZE	SYMBOL
2"	C
3"	D
4"	F
5"	H

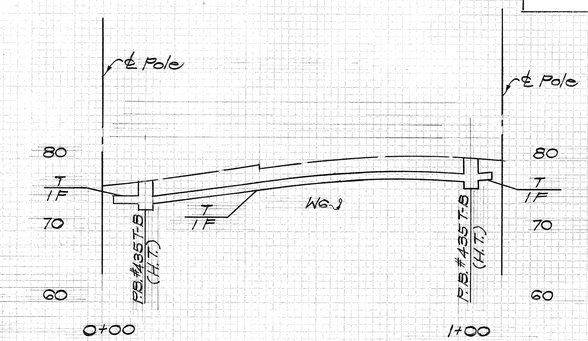

LALANI ST. TEL. DUCT LINE

Scale: Horiz. 1"=20'
Vert. 1"=10'

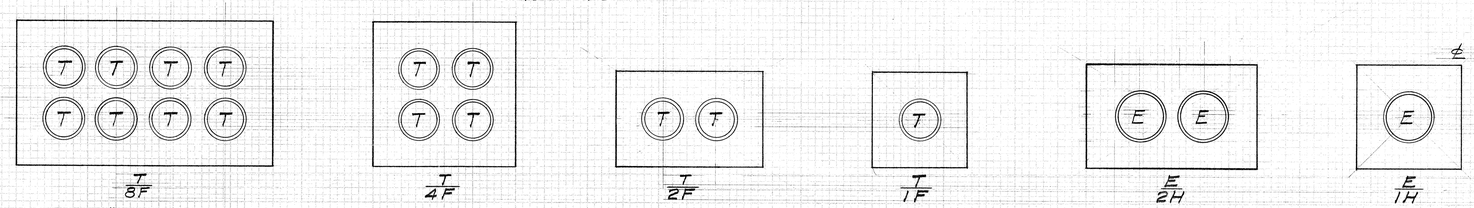

8-4" STYRENE DUCTS (H.T.) | 4-4" STYRENE DUCTS (H.T.) | 2-4" STYRENE DUCTS (H.T.) | 1-4" STYRENE DUCT (H.T.) | 2-5" TRANSITE KORDUCTS (H.E.) | 1-5" TRANSITE KORDUCT (H.E.)

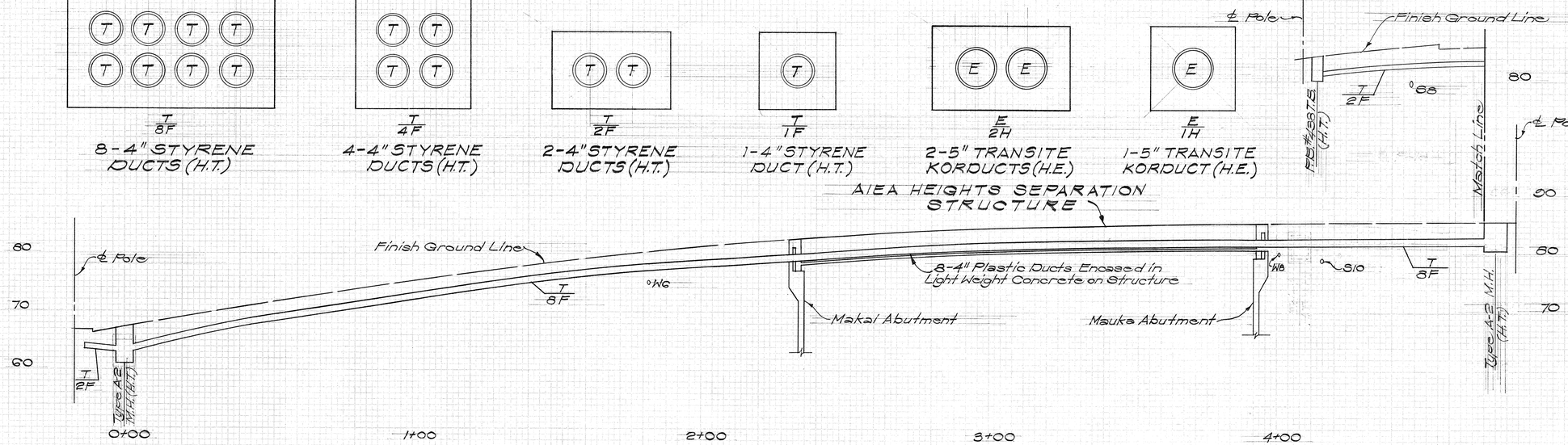

AIEA HEIGHTS DRIVE TELEPHONE DUCT LINE

Scale: Horiz. 1"=20'
Vert. 1"=10'

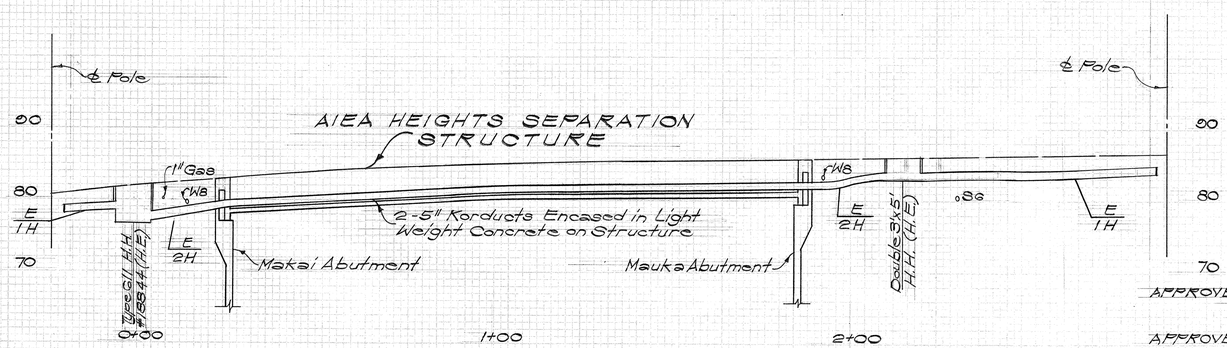

AIEA HEIGHTS DRIVE ELECTRIC DUCT LINE

Scale: Horiz. 1"=20'
Vert. 1"=10'

APPROVED: A D Henderson — Hawaiian Electric Company, Inc. — Date 8-20-68

APPROVED: F. H. Judd — Hawaiian Telephone Company — Date 8-20-68

PAUL M. HIROTA REGISTERED PROFESSIONAL ENGINEER No. 1249 HAWAII, U.S.A.

THIS WORK WAS PREPARED BY ME OR UNDER MY SUPERVISION.

STATE OF HAWAII
DEPARTMENT OF TRANSPORTATION
HIGHWAYS DIVISION

UTILITY PROFILE
ELECTRIC & TELEPHONE

INTERSTATE ROUTE H-1
PROJ. NO. I-HI-1(16):11

Scale: As Shown — Date: 8/16/68

SHEET No. 8 OF 27 SHEETS

56

FED. ROAD DIST. NO.	STATE	FED. AID PROJ. NO.	FISCAL YEAR	SHEET NO.	TOTAL SHEETS
HAWAII	HAW.	I-H1-1(16)12 UNIT 2 I-H1-1(16):11	1969	57	128

GENERAL NOTES:

1. Location of side openings in Type "A" Valve Boxes shall correspond to the location of the valve inlet and valve outlet.
2. When the angle control valve is located in the sidewalk area, the valve shall be located at a sufficient depth so as to allow the cover to be replaced with the valve wide open.
3. Do not imprint "Board of Water Supply" and "Water Meter" on the cast iron cover for the Type III Meter Box.
4. All pipes under the pavement shall be copper.
5. Plugs shall be marked with a 1"x2"x12" redwood marker. Plug and marker shall be considered incidental to the cost for the various items of the sprinkler system.
6. Pipe sleeves shall have an internal diameter of 1/2" greater than the outside diameter of the pipe passing through the sleeve.
7. Final location of meter boxes and valves shall be determined by the Engineer.
8. Pipes shall be galvanized steel and fittings shall be malleable iron unless otherwise called for.
9. When the consumers water service will be interrupted, the Contractor shall notify each consumer and the Board of Water Supply concerning the time and duration of the shut-down.
10. Asterisk (*) indicates work will be performed by the Board of Water Supply. Materials shall be furnished by the Contractor.
11. See Sht. 49 for general water notes.

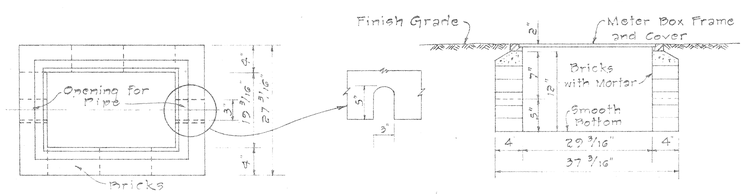

Note:
For details of Type III Cast Iron Frame and Cover, See Sheet No. 59

TYPE III METER BOX

Not to Scale

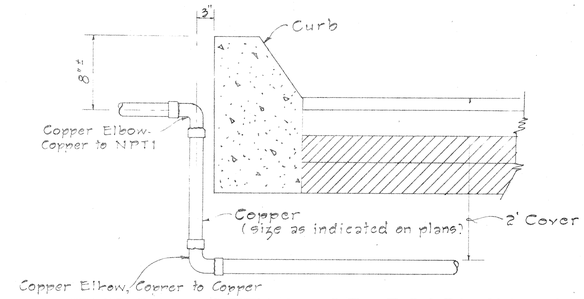

TYPICAL DETAIL OF ROADWAY CROSSING

Not to Scale

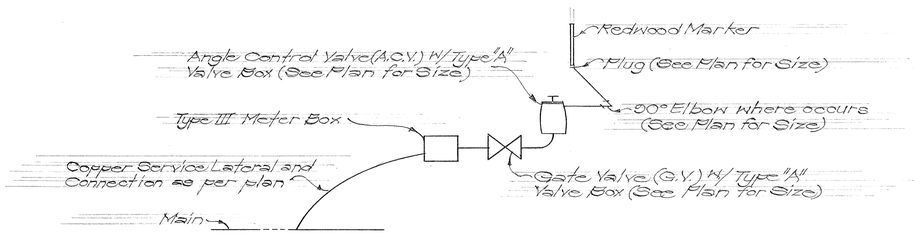

TYPICAL SCHEMATIC SPRINKLER SYSTEM

Not to Scale

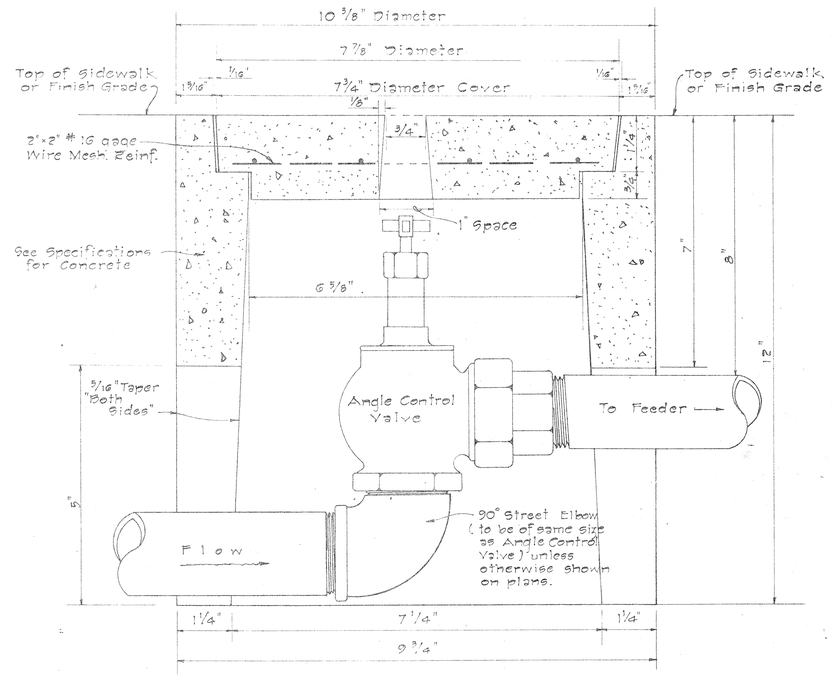

TYPE "A" VALVE BOX

Not to Scale

PAUL M. HIROTA
REGISTERED PROFESSIONAL ENGINEER
No. 1429
HAWAII, U.S.A.

THIS WORK WAS PREPARED BY ME OR UNDER MY SUPERVISION.

STATE OF HAWAII
DEPARTMENT OF TRANSPORTATION
HIGHWAYS DIVISION

MISCELLANEOUS SPRINKLER DETAILS

INTERSTATE ROUTE H-1
PROJ. No. I-H1-1 (16):11

Scale: As Shown Date: 8/10/68

FED. ROAD DIST. NO.	STATE	FED. AID PROJ. NO.	FISCAL YEAR	SHEET NO.	TOTAL SHEETS
HAWAII	HAWAII	I-HI-1(64):12, UNIT 2 I-HI-1(16):11	1969	58	128

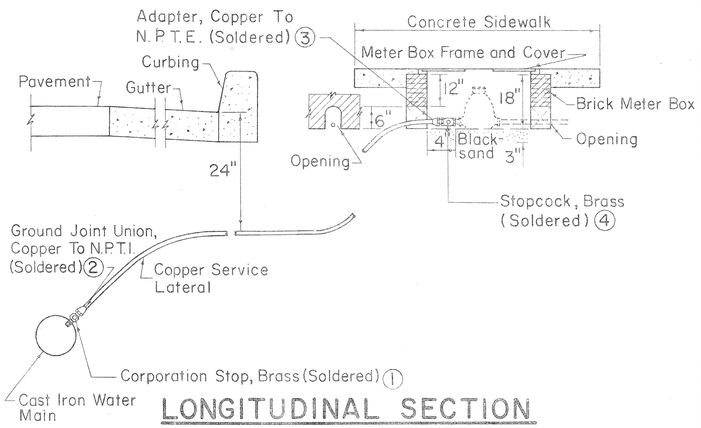

LONGITUDINAL SECTION

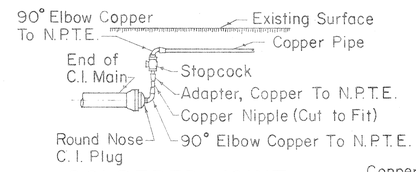

SOLDERED JOINT

SERVICE LATERAL CONNECTION AT END OF LINE

NOTE:

All castings shall be made accurately to the dimensions shown. Seat and cover shall be machined or ground where necessary to secure flat and true surfaces. The cover shall not rattle in any position.

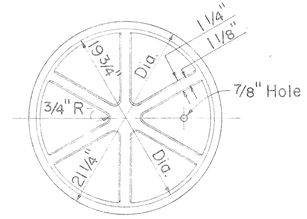

BOTTOM VIEW OF COVER

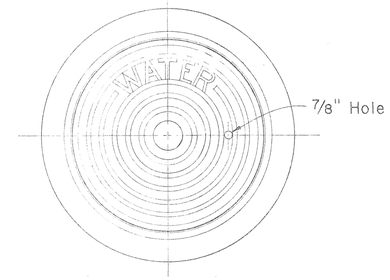

PLAN OF FRAME AND COVER

MANHOLE FRAME & COVER
CAST IRON, 20" SIZE

SCALE: 1-1/2" = 1'-0"

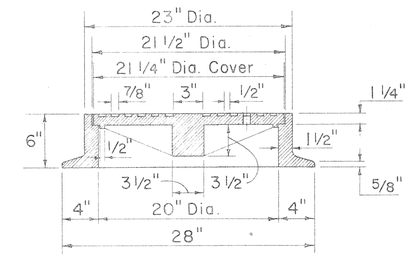

SECTION OF FRAME AND COVER

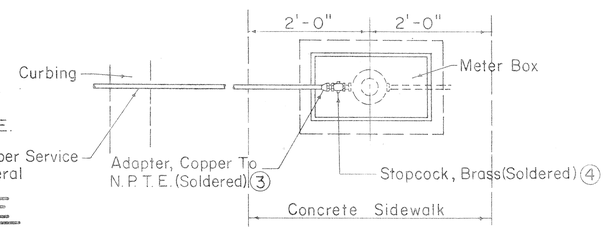

SINGLE SERVICE CONNECTION

SCHEDULE OF COPPER FITTINGS
(SOLDERED JOINT)

ITEM NO.	DESCRIPTION	SINGLE SERVICE CONN.	MULTIPLE SERV. CONN. TWO SERVICES	MULTIPLE SERV. CONN. THREE SERVICES
1	Corporation Stop Brass (H-10003)	1	1	1
2	Ground Joint Union (Style Copper To N.P.T.E. No. C-109)	1	1	1
3	Adapter, Copper To N.P.T.E. (Style No. C-101)	2	1	1
4	Stopcock Brass (B.W.S Standard)	1	1	1
5	Fitting Adapter, (Style Fitting To N.P.T.E. No. C-104)	—	1	1
6	Tee, Copper To Copper To Copper (Style No. T-300)	—	1	1
7	Bushings, Fitting To Copper (Style No. C-103)	—	2	2
8	90° Elbow, Copper To Copper (Style No. C-200)	—	2	2
9	Adapter, Copper To N.P.T.E. (Style No. C-101)	1	2	3
10	Stopcock Brass (B.W.S. Standard)	1	2	3
11	Reducing Tee, Copper To Copper To Copper (Substitute For Items Number 6 and 7). (Style No. T-300)	—	1	1
12	Tee, Copper To Copper To Copper (Style No. T-300)	—	—	1
13	Bushing, Fitting To Copper (Style No. C-103)	—	—	1
14	Reducing Tee, Copper To Copper To Copper (Substitute For Items Number 12 and 13 (Style No. T-300)	—	—	1

NOTE:

Reference Numbers shown thus (H-10003) are from Mueller Co. Catalog "H" and (Style No. T-300) are from Mueller Brass Co. "Streamline" Catalog S-354. Approved Equal may be used.

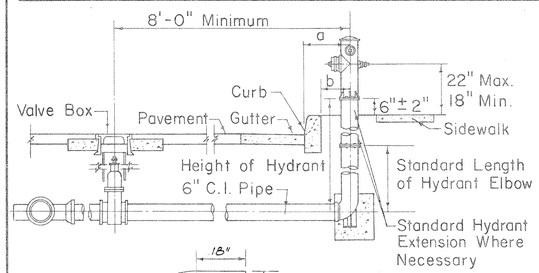

a	20" Min. (Standard Curb)
b	20" Min. (Roll Curb)

NOTE:

Gaskets for flanged joints shall be 1/16 inch duck-inserted rubber packing Garlock No. 19.

Bolts shall be 5/8" diameter x 2 3/4" long steel machine bolts with cut threads, American Standard heavy hexagon heads, galvanized.

Nuts shall be American Standard heavy cold punched hexagon nuts, galvanized.

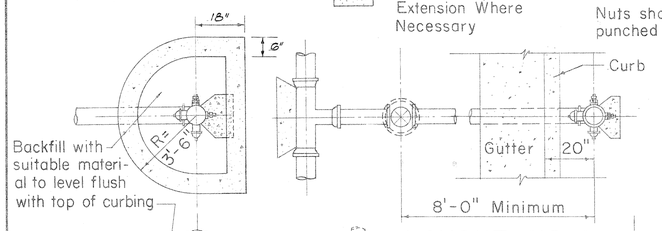

LAYOUT NO. 1

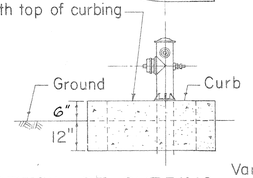

DETAIL OF CURBING AT HYDRANT WHERE REQUIRED

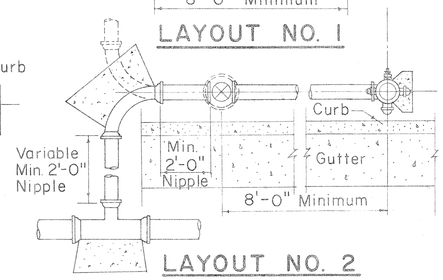

LAYOUT NO. 2

STANDARD FIRE HYDRANT LAYOUT

STANDARD LENGTHS FOR HYDRANT ELBOWS
30"
36"
42"
48"

Standard Hydrant Extensions are available in the following Lengths:

6 to 30 inches long in in increments of 6 inches

TYPE "A" METER BOX

TYPE "B" METER BOX

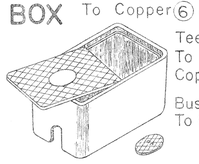

TYPE "X" METER BOX

SERVICE LATERAL SERVICE CONNECTION

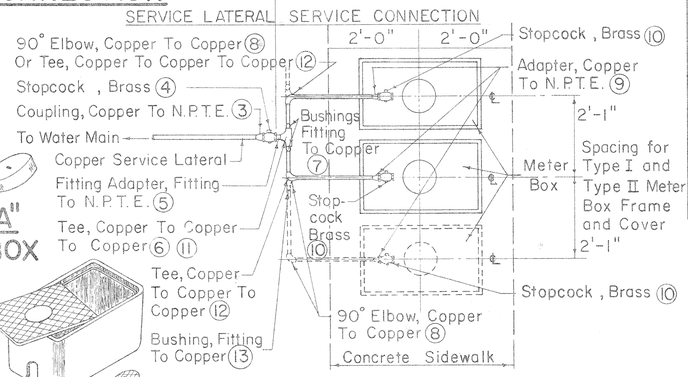

MULTIPLE SERVICE CONNECTION
SOLDERED JOINTS

METER BOX DATA					
TYPE METER BOX	METER SIZES	OVERALL DIMENSIONS AT BOTTOM	OVERALL DIMENSIONS AT TOP	COMPLETE WEIGHT	OVERALL DIMENSIONS OF LID
A	5/8" or 3/4" Without Valve	7 1/4" x 7 1/4"	10" x 10"	45 lbs.	7 3/8" Dia.
B	5/8" or 3/4"	9 1/2" x 16"	12 1/4" x 18 3/8"	82 lbs.	8 3/4" x 14 1/2"
X		14 1/2" x 23 1/2"	16" x 25"	143 lbs.	13 1/8" x 22 1/8"

APPROVED:

L. L. Kamekuni 8/1/68
CHIEF, ENGINEERING DIVISION DATE
BOARD OF WATER SUPPLY

STATE OF HAWAII
DEPARTMENT OF TRANSPORTATION
HIGHWAYS DIVISION
BOARD OF WATER SUPPLY
CITY & COUNTY OF HONOLULU

STANDARD WATER DETAILS

INTERSTATE ROUTE H-1
PROJ. NO. I-HI-1(16):11

Scale: As Noted Date 8/16/68

SHEET NO. 10 OF 27 SHEETS

5 S

LIETZ 1103 ARKWRIGHT TRACING CLOTH 10-60 200P

FED. ROAD DIST. NO.	STATE	FED. AID PROJ. NO.	FISCAL YEAR	SHEET NO.	TOTAL SHEETS
HAWAII	HAWAII	I-H1-1(G4):12, UNIT 2 I-H1-1(IG):11	1969	59	128

NOTE:
Contractor to furnish 1½" brass plug (Tapered thread) to replace corporation stop upon completion of chlorination.

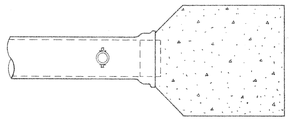

TOP VIEW

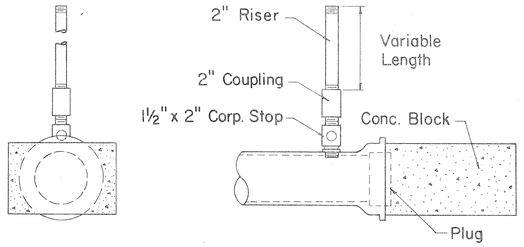

END VIEW

SIDE VIEW

DETAIL OF TEMPORARY 2" CLEANOUT

Not to Scale

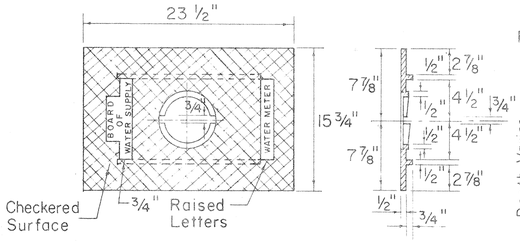

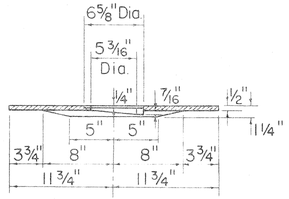

COVER PLATE

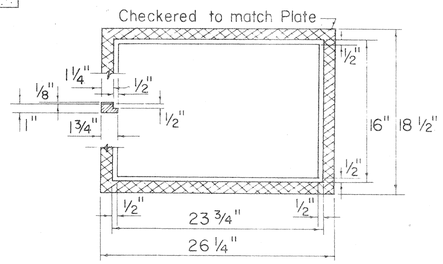

FRAME

CAST IRON FRAME AND PLATE TYPE II

Scale: 1½" = 1'-0"

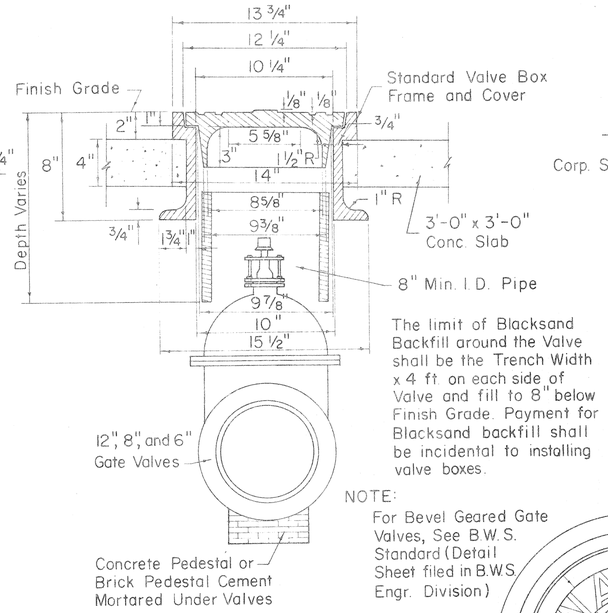

The limit of Blacksand Backfill around the Valve shall be the Trench Width x 4 ft on each side of Valve and fill to 8" below Finish Grade. Payment for Blacksand backfill shall be incidental to installing valve boxes.

NOTE:
For Bevel Geared Gate Valves, See B.W.S. Standard (Detail Sheet filed in B.W.S. Engr. Division)

INSTALLATION OF VALVE BOX FOR GATE VALVES

Not to Scale

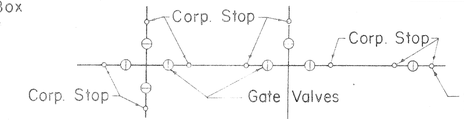

Size of one Corp. Stop given in Table "A". Extra Corp. Stop required at valves located on the "run" shall be 1" x 1¼" for all sizes of pipes and shall be installed as directed by the Engineer.

CORP. STOP LAYOUT

Not to Scale

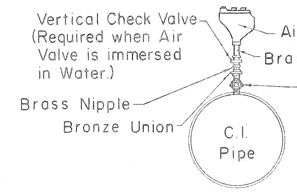

DETAIL OF CONNECTION FOR AIR ELIMINATING TRAP

Not to Scale

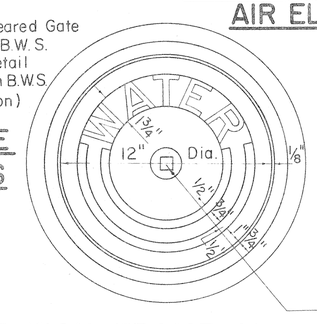

Offset word "WATER" 1¾" high, ⅛" deep

NOTE:
All castings shall be made accurately to the dimensions shown. Seat and Cover shall be ground where necessary to secure flat and true surfaces. The Cover shall not rattle in any position.
Minor changes in dimensions may be made to suit foundry conditions provided such changes are approved by the Board of Water Supply.

CAST IRON FRAME AND COVER

Scale: 3" = 1'-0"

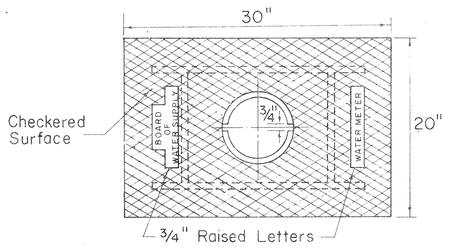

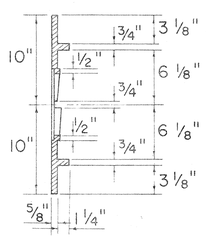

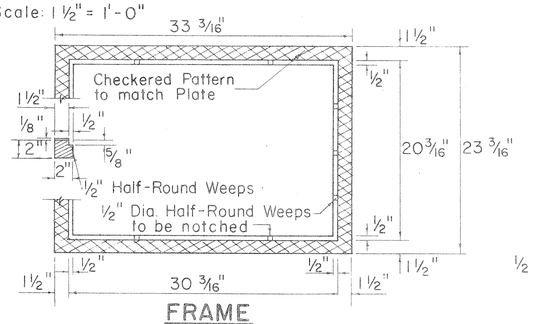

FRAME

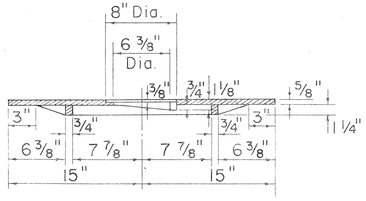

COVER PLATE

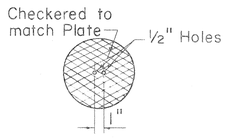

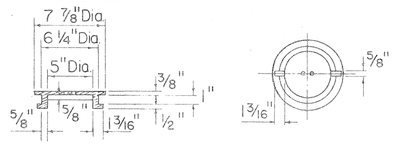

READING COVER

CAST IRON FRAME, PLATE AND COVER TYPE III

Scale: 1½" = 1'-0"

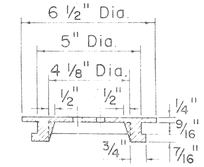

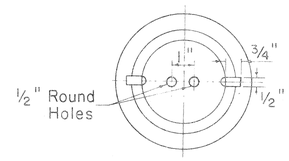

READING COVER

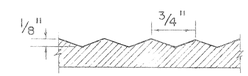

CHECKERED PATTERN

CAST IRON COVER FOR TYPE II FRAME

Not to Scale

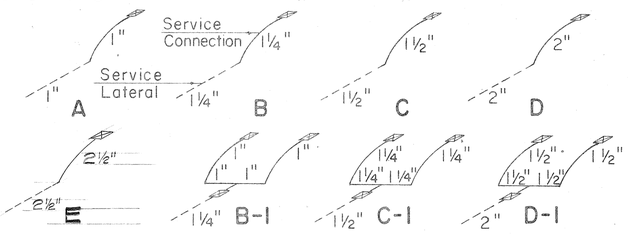

TYPICAL LAYOUT OF SERVICE LATERALS AND CONNECTIONS

Not to Scale

APPROVED:

CHIEF, ENGINEERING DIVISION
BOARD OF WATER SUPPLY

DATE

STATE OF HAWAII
DEPARTMENT OF TRANSPORTATION
HIGHWAYS DIVISION

BOARD OF WATER SUPPLY
CITY & COUNTY OF HONOLULU

STANDARD WATER DETAILS

INTERSTATE ROUTE H-1
PROJ. NO. I-H1-1(IG):11

Scale: As Noted

Date 8/16/68

SHEET NO. 11 OF 27 SHEETS

59

FED. ROAD DIST. NO.	STATE	FED. AID PROJ. NO.	FISCAL YEAR	SHEET NO.	TOTAL SHEETS
HAWAII	HAWAII	I-HI-1(G4):12, UNIT 2 I-HI-1(16):11	1969	60	128

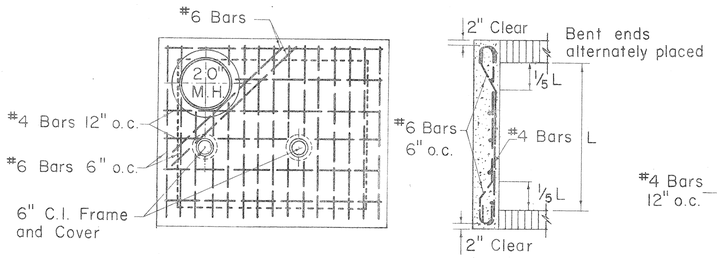

PLAN OF TOP SLAB

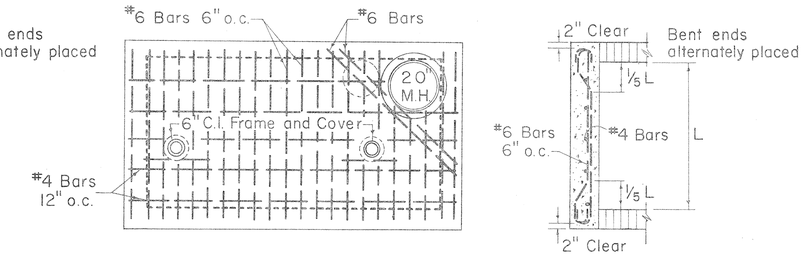

PLAN OF TOP SLAB

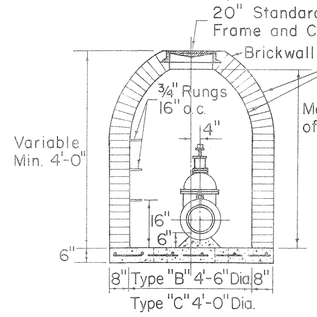

SECTION A-A

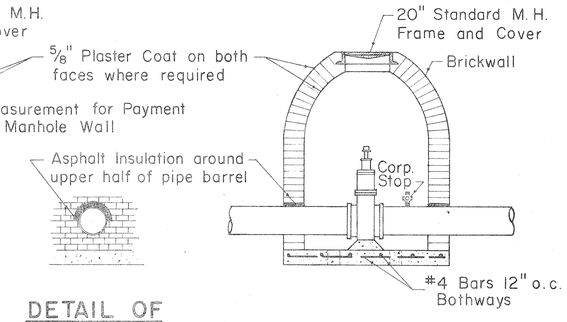

DETAIL OF ASPHALT FILLER

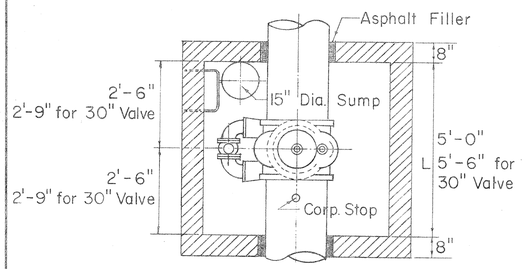

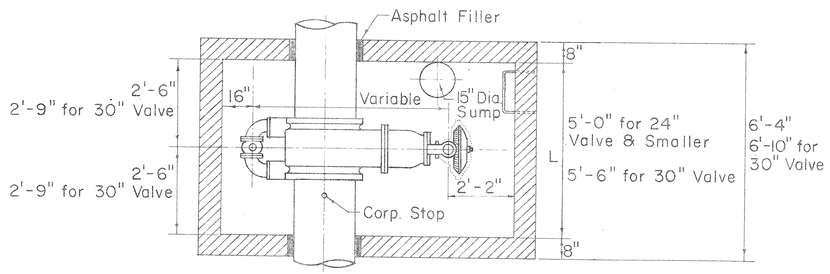

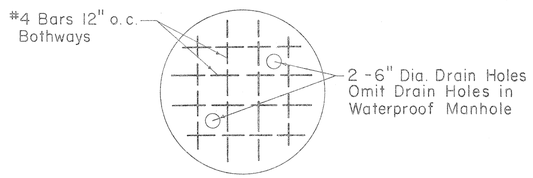

STEEL DETAIL IN BOTTOM SLAB

TABLE "A"

REQUIRED CORPORATION STOP SIZES AT GATE VALVE

DIA. OF MAIN INCHES	SIZE OF CORP. STOP
4	1" x 1¼"
6	1" x 1¼"
8	1" x 1¼"
12	1" x 1¼"
16	1" x 1¼"
20	1" x 1¼"
24	1½" x 2"
36	1½" x 2"
42	1½" x 2"

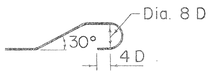

BAR BENDING DETAIL

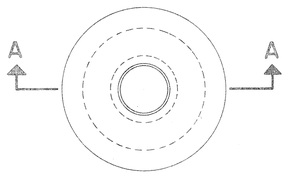

PLAN

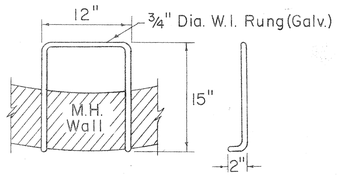

DETAIL OF RUNG

TYPE "B" AND "C" MANHOLES

TYPE "B" 4'-6" DIA. (FOR 12" G.V.)

TYPE "C" 4'-0" DIA. (FOR 6" & 8" G.V.)

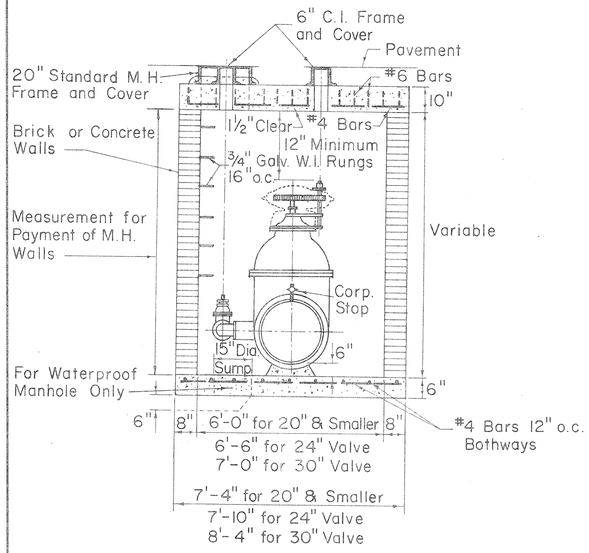

SECTION

TYPE "A" MANHOLE FOR SPUR GEARED GATE VALVES

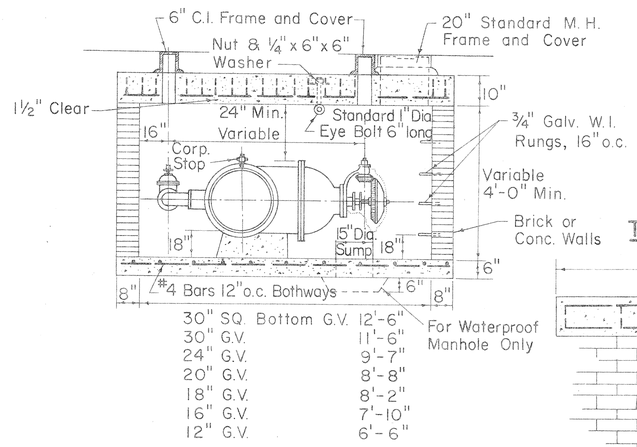

SECTION

TYPE "A" MANHOLE FOR BEVEL GEARED GATE VALVES

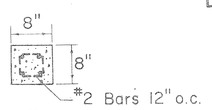

SECTION THRU LINTEL

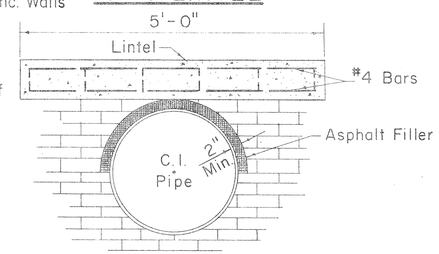

DETAIL OF LINTEL AND ASPHALT FILLER

APPROVED:

J. Kuwabara 8/16/68

CHIEF, ENGINEERING DIVISION — DATE

BOARD OF WATER SUPPLY

STATE OF HAWAII
DEPARTMENT OF TRANSPORTATION
HIGHWAYS DIVISION

BOARD OF WATER SUPPLY
CITY & COUNTY OF HONOLULU

STANDARD WATER DETAILS

INTERSTATE ROUTE H-1
PROJ. NO. I-HI-1(16):11

Not to Scale — Date 8/16/68

SHEET NO. 12 OF 27 SHEETS

60

LIETZ 1103 ARKWRIGHT TRACING CLOTH 10-60 200P

FED. ROAD DIST. NO.	STATE	FED. AID PROJ. NO.	FISCAL YEAR	SHEET NO.	TOTAL SHEETS
HAWAII	HAW.	I-HI-1(64):12, UNIT 2 I-HI-1(16):11	1969	61	128

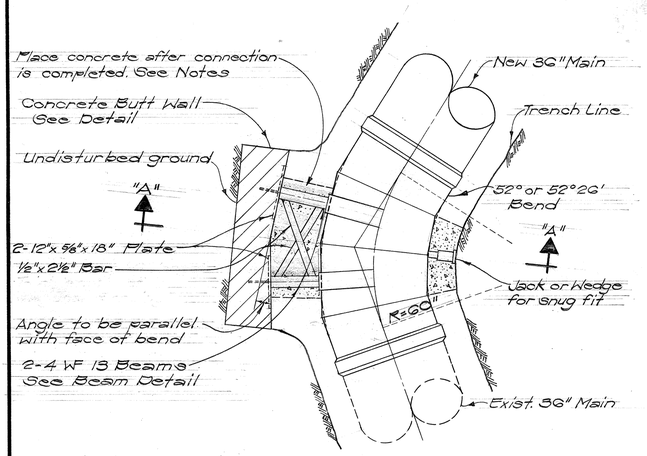

TYPICAL PLAN
Scale: 1/2" = 1'-0"

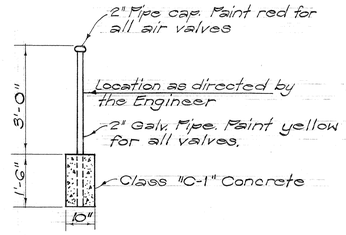

DETAIL OF VALVE MARKER
Scale: 1/2" = 1'-0"

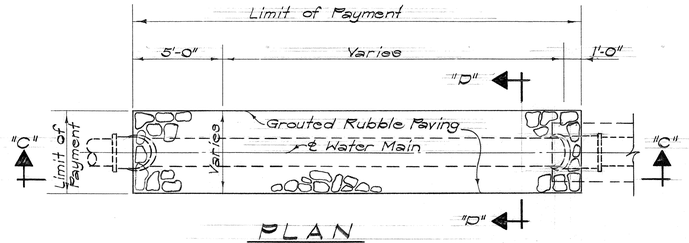

PLAN
Scale: 1/4" = 1'-0"

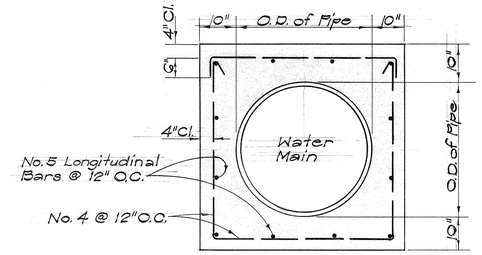

SECTION "E-E"

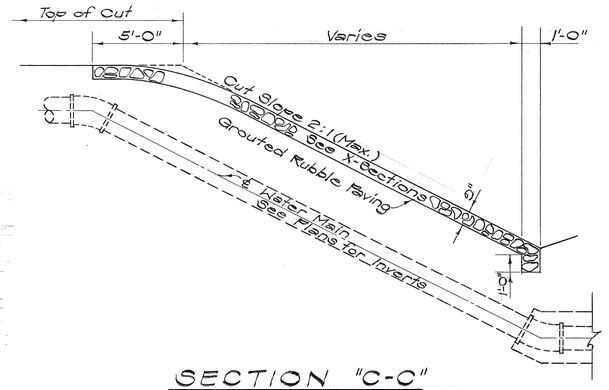

SECTION "C-C"
Scale: 1/4" = 1'-0"

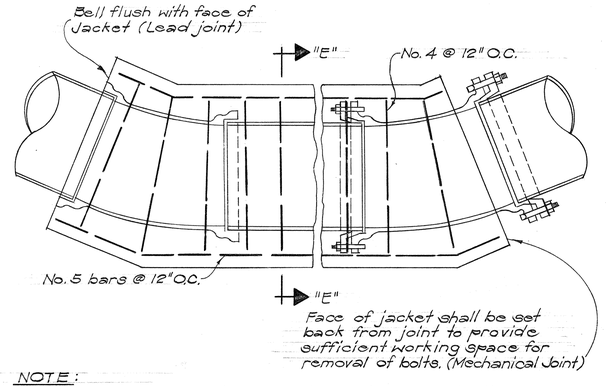

NOTE:
Jacket to be poured after completion of test. 2 1/2" depth of lead for lead joint pipe required at all embedded joints. Wherever construction joints are required 6" rubber or neoprene waterstops shall be installed.

REINFORCED CONCRETE JACKET
Not To Scale

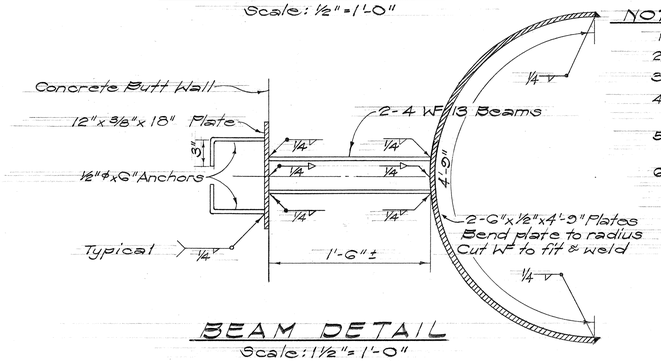

BEAM DETAIL
Scale: 1 1/2" = 1'-0"

NOTES:
1. Design Pressure in 36" @ 150 p.s.i.
2. Minimum cover over reinforcing shall be 3".
3. Concrete shall be Class "B-1".
4. Shaded area to be filled with concrete after connection is completed.
5. Special Concrete Block to be installed only where directed by the Engineer.
6. Payment for structural steel, jack or wedge shall be incidental to Class "B-1" Concrete.

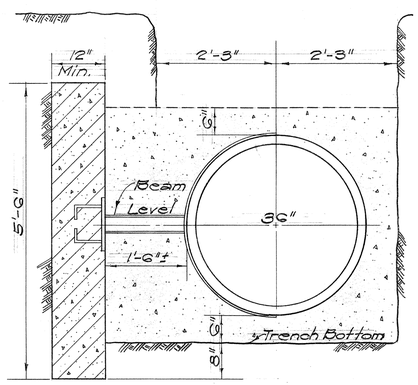

SECTION "A-A"
Scale: 3/4" = 1'-0"

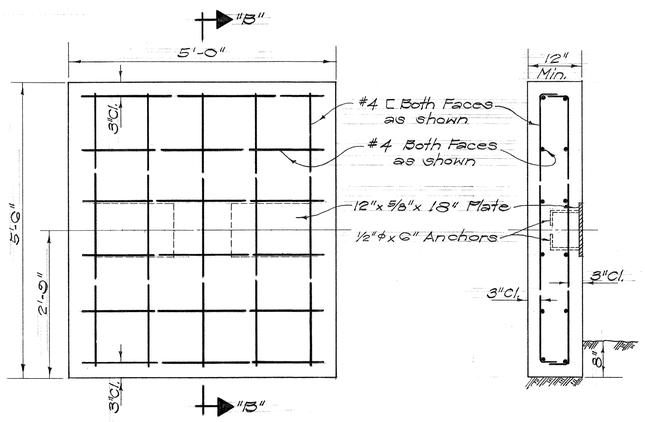

ELEVATION
SECTION "B-B"
CONCRETE BUTT WALL DETAIL
Scale: 3/4" = 1'-0"

DETAIL OF CONCRETE BLOCK
Scale: As Shown

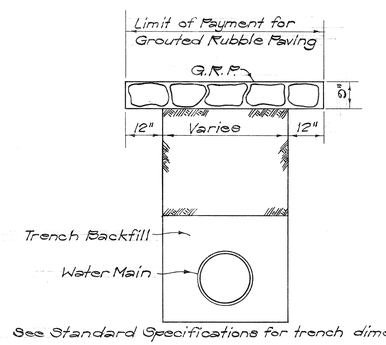

See Standard Specifications for trench dimensions

SECTION "D-D"
Scale: 1/2" = 1'-0"

NOTES:
1. G.R.P. required beyond the limit of payment shall be done at the Contractors own expence.
2. Transverse slopes of G.R.P. to follow cut slope.

TYPICAL DETAIL OF GROUTED RUBBLE PAVING SEAL OVER WATER MAIN
Scale: As Shown

PAUL M. HIROTA
REGISTERED PROFESSIONAL ENGINEER
No. 1449
HAWAII, U.S.A.

THIS WORK WAS PREPARED BY ME OR UNDER MY SUPERVISION.

APPROVED: 8/1/68
Chief, Engineering Division Date
Board of Water Supply

STATE OF HAWAII
DEPARTMENT OF TRANSPORTATION
HIGHWAYS DIVISION

WATER DETAILS

INTERSTATE ROUTE H-1
PROJ. NO. I-HI-1(16):11

Scale As Shown Date 8/12/68

SHEET No. 13 OF 27 SHEETS

ORIGINAL PLAN	SURVEY PLOTTED BY	DATE
	DRAWN BY	
	TRACED BY	
NOTE BOOK	DESIGNED BY	
No.	QUANTITIES BY	
	CHECKED BY	

PRINTED ON NO. 1000H CLEARPRINT

61

FED. ROAD DIST. NO.	STATE	FED. AID PROJ. NO.	FISCAL YEAR	SHEET NO.	TOTAL SHEETS
HAWAII	HAW.	I-HI-1(64)12, UNIT 2 I-HI-1(16)11	1969	62	128

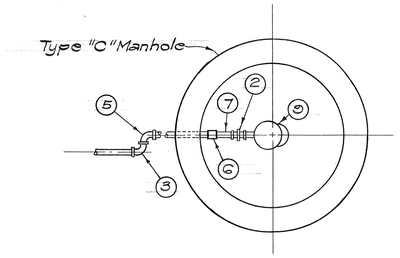

PLAN

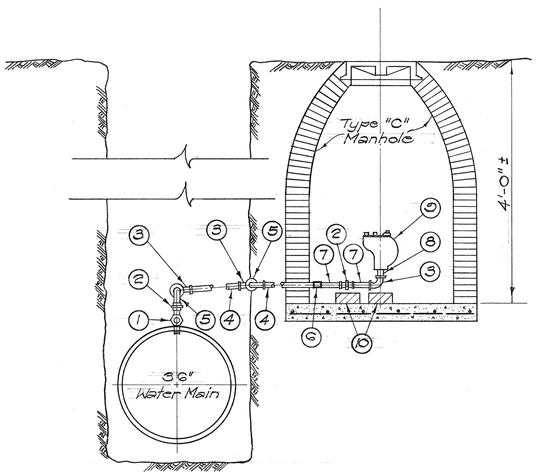

ELEVATION

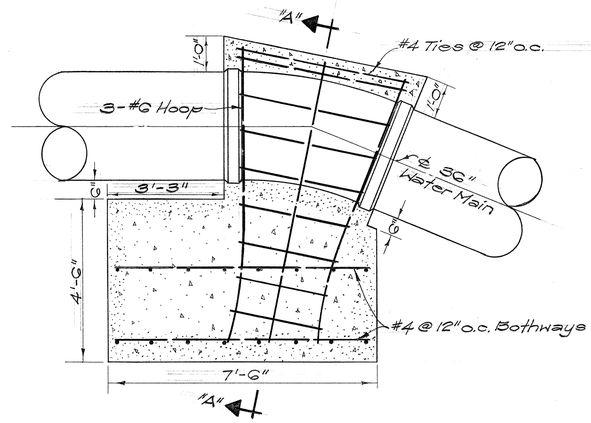

ELEVATION

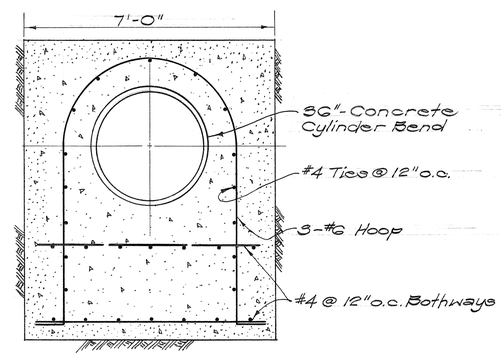

SECTION "A-A"

1. 3" minimum cover for all reinforcing.
2. Design pressure - 150 p.s.i.
3. Approximately 14 c.y. Class "B" Concrete.
4. Concrete block subject to field revision.

CONCRETE BLOCK 36"- TOP VERTICAL BEND

Scale: 1/2" = 1'-0"

NOTE:
Typical Details of Reaction Block with Structural Strut. Details of Actual Block to be used shall be furnished during Construction.

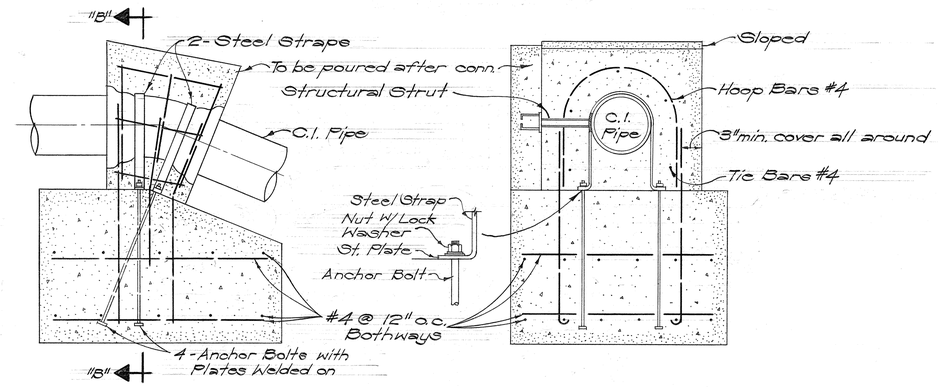

ELEVATION SECTION "B-B"

REINFORCED REACTION BLOCK FOR TOP VERTICAL BENDS

Not to Scale

LIST OF MATERIAL

ITEM	NO. REQ.	DESCRIPTION
1	1	1½"x 2" Corporation Stop
2	2	2" Union, Bronze
3	3	2" 90° Elbow, Bronze
4	2	2" Copper Pipe, Cut to fit
5	2	2" Street Elbow, Bronze
6	1	2" Stop Cock
7	2	2" Dia. x 3" Nipple, Brass
8	1	2" Dia. x 4" Nipple, Brass
9	1	2" Air Valve
10	2	Brick Support

DETAIL OF CONNECTION FOR AIR ELIMINATING VALVE

Scale: 1/2" = 1'-0"

ORIGINAL PLAN		DATE
	SURVEY PLOTTED BY	"
	DRAWN BY	"
	TRACED BY	"
NOTE BOOK	DESIGNED BY	"
	QUANTITIES BY	"
No.	CHECKED BY	"

PAUL M. HIROTA REGISTERED PROFESSIONAL ENGINEER No. 1449 HAWAII, U.S.A.

THIS WORK WAS PREPARED BY ME OR UNDER MY SUPERVISION.

APPROVED: S. Kawakami 8/1/68
Chief, Engineering Division Date
Board of Water Supply

STATE OF HAWAII
DEPARTMENT OF TRANSPORTATION
HIGHWAYS DIVISION

WATER DETAILS

INTERSTATE ROUTE H-1
PROJ. NO. I-HI-1(16)11

Scale: As Shown Date: 8/16/68

SHEET No. 14 OF 27 SHEETS

62

PRINTED ON No. 1000H CLEARPRINT

FED. ROAD DIST. NO.	STATE	FED. AID PROJ. NO.	FISCAL YEAR	SHEET NO.	TOTAL SHEETS
HAWAII	HAW.	I-H1-1(64):12 UNIT 2 I-H1-1(16):11	1969	63	128

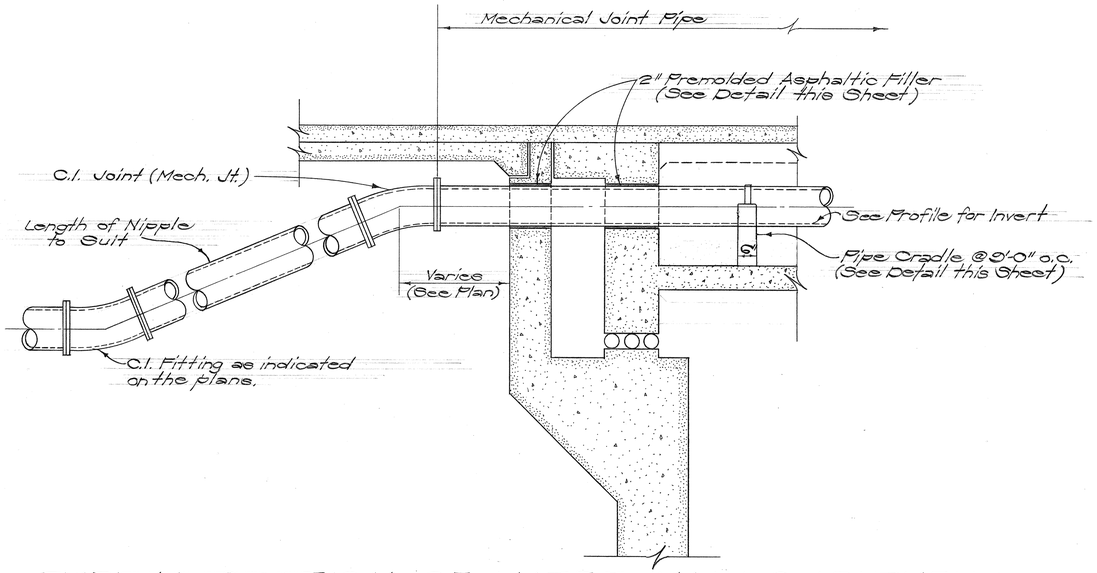

TYPICAL SECTION OF WATER MAIN @ ABUTMENT

Scale: 1/2" = 1'-0"

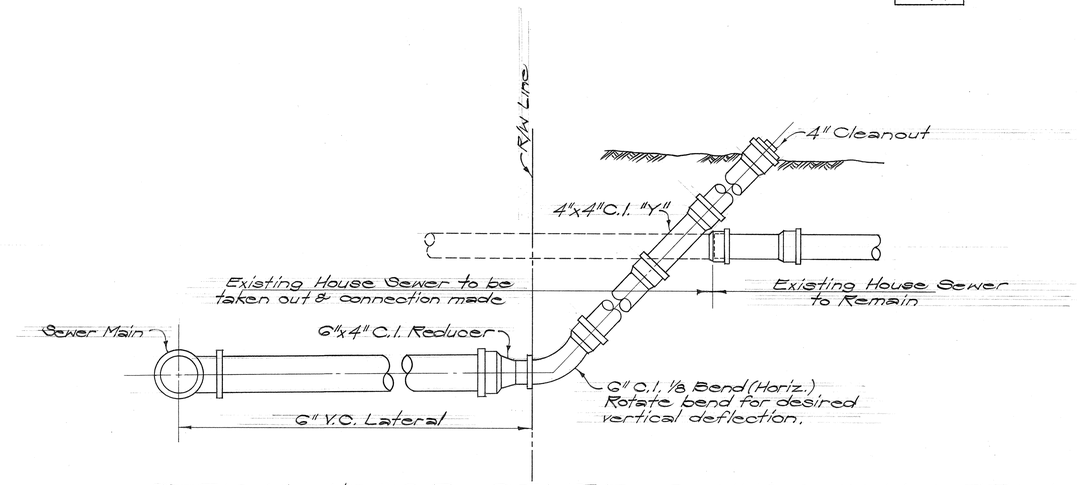

TYPICAL HOUSE SEWER CONNECTION DETAIL

Not to Scale

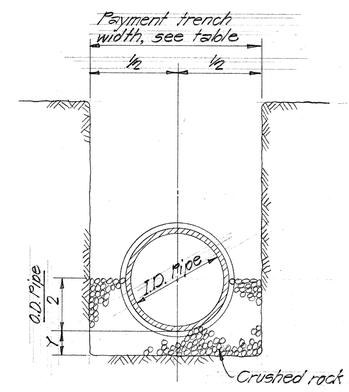

PIPE SIZE	PAYMENT TRENCH WIDTH	CRUSHED ROCK CRADLE "Y" (MIN.)	CY/LF
6"	24"	4"	.042
8"	24"	4"	.045
10"	24"	4"	.047
12"	30"	5"	.079
16"	38"	6"	.114
18"	41"	6"	.130
21"	45"	7"	.163
24"	50"	8"	.204
27"	53"	9"	.238
30"	57"	10"	.280

NOTE: Payment width of cradle shall be payment trench width.

ROCK CRADLE FOR VITRIFIED CLAY PIPE

N.T.S.

NOTE:
All exposed metal surfaces shall be given one shop coat of approved primer and final coat of rust preventive (metal gray) paint approved by the Engineer.

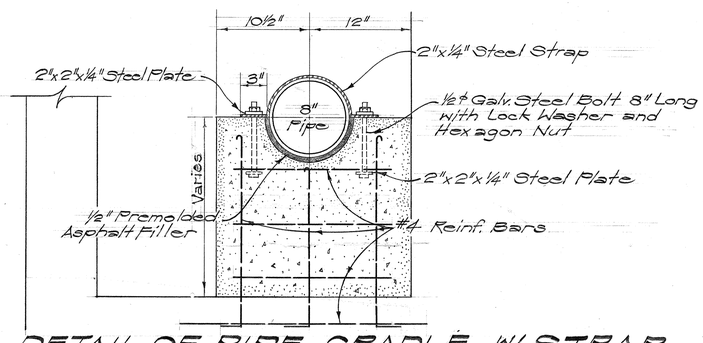

DETAIL OF PIPE CRADLE W/ STRAP

Scale: 1 1/2" = 1'-0"

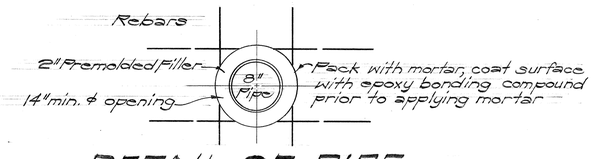

DETAIL OF PIPE THRU ABUTMENT

Scale: 1" = 1'-0"

ORIGINAL PLAN	SURVEY PLOTTED BY	DATE
	DRAWN BY	"
	TRACED BY	"
NOTE BOOK	DESIGNED & BY	"
	QUANTITIES BY	"
No.	CHECKED BY	"

PAUL M. HIROTA
REGISTERED PROFESSIONAL ENGINEER
No. 1449
HAWAII, U.S.A.

THIS WORK WAS PREPARED BY ME OR UNDER MY SUPERVISION.

APPROVED: [signature] 8-12-68
for Sewer System Director, Division of Sewers — Date

APPROVED: [signature] 8/16/68
Chief, Engineering Division, Board of Water Supply — Date

STATE OF HAWAII
DEPARTMENT OF TRANSPORTATION
HIGHWAYS DIVISION

SEWER & WATER DETAILS

INTERSTATE ROUTE H-1
PROJ. NO. I-H1-1(16):11

Scale: As Shown — Date: 8/16/68

SHEET No. 15 OF 27 SHEETS

63

PRINTED ON NO. 1000H CLEARPRINT

FED. ROAD DIST. NO.	STATE	FED. AID PROJ. NO.	FISCAL YEAR	SHEET NO.	TOTAL SHEETS
HAWAII	HAWAII	I-H1-1(64):12, UNIT 2 I-H1-1(16):11	1969	64	128

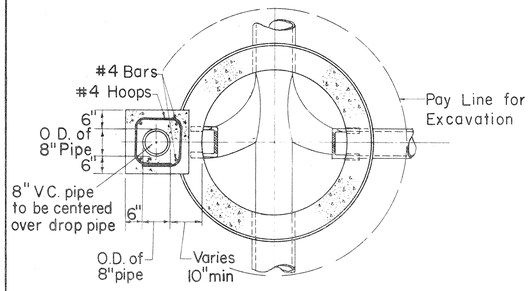

SECTION A-A

Scale: 1/2" = 1'-0"

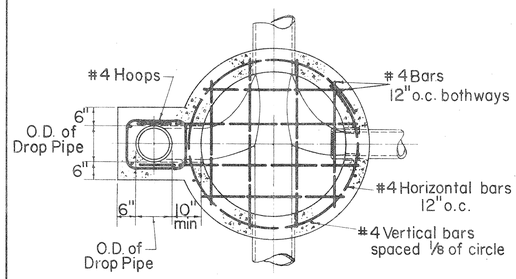

SECTION B-B

Scale: 1/2" = 1'-0"

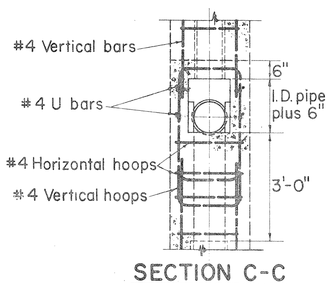

SECTION C-C

Scale: 1/2" = 1'-0"

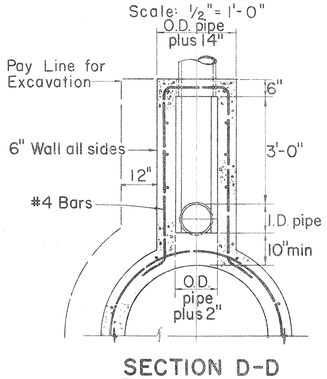

SECTION D-D

Scale: 1/2" = 1'-0"

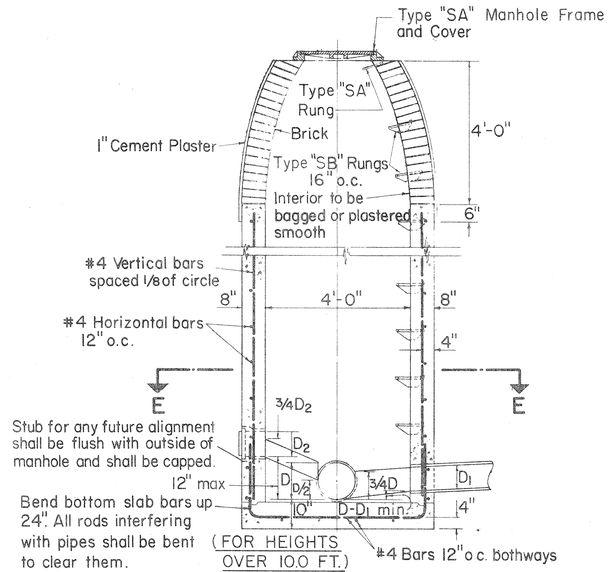

PLAIN MANHOLE

Scale: 1/2" = 1'-0"

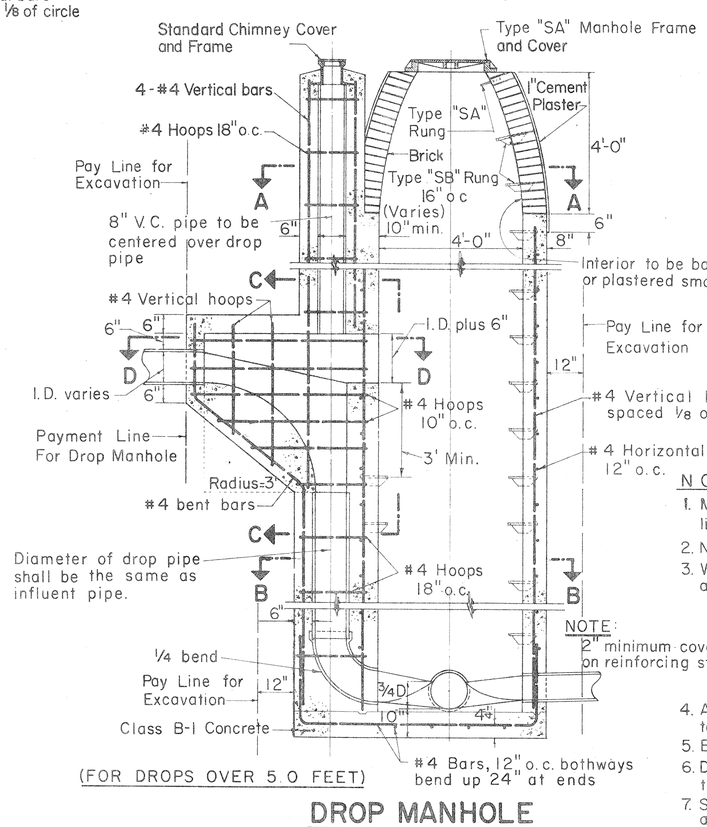

(FOR DROPS OVER 5.0 FEET)

DROP MANHOLE

Scale: 1/2" = 1'-0"

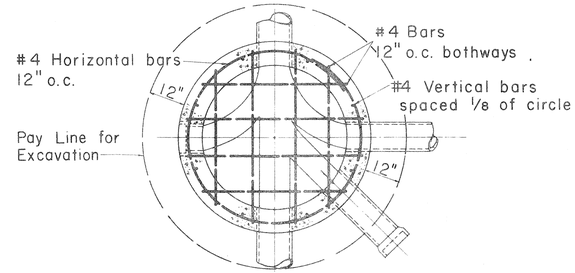

SECTION E-E

Scale: 1/2" = 1'-0"

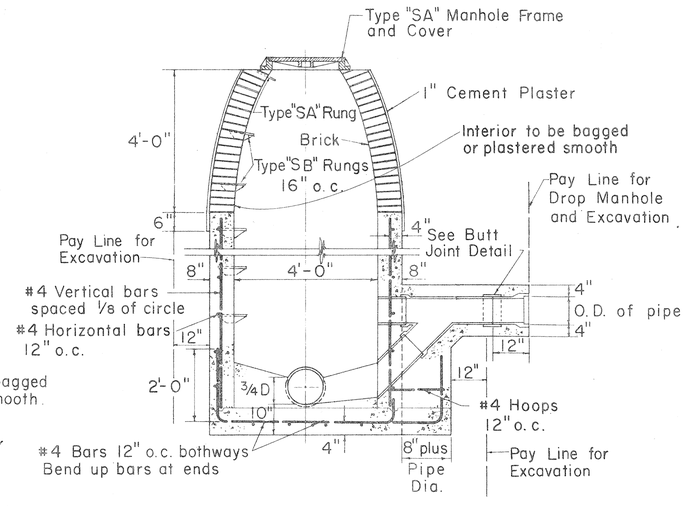

(FOR DROPS UNDER 5.0 FEET)

SHALLOW DROP MANHOLE

Scale: 1/2" = 1'-0"

NOTE:

Reinforced concrete manhole walls (See detail of plain manhole) shall be used for portions below the water table.

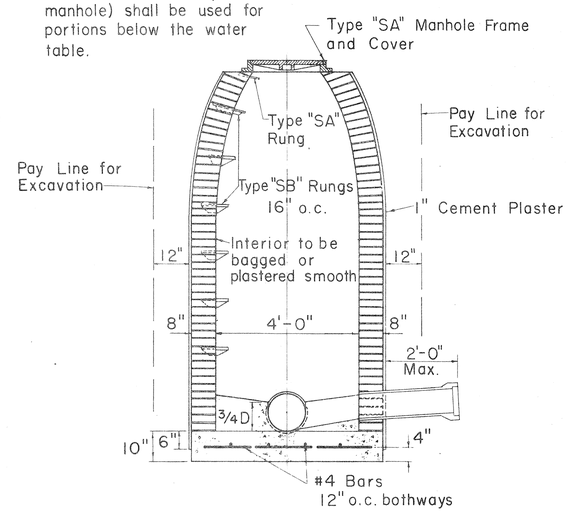

(MAXIMUM HEIGHT - 10.0 FEET)

BRICK MANHOLE

Scale: 1/2" = 1'-0"

Payment for excavation for manholes shall be made under unit price for trench excavation and shall be measured to one foot outside of walls from original ground elevation to authorized bottom elevation.

Payment for manhole walls (brick, or cast-in-place concrete) shall include brick, mortar, concrete, reinforcing steel, cast-iron steps, galvanized wrought iron rungs, and plastering.

NOTE:

1. Manhole rungs shall not be aligned above any flow line except in drop manhole.
2. No rungs shall be installed in manholes less than 3' high.
3. When not otherwise noted, manhole stubs shall be sloped as follows:

Pipe Size	Rise Per Foot
6"	1/8"
8"	3/32"
10"	1/16"
12"	1/16"

4. All reinforcing rods interfering with pipes shall be bent to clear them.
5. Bar lap to be 40 diameters in length.
6. Data for special manholes not shown shall be similar to that for plain manholes.
7. Size of drop pipe in all Drop Manholes shall be same as influent line.
8. Manhole wall to be of reinforced concrete to height 1' above normal ground water table.
9. All pipes entering or leaving manholes shall have a joint within 2'-0" of the manhole wall.

APPROVED:

for SEWER SYSTEM DIRECTOR, DIVISION OF SEWERS — DATE 8-7-68

STATE OF HAWAII
DEPARTMENT OF TRANSPORTATION
HIGHWAYS DIVISION
DIVISION OF SEWERS
CITY & COUNTY OF HONOLULU

STANDARD DETAILS

SEWERS - DROP MANHOLE AND BRICK MANHOLE DETAILS

Scales: As Noted — Date: 8/16/68

SHEET NO. 16 OF 27 SHEETS

64

Revised Oct 1965

IMPERIAL 138 K&E CO., N.Y. TRADE MARK

FED ROAD DIST NO	STATE	FED AID PROJ NO	FISCAL YEAR	SHEET NO	TOTAL SHEETS
HAWAII	HAWAII	T-HI-(64):12 UNIT 2 T-HI-(66):11	1969	65	128

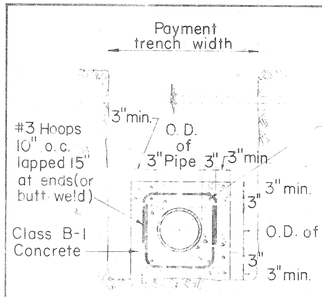

DETAIL OF CONCRETE JACKET

Scale: 3/4" = 1'-0"

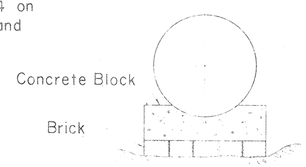

METHOD OF USING BRICKS UNDER CONCRETE BLOCKS

Not To Scale

Contractor shall set Concrete Blocks on undisturbed ground. Where ground is too low, the contractor shall not heap up dirt under the Concrete Block but use Concrete Bricks to take up the deficiency, scraping away beneath Concrete Block to give sufficient room for Brick

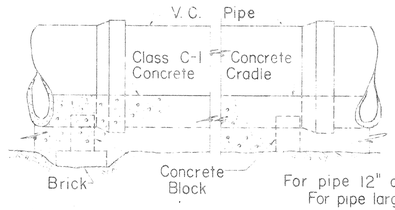

ELEVATION SHOWING METHOD OF LAYING PIPE

Not To Scale

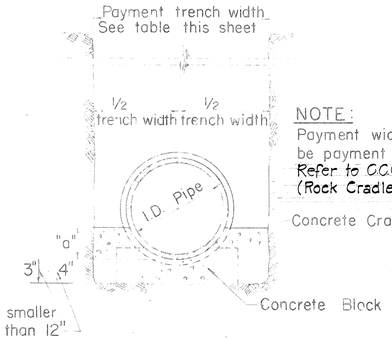

NOTE:
Payment width of cradle shall be payment trench width.
Refer to C.C.O. #5. See detail, sht. no. 63. (Rock Cradle for Vitrified Clay Pipe)

CONCRETE CRADLE FOR VITRIFIED CLAY PIPE

Not To Scale

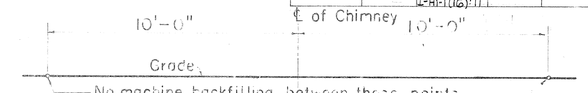

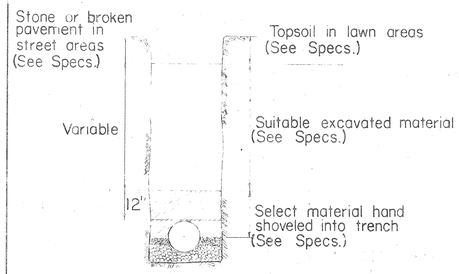

METHOD OF BACKFILL

Not To Scale

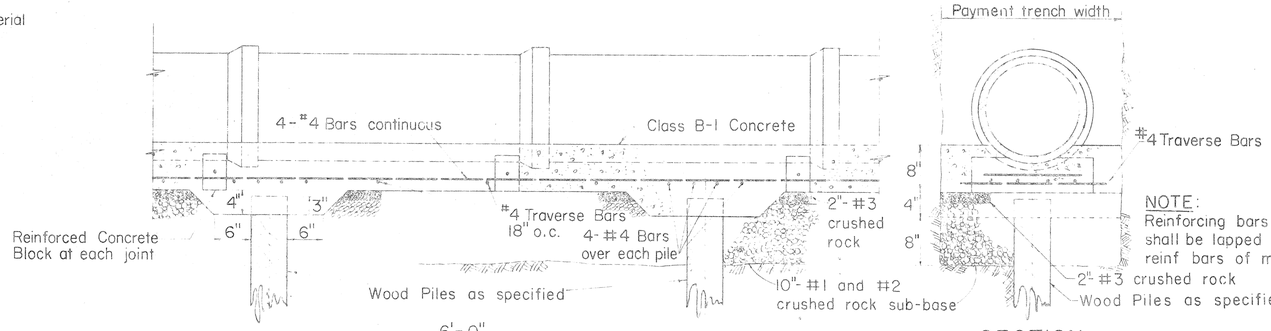

Scale: 1" = 1'-0"

SECTION

NOTE:
Reinforcing bars of laterals shall be lapped 40 dia. to reinf bars of mains.

DETAIL OF REINFORCED CONCRETE CRADLE ON WOOD PILES

(FOR 6, 8, 10 & 12 IN. V.C. PIPE)

DETAIL OF REINFORCED CONCRETE CRADLE WITHOUT PILES SIMILAR EXCEPT FOR WOOD PILES AND PILE CAPS

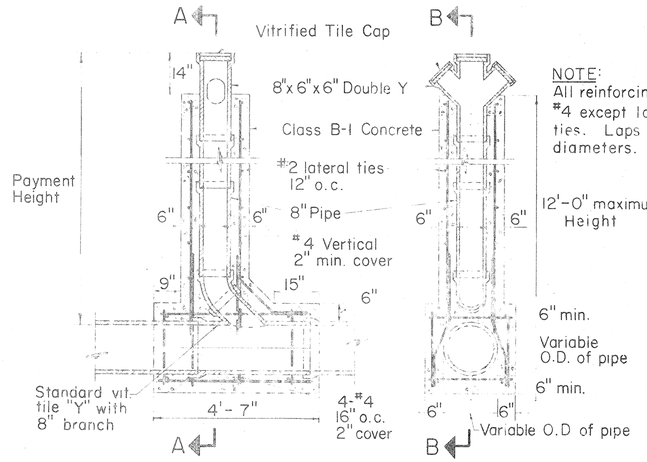

NOTE:
All reinforcing rods #4 except lateral ties. Laps 40 diameters.

SECTION B-B SECTION A-A

DETAILS OF CHIMNEY

Scale: 1/2" = 1'-0"

Payment quantities for trench excavation, crushed rock fill, crushed rock cradle, and crushed rock sub-base shall be computed using payment trench widths as shown in the table of "Trench Widths". No payment shall be made for excess quantities resulting from trench widths greater than the payment trench widths shown.

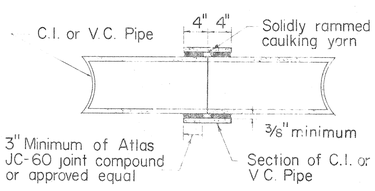

BUTT JOINT DETAIL

Scale: 1" = 1'-0"

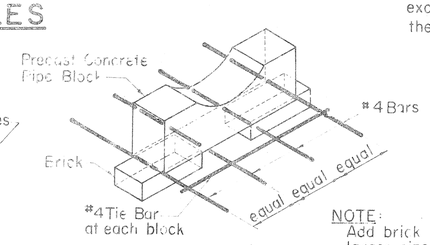

NOTE:
Add brick for larger size pipe

Not To Scale

ALTERNATE DETAIL OF CONC. PIPE BLOCK FOR REINF. CRADLE

VITRIFIED CLAY PIPE TABLE				
TRENCH WIDTHS		DIM. OF CONC. CRADLE		
PIPE SIZE	PAY. WIDTH	PIPE SIZE	"a"	WIDTH
6"	24"	6"	3"	24"
8"	24"	8"	3"	24"
10"	24"	10"	3"	24"
12"	30"	12"	3"	30"
15"	38"	15"	4"	38"
18"	41"	18"	5"	41"
21"	45"	21"	5"	45"
24"	50"	24"	6"	50"
27"	53"	27"	7"	53"
30"	57"	30"	7"	57"

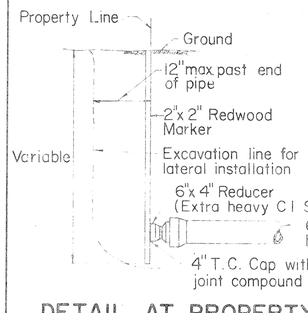

DETAIL AT PROPERTY LINE

NOTE: Permission is to be secured from property owner before construction at property line is started.
To avoid cutting of short nipple, 6" pipe may extend a maximum of 12" into the property to be served.

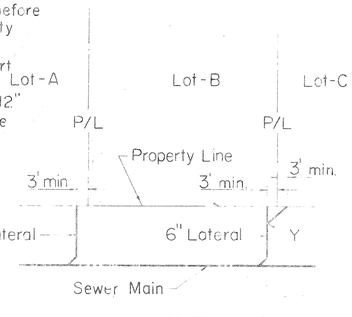

LAYOUT

CONSTRUCTION OF LATERALS

Not To Scale

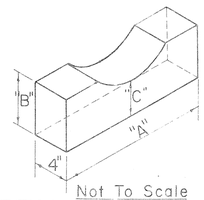

Not To Scale

DETAIL OF PRECAST CONC. PIPE BLOCK

CONCRETE BLOCK DIMENSIONS			
PIPE SIZE	"A"	"B"	"C"
6"	1'-2"	6"	3"
8"	1'-5"	6"	3"
10"	1'-7"	6"	3"
12"	1'-7"	6"	3"
15"	1'-8"	6"	4"
18"	1'-9"	6"	4"
21"	1'-10"	6"	4"
24"	1'-11"	6"	4"
27"	2'-0"	6"	4"
30"	2'-3"	6"	4"

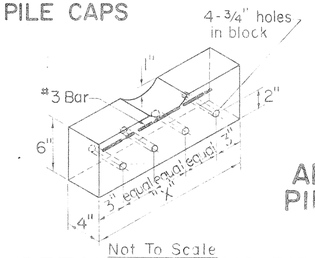

Not To Scale

DETAIL OF CONC. PIPE BLOCK FOR REINF. CRADLE

DIM. OF REINF. CONC. BLOCK	
PIPE SIZE	"X"
6"	1'-6"
8"	1'-6"
10"	1'-8"
12"	1'-8"
15"	1'-10"
18"	1'-10"
21"	1'-10"
24"	2'-0"
27"	2'-0"
30"	2'-0"

APPROVED:

for [illegible] 8/7 — SEWER SYSTEM DIRECTOR, DIVISION OF SEWERS

8-9-68 DATE

STATE OF HAWAII
DEPARTMENT OF TRANSPORTATION
HIGHWAYS DIVISION
DIVISION OF SEWERS
CITY & COUNTY OF HONOLULU

STANDARD DETAILS

SEWERS - CONCRETE JACKET & MISCELLANEOUS DETAILS

Scales: As Noted — Date: 8/16/68

SHEET NO. 17 OF 27 SHEETS

65

FED. ROAD DIST. NO.	STATE	FED. AID PROJ. NO.	FISCAL YEAR	SHEET NO	TOTAL SHEETS
HAWAII	HAWAII	I-HI-1(64):12 UNIT 2 / I-HI-1(16):11	1960	66	128

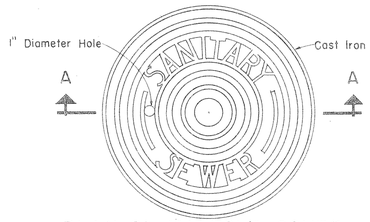

PLAN OF MANHOLE COVER
Scale: 1 1/2" = 1'-0"

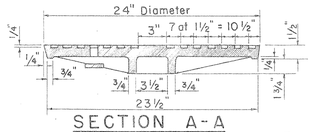

SECTION A-A
Scale: 1 1/2" = 1'-0"

NOTE:
This cover is used with the "SA" or "SD" frame

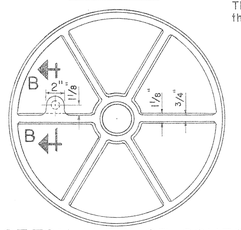

BOTTOM VIEW OF COVER
Scale: 1 1/2" = 1'-0"

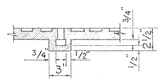

SECTION B-B

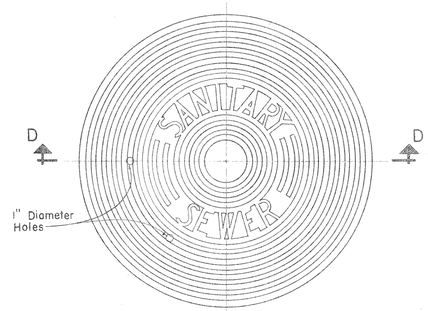

PLAN
SPECIAL MANHOLE COVER
Scale: 1 1/2" = 1'-0"

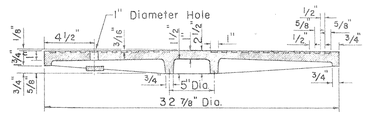

SECTION D-D
Scale: 1 1/2" = 1' 0"

Approx. Weight 260 Pounds

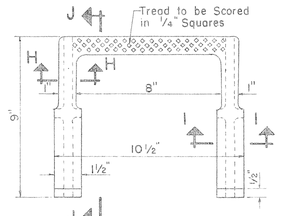

PLAN

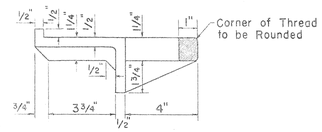

SECTION J-J

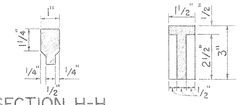

SECTION H-H

SECTION I-I

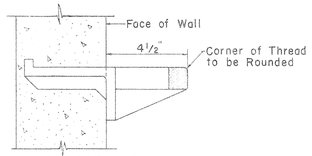

METHOD OF INSTALLATION

TYPE "SB" MANHOLE RUNGS (CAST IRON)
Scale: 3" = 1'-0"

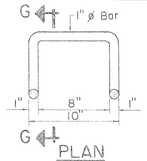

PLAN

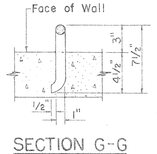

SECTION G-G

TYPE "SA" MANHOLE RUNGS (WROUGHT IRON)
Scale: 1 1/2 = 1'-0"

PLAN OF COVER

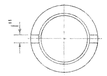

BOTTOM OF COVER

ELEVATION

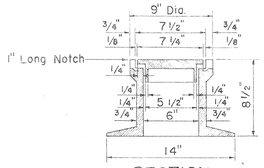

SECTION

DROP MANHOLE CHIMNEY CASTINGS
Scale: 1 1/2" = 1'-0"

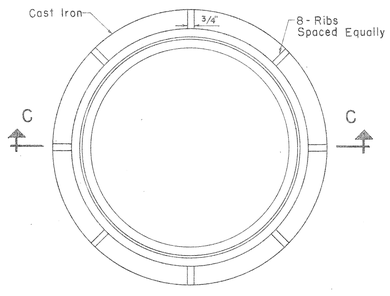

PLAN OF MANHOLE FRAME
Scale: 1 1/2" = 1'-0"

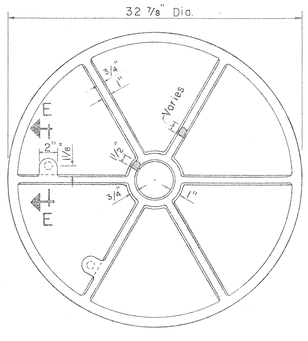

BOTTOM VIEW OF COVER
Scale: 1 1/2" = 1'-0"

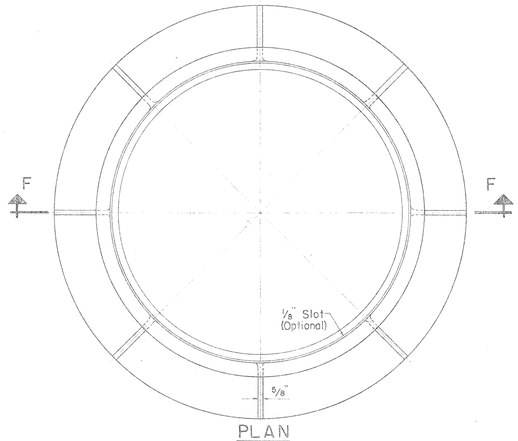

PLAN
SPECIAL MANHOLE FRAME
Scale: 1 1/2" = 1'-0"

Approx. Weight 437 Pounds

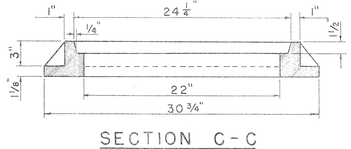

SECTION C-C
Scale: 1 1/2" = 1'-0"

TYPE "SA" SEWER MANHOLE FRAME AND COVER
Scale: 1 1/2" = 1'-0"

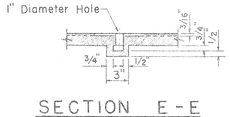

SECTION E-E
Scale: 1 1/2" = 1'-0"

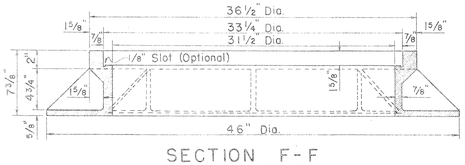

SECTION F-F
Scale: 1 1/2" = 1'-0"

TYPE "SB" SEWER MANHOLE FRAME AND COVER
Scale: 1 1/2" = 1'-0"

APPROVED:

SEWER SYSTEM DIRECTOR, DIVISION OF SEWERS — DATE 8-15-68

STATE OF HAWAII
DEPARTMENT OF TRANSPORTATION
HIGHWAYS DIVISION
DIVISION OF SEWERS
CITY & COUNTY OF HONOLULU

STANDARD DETAILS

SEWERS - MANHOLE RUNGS, CHIMNEY CASTINGS AND FRAME AND COVER DETAILS

Scales: As Noted — Date: 8/16/68

SHEET NO. 18 OF 27 SHEETS

ORIGINAL PLAN		DATE
	SURVEY PLOTTED BY	
	TRACED BY	11-9-65
	DESIGNED BY	11-9-65
NOTE BOOK	QUANTITIES BY	" " "
No.	CHECKED BY	" " "

66 66

FED. ROAD DIST. NO.	STATE	FED. AID PROJ. NO.	FISCAL YEAR	SHEET NO.	TOTAL SHEETS
HAWAII	HAWAII	I-H1-1(64):12, UNIT 2 I-H1-1(16):11	1969	67	128

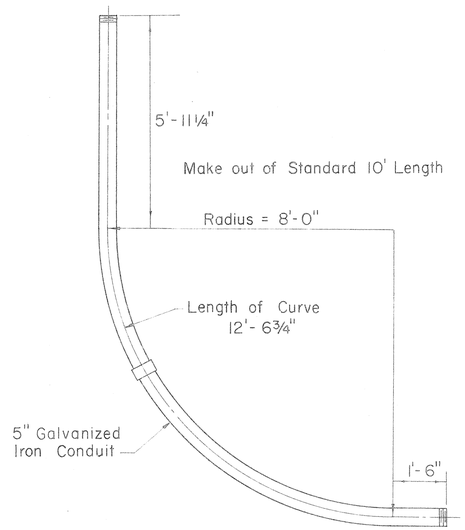

46 KV COMBINATION RISER AND BEND

(8'-0" RADIUS)

Not to Scale

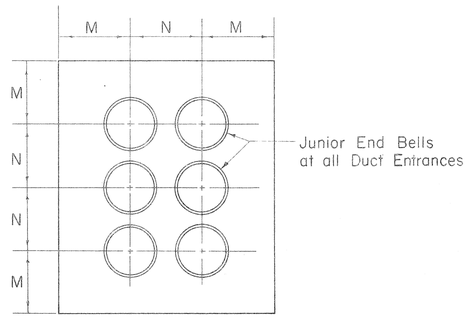

TYPICAL DUCT DETAIL AT MANHOLE WALL

Not to Scale

SIZE	M	N
3"	5"	6"
4"	5½"	7"
4½"	5½"	7½"
5"	6"	8"

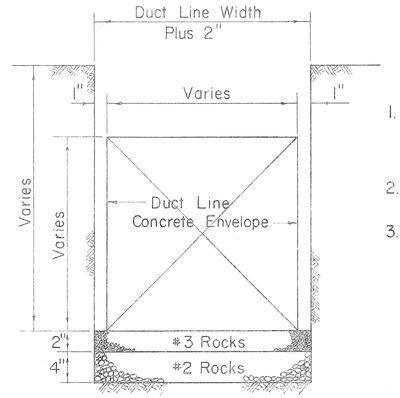

TYPICAL EXCAVATION DETAIL

Not to Scale

NOTES

1. Size of Concrete Envelope and Depth of Excavation to be determined by Project concerned.
2. Widen Trench Excavation when Forms are used.
3. Rock Foundation required only when Water is encountered.

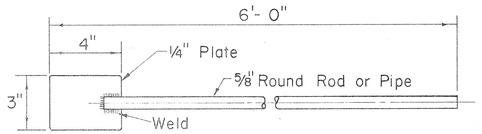

CONCRETE DUCT ENVELOPE TAMPING ROD

Scale: 3" = 1'-0"

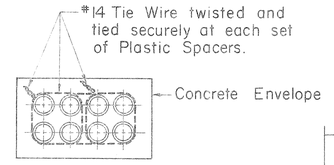

TIE WIRE DETAIL

FOR DUCT LINE MORE THAN 4 DUCTS WIDE

Not to Scale

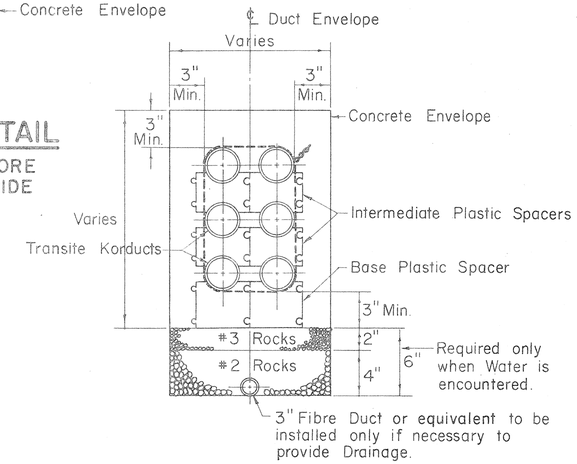

TYPICAL DUCT PLASTIC SPACERS & DRAINAGE SECTION

(6 WAY DUCT SHOWN - 3 HIGH - 2 WIDE)

Not to Scale

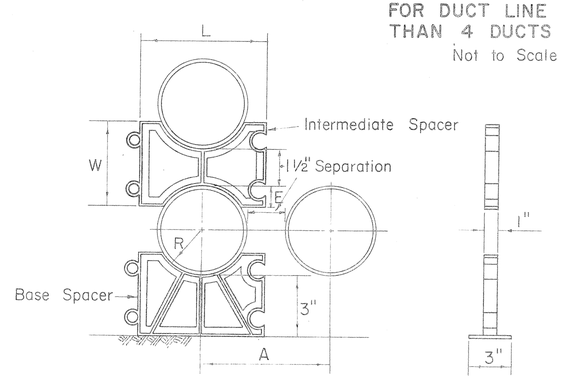

TYPICAL PLASTIC SPACERS

Not to Scale

SIZE	R	E	W	A	L
3"	1 27/32"	7/8"	3 1/4"	5 1/8"	5"
4"	2 13/32"	1 1/8"	3 3/4"	6 1/4"	6 1/8"
4½"	2 23/32"	1 1/4"	4"	6 7/8"	6 3/4"
5"	3 1/16"	1 3/8"	4 1/4"	7 5/8"	7 1/2"

For 1½" Separation

PLAN

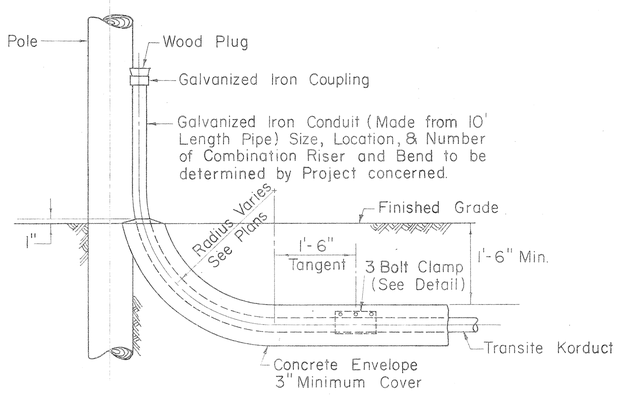

ELEVATION

TYPICAL DETAIL COMBINATION RISER AND BEND

Scale: ¾" = 1'-0"

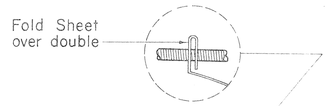

DETAIL

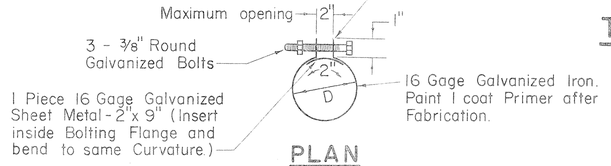

PLAN

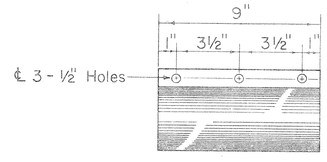

ELEVATION

3 BOLT CLAMP DETAIL

Scale: 3" = 1'-0"

APPROVED:

W B Henderson 8-20-69

HAWAIIAN ELECTRIC CO., INC. DATE

HECo., Inc. Drawing Number

18585

SHEET No. 1 OF 2 SHEETS

STATE OF HAWAII
DEPARTMENT OF TRANSPORTATION
HIGHWAYS DIVISION

STANDARD DETAILS

CONSTRUCTION STANDARDS
TRANSITE KORDUCTS
UNDERGROUND DUCT LINES

Scales: As Noted Date: 8/16/68

SHEET NO. 19 OF 27 SHEETS

67

LIETZ 1103 ARKWRIGHT TRACING CLOTH 10-66 200P

FED. ROAD DIST. NO.	STATE	FED. AID PROJ. NO.	FISCAL YEAR	SHEET NO.	TOTAL SHEETS
HAWAII	HAWAII	I-HI-1(64):12, UNIT 2 I-HI-1(16):11	1969	68	128

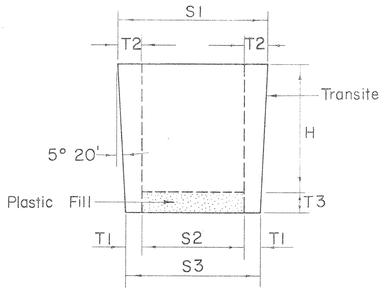

PLUGS FOR TRANSITE KORDUCTS

Not to Scale

SIZE	H	S1	S2	S3	T1	T2	T3
3"	4"	$3\frac{3}{8}$"	2"	$2\frac{5}{8}$"	$\frac{5}{16}$"	$\frac{11}{16}$"	$\frac{3}{4}$"
4"	$4\frac{1}{2}$"	$4\frac{27}{64}$"	$2\frac{3}{4}$"	$3\frac{37}{64}$"	$\frac{13}{32}$"	$\frac{27}{32}$"	$\frac{3}{4}$"
$4\frac{1}{2}$"	$4\frac{1}{2}$"	$4\frac{59}{64}$"	3"	$4\frac{5}{64}$"	$\frac{35}{64}$"	$\frac{31}{32}$"	$\frac{3}{4}$"
5"	$4\frac{1}{2}$"	$5\frac{27}{64}$"	$3\frac{1}{2}$"	$4\frac{37}{64}$"	$\frac{35}{64}$"	$\frac{31}{32}$"	$\frac{3}{4}$"

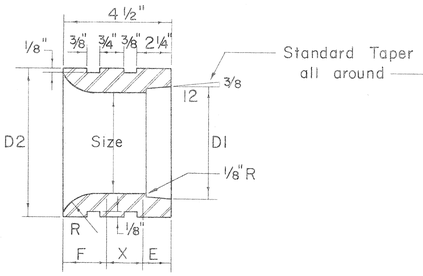

JUNIOR END BELLS

Not to Scale

SIZE	D1	D2	F	X	E	R
3"	$3\frac{25}{64}$"	$4\frac{1}{2}$"	$1\frac{11}{32}$"	$1\frac{29}{32}$"	$1\frac{1}{4}$"	$1\frac{3}{4}$"
4"	$4\frac{25}{64}$"	$5\frac{3}{4}$"	$1\frac{9}{16}$"	$1\frac{9}{16}$"	$1\frac{3}{8}$"	2"
$4\frac{1}{2}$"	$4\frac{57}{64}$"	$6\frac{1}{4}$"	$1\frac{9}{16}$"	$1\frac{9}{16}$"	$1\frac{3}{8}$"	2"
5"	$5\frac{29}{64}$"	7"	$1\frac{9}{16}$"	$1\frac{7}{16}$"	$1\frac{1}{2}$"	2"

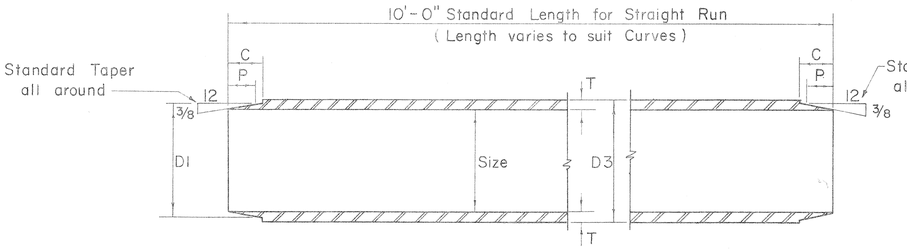

TRANSITE KORDUCTS

Not to Scale

SIZE	D1	D3	C	P	T
3"	$3\frac{25}{64}$"	$3\frac{35}{64}$"	$1\frac{1}{8}$"	$\frac{7}{8}$"	$\frac{17}{64}$"
4"	$4\frac{25}{64}$"	$4\frac{35}{64}$"	$1\frac{1}{4}$"	1"	$\frac{17}{64}$"
$4\frac{1}{2}$"	$4\frac{57}{64}$"	$5\frac{3}{64}$"	$1\frac{1}{4}$"	1"	$\frac{17}{64}$"
5"	$5\frac{29}{64}$"	$5\frac{39}{64}$"	$1\frac{25}{64}$"	$1\frac{1}{8}$"	$\frac{19}{64}$"

Note "X"

Provide one set of Spacers
(a) 10 Ft. straight run for 4 Ducts high or less.
(b) 5 Ft. straight run for 5 Ducts high or more.

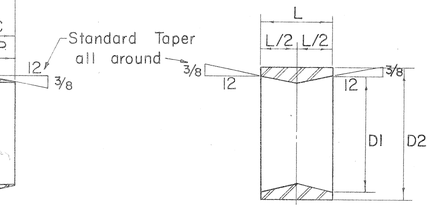

TAPERED COUPLINGS

Not to Scale

SIZE	D1	D2	L
3"	$3\frac{25}{32}$"	$4\frac{11}{64}$"	$2\frac{1}{4}$"
4"	$4\frac{25}{64}$"	$5\frac{3}{16}$"	$2\frac{1}{2}$"
$4\frac{1}{2}$"	$4\frac{57}{64}$"	$5\frac{49}{64}$"	$2\frac{1}{2}$"
5"	$5\frac{29}{64}$"	$6\frac{21}{64}$"	$2\frac{3}{4}$"

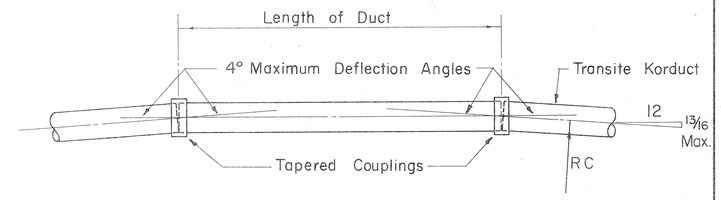

METHOD OF FORMING CURVES

Not to Scale

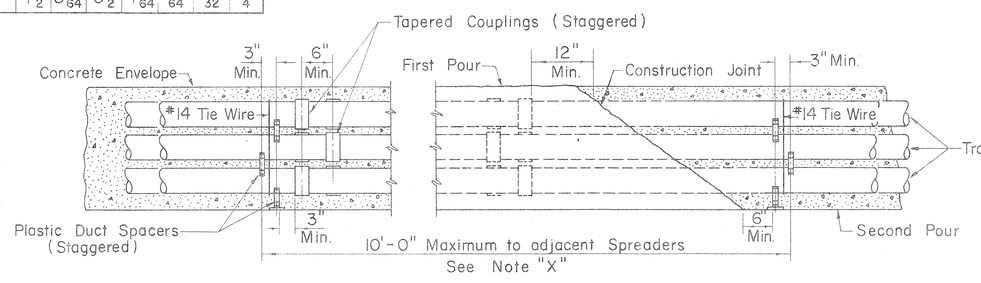

TYPICAL DUCT ENVELOPE ELEVATION

(6 WAY DUCT LINE SHOWN)

Not to Scale

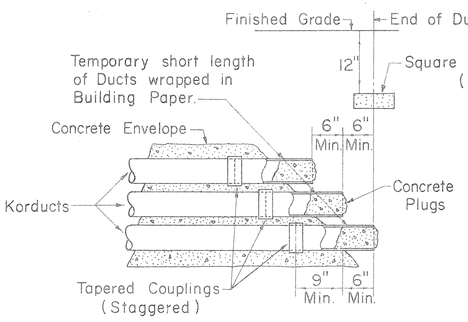

TYPICAL STUB OUT DETAIL

Not to Scale

MINIMUM RADIUS TO FORM CURVES										
LENGTH OF DUCT	1'-0"	1'-6"	2'-0"	2'-6"	3'-0"	3'-6"	4'-0"	4'-6"	5'-0"	5'-6"
MIN. RAD. RC	14'-4"	21'-6"	28'-8"	35'-10"	42'-11"	50'-1"	57'-3"	64'-5"	71'-7"	78'-9"
LENGTH OF DUCT	6'-0"	6'-6"	7'-0"	7'-6"	8'-0"	8'-6"	9'-0"	9'-6"	10'-0"	
MIN. RAD. RC	85'-11"	93'-1"	100'-3"	107'-5"	114'-7"	121'-8"	128'-10"	136'-0"	143'-2"	

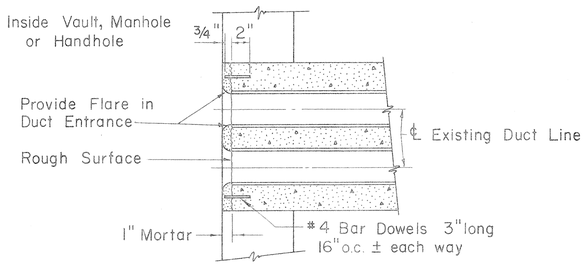

DUCT LINE ENTRANCE AT EXISTING DUCT LINE

Scale: 1 1/2" = 1'-0"

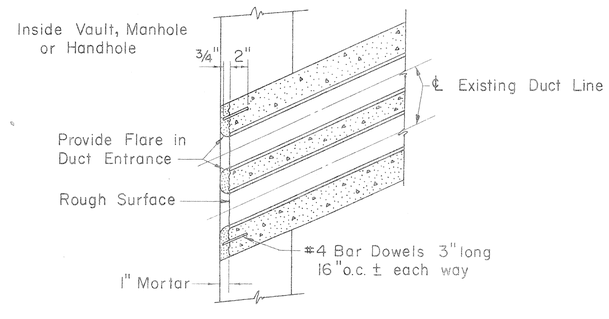

DUCT LINE DIAGONAL ENTRANCE

Scale: 1 1/2" = 1'-0".

APPROVED:

A D Henderson 8-20-68
HAWAIIAN ELECTRIC CO., INC. DATE

HECo., Inc. Drawing Number
18585
SHEET No. 2 OF 2 SHEETS

STATE OF HAWAII
DEPARTMENT OF TRANSPORTATION
HIGHWAYS DIVISION

STANDARD DETAILS

CONSTRUCTION STANDARDS
TRANSITE KORDUCTS
UNDERGROUND DUCT LINES

Scales: As Noted Date: 8/12/68

SHEET NO. 20 OF 27 SHEETS

GS

LIETZ 1103 ARKWRIGHT TRACING CLOTH 10-60 200P

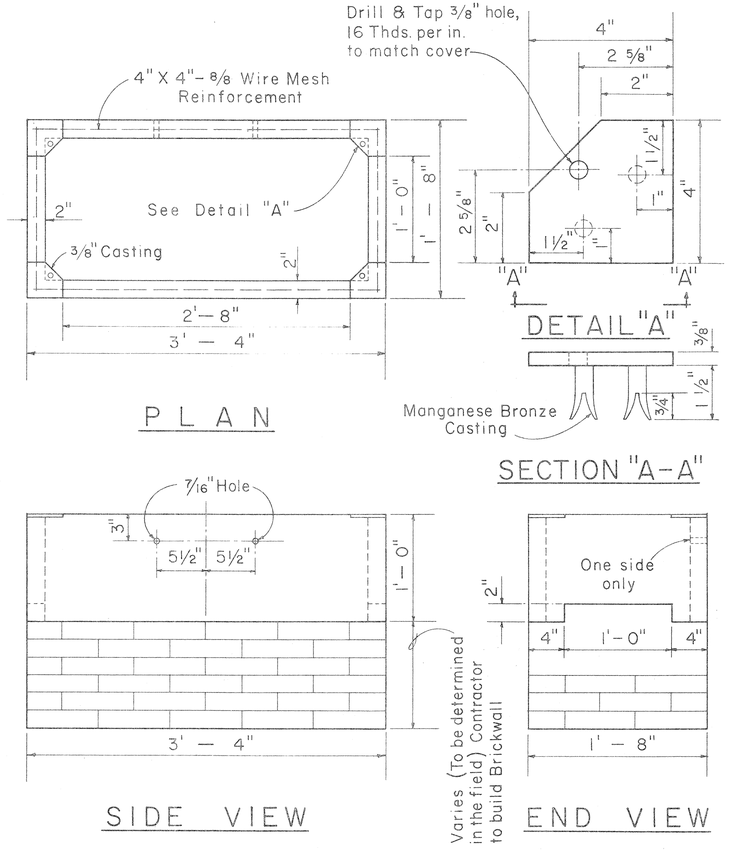

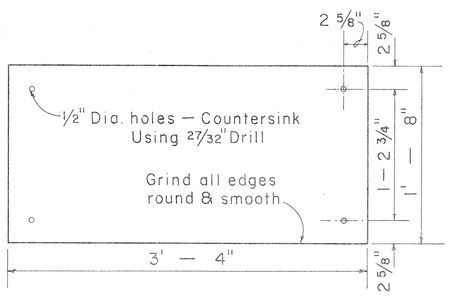

NOTES:
Use 3/8" Plate for driveways.
Concrete Box 225 Lbs.
1/4" Checker Plate 62 Lbs.
Secure cover with 3/8" x 1" flat head brass machine screws.

1/4" CHECKER PLATE COVER

(Hot dip galvanize checkered plate after drilling, countersinking, and grinding edge)

1'-4" X 3'-0" CONCRETE SERVICE BOX

Scale: 1 1/2" = 1'-0"

011250

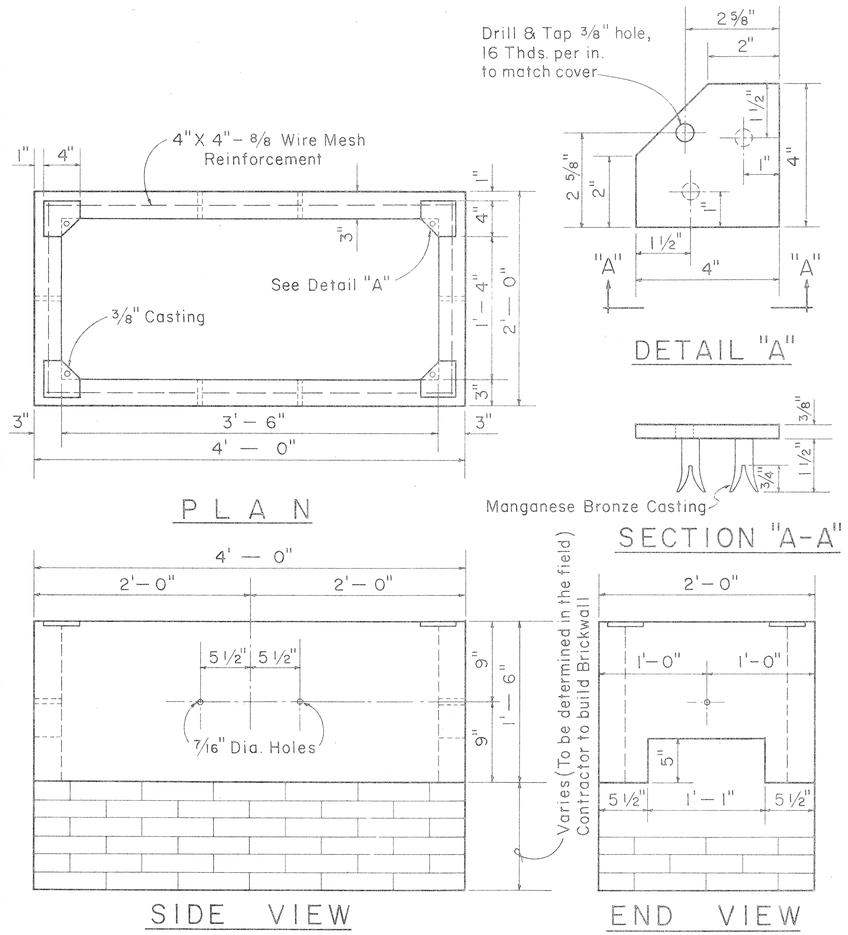

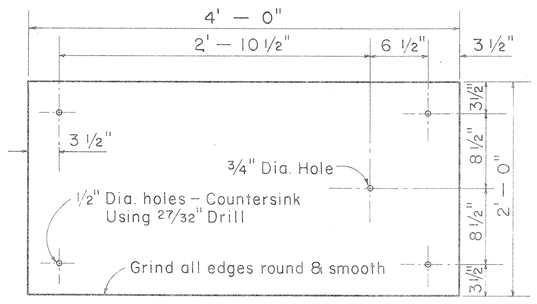

NOTES:
Use 3/8" Plate for driveway.
Concrete Box 575 Lbs.
1/4" Checker Plate 130 Lbs.
Secure cover with 3/8" x 1" flat head brass machine screws.

1/4" CHECKER PLATE COVER

(Hot dip galvanize checkered plate after drilling, countersinking, and grinding edge)

1'-6" X 3'-6" CONCRETE SERVICE BOX

Scale: 1 1/2" = 1'-0"

011255

FED. ROAD DIST. NO.	STATE	FED. AID PROJ. NO.	FISCAL YEAR	SHEET NO.	TOTAL SHEETS
HAWAII	HAWAII	I-HI-I(64):12 UNIT 2 I-HI-I(16):1	1969	69	128

CREOSOTED DOUGLAS FIR & YELLOW PINE POLE DATA

LENGTH IN FEET	CLASS	APPROX. MINIMUM DIMENSIONS (INCHES) AT TOP DIA.	AT TOP CIR.	6' FROM BUTT DIA.	6' FROM BUTT CIR.	AVERAGE WEIGHT (LBS.) DOUGLAS FIR	POLE SETTING DEPTH (FT.) IN SOIL	IN ROCK	BREAKING LOAD 2'-0" BELOW TOP OF POLE (LBS.)
25	5	6.04	19	8.26	26	525	4.5	3	1900
30	3	7.32	23	10.32	32.5	810	5	3.5	3000
	5	6.04	19	8.90	28	600	5	3.5	1900
35	2	7.96	25	12.23	37.5	1260	5	3.5	3700
	5	6.04	19	9.55	30	770	5	3.5	1900
40	3	7.32	23	11.77	37	1320	5.5	3.5	3000
45	2	7.96	25	13.20	41.5	1845	6	4.	3700
	3	7.32	23	12.25	38.5	1575	6	4	3000
50	2	7.96	25	13.70	43.	2150	6.5	4	3700
	3	7.32	23	12.70	40	1850	6.5	4	3000
55	1	8.59	27	15.11	47.5	2860	7	4.5	4500
	2	7.96	25	14.15	44.5	2475	7	4.5	3700
	3	7.32	23	13.20	41.5	2145	7	4.5	3000
60	1	8.59	27	15.75	49.5	3360	7	4.5	4500
	2	7.96	25	14.62	46	2820	7	4.5	3700
65	1	8.59	27	16.20	51	3835	7.5	5	4500
	2	7.96	25	15.11	47.5	3250	7.5	5	3700
70	1	8.59	27	16.70	52.5	4340	7.5	5	4500
	2	7.96	25	15.60	49	3640	7.5	5	3700
75	1	8.59	27	17.20	54	4800	8	5.5	4500
	2	7.96	25	16.05	50.5	4050	8	5.5	3700
80	1	8.59	27	17.50	55	5240	8	6	4500
	2	7.96	25	16.40	51.5	4400	8	6	3700
85	1	8.59	27	18.00	56.5	5780	8.5	6.5	4500
	2	7.96	25	16.88	53	4930	8.5	6.5	3700
90	1	8.59	27	18.30	57.5	6300	8.5	6.5	4500
	2	7.96	25	17.20	54	5400	8.5	6.5	3700

NOTE:
The ultimate fiber stress for creosoted Southern Yellow Pine & Douglas Fir is 7,400 Lbs. per square inch.

Weights are for untreated poles. Add 5% as estimate of added weight of creosote treatment.

REFERENCES:
American Standards Association 05.4-1941, 05.6-1945.
Standard Handbook for Electrical Engineers, Eighth Edition
H. E. Co. Specification for Poles.

WOOD POLE DATA

APPROVED:

A D Henderson — 8-20-68
HAWAIIAN ELECTRIC Co., Inc. — DATE

F F Judd — 8-20-68
HAWAIIAN TELEPHONE Co. — DATE

STATE OF HAWAII
DEPARTMENT OF TRANSPORTATION
HIGHWAYS DIVISION

STANDARD DETAILS
H. E. Co. AND H. T. Co.
SERVICE BOX DETAILS
AND WOOD POLE DATA

Scales: As Noted — Date: 8/16/68

SHEET NO. 21 OF 27 SHEETS.

(69)

ORIGINAL PLAN	SURVEY PLOTTED BY	DRAWN BY	TRACED BY	DESIGNED BY	QUANTITIES BY	CHECKED BY	DATE
NOTE BOOK							
No.							

LIETZ 1103 ARKWRIGHT TRACING CLOTH 10-60 200P

FED. ROAD DIST. NO.	STATE	FED. AID PROJ. NO.	FISCAL YEAR	SHEET NO.	TOTAL SHEETS
HAWAII	HAWAII	I-HI-1(64):12, UNIT 2 I-HI-1(16):11	1969	70	128

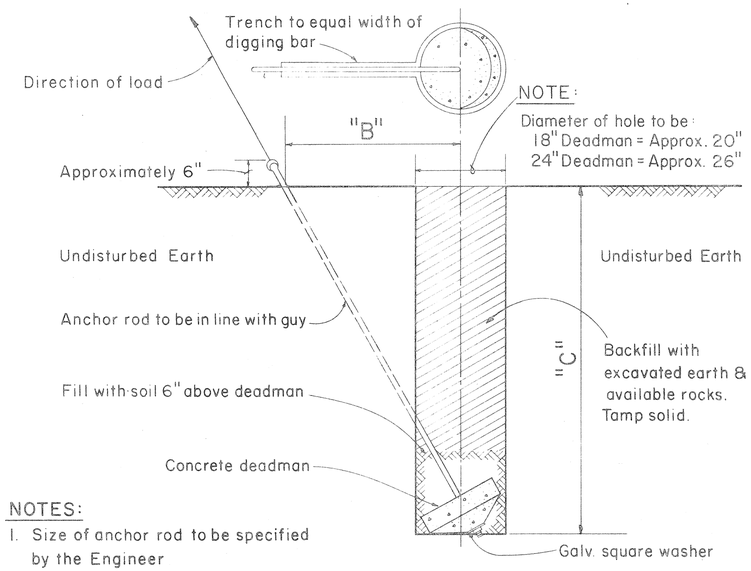

NOTES:
1. Size of anchor rod to be specified by the Engineer
2. Use Anchoring Data.

GUY ANCHOR DEADMAN

Scale: 3/4" = 1' – 0"

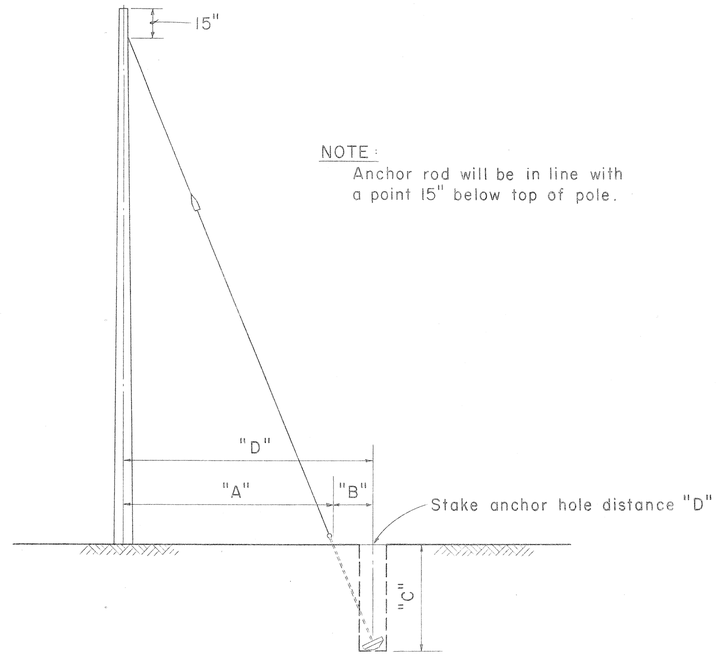

Not to Scale

FOR 25', & 30' POLES WITH 8'-0" ANCHOR RODS				
"A"	"B"	"C"		"D" = ("A" + "B")
LEAD-ANCHOR ROD TO ℄ OF POLE	ANCHOR ROD TO ℄ OF HOLE	VERTICAL DEPTH 18" D.M.	VERTICAL DEPTH 24" D.M.	TOTAL DISTANCE POLE TO HOLE
5'-0"	1'-8"	7'-1"	7'-4"	6'-8"
10'-0"	3'-0"	6'-7"	7'-0"	13'-0"
15'-0"	4'-0"	6'-1"	6'-6"	19'-0"
20'-0"	4'-8"	5'-6"	5'-10"	24'-8"
25'-0"	5'-2"	4'-11"	5'-4"	30'-2"
FOR 35' THRU 70' POLES WITH 8'-0" ANCHOR RODS				
5'-0"	1'-0"	7'-3"	7'-4"	6'-0"
10'-0"	1'-11"	7'-1"	7'-3"	11'-11"
15'-0"	2'-8"	6'-9"	7'-1"	17'-8"
20'-0"	3'-3"	6'-6"	6'-10"	23'-3"
25'-0	3'-10"	6'-2"	6'-7"	28'-10"
FOR 40' THRU 70' POLES WITH 1 1/4" x 10'-0" ANCHOR RODS				
5'-0"	1'-7"		9'-4"	6'-7"
10'-0"	3'-0"		9'-0"	13'-0"
15'-0"	4'-2"		8'-6"	19'-2"
20'-0"	5'-3"		7'-11"	25'-3"
25'-0"	6'-2"		7'-3"	31'-2"

D. M. = Deadman

TABLE 2 ANCHOR ROD - ANCHOR SLUG - SQUARE WASHER COMBINATION

H.E. CODE NO.	ANCHOR ROD	WORKING TENSION 1/2 ULT (LBS.)	H.E. CODE NO.	CONC. ANC. (IN.)	H.E. CODE NO.	WASHER SIZE	QTY.
617	5/8" x 8'-0" Steel	8,000	518	18	2320	4" x 4" x 3/16"	2
615	5/8" x 8'-0" Cu Cov Stl	9,250	518	18	**	3" x 3" x 1/8"	2
618	3/4" x 8'-0" Steel	11,500	518	18	2330	6" x 6" x 3/8"	1
619	1" x 8'-0" Steel	18,000	524	24	2331	6" x 6" x 1/2"	1
616	1" x 8'-0" Cu Cov Stl	22,500	524	24	**	4" x 4" x 3/16"	2
613	1 1/4" x 10'-0" Steel	29,000	524	24	2330	6" x 6" x 3/8"	2

** Use bronze square washers included in anchor rod assembly on copper covered steel (Cu Cov Stl) anchor rods.

ANCHORING DATA

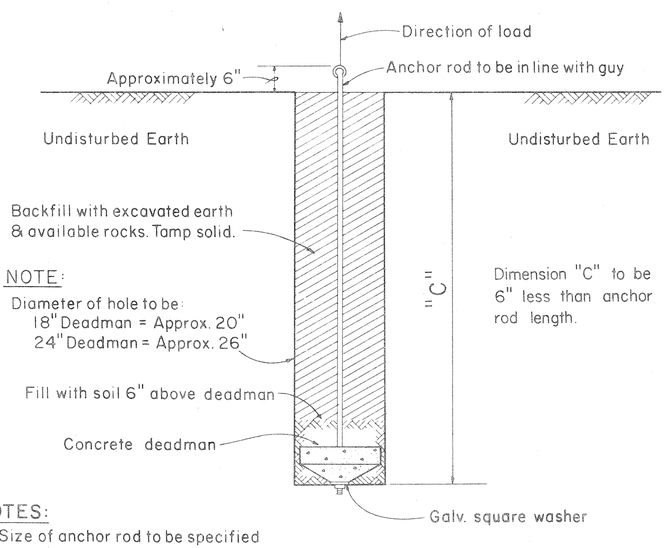

NOTES:
1. Size of anchor rod to be specified by the Engineer.
2. Use Anchoring Data.

SIDE – WALK ANCHOR

Scale: 3/4" = 1' – 0"

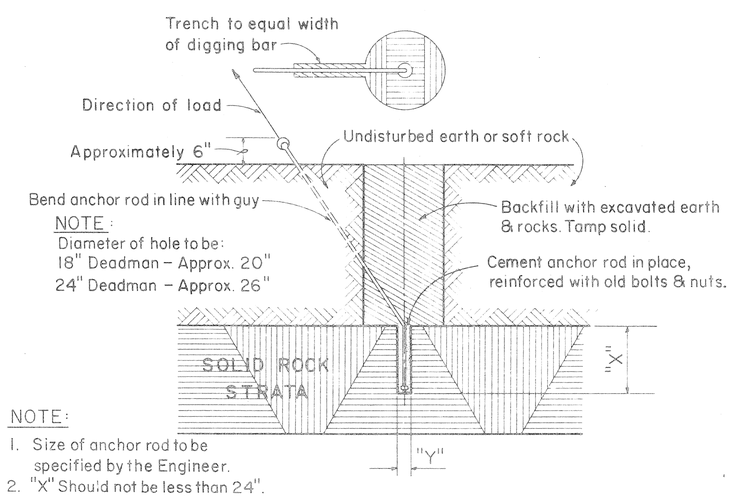

NOTE:
1. Size of anchor rod to be specified by the Engineer.
2. "X" Should not be less than 24". If "X" is less than 24" complete hole & install anchor.
3. "Y" 5/8" Anchor rod drill 2" hole
   3/4" Anchor rod drill 2" hole
   1" Anchor rod drill 2 1/2" hole
   1 1/4" Anchor rod drill 3" hole
4. Use Anchoring Data.

ROCK ANCHOR

Not to Scale

APPROVED:

A D Henderson 8-20-68
HAWAIIAN ELECTRIC Co., Inc. DATE

F A Judd 8-20-68
HAWAIIAN TELEPHONE Co. DATE

STATE OF HAWAII
DEPARTMENT OF TRANSPORTATION
HIGHWAYS DIVISION

STANDARD DETAILS
H.E. Co. AND H.T. Co.
ANCHOR DETAILS AND ANCHORING DATA

Scales: As Noted Date: 8/16/68

SHEET No. 22 OF 27 SHEETS

70

FED. ROAD DIST. NO.	STATE	FED. AID PROJ. NO.	FISCAL YEAR	SHEET NO.	TOTAL SHEETS
HAWAII	HAW.	I-HI-1(64):12 UNIT 2 I-HI-1(16):11	1969	71	128

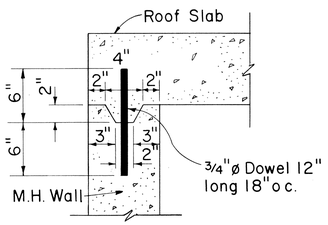

DETAIL "A"
TOP CONSTRUCTION JOINT
Scale: 1 1/2" = 1'-0"
(Optional for cast-in-place construction
Required for precast construction)

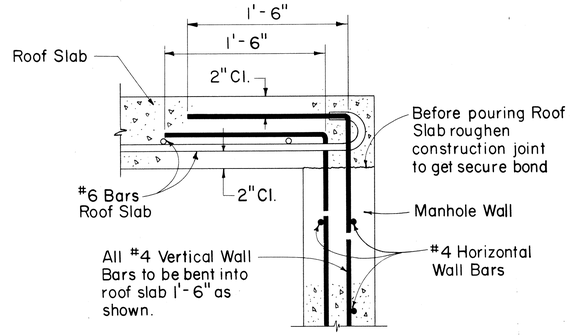

DETAIL "B"
(USED FOR CAST-IN-PLACE CONSTRUCTION)
Scale: 1 1/2" = 1'-0"

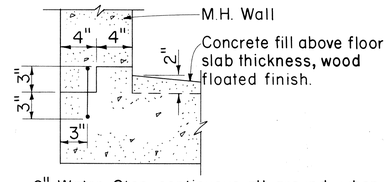

6" Water Stop continuous all around when Manhole is located below Water Table.

DETAIL "C"
BOTTOM CONSTRUCTION JOINT
Scale: 1 1/2" = 1'-0"

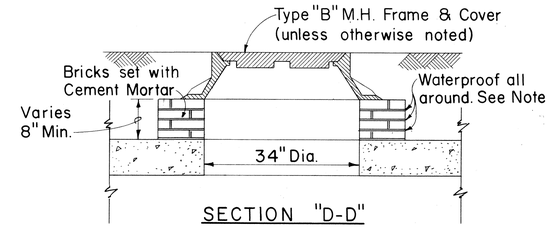

SECTION "D-D"
M.H. COVER DETAIL
Scale: 3/4" = 1'-0"

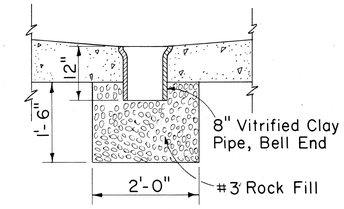

SECTION "E-E"
M.H. SUMP DETAIL
Scale: 3/4" = 1'-0"

Note:
See Section "E_1-E_1" Below

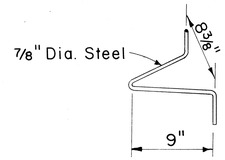

PULLING-IN IRON

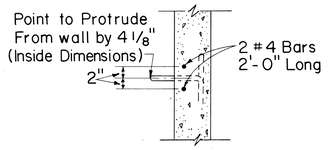

SECTIONAL VIEW OF PULLING-IN IRON
Scale: 3/4" = 1'-0"

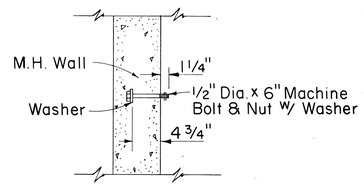

CABLE RACK STUD BOLT DETAIL
Scale: 1" = 1'-0"

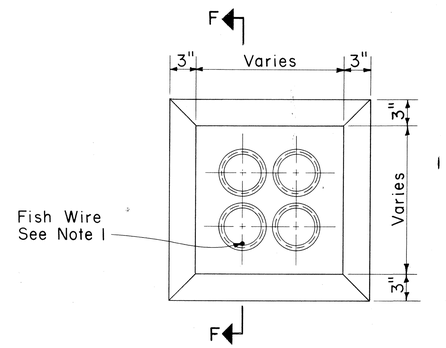

TYPICAL MANHOLE DUCT WINDOW
Scale: 1 1/2" = 1'-0"

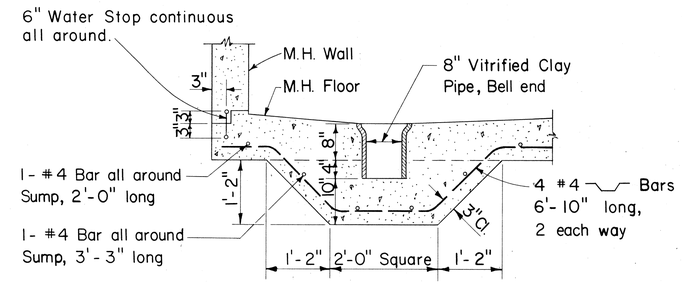

Note: Only for manholes located below water table

SECTION "E_1-E_1"
MANHOLE SUMP DETAIL
Scale: 3/4" = 1'-0"

NOTE

1. The Contractor shall place #12 Fish Wire in designated duct throughout its entire length with protrusions of 2 feet in manholes & handholes at each end and 1 foot in pullboxes.

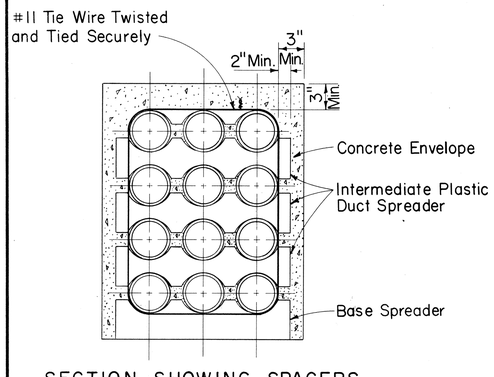

SECTION SHOWING SPACERS

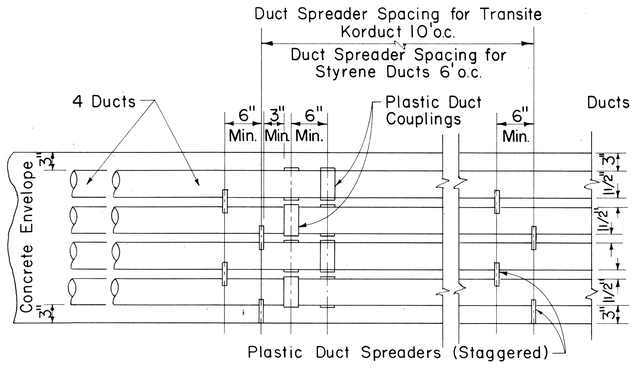

TYPICAL DUCT ENVELOPE ELEVATION
ARRANGEMENT OF COUPLING & PLASTIC SPACERS
Scale: 1" = 1'-0"

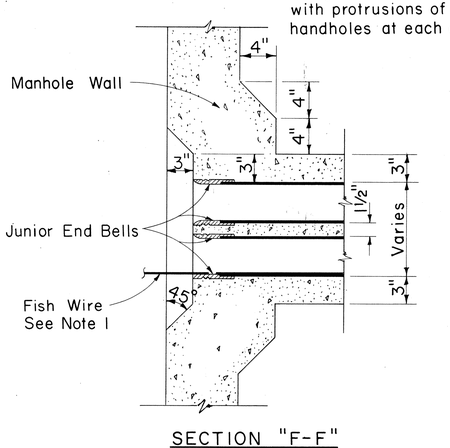

SECTION "F-F"
TYPICAL WINDOW DETAIL & JUNIOR END BELL
Scale: 1 1/2" = 1'-0"

Supplement Sheet to Type "A-1" (Drawing Nos. 34060 & 34061), Type "A-2" (Drwg. Nos. 34062 & 34063) and Type "A-3" (Drwg. Nos. 34064 & 34065) Telephone M.H.

APPROVED:

F. H. Judd 8-20-68
Hawaiian Telephone Co., Ltd. Date

STATE OF HAWAII
DEPARTMENT OF TRANSPORTATION
HIGHWAYS DIVISION

STANDARD DETAILS

TYPE "A" MANHOLE AND MISCELLANEOUS TELEPHONE DETAILS

Scale: As Noted Date: 8/16/68

SHEET No. 23 OF 27 SHEETS

71

ORIGINAL PLAN		DATE
	SURVEY PLOTTED BY	
	DRAWN BY	" "
	TRACED BY	" "
NOTE BOOK	DESIGNED BY	" "
	QUANTITIES BY	" "
No.	CHECKED BY	

FED. ROAD DIST. NO.	STATE	FED. AID PROJ. NO.	FISCAL YEAR	SHEET NO.	TOTAL SHEETS
HAWAII	HAW.	I-HI-1(64):12, UNIT 2 I-HI-1(16):11	1969	72	128

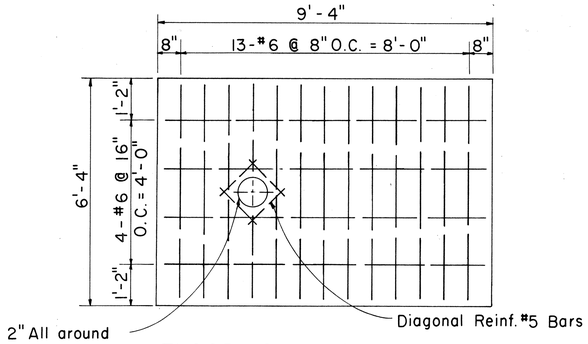

FLOOR SLAB REINF. PLAN

Scale: 1/2" = 1'-0"

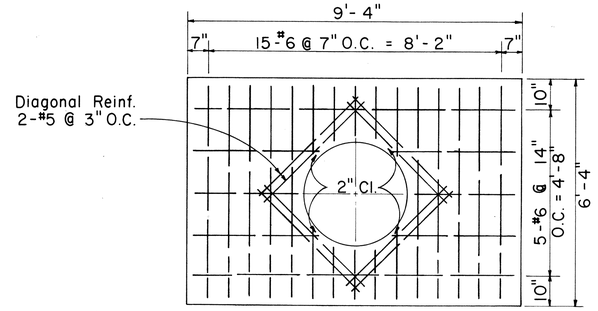

ROOF SLAB REINF. PLAN

Scale: 1/2" = 1'-0"

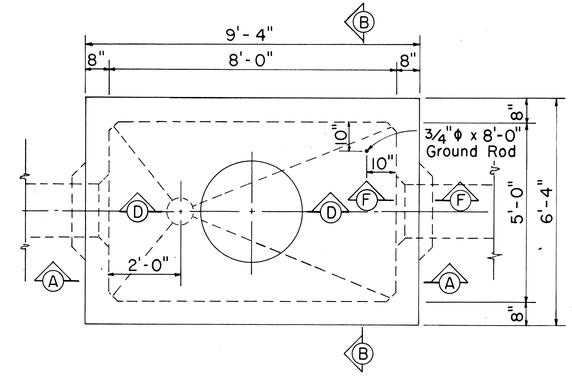

PLAN - M.H. TYPE "A-2" SERIES
FOR ROADWAY & SIDEWALK AREAS

Scale: 1/2" = 1'-0"

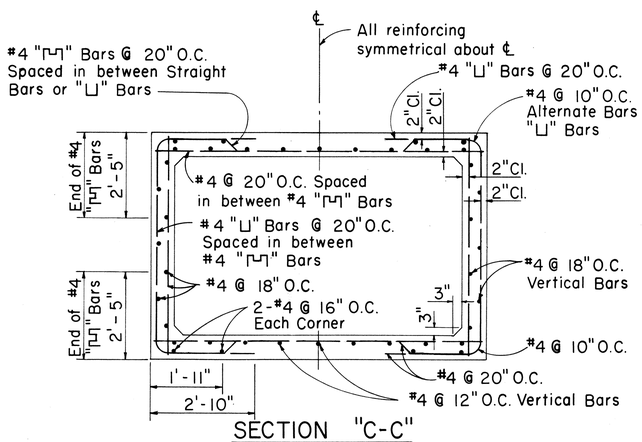

SECTION "C-C"

Scale: 1/2" = 1'-0"

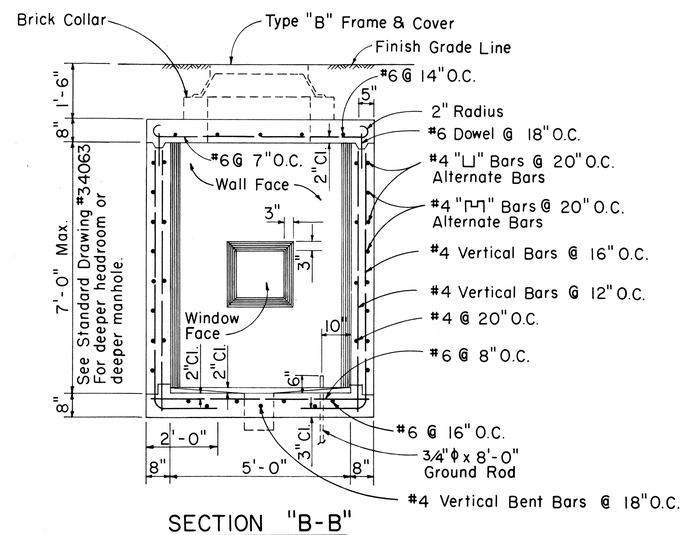

SECTION "B-B"

Scale: 1/2" = 1'-0"

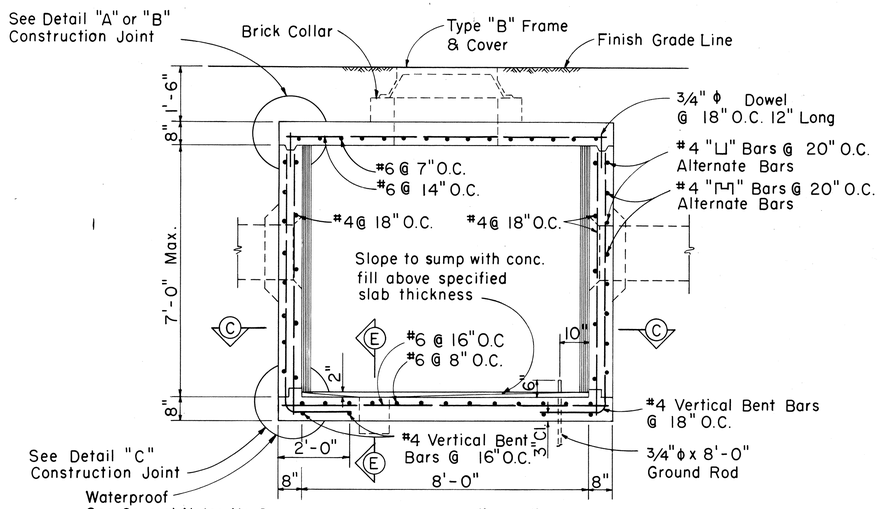

SECTION "A-A"

Scale: 1/2" = 1'-0"

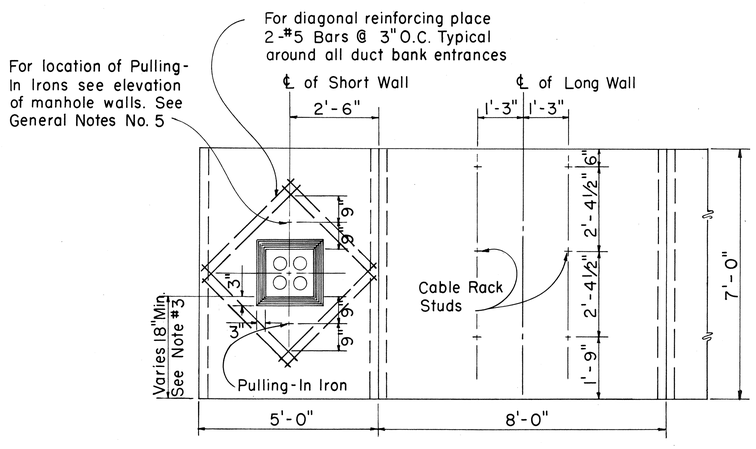

ELEVATION OF M.H. WALLS - TYPE "A-2" SERIES

(OPPOSITE FACES SIMILAR)

Scale: 1/2" = 1'-0"

GENERAL NOTES:

1. Design Data:
   fs = 20,000 psi; f'c = 3,000 psi; fc = 1,350 psi; n = 10
   w = Equivalent Fluid Pressure: 30#/ft²
2. All Construction Joints shall be waterproofed with two applications of Thoro Seal or equal.
3. For Duct Window location see Plan Profile Sheets for Elevations.
4. Duct Window to suit - See Plan & Profile & Standard Detail Sheets for Location & Details.
5. For Details "A", "B", "C," Sections "D-D", "E-E", "F-F" and other miscellaneous Manhole Construction Details see Supplement Sheet to Type "A-1," "A-2" and "A-3" Telephone Manholes.

TYPE "A-2"-6.0'
6.5'
7.0'

Manhole Classification
Width & Length Designation "2" = 5.0' x 8.0'
Manhole Headroom

APPROVED:

Hawaiian Telephone Co., Ltd. — 8-20-68 Date

H.T. Co., Ltd. — Drawing No. 34062

STATE OF HAWAII
DEPARTMENT OF TRANSPORTATION
HIGHWAYS DIVISION

TYPE "A-2" MANHOLES
FOR 6.0' TO 7.0'
HEADROOM

Scale: As Noted — Date: 8/16/68

SHEET No. 24 OF 27 SHEETS

ORIGINAL PLAN	SURVEY PLOTTED BY	DATE
	DRAWN BY	"
	TRACED BY	"
	DESIGNED BY	"
NOTE BOOK	QUANTITIES BY	"
No.	CHECKED BY	"

72

FED. ROAD DIST. NO.	STATE	FED. AID PROJ. NO.	FISCAL YEAR	SHEET NO.	TOTAL SHEETS
HAWAII	HAW.	I-HI-1(64):12 UNIT 2	1969	73	128
		I-HI-1(16):11			

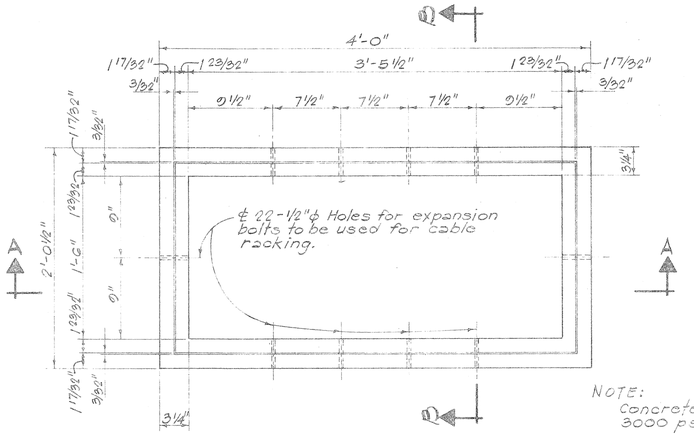

NOTE:
Concrete compressive strength 3000 psi in 28 days.

PLAN

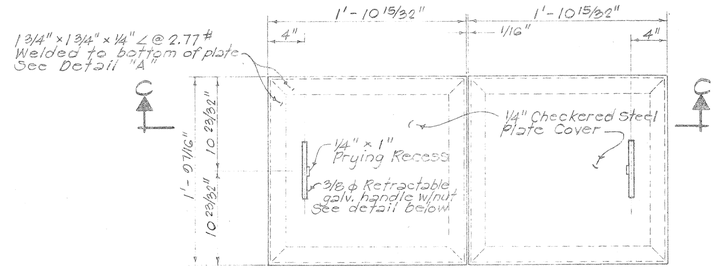

PLAN
Scale: 1/2" = 1'-0"

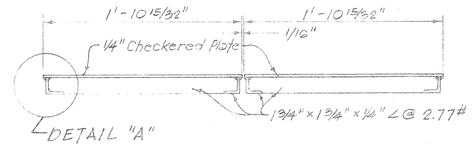

SECTION "C-C"
Scale: 1/2" = 1'-0"

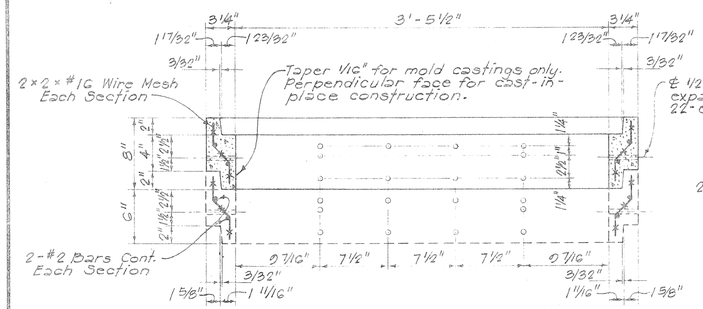

SECTION "A-A"

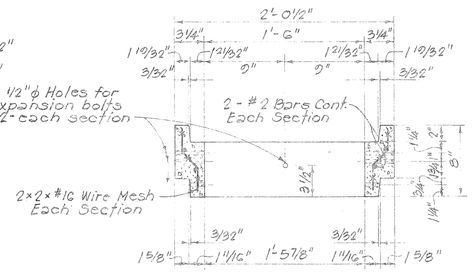

SECTION "B-B"

PULLBOX #435 T-B
Scale: 1 1/2" = 1'-0"

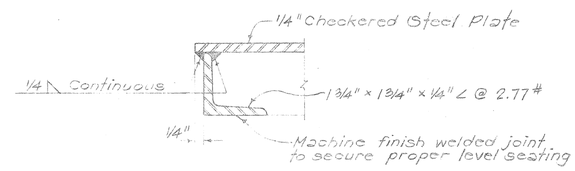

DETAIL "A"
Scale: 6" = 1'-0"

NOTE:
After fabrication of cover, apply 1 coat of silver paint to both sides.

CHECKERED STEEL PLATE COVERS
(FOR LIGHT LOADING AREAS)

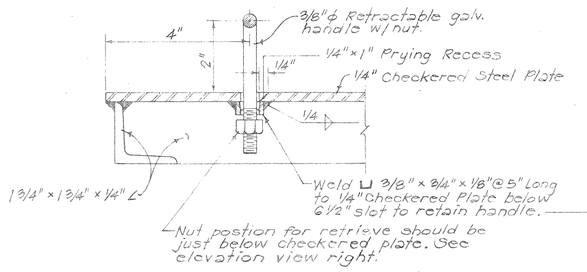

SECTION - RETRIEVE POSITION

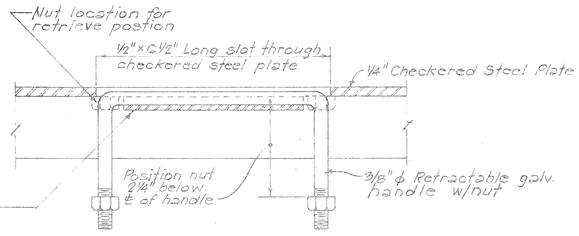

ELEVATION - AT REST POSITION

RETRACTABLE HANDLE
Scale: 6" = 1'-0"

APPROVED: T. H. Quill 6-20-68
Hawaiian Telephone Company Date

STATE OF HAWAII
DEPARTMENT OF TRANSPORTATION
HIGHWAYS DIVISION

LARGE PULLBOX NO. 435 T-B
TELEPHONE

INTERSTATE ROUTE H-1
PROJ. NO. I-HI-1(16):11

Scale: 1" = 50' Date: 8/16/68

SHEET No. 25 OF 27 SHEETS

ORIGINAL PLAN	SURVEY PLOTTED BY	DATE
	DRAWN BY	"
	TRACED BY	"
NOTE BOOK	DESIGNED BY	"
	QUANTITIES BY	"
No.	CHECKED BY	"

PRINTED ON NO. 1000N CLEARPRINT

FED. ROAD DIST. NO.	STATE	FED. AID PROJ. NO.	FISCAL YEAR	SHEET NO.	TOTAL SHEETS
HAWAII	HAW.	I-H1-1(64):16 UNIT 2 I-H1-1(16):11	1969	74	128

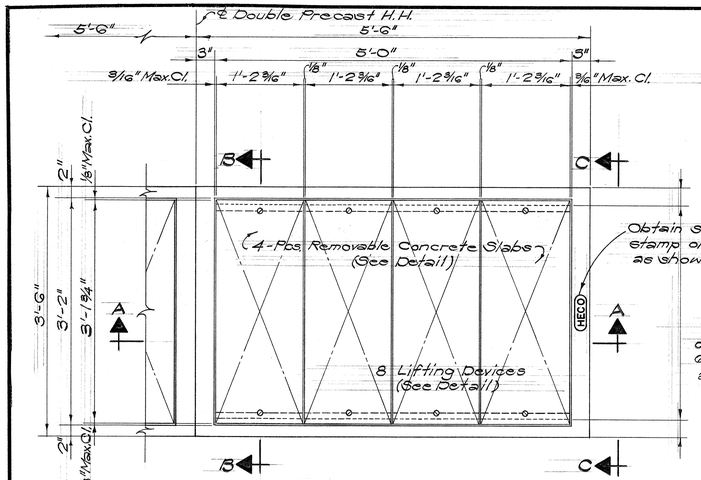

PLAN

Scale: 1" = 1'-0"

** NOTE:
When installing this type handhold on highway projects, provide an additional 6" to the dimensions identified with a double asterisk (**) to maintain the required 2 ft. minimum duct cover.

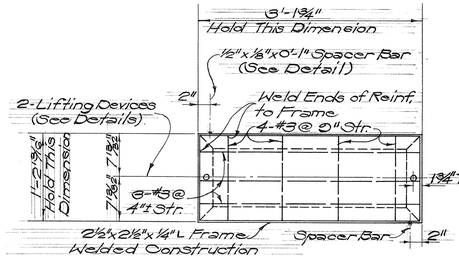

PLAN

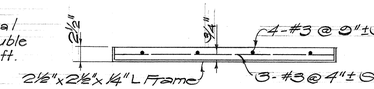

SECTION

REMOVABLE CONCRETE SLAB

Scale: 1" = 1'-0"

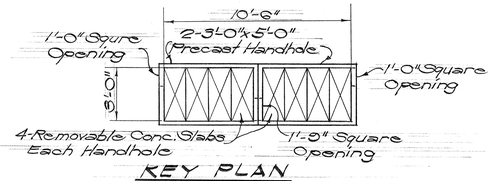

KEY PLAN

Scale: 1/4" = 1'-0"

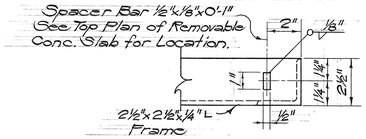

PART ELEV.

SPACER BAR DETAIL

Scale: 3" = 1'-0"

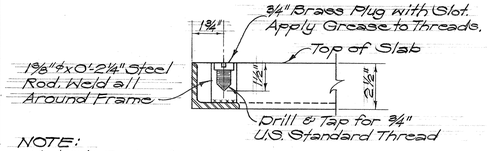

NOTE:
Hot Dip Galvanized L Frame After Fabrication.

LIFTING DEVICE DETAIL

Scale: 3" = 1'-0"

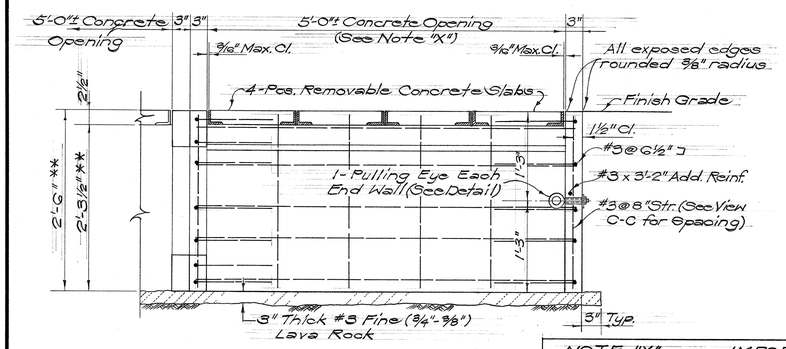

SECTION A-A

Scale: 1" = 1'-0"

NOTE "X" IMPORTANT
Maximum clearances between removable concrete cover slabs and concrete opening at the supports must be kept. Concrete Contractor shall measure cover slab steel frame after fabrication to obtain proper clearances. Any variation in clearances shall be corrected to the satisfaction of the Engineer at Contractor's expense.

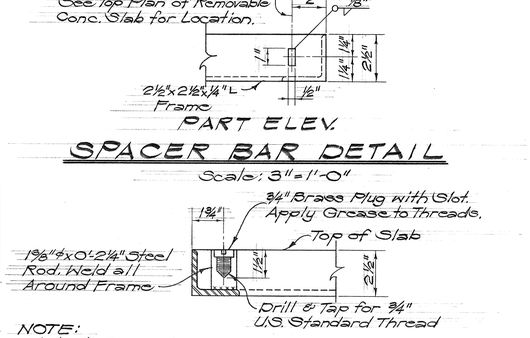

PULLING EYE DETAIL

Scale: 3" = 1'-0"

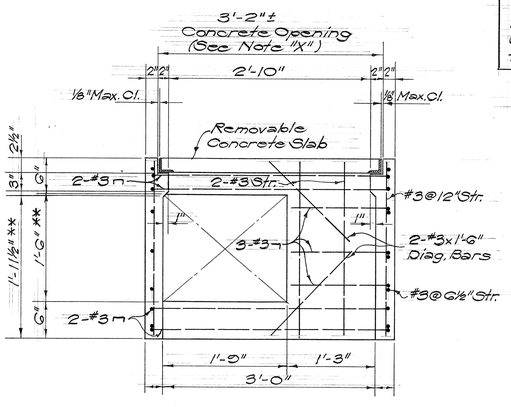

SECTION B-B

Scale: 1" = 1'-0"

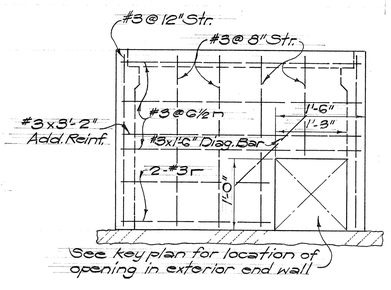

VIEW C-C

Scale: 1" = 1'-0"

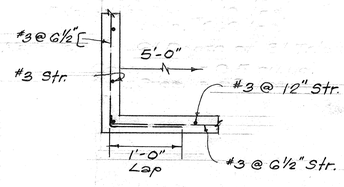

PLAN

CORNER REINFORCEMENT

Scale: 1" = 1'-0"

GENERAL NOTES

1. The general conditions of Specification Sht. 16103 shall govern throughout the entire work.
2. Concrete shall be Class A-1 conforming to the requirements of Section 47 of the special provisions.
3. CONCRETE FINISH:
   Top of Handhole - Wood floated (Sidewalk finish) according to Division of Highways, State of Hawaii or Division of Engineering, City & County of Honolulu specifications which ever the case may be, unless otherwise directed.
   * Floor - Smooth metal trowelled.
   Exposed Wall Surfaces, & Edges - Smooth and free from defects.
   * CONCRETE POURING:
   Notify The Hawaiian Electric Co., Inc. Engineering Department 72 hours before pouring any concrete.
   All concrete shall be poured in the presence of H.E.Co. Engineer or its representative.
4. REINFORCING:
   Round deformed bars, new billet stock intermediate grade A.S.T.M. A15. All hooked bars shall have A.C.I. standard hook unless otherwise shown.
5. FORMS:
   Form handhole to size & shape as shown. Exterior face of handhole walls shall be formed except:
   A) Excavation in solid material such as coral or rock - neat cut - no forms required.
   B) Excavation in solid materials other than coral & rock - lining such as salvaged corrugated iron, canec, etc. shall be used.
6. PULLING EYE:
   For location & number required, see duct entrance plan of project concerned.
7. * DRAINAGE:
   Slope floor down 1/2" to sump.
8. Slope top of handhole to match existing sidewalk grade. In installations outside of sidewalk areas project top of handhole 1" above grade.
   FINISH STEEL WORK:
   Angle frames for removable concrete slabs, lifting device & pulling eye shall be hot dip galvanized after fabrication.
10. EXCAVATION:
    Excavate for handhole to accurate alignment grades & dimensions as shown on drawing. All excavation must be approved by the Engineering Department The Hawaiian Electric Co., Inc., before installing precast handhole. All excess cut shall be backfilled with concrete or crushed lava rock.
11. BACKFILL:
    Remove all debris before backfilling. Backfill in accordance with latest specifications of and subject to approval of Division of Highways, State of Hawaii or Division of Engineering, City & County of Honolulu whichever the case may be unless otherwise directed.
12. For duct line construction standards, see H.E.Co. Dwg. U-18585, Revision #2 and specifications sheet U-18585A.
13. DUCTS:
    For size, location & number required see duct entrance plan of project concerned.
14. ALL MATERIALS SHALL BE NEW AND SHALL BE MANUFACTURED IN THE UNITED STATES OF AMERICA.
15. This handhole to be used in areas not subject to vehicular traffic.

* Applicable to Handhole #18844 only. (For details of Handhole #18844 (See Sht. 75))

APPROVED: O.H. Henderson 8-20-69
Hawaiian Electric Company, Inc. Date

STATE OF HAWAII
DEPARTMENT OF TRANSPORTATION
HIGHWAYS DIVISION

DOUBLE PRECAST HANDHOLE
(# C-2378)
ELECTRICAL

INTERSTATE ROUTE H-1
PROJ. NO. I-H1-1(16):11

Scale: As Shown Date: 8/16/68

SHEET No. 26 OF 27 SHEETS

ORIGINAL PLAN	SURVEY PLOTTED BY	DATE
	DRAWN BY	
	TRACED BY	
NOTE BOOK	DESIGNED BY	
No.	QUANTITIES BY	
	CHECKED BY	

PRINTED ON NO. 1000H CLEARPRINT

74

FED. ROAD DIST. NO.	STATE	FED. AID PROJ. NO.	FISCAL YEAR	SHEET NO.	TOTAL SHEETS
HAWAII	HAW.	I-HI-1(64):12, UNIT 2, I-HI-1(16):11	1969	75	128

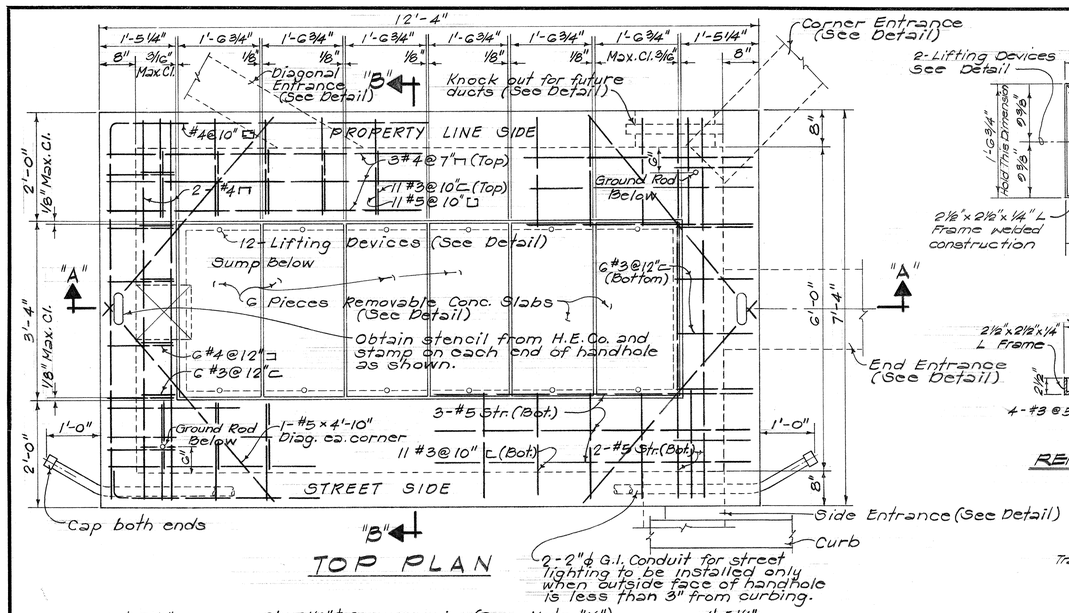

TOP PLAN

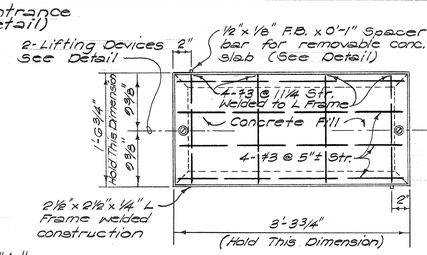

PLAN

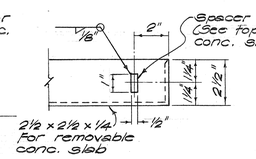

PART ELEV.

SPACER BAR FOR REMOVABLE CONC. SLAB

Scale: 3" = 1'-0"

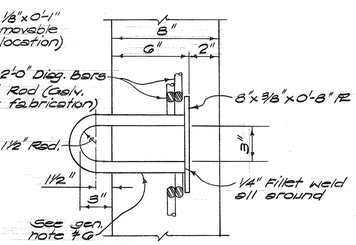

SECTION ELEV.

PULLING IRON

Not to Scale

NOTE: Provide opening for future duct line. Fill opening with bricks and mortar joints as required.

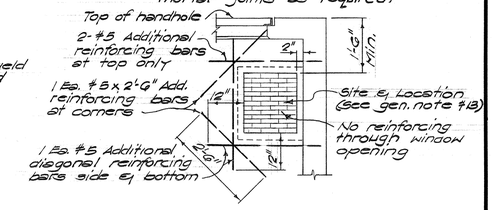

ELEVATION

FOR NOTES SEE HANDHOLE #C-2378, SHT. 74

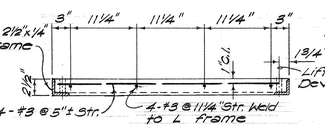

SECTION

REMOVABLE CONC. SLAB

Scale: 1" = 1'-0"

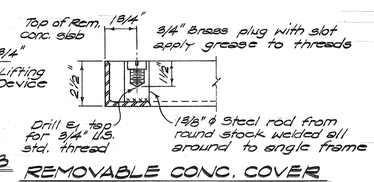

REMOVABLE CONC. COVER SLAB LIFTING DEVICE

Scale: 3" = 1'-0"

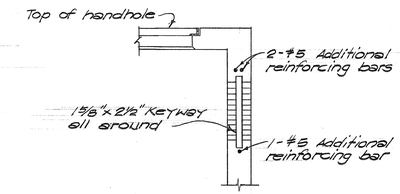

SECTION

KNOCKOUT FOR FUTURE DUCT LINE

Scale: 1/2" = 1'-0"

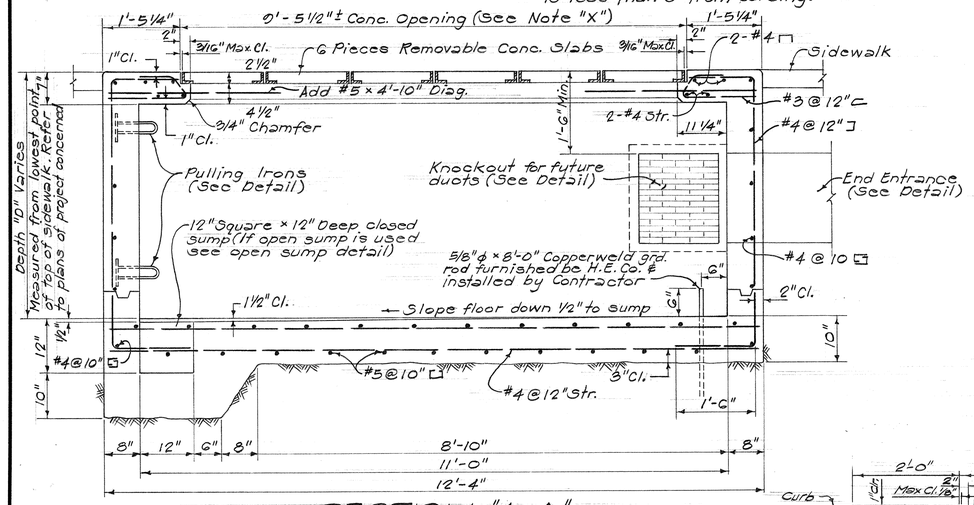

SECTION "A-A"

Scale: 3/4" = 1'-0"

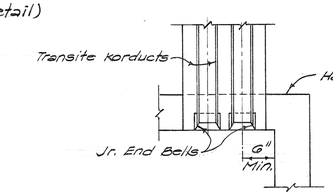

PLAN

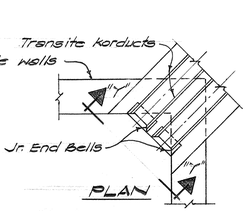

PLAN

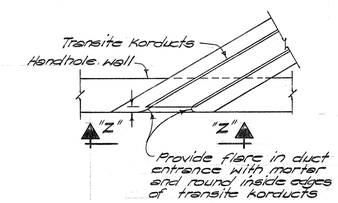

PLAN

NOTE: Exact location of sump to be determined in field.

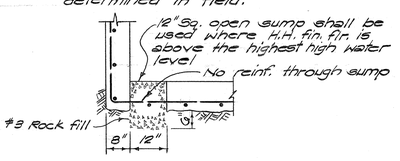

SECTION ELEV.

OPEN SUMP

Scale: 1/2" = 1'-0"

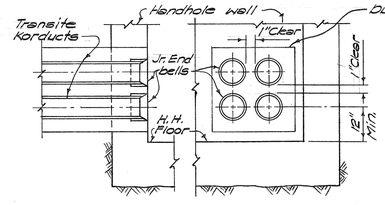

SIDE ELEV. FRONT ELEV.

END & SIDE ENTRANCES

(FOUR WAY DUCT)

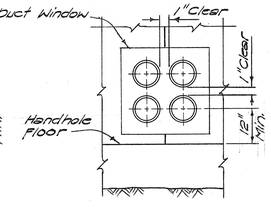

ELEVATION "Y-Y"

CORNER ENTRANCE

(FOUR WAY DUCT)

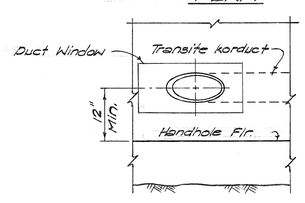

ELEVATION "Z-Z"

DIAGONAL ENTRANCE

(FOUR WAY DUCT)

TYPICAL DUCT LINE ENTRANCE DETAILS

NOT TO SCALE

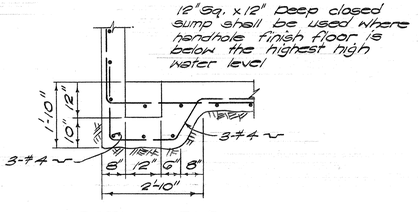

SECTION ELEV.

CLOSED SUMP

Scale: 1/2" = 1'-0"

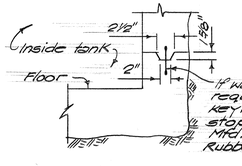

CONSTRUCTION JOINT TYPICAL

Scale: 1" = 1'-0"

NOTE "X" - IMPORTANT:

Maximum clearances between removable concrete cover slabs and concrete opening at the supports must be kept. Concrete contractor shall measure cover slab steel frame after fabrication to obtain proper clearances. Any variation in clearances shall be corrected to the satisfaction of the engineer at contractors expense.

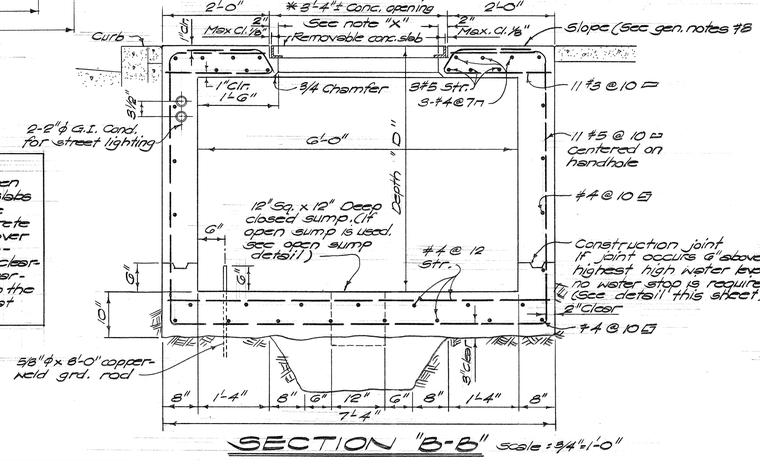

SECTION "B-B" Scale: 3/4" = 1'-0"

NOTE: Generally 2 pulling irons are required and located on opposite wall of each duct window, unless otherwise shown or noted. H.E. Co. engineer shall determined number required.

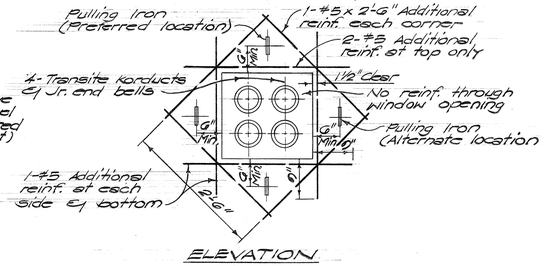

ELEVATION

TYPICAL DETAIL AT DUCT WINDOW

Scale: 3/4" = 1'-0"

STATE OF HAWAII
DEPARTMENT OF TRANSPORTATION
HIGHWAYS DIVISION

TYPE C11 H.H. (#18844)
ELECTRICAL

INTERSTATE ROUTE H-1
PROJ. NO. I-HI-1(16):11

Scale: As shown Date: 8/16/68

SHEET No. 27 OF 27 SHEETS

ORIGINAL PLAN	SURVEY PLOTTED BY	DATE
	TRACED BY	
	DESIGNED BY	
NOTE BOOK	QUANTITIES BY	
No.	CHECKED BY	

APPROVED: A.D. Henderson 8-20-68
Hawaiian Electric Company, Inc. Date

PRINTED ON NO. 1000H CLEARPRINT