FED. ROAD DIST. NO.	STATE	FED. AID PROJ. NO.	FISCAL YEAR	SHEET NO.	TOTAL SHEETS
HAWAII	HAW.	(HI-164)2 Unit 7 (HI-106)(1)	1969	88	158

Revised: June 30, 1969

DRAINAGE SUMMARY

STRUCTURES			PIPE CULVERTS		ESTIMATED QUANTITIES																																				REMARKS
			ITEM	NO.	14.01	15.01	20A.01	46.101	46.201	46.213A1	48.01	58B.034	58.128	58.174	58.122	58.174	58.172	60.018	60.048	62.01	65.01	67.11	68.01	54A.07	119.01A2	54A.10	59B.199														
NUMBER	TYPE	STATION	FROM	TO	Structure Excavation other than at Bridges	Ditch and Channel Excavation	Untreated Base for Pipe Foundation	Class A-1 Concrete other than in Bridges	Class B-1 Concrete other than in Bridges	Class B-1 Concrete for Concrete Lined Ditch	Reinforcing Steel other than in Bridges	24" ACCP, Class III or 24" RCCP, Class III	54" RCCP, Cl. III	42" RCCP, Cl. IV	36" RCCP, Cl. III	48"x27" CGMP Arch (12 Gage)	36" RCCP, Cl. IV	108" Sectional Plate Pipe Culvert (12 Gage)	108" Sectional Plate Pipe Culvert (10 Gage)	Cement Rubble Masonry	Grouted Rubble Paving	Brick Wall for Type "D" or "E" SDMH	Type "A" Cast Iron Frame and Cover	Type "A-1a" Steel Frame and Grates	Shotcrete for Concrete Lined Ditch	Type G121 Steel Frame and Grate	24" CGMP 8 Ga. or 24" RCCP with Concrete Collars, Class III or 24" ACCP with Collars, Class III											
			UNIT	USED	C.Y.	C.Y.	C.Y.	C.Y.	C.Y.	C.Y.	Lb.	L.F.	L.F.	L.F.	L.F.	L.F.	L.F.	L.F.	L.F.	C.Y.	C.Y.	L.F.	Ea.	Ea.	C.Y.	Ea.	L.F.														
	DIVERSION CHANNEL	107+84 Lt. TO 105+61.5 Rt.				~~4028~~ ~~1200~~																																			
	TYPE "E" SDMH	116+50 Rt.	116+50 Rt.	114+07.5 Rt.	402				2		87		240									4	1																		
	TYPE "E" SDMH	117+00 Rt.	117+00 Rt.	116+50 Rt.	284				2		72		136									4	1																		
	TYPE "E" SDMH	120+40 Rt.	120+40 Rt.	117+00 Rt.	305			5.5	3.0		2024			246								4	1																		
	TYPE "E" SDMH	122+05 Rt.	122+05 Rt.	120+40 Rt.	297				5		166						162					4	1																		
	TYPE "E" SDMH	122+70 Rt.	122+70 Rt.	122+05 Rt.	191				6.5		218				78						9.5	4	1				72														
	TYPE G121 C.D.I.	124+00 Rt.	124+00 Rt.	122+70 Rt.	525			5.5			27				128												128														
	TYPE G121 C.D.I.	124+00 Lt.	124+00 Lt.	124+00 Rt.	521			4.5			27				144																										
	TYPE "E" SDMH	126+00 Lt.	126+00 Lt.	124+00 Lt.	476				2		71				196							4	1																		
	TYPE "E" SDMH	126+84 Lt.	126+84 Lt.	126+00 Lt.	218				3		112				114							4	1																		
	SPILLWAY	145+20 Rt.				57.5 ~~55~~				14.68 ~~14~~	232.7 ~~423~~														0 ~~14~~														
	CONCRETE DROP BOX	146+35 Rt.			5.3 ~~5~~				2.41 ~~2.5~~																																
	CUT-OFF DITCH	141+00 TO 146+20 Lt.				220 ~~200~~				56.15 ~~54~~	882.6 ~~1310~~														0 ~~54~~														
	SPILLWAY	145+05 Lt.				85.3 ~~80~~				21.83 ~~25~~	343.8 ~~820~~														0 ~~25~~														
	SECT. PLATE PIPE CULVERT	148+08			278.3 ~~315~~		167.4 ~~111~~	44.92 ~~47~~			6,500.0 ~~5000~~							68.1 ~~70~~	206.0 ~~254~~																				
	CONCRETE DROP BOX	148+20 Lt.			5.3 ~~5~~				2.41 ~~2.5~~																																
	CONCRETE DROP BOX	148+00 Lt.			5.3 ~~5~~				2.41 ~~2.5~~																																
	CUT-OFF DITCH	148+00 TO 163+60 Lt.				676.0 ~~550~~				222.16 ~~150~~	260.12 ~~2506~~														0 ~~150~~														
	SPILLWAY	163+40 Rt.				50.6 ~~50~~		Culv. Conn. Slab	1.62	15.23 ~~15~~	241.3 ~~223~~ 118.3	: Spillway : Culv. Conn. Slab													0 ~~15~~														
	CONCRETE DROP BOX	164+60 Rt.			5.3 ~~5~~				2.41 ~~2.5~~																																
	SPILLWAY	163+50 Lt.				77.1 ~~75~~				18.77 ~~19~~	303.1 ~~340~~														0 ~~19~~														
	CONCRETE DROP BOX	165+00 Lt.			5.4 ~~5~~				2.41 ~~2.5~~																																
	TYPE "1-D" CATCH BASIN	162+50	162+50	163+40	30.5 ~~20~~			2.62 ~~2.7~~			45.7 ~~41~~	85.8 ~~80~~												2.0 ~~2~~															
	TYPE "1-D" CATCH BASIN	163+40	163+40	163+52 Rt.	64.3 ~~60~~			2.74 ~~3~~			45.7 ~~41~~	101.0 ~~100~~												2.0 ~~2~~															
	EARTH DITCHES	164+61				135 = CCO 24																																			

ORIGINAL PLAN	SURVEY PLOTTED BY	DATE
	DRAWN BY	"
	TRACED BY	"
NOTE BOOK	DESIGNED BY	"
No.	QUANTITIES BY	"
	CHECKED BY	"

SHEET No. 1 OF 20 SHEETS

THIS SHEET SUPERSEDES SHEET NO. 88

COSS

FED. ROAD DIST. NO.	STATE	FED. AID PROJ. NO.	FISCAL YEAR	SHEET NO.	TOTAL SHEETS
HAWAII	HAW.	F-HI(18-4) Unit 1 HI-11(16)11	1969	89	158

DRAINAGE SUMMARY

STRUCTURES			PIPE CULVERTS		ESTIMATED QUANTITIES																														REMARKS
NUMBER	TYPE	STATION	ITEM	NO.	14.01	15.01	20A.01	40.101	40.201	46.213A1	48.01	58B.018	58B.050	59.172	59B.178	59B.274	59B.354	59.201	58B.034	60.051	60.060	54A.15	60.180	60.209	60.2-18	65.01	97.11	98.01	98.02	54A.04	54A.07	110.01A3	46.122	48.22	62.01	14.60	27.05	
			FROM	TO	Structure Excavation other than at Bridges	Ditch and Channel Excavation	Untreated Base for Pipe Foundation	Class A-1 Concrete other than in Bridges	Class B-1 Concrete other than in Bridges	Class B-1 Concrete for Concrete Lined Ditch	Reinforcing Steel other than in Bridges	18" ACCP, Class III or 18" RCCP, Class III	36" ACCP, Class III or 36" RCCP, Class III	24" CGMP (12 Ga. or 24" RCCP, Class III or 24" ACCP, Class III	24" CGMP (12 Ga. or 24" RCCP, Class III or 24" ACCP, Class III	30" CGMP (12 Ga. or 30" RCCP, Class III or 30" ACCP, Class III	36" CGMP (12 Ga. or 36" RCCP, Class III or 36" ACCP, Class III	18" Sectional Plate Pipe Culvert (12 Gage)	24" ACCP, Class III or 24" RCCP, Class III	18" Sectional Plate Pipe Culvert (10 Gage)	18" Sectional Plate Pipe Culvert (10 Gage)	Type G1G12 Steel Frame & Grates CCO #22	18" Sectional Plate Pipe Culvert (7 Gage)	18" Sectional Plate Pipe Culvert (3 Gage)	18" Sectional Plate Pipe Culvert (1 Gage)	Grouted Rubble Paving	Brick Wall for Type "D" or "E" SDMH	Type "A" Cast Iron Frame and Cover	Type "B" Cast Iron Frame and Cover	Type "A-2" Steel Frame and Grate	Type "A-12" Steel Frame and Grate	Shotcrete for Concrete Lined Ditch	Class A-1 Concrete in Culvert at 167+13	Reinforcing Steel in Culvert at 167+13	Cement Rubble Masonary	Structure Excavation for Bridges	Course Rock for Pipe Foundation CCO #29	
			UNIT	USED	C.Y.	C.Y.	C.Y.	C.Y.	C.Y.	C.Y.	Lb.	L.F.	L.F.	L.F.	L.F.	L.F.	L.F.	L.F.	L.F.	L.F.	L.F.	Ea.	L.F.	L.F.	L.F.	C.Y.	L.F.	Ea.	Ea.	Ea.	Ea.	C.Y.	L.F.	L.F.	C.Y.	C.Y.	C.Y.	
	TYPE "I-D" CATCH BASIN	164+50	164+50	163+40	36.7 ~~35~~			2.57 ~~2.6~~			45.7 ~~44~~								104.5 ~~110~~												2						
	SECT. PLATE PIPE CULVERT	167+13				354.2 ~~340~~	712.4 ~~721~~														140.0		96	96	408	21.7 ~~21~~							6,000.00 (130)	3,600.00 (17,930)		3524.6 ~~3400~~	472.6	
	SPILLWAY	168+80 Rt.				48.3 ~~49~~				12.32 ~~13~~	105.1 ~~110~~																					0 ~~5~~						
	CONCRETE DROP BOX	167+80 Rt.			5.4 ~~5~~				2.41 ~~2.5~~																													
	SPILLWAY	169+28 Lt.				43.4 ~~42~~				11.07 ~~11~~	175.3 ~~170~~																					0 ~~3~~						
	CONCRETE DROP BOX	169+05 Lt.			5.4 ~~5~~				2.41 ~~2.5~~																													
	CUT-OFF DITCH	169+05 TO 171+40 Lt.				62.3 ~~7~~				15.89 ~~15~~	251.7 ~~207~~																					0 ~~5~~						
	TYPE ~~"I-C"~~ G1G12 CATCH BASIN	174+00 Rt.	174+00 Rt.	175+25	87.0 ~~80~~ CCO 22			3.4 ~~5.0~~ CCO 22			126.0 ~~131~~ CCO 22				144.5 ~~144~~							2.0 CCO 22							Delete CCO 22										
	TYPE "I-D" CATCH BASIN	175+25	175+25	176+00	85.3 ~~75~~			5.19 ~~4.4~~			52.0 ~~47~~				94.5 ~~86~~																2						
	TYPE ~~"I-C"~~ G1G12 CATCH BASIN	176+00 Rt.	176+00 Rt.	176+25	53.6 ~~55~~ 51.0 CCO 22			4.8 ~~5.0~~ CCO 22			126.0 ~~131~~ CCO 22				81.2 ~~86~~							2.0 CCO 22							Delete CCO 22										
	TYPE "I-D" CATCH BASIN	176+25	176+25	179+35 Lt.	166.7 ~~171~~			4.30 ~~2.8~~			45.0 ~~47~~				313.1 ~~318~~																2						
	CHANNEL	179+34.5 Lt.				11				2.7	100																					2.7						
	TYPE "I-D" CATCH BASIN	179+35 Rt.	179+35 Rt.	179+35 Lt.	94			4.4			41				184																2							
	TYPE "I" CDI.	179+34.5 Lt.	179+34.5 Lt.	181+45 Lt.	145			5.4			194					208																						
	TYPE "D" SDMH	181+45 Lt.	181+45 Lt.	181+50 Lt.	27				.9		29					26											6	1										
	EXISTING 24" RCCP	181+62 Lt.	181+62 Lt.	181+76 Lt.	28									28																								
	EXISTING CATCH BASIN	183+00 Lt.	183+00 Lt.	182+71 Lt.	55										74																							
	TYPE "I-A" CATCH BASIN	183+08 Lt.	183+08 Lt.	182+77 Lt.	44			5.7			485			60														1										
	TYPE "I-A" CATCH BASIN	183+00 Rt.	183+00 Rt.	183+38 Rt.	45			5.7			485			60														1										
	SECT. PLATE PIPE CULVERT	183+00.77			2760		326	50			6750								204		180					14			1						21			
	TYPE "A-2" SDMH	185+47 Rt.	185+47 Rt.	185+47 Rt.	22			3			127	24																		1								
	TYPE "C-2" SDMH	185+47 Rt.	185+47 Rt.	185+42 Rt.	30			5.2			178		10																	1								
	TYPE "D" SDMH	186+28 Rt.	186+28 Rt.	185+70 Rt.	67				.9		29		84														6	1										
	TYPE "I-A" CATCH BASIN	186+72 Rt.	186+72 Rt.	186+28 Rt.	51			8.3			485						44											1										
												D			E			L			E			T			E											

ORIGINAL PLAN WAS ADDED TO THE PLAN OF	DATE
	DRAWN BY
	TRACED BY
NOTE BOOK	DESIGNED BY
	QUANTITIES BY
No.	CHECKED BY

SHEET No. 2 OF 20 SHEETS

FED. ROAD DIST. NO.	STATE	FED. AID PROJ. NO.	FISCAL YEAR	SHEET NO.	TOTAL SHEETS
HAWAII	HAW.	I-HI-1(64):12 Unit 1 I-HI-1(16):11	1969	90	158

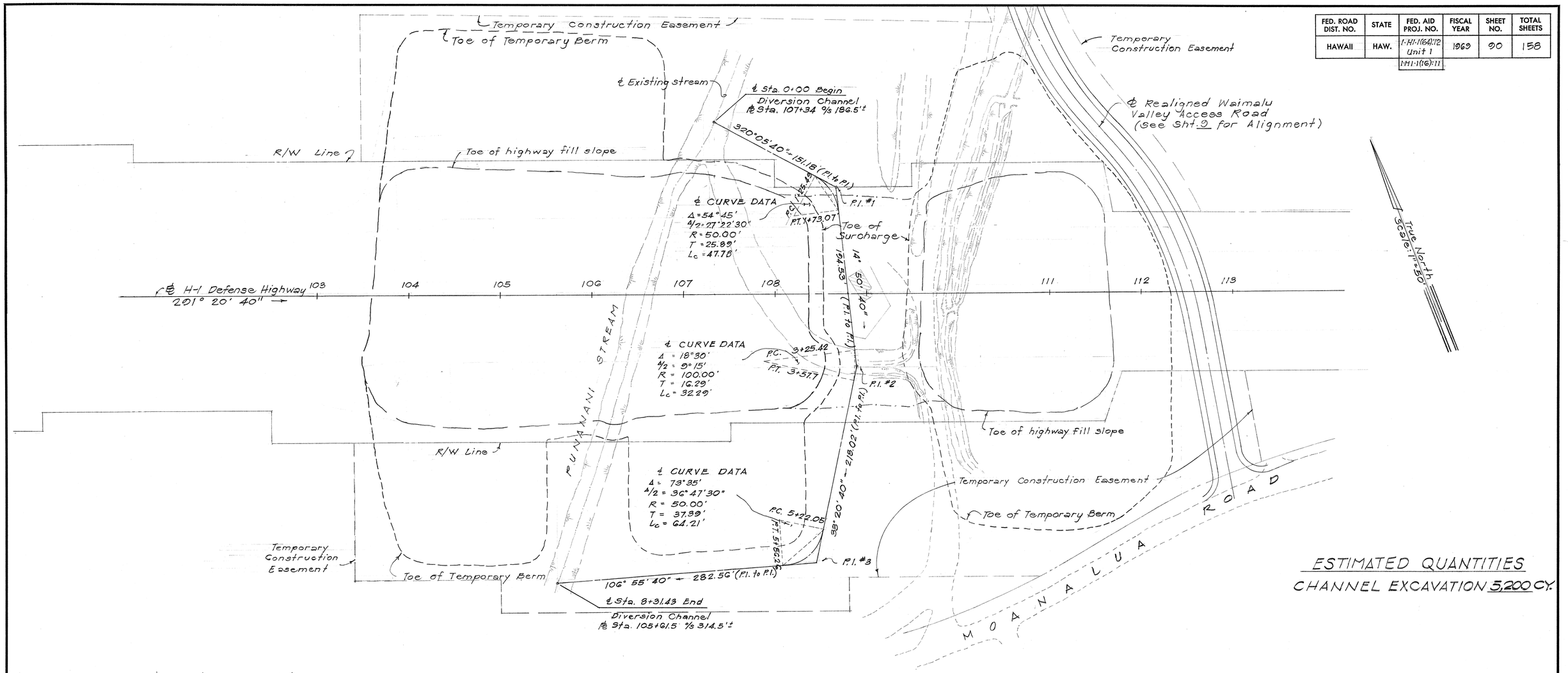

ESTIMATED QUANTITIES

CHANNEL EXCAVATION 5,200 CY.

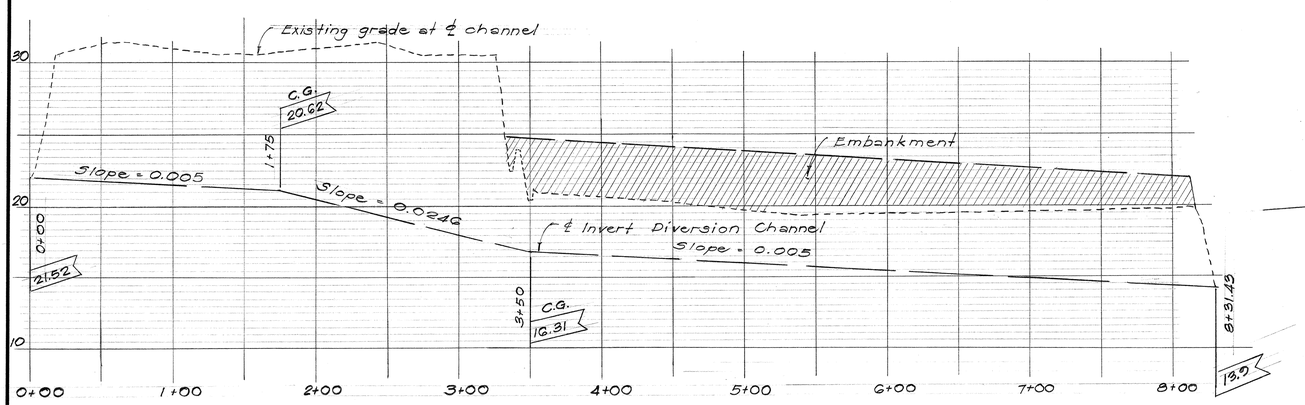

PROFILE - DIVERSION CHANNEL

Scale: Horizontal 1" = 50'
Vertical 1" = 5'

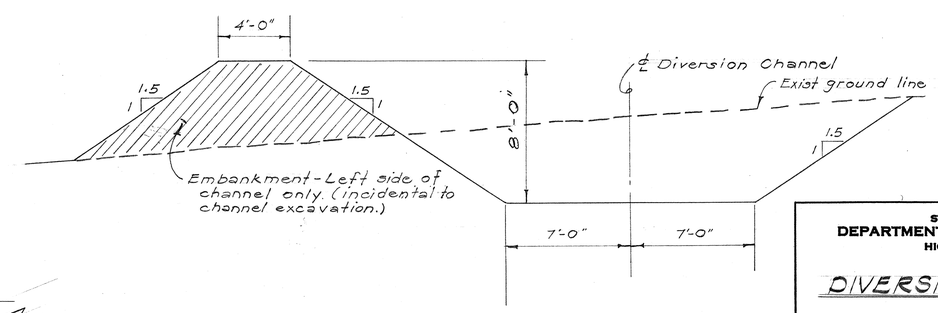

TYPICAL CHANNEL SECTION

Scale: 1/4" = 1'-0"

PAUL M. HIROTA
REGISTERED PROFESSIONAL ENGINEER
No. 1429
HAWAII, U.S.A.

THIS WORK WAS PREPARED BY ME OR UNDER MY SUPERVISION.

STATE OF HAWAII
DEPARTMENT OF TRANSPORTATION
HIGHWAYS DIVISION

DIVERSION CHANNEL

PLAN, PROFILE & DETAILS

INTERSTATE ROUTE H-1
PROJ. NO. I-HI-1(64):12, UNIT 1

Scale: As Shown Date: 8/19/68

SHEET No. 3 OF 20 SHEETS

ORIGINAL PLAN		DATE
	SURVEY PLOTTED BY	
	DRAWN BY	"
	TRACED BY	"
NOTE BOOK	DESIGNED BY	"
	QUANTITIES BY	"
No.	CHECKED BY	"

PRINTED ON NO. 1000H CLEARPRINT

9) (1)

FED. ROAD DIST. NO.	STATE	FED. AID PROJ. NO.	FISCAL YEAR	SHEET NO.	TOTAL SHEETS
HAWAII	HAW.	I-HI-1(64):12 Unit 1 (HI-1(16):11)	1969	91	158

Revised: June 30, 1969

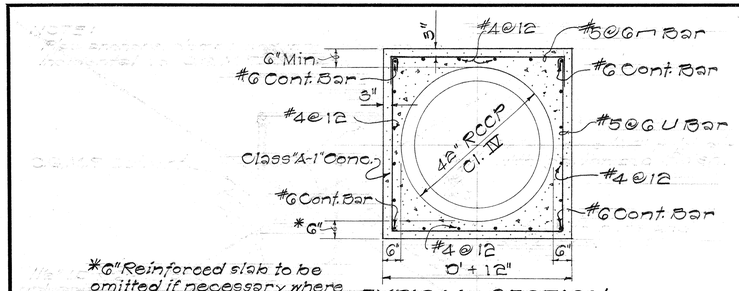

*6" Reinforced slab to be omitted if necessary where crossing sewer pipe.

TYPICAL SECTION

DETAILS OF REINF CONC. JACKET (PONO STREET)

Scale: 1/2" = 1'-0"

NOTES:

1. G.R.P. required beyond the limit of payment shall be done at the Contractor's own expense.
2. Transverse slopes of G.R.P. to follow cut slope.
3. All voids between G.R.P. & walls of excavation shall be filled with concrete. Backfilling with earth material will not be allowed

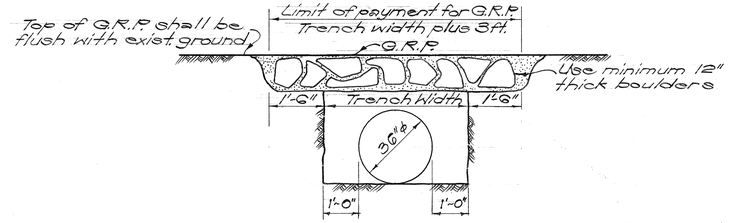

TYPICAL DETAIL OF G.R.P. SEAL OVER STORM DRAIN LINE

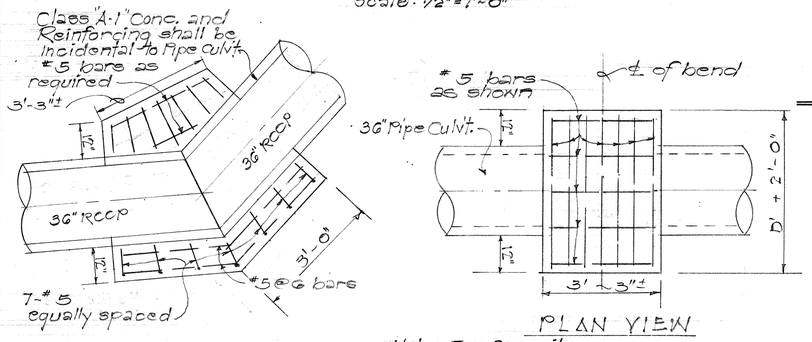

ELEVATION VIEW

PLAN VIEW

Note: For Opposite bend use similar details

CONCRETE BLOCKS FOR VERTICAL BENDS

Not to Scale

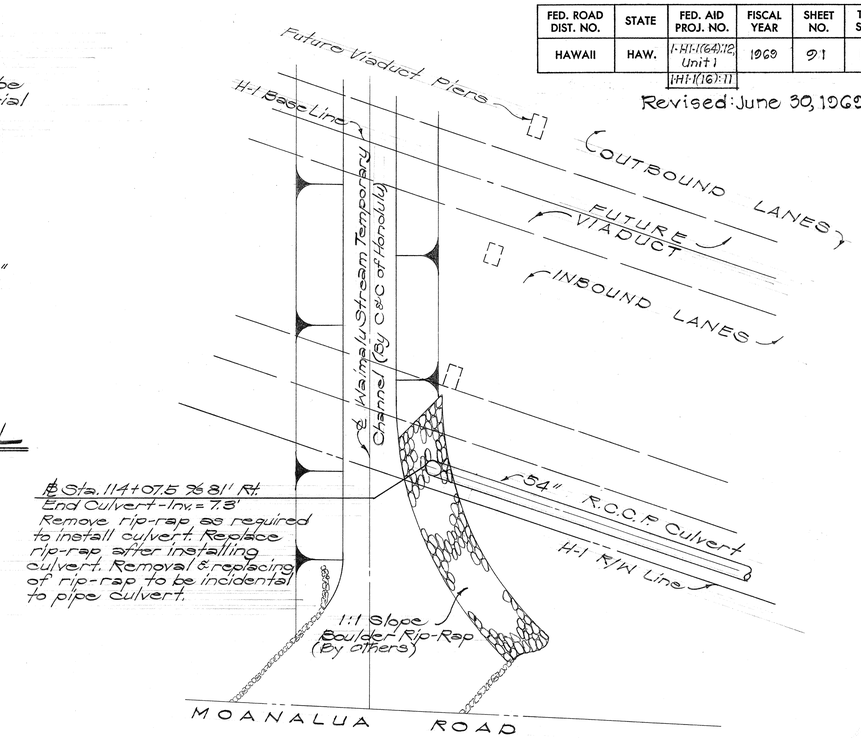

PLAN

Scale: 1" = 20'-0"

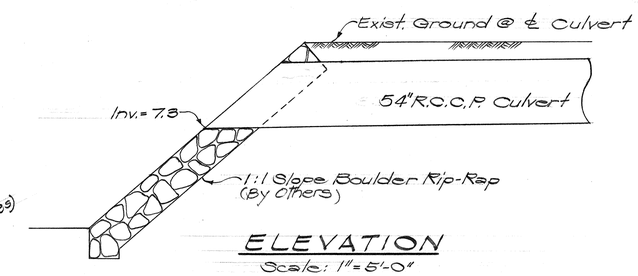

ELEVATION

Scale: 1" = 5'-0"

54" R.C.C.P. OUTLET DETAIL @ ℄ STA. 114+07.5

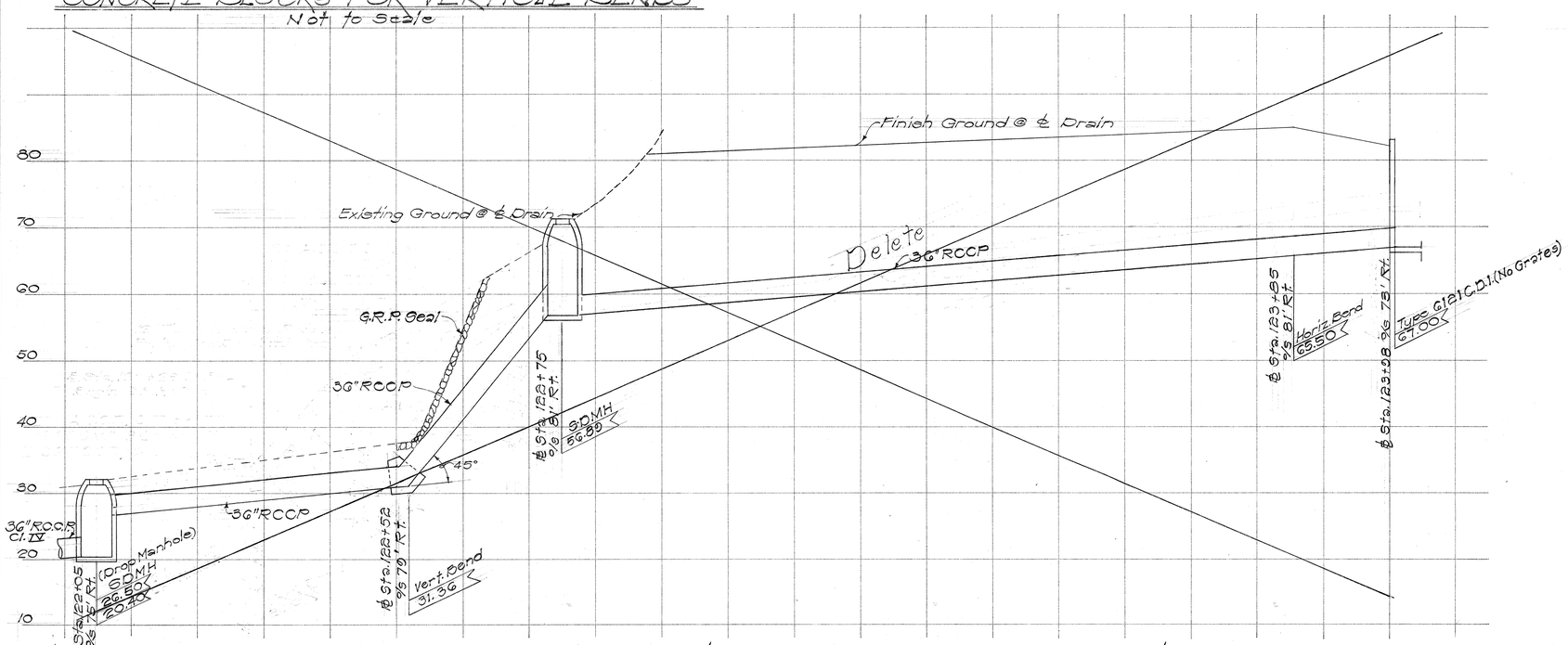

PROFILE STORM DRAIN LINE ℄ STA. 122+05 TO C.D.I. @ ℄ STA. 124+00 % RT.

Scale: 1" = 10'-0"

ORIGINAL PLAN	SURVEY PLOTTED BY	DATE
	DRAWN BY	"
	TRACED BY	"
NOTE BOOK	DESIGNED BY	"
	QUANTITIES BY	"
No.	CHECKED BY	"

PAUL M. HIROTA REGISTERED PROFESSIONAL ENGINEER No. 1 HAWAII, U.S.A.

THIS WORK WAS PREPARED BY ME OR UNDER MY SUPERVISION.

STATE OF HAWAII
DEPARTMENT OF TRANSPORTATION
HIGHWAYS DIVISION

DRAINAGE DETAILS

INTERSTATE ROUTE H-1
PROJ. NO. I-HI-1(64):12,
UNIT 1

Scale: As Shown Date: 8/19/68

SHEET No. 4 OF 20 SHEETS

PRINTED ON NO. 1000H CLEARPRINT

THIS SHEET SUPERSEDES SHEET NO. 91

C 0 9 1

FED. ROAD DIST. NO.	STATE	FED. AID PROJ. NO.	FISCAL YEAR	SHEET NO.	TOTAL SHEETS
HAWAII	HAW.	I-HI-1(64):12 Unit 1 I-HI-1(16):11	1969	92	158

Revised: June 30, 1969

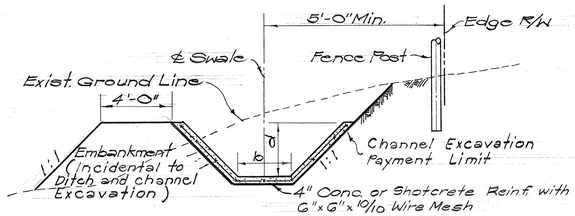

TYPE 1 TYPICAL SECTION
CUT-OFF DITCH (LINED)
Not to Scale

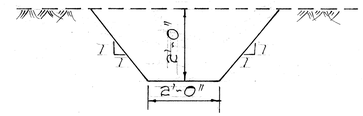

EARTH DITCH AT STA. 165+00± TO 167+00± LT & RT
Scale: 1/2" = 1'-0"

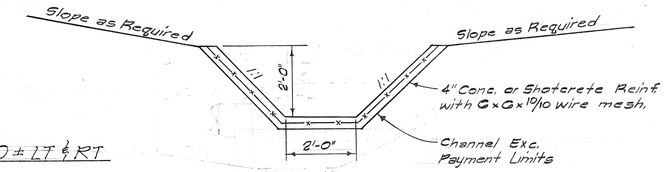

SECTION "C-C"
Scale: 1/2" = 1'-0"

SCHEDULE OF ROADWAY LINED SWALES & CUT-OFF DITCHES								
LOCATION	TYPE	MINIMUM "b" (Ft.)	MINIMUM "d" (Ft.)	SLOPE FT/FT.	ESTIMATED QUANTITIES: DITCH & CHANNEL EXCAVATION (C.Y.)	CLASS B-1 CONC. OR SHOTCRETE (C.Y.)	REINFORCING STEEL (lb.)	REMARKS
~~127+50 to 129+50 Lt.~~	~~1~~	~~2.0~~	~~2.0~~	~~0.01~~	~~116~~	~~21~~	~~685~~	
~~129+50 to 131+50 Lt.~~	~~1~~	~~2.0~~	~~2.0~~	~~0.015~~	~~160~~	~~21~~	~~685~~	
~~131+50 to 135+12 Lt.~~	~~1~~	~~2.0~~	~~2.0~~	~~0.02~~	~~43~~	~~5.2~~	~~206~~	~~Conc. Inlet @ 135+12~~
141+00 to 146+50 Lt.	1	2.0	2.0	0.01(Min)	292	54	1810	Spillway Connection @ 146+50
148+90 to 150+60 Lt.	1	2.0	2.0	Varies	71	17	555	Conc. Drop Box @ 148+90
150+60 to 154+00 Lt.	1	2.0	2.0	0.13(Max)	143	35	1102	
154+00 to 156+00 Lt.	1	2.0	2.0	0.02(Min.)	142	21	685	
156+00 to 158+70 Lt.	1	2.0	2.0	0.01(Min.)	222	28	925	
158+70 to 164+00 Lt.	1	2.0	2.5	Varies	372	58	1969	Spillway Connection @ 164+00
169+95 to 171+40 Lt.	1	2.0	2.0	0.01(Min.)	77	15	497	End Ditch @ Daylight @ 169+95

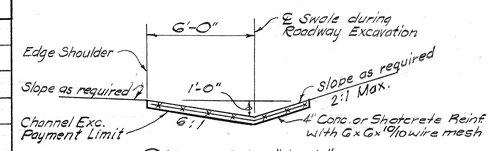

SECTION "A-A"
Scale: 1/4" = 1'-0"

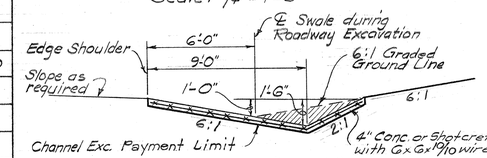

SECTION "B-B"
Scale: 1/4" = 1'-0"

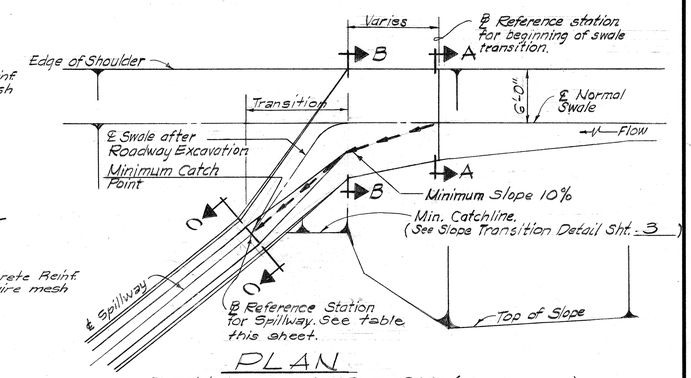

PLAN
SWALE TRANSITION (By Others)
Scale: 1/8" = 1'-0"

NOTE:
1. Reverse plan view when flow is in direction opposite to that shown.
2. The plan view and sections for the swale transition are included for information only. The swale transition is by others. The spillway shall be a part of this contract.

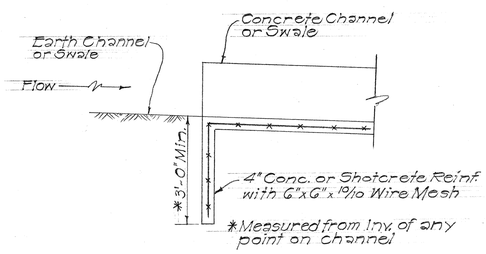

ELEVATION
Not to Scale

TYPICAL EARTH CHANNEL TO CONCRETE CHANNEL CONNECTION

SPILLWAY REFERENCE STATION AND LOCATION	
145+20	RIGHT
145+95	LEFT
163+40	RIGHT
163+50	LEFT
168+80	RIGHT
169+28	LEFT

THIS SHEET SUPERSEDES SHEET NO. 92

PAUL M. HIROTA
REGISTERED PROFESSIONAL ENGINEER
No. 1449
HAWAII, U.S.A.

THIS WORK WAS PREPARED BY ME OR UNDER MY SUPERVISION.

STATE OF HAWAII
DEPARTMENT OF TRANSPORTATION
HIGHWAYS DIVISION

DRAINAGE DETAILS

INTERSTATE ROUTE H-1
PROJ. NO. I-HI-1(64):12
UNIT 1

Scale: As Shown Date: 8/19/68

SHEET No. 5 OF 20 SHEETS

ORIGINAL PLAN	SURVEY PLOTTED BY	DATE
	DRAWN BY	
	TRACED BY	
NOTE BOOK	DESIGNED BY	
	QUANTITIES BY	
No.	CHECKED BY	

PRINTED ON NO. 1000H CLEARPRINT

(1) (1) (9) (2)

FED. ROAD DIST. NO.	STATE	FED. AID PROJ. NO.	FISCAL YEAR	SHEET NO.	TOTAL SHEETS
HAWAII	HAW.	I-HI-1(64):12 Unit 1 I-HI-1(16):11	1969	93	158

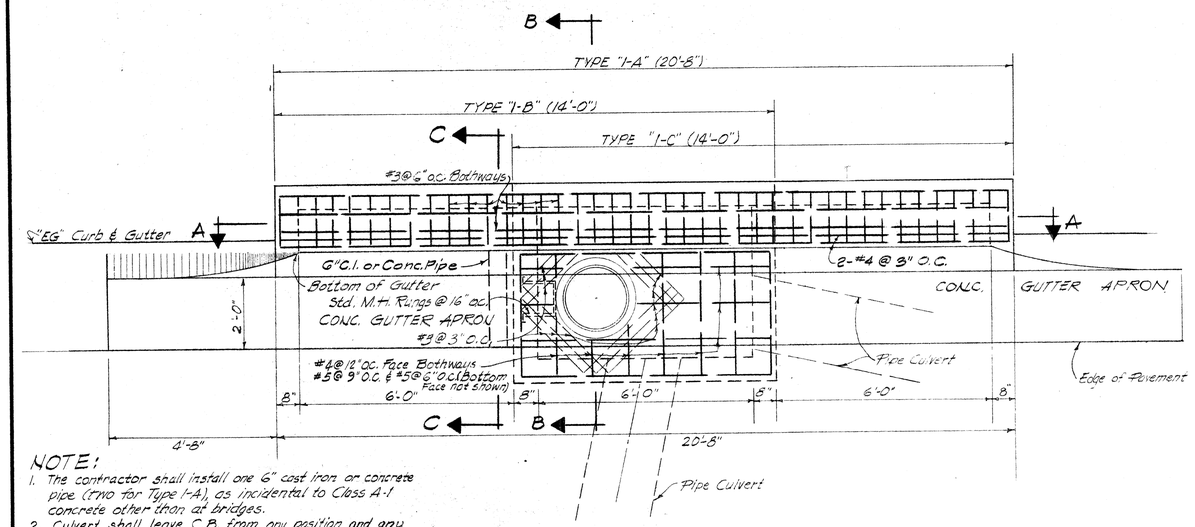

NOTE:
1. The contractor shall install one 6" cast iron or concrete pipe (two for Type 1-A), as incidental to Class A-1 concrete other than at bridges.
2. Culvert shall leave C.B. from any position and any direction indicated by plans or ordered by the Engineer. Culvert may both enter and leave C.B.
3. Location of frame and cover and/or standard manhole rings shall be determined by Engineer.

PLAN
Scale: ½" = 1'-0"

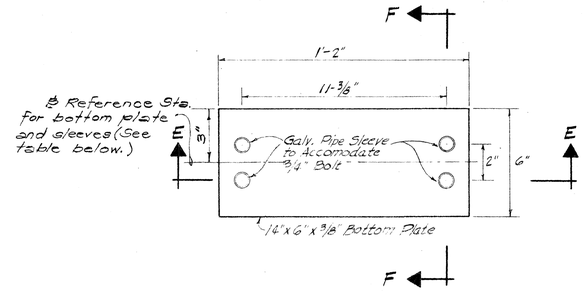

PLAN
Scale: 3" = 1'-0"

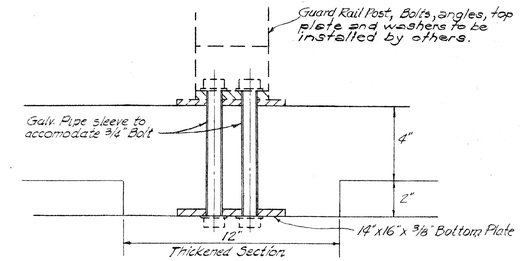

SECTION F-F
Scale: 3" = 1'-0"

NOTE:
1. Bottom plate assembly (bottom plate and sleeves) shall be installed with roof slab, incidental to reinforcing steel.
2. Exposed surfaces of the bottom plate assembly shall be painted with one prime coat and two field coats, in accordance with Section 49 of the Specifications. The choice of field coat shall be at the Contractors option.
3. Reinforcing for top slab similar to reinforcing for Type "1-A", "1-B" or "1-C", except for thickened section.
4. The bottom plate shall be Hot-Dipped Galvanized after assembly and prior to painting.

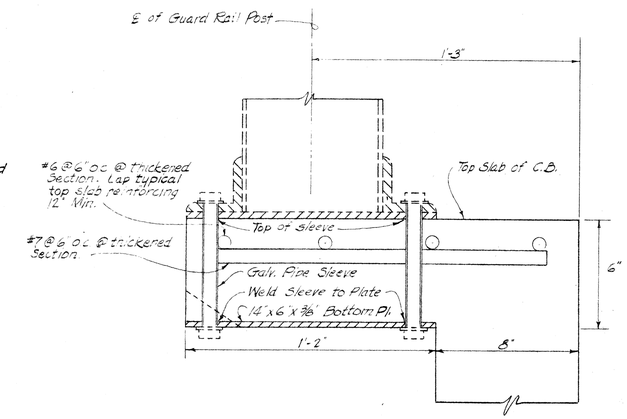

SECTION E-E
Scale: 3" = 1'-0"

DETAIL OF BOTTOM PLATE ASSEMBLY FOR GUARD RAIL POST CONNECTION

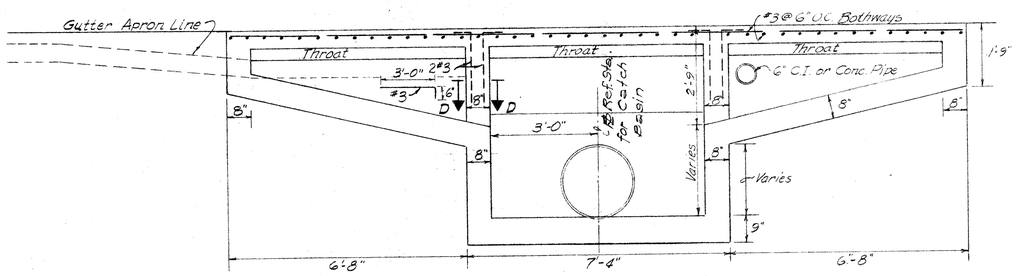

SECTION A-A
Scale: ½" = 1'-0"

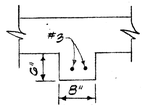

SECTION D-D
Scale: 3/4" = 1'-0"

BOTTOM PLATE ASSEMBLY LOCATION

CATCH BASIN		℄ REFERENCE STATION FOR BOTTOM PLATE ASSEMBLY		
TYPE	LOCATION			
"1-A"	183+08 Lt.	183+00.00	183+06.25	183+12.50
"1-A"	183+09 Rt.	183+02.00	183+08.25	183+14.50
"1-A"	186+72 Rt.	186+64.50	186+70.75	186+77.00

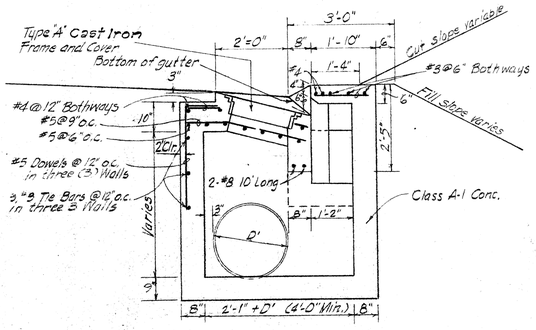

SECTION B-B
Scale: ½" = 1'-0"

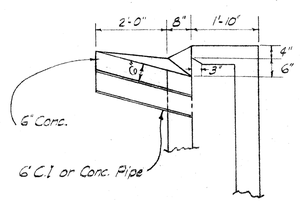

SECTION C-C
Scale: ½" = 1'-0"

DETAIL OF TYPE "1-A", "1-B" AND "1-C" CATCH BASIN

ORIGINAL PLAN		DATE
	SURVEY PLOTTED BY	
	DRAWN BY	
	TRACED BY	
NOTE BOOK	DESIGNED BY	
	QUANTITIES BY	
No.	CHECKED BY	

PAUL M. HIROTA
REGISTERED PROFESSIONAL ENGINEER
No. 1245
HAWAII, U.S.A.

THIS WORK WAS PREPARED BY ME OR UNDER MY SUPERVISION.

STATE OF HAWAII
DEPARTMENT OF TRANSPORTATION
HIGHWAYS DIVISION

DRAINAGE DETAILS

INTERSTATE ROUTE H-1
PROJ. NO. I-HI-1(64):12,
UNIT 1

Scale: As Shown Date: 8/19/68

SHEET No. 6 OF 20 SHEETS

93

PRINTED ON NO. 1000H CLEARPRINT

FED. ROAD DIST. NO.	STATE	FED. AID PROJ. NO.	FISCAL YEAR	SHEET NO.	TOTAL SHEETS
HAWAII	HAW.	I-HI-1(64)12 Unit 1 (I-H1-1(16):11)	1969	94	158

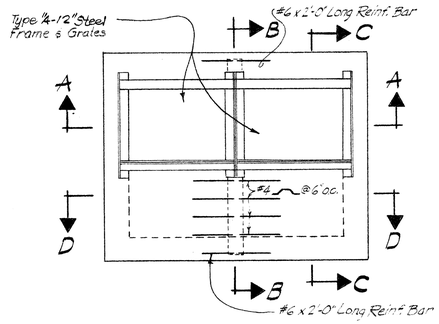

PLAN
Scale: 1/2" = 1'-0"

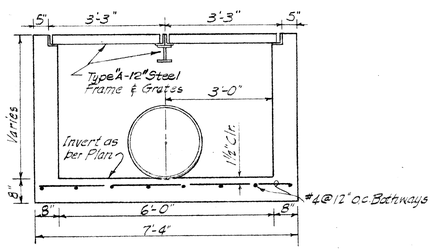

SECTION A-A
Scale: 1/2" = 1'-0"

CATCH BASIN - TYPE "1-D

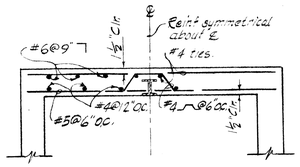

SECTION D-D
Scale: 1/2" = 1'-0"

NOTES (For CB's Only):
1. Reinforcing steel in top slab and walls to be incidental to Type "A-12" Steel Frame and Grates. Reinforcing steel in bottom slab to be paid for as Reinforcing steel other than in bridges.

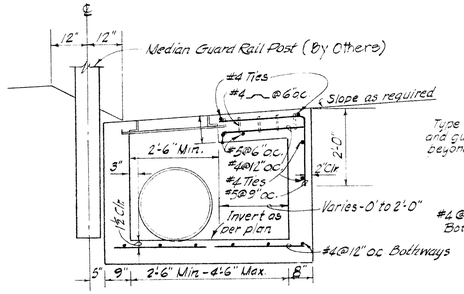

(IN MEDIAN AREAS)

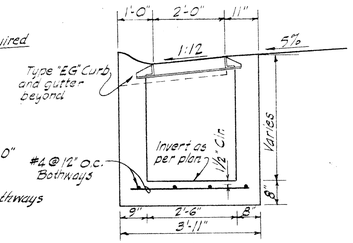

(AT CURB & GUTTER SECTIONS)

TYPICAL SECTIONS "C-C"
Scale: 1/2" = 1'-0"

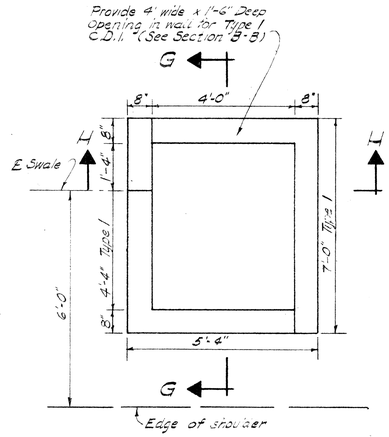

PLAN
Scale: 1/2" = 1'-0"

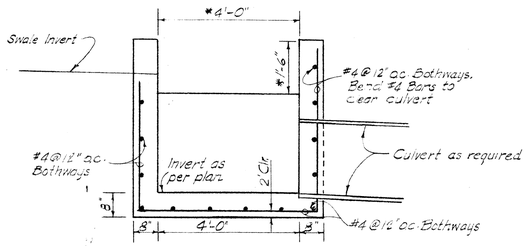

SECTION "H-H"
Scale: 1/2" = 1'-0"

NOTES (For C.D.I. Only):
1. Swale can enter C.D.I. from either side. Plan view changes accordingly.
2. Pipe culvert can leave and/or enter C.D.I. from any direction.

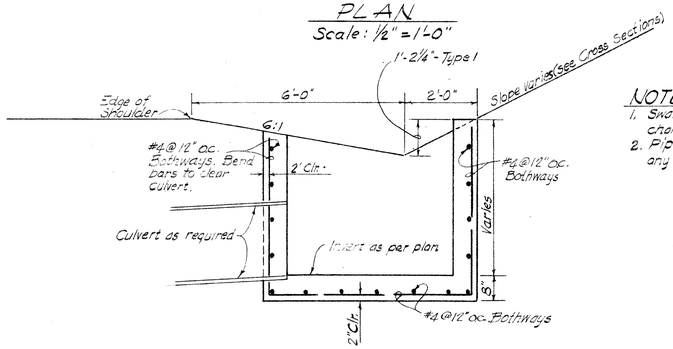

SECTION "G-G"
Scale: 1/2" = 1'-0"

TYPE 1 CONC. DROP INTAKE (C.D.I.) DETAILS

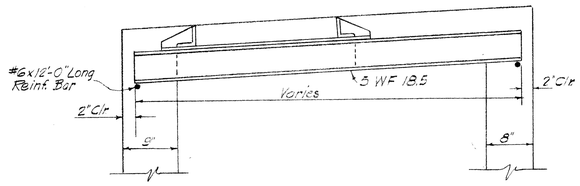

TYPICAL SECTIONS "B-B"
Scale: 1" = 1'-0"

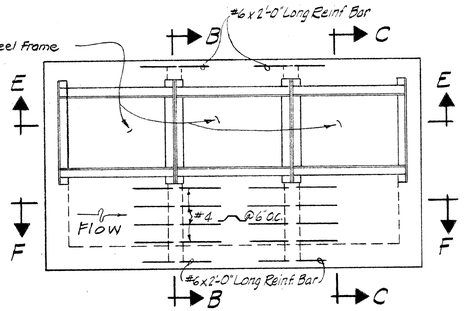

PLAN
Scale: 1/2" = 1'-0"

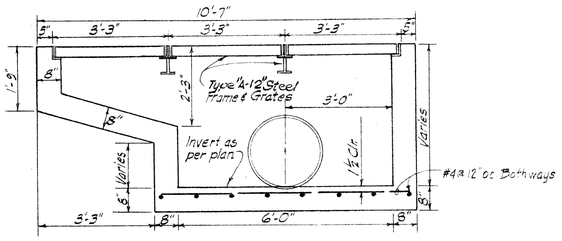

SECTION E-E
Scale: 1/2" = 1'-0"

CATCH BASIN - TYPE "1-E"

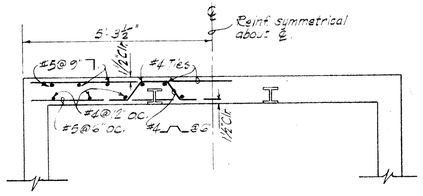

SECTION F-F
Scale: 1/2" = 1'-0"

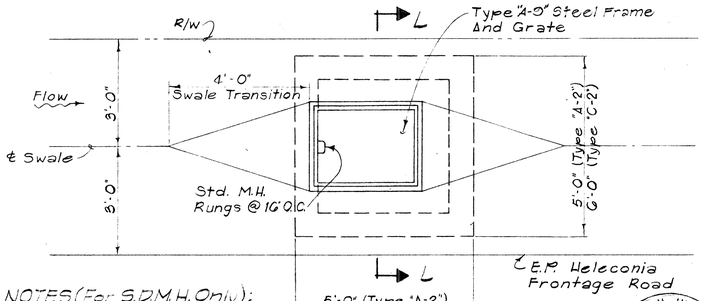

PLAN
Scale: 1/2" = 1'-0"

NOTES (For S.D.M.H. Only):
1. Reinforcing dimensions & detail "A-2" & "C-2" S.D.M.H. same as for Type "A" & "C" S.D.M.H. except top slab and dimensions as shown.
2. Standard M.H. rungs to be incidental to class "A-1" concrete. See Sht. 90 for Details.

STORM DRAIN MAN-HOLE - TYPE "A-2 & "C-2"

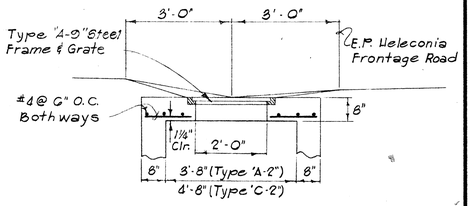

SECTION "L-L"
Scale: 1/2" = 1'-0"

PAUL M. HIROTA
REGISTERED PROFESSIONAL ENGINEER
No. 1429
HAWAII, U.S.A.

THIS WORK WAS PREPARED BY ME OR UNDER MY SUPERVISION.

STATE OF HAWAII
DEPARTMENT OF TRANSPORTATION
HIGHWAYS DIVISION

DRAINAGE DETAILS

INTERSTATE ROUTE H-1
PROJ. NO. I-HI-1(64):12,
UNIT 1

Scale: As Shown Date: 8/19/68

SHEET No. 7 OF 20 SHEETS

ORIGINAL PLAN		DATE
	SURVEY PLOTTED BY	
	DRAWN BY	
	TRACED BY	
	DESIGNED BY	
NOTE BOOK	QUANTITIES BY	
No.	CHECKED BY	

PRINTED ON NO. 1000H CLEARPRINT

FED. ROAD DIST. NO.	STATE	FED. AID PROJ. NO.	FISCAL YEAR	SHEET NO.	TOTAL SHEETS
HAWAII	HAW.	I-H1-1(64):12 Unit 1 H1:1 (16):11	1969	95	158

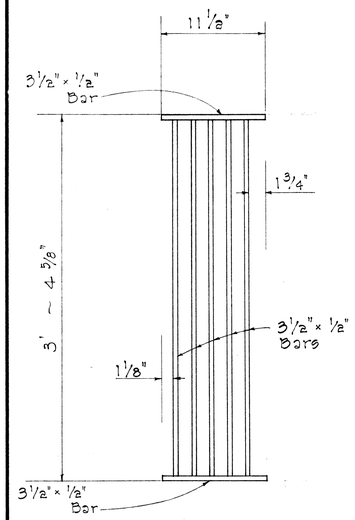

PLAN
Scale: 1 1/2" = 1'-0"

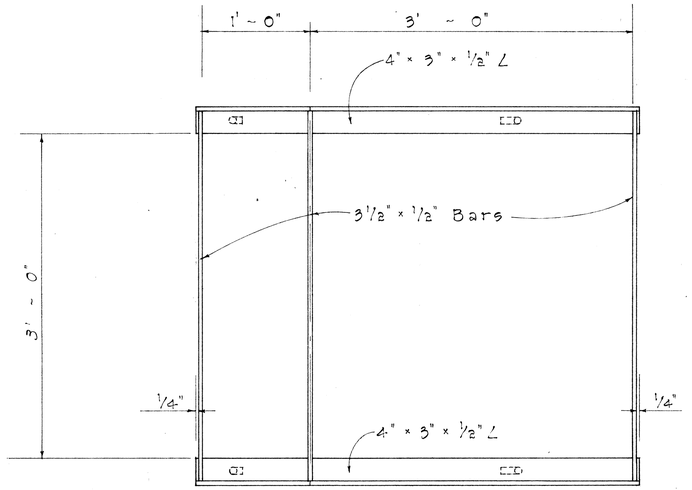

PLAN
Scale: 1 1/2" = 1'-0"

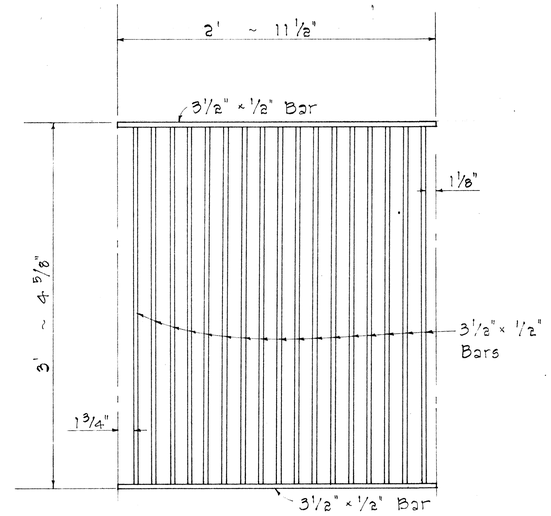

PLAN
Scale: 1 1/2" = 1'-0"

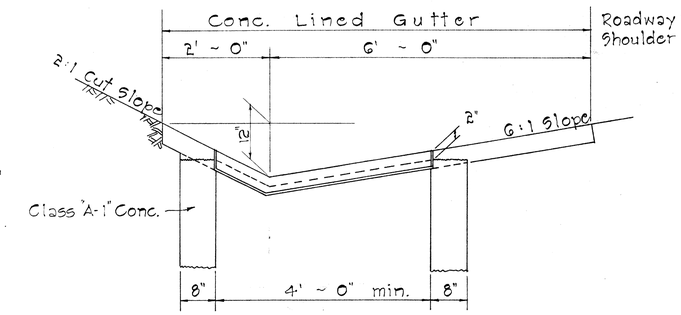

SECTION VIEW
Scale: 3/4" = 1'-0"

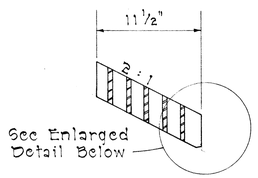

SECTION
Scale: 1 1/2" = 1'-0"

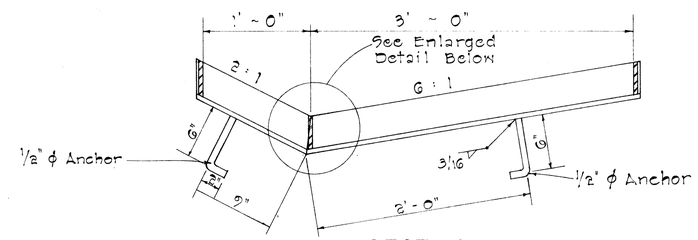

SECTION
Scale: 1 1/2" = 1'-0"

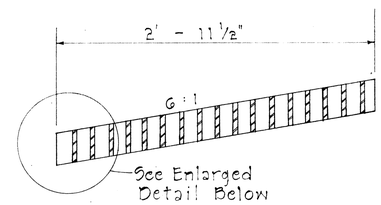

SECTION
Scale: 1 1/2" = 1'-0"

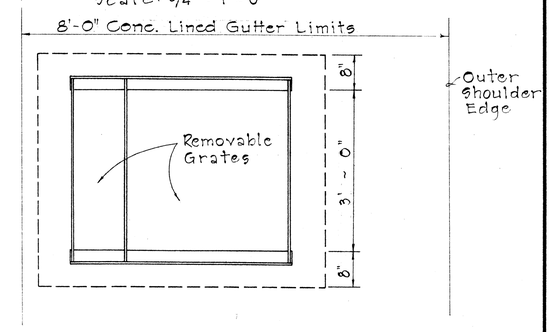

PLAN VIEW
Scale: 3/4" = 1'-0"

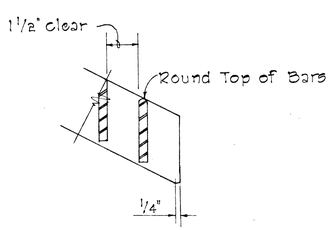

GRATE ON 2:1 SLOPE
Scale: 3" = 1'-0"

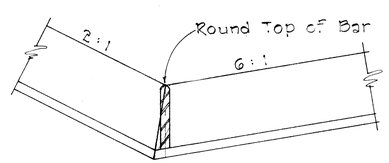

FRAME
Scale: 3" = 1'-0"

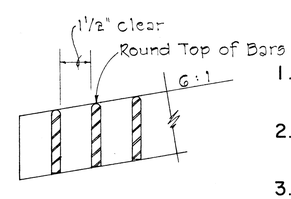

GRATE ON 6:1 SLOPE
Scale: 3" = 1'-0"

GENERAL NOTES

1. Contractor has the option of using welded steel grate.
2. Grates and Frames shall be hot dip galvanized after fabrication, see specifications.
3. All welds 3/8" unless otherwise noted.
4. The various materials shall conform to the specifications of ASTM as listed in the following tabulation and the Standard Specifications.

Material	ASTM Designation
Structural Steel	A283, Grade D
Cast Steel	A27, Grade 65-35
Malleable Iron Casting	A47, Gr. No. 35018

DETAIL OF TYPE 6121 STEEL FRAME AND GRATE

STATE OF HAWAII
DEPARTMENT OF TRANSPORTATION
HIGHWAYS DIVISION

DRAINAGE DETAIL
TYPE 6121
STEEL FRAME & GRATE

INTERSTATE ROUTE H-1
PROJ. No. I-H1-1(64):12, UNIT 1

Scale: As Shown Date: Jan. 1969

SHEET No. 8 OF 20 SHEETS

ORIGINAL PLAN		DATE
	SURVEY PLOTTED BY	
	DRAWN BY	
	TRACED BY	
NOTE BOOK	DESIGNED BY	
	QUANTITIES BY	
No.	CHECKED BY	

PRINTED ON NO. 1000H CLEARPRINT

95

FED. ROAD DIST. NO.	STATE	FED. AID PROJ. NO.	FISCAL YEAR	SHEET NO.	TOTAL SHEETS
HAWAII	HAW.	I-H(64): 12, Unit 1	1969	CO95S-1	158

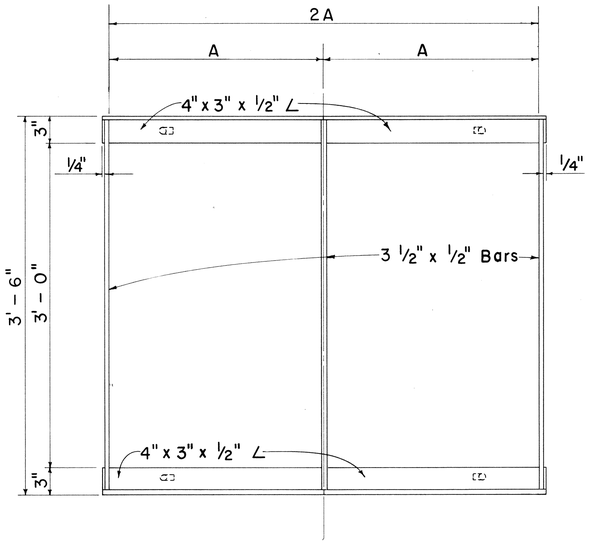

PLAN
Scale: 1 1/2" = 1'-0"

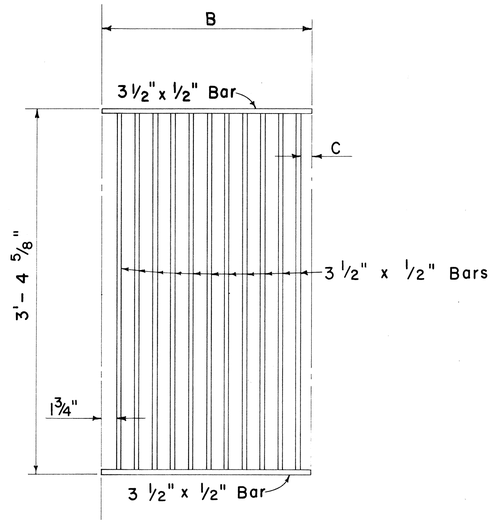

PLAN
Scale: 1 1/2" = 1'-0"

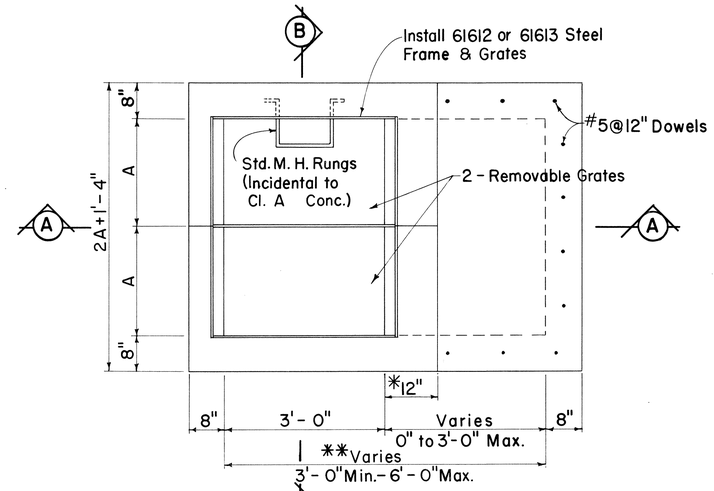

PLAN

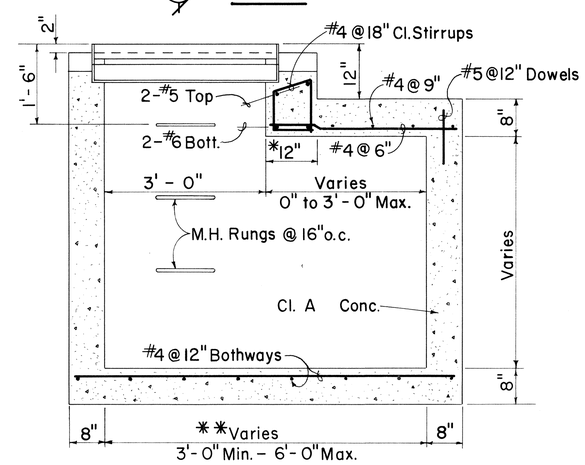

SECTION A-A

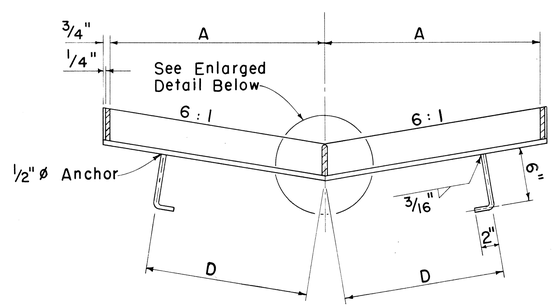

SECTION
Scale: 1 1/2" = 1'-0"

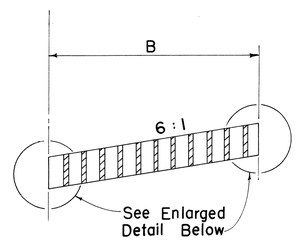

SECTION
Scale: 1 1/2" = 1'-0"

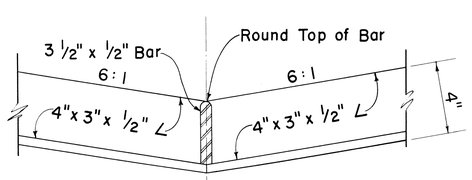

FRAME
Scale: 3" = 1'-0"

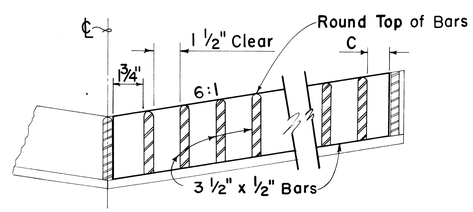

GRATE
Scale: 3" = 1'-0"

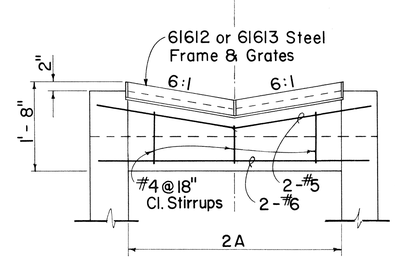

SECTION B-B

DETAILS OF TYPE 61612 OR 61613 STEEL FRAME AND GRATES

DETAILS OF 61612 OR 61613 DROP INTAKE

Scale: 3/4" = 1'-0"

*For Minimum size box of 3'-0", use 8" and eliminate reinforcing steel shown in the top portion.

**For Culverts larger than 30", the minimum dimension shall be D'.

GENERAL NOTES

1. Grates and Frames shall be hot dip galvanized after fabrication, see specifications.
2. All welds 3/8" unless otherwise noted.
3. Refer to "Spacing Table" for Types 61612 & 61613 Drop Intake and Frame & Grates dimensions.
4. The Frame & Grate materials shall conform to the specifications of ASTM Designation Structural Steel A283, Grade D and the Standard Specifications.
5. Culvert shall leave Drop Intake from any position and any direction indicated by plans or ordered by the Engineer. Culverts may both enter and leave Drop Intake so that Drop Intake will act as manhole.

SPACING TABLE

TYPE	NO. BARS	A	B	C	D
61612	11	2'-0"	1'-11 1/2"	1 1/4"	1'-6"
61613	17	3'-0"	2'-11 1/2"	1 1/8"	2'-0"

ORIGINAL PLAN		
	SURVEY PLOTTED BY	DATE
	DRAWN BY	" "
	TRACED BY	" "
	DESIGNED BY	" "
NOTE BOOK	QUANTITIES BY	" "
No.	CHECKED BY	" "

STATE OF HAWAII
DEPARTMENT OF TRANSPORTATION
HIGHWAYS DIVISION

STANDARD DETAILS

TYPE 61612 & 61613
GRATED DROP INTAKES

Scales: As Noted — Date: Feb. 1969

SHEET No. OF SHEETS

CO 95 S(1)

FED. ROAD DIST. NO.	STATE	FED. AID PROJ. NO.	FISCAL YEAR	SHEET NO.	TOTAL SHEETS
HAWAII	HAW.	I-HI-1(64):12 Unit 1 I-HI-1(16):11	1969	96	158

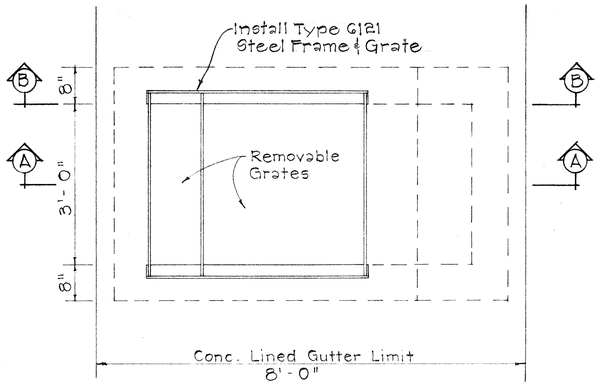

PLAN

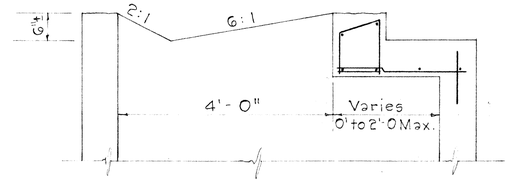

SECTION "B-B"
(OPPOSITE WALL SIMILAR)

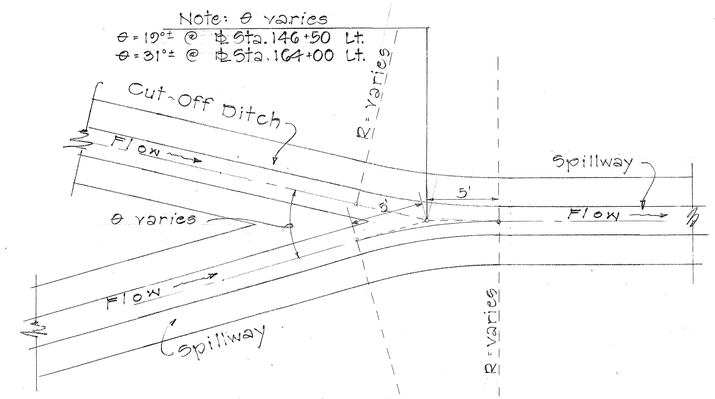

PLAN

TYPICAL - SPILLWAY CONNECTION

Scale: 1" = 5'-0"

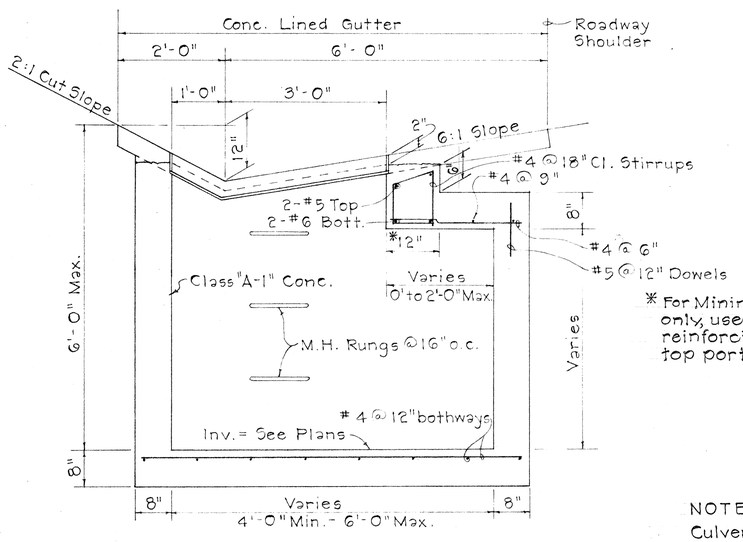

SECTION "A-A"

* For Minimum size box of 4'-0" only, use 8" and eliminate reinforcing steel shown in the top portion.

NOTE:
Culvert shall leave C.D.I. from any position and any direction indicated by plans or ordered by the Engineer. Culvert may both enter and leave C.D.I. so that C.D.I. will act as manhole.

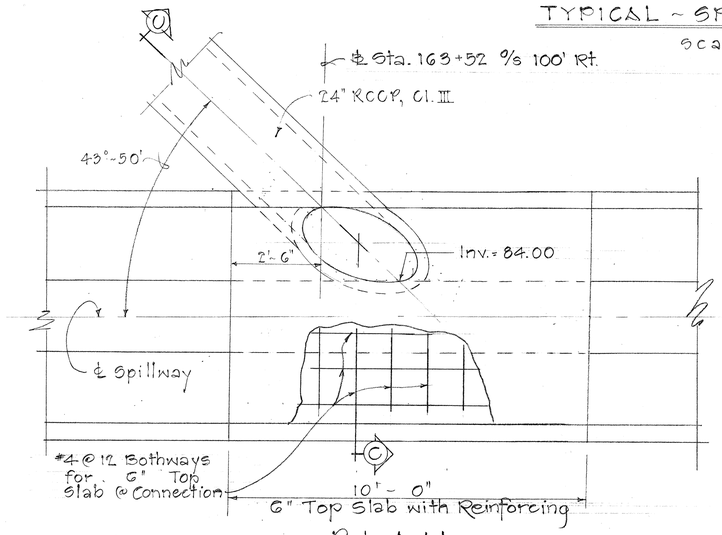

PLAN

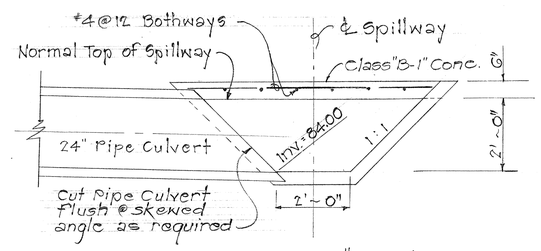

SECTION "C-C"

PIPE CULVERT CONNECTION TO SPILLWAY
AT ℄ STA. 163+52 % 100' RT.

Scale: 1/2" = 1'-0"

DETAILS OF CONCRETE DROP INTAKE FOR TYPE G121 STEEL FRAME & GRATE

Scale: 3/4" = 1'-0"

ORIGINAL PLAN		DATE
	SURVEY PLOTTED BY	
	DRAWN BY	
	TRACED BY	
NOTE BOOK	DESIGNED BY	
	QUANTITIES BY	
No.	CHECKED BY	

STATE OF HAWAII
DEPARTMENT OF TRANSPORTATION
HIGHWAYS DIVISION

DRAINAGE DETAILS

INTERSTATE ROUTE H-1
PROJ. NO. I-HI-1(64):12, UNIT 1

Scale: As Shown Date: Jan. 1969

SHEET No. 9 OF 20 SHEETS

9 6

PRINTED ON NO. 1000H CLEARPRINT

FED. ROAD DIST. NO.	STATE	FED. AID. PROJECT	FISCAL YEAR	SHEET NO.	TOTAL SHEETS
HAWAII	HAWAII	I-H1-1(64):12 Unit 1 I-H1-1(16):11	1969	97	158

NOTE:

1. All welds 3/8" unless otherwise noted.
2. All steel shall be structural grade.
3. Grates and Frame shall be hot dip galvanized after fabrication in accordance with Section 44(H) of the Standard Specifications.
4. Detail of Types "A-1" and "A-2" Steel Frame and Grates are identical except for the thickness of end spacers and number of grate bars. See Table of End Spacer Thickness.

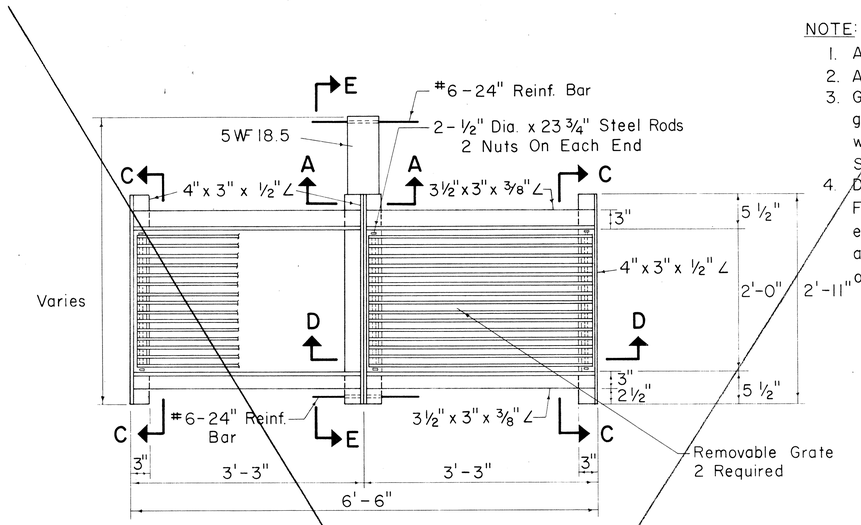

PLAN

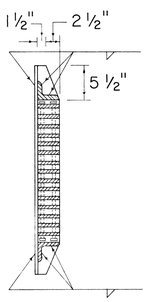

SECTION C-C

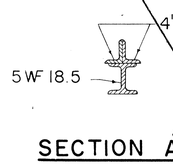

SECTION A-A

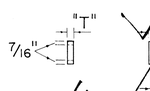

END SPACER

TABLE OF END SPACER THICKNESS

TYPE FRAME & GRATES	"T" (in.)
A-1	1
A-2	1 3/8

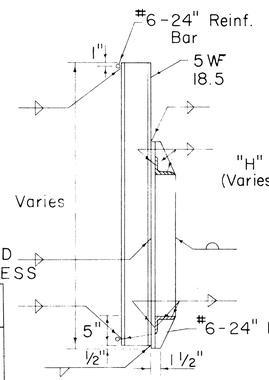

SECTION E-E

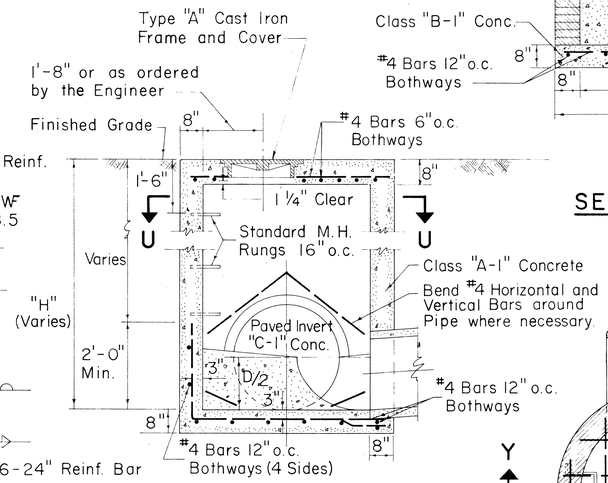

SECTION V-V

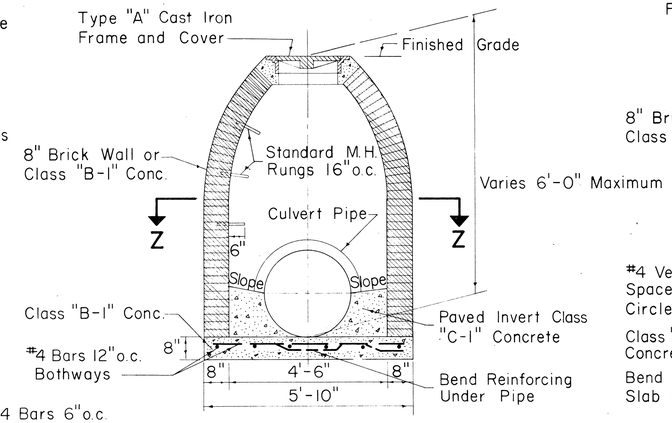

SECTION Y-Y

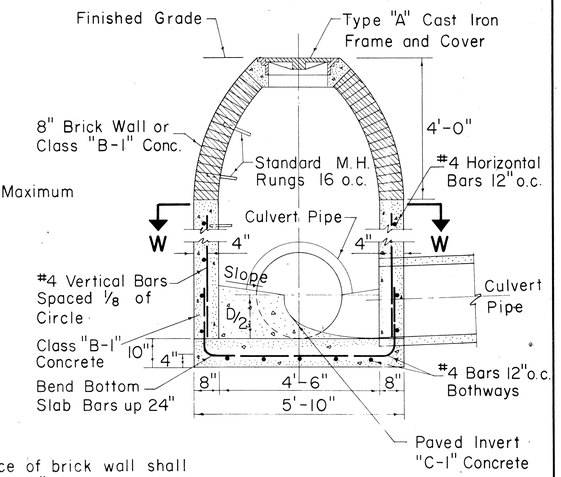

SECTION X-X

NOTE:

1. Exterior surface of brick wall shall be plastered with 1" thickness of 1:2 Cement Mortar.
2. Number size and direction of culvert pipes at manhole to be as shown on plans.
3. Paved invert not required at drop manholes.
4. All Class "C-1" Concrete to be incidental to Class "B-1" Concrete.

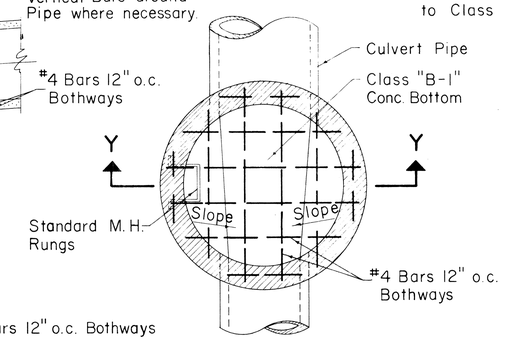

SECTION Z-Z

TYPE "D" STORM DRAIN MANHOLE

Scale: 1/2" = 1'-0"

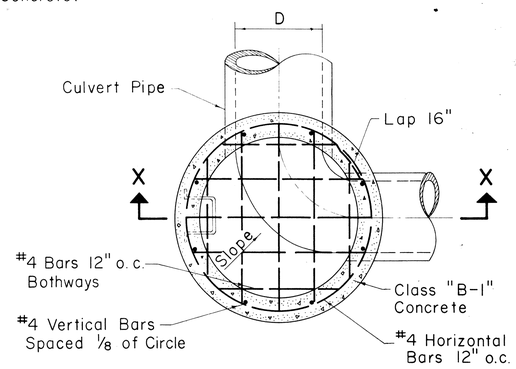

SECTION W-W

TYPE "E" STORM DRAIN MANHOLE

Scale: 1/2" = 1'-0"

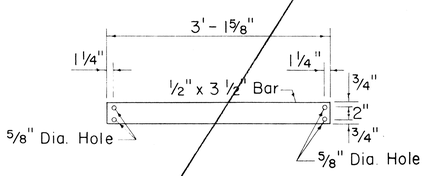

GRATE BARS

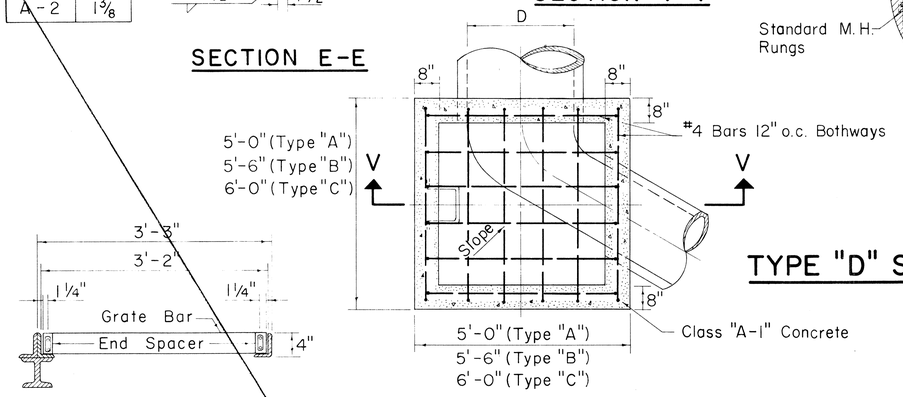

SECTION U-U

TYPE "A", "B", & "C"

S.D.M.H.

Scale: 1/2" = 1'-0"

SECTION D-D

DETAIL OF TYPE "A-1" & "A-2" STEEL FRAME AND GRATES

Scale: 1" = 1'-0"

APPROVED:

DIRECTOR OF TRANSPORTATION DATE

STATE OF HAWAII
DEPARTMENT OF TRANSPORTATION
HIGHWAYS DIVISION

STANDARD DETAILS

STEEL FRAME AND GRATES AND STORM DRAIN MANHOLES

Scales: As Noted Date 8/12/68

SHEET NO. 10 OF 20 SHEETS

97

FED. ROAD DIST. NO.	STATE	FED. AID PROJ. NO.	FISCAL YEAR	SHEET NO.	TOTAL SHEETS
HAWAII	HAW.	F-HI-1(64)12 Unit 1 / F-HI-1(16):11	1969	98	158

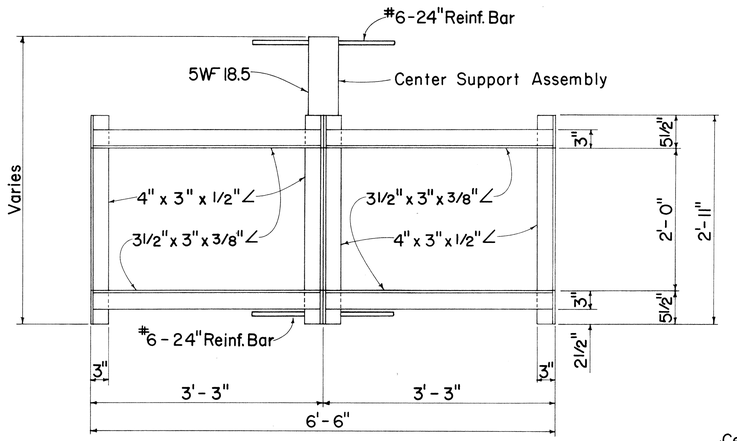

PLAN
(Two or More Grates)

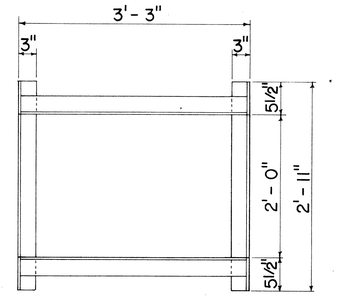

PLAN
(Single Grate)

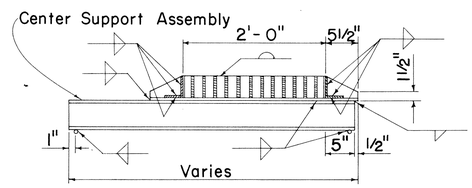

CROSS SECTION
(Thru Frame & Grate)

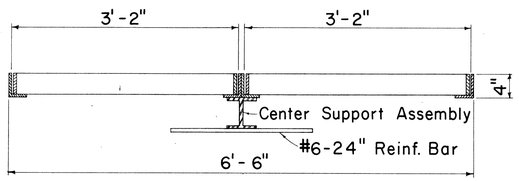

LONGITUDINAL SECTION
(Thru Frame & Grate)

FRAME DETAILS

Scale: 1" = 1'- 0"

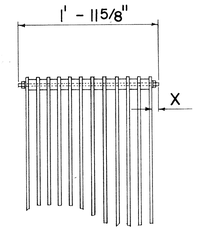

BOLTED END BLOCK
Scale: 1" = 1'- 0"

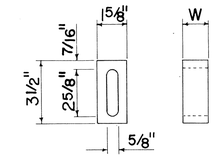

BAR SPACER
Scale: 3" = 1'- 0"

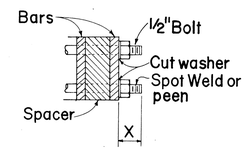

BOLTING DETAIL
Scale: 3" = 1'- 0"

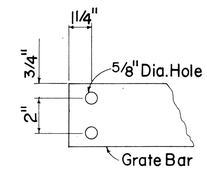

END OF BAR
Scale: 3" = 1'- 0"

ALTERNATIVE BOLTED GRATE

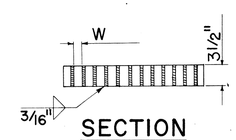

SECTION

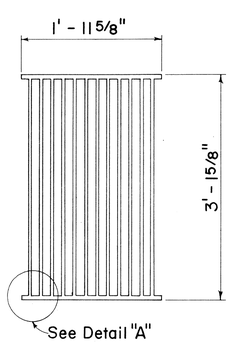

PLAN
Scale: 1" = 1'- 0"

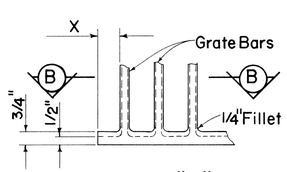

DETAIL "A"
Scale: 3" = 1'- 0"

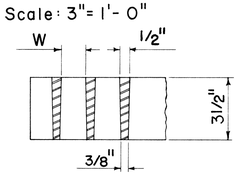

SECTION "B-B"
Scale: 3" = 1'- 0"

ALTERNATIVE CAST MALLEABLE IRON OR CAST STEEL GRATE

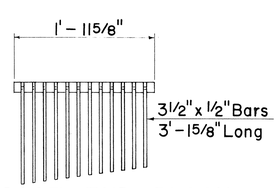

CAST END BLOCK
Scale: 1" = 1'- 0"

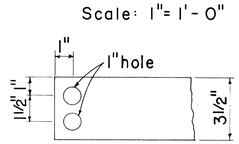

END OF BAR
Scale: 3" = 1'- 0"

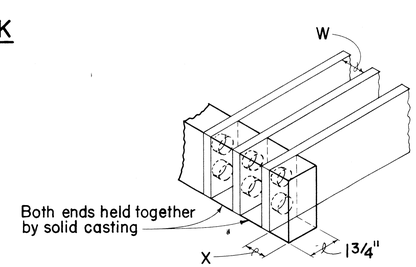

ALTERNATIVE CAST MALLEABLE IRON OR CAST STEEL END BLOCK GRATE

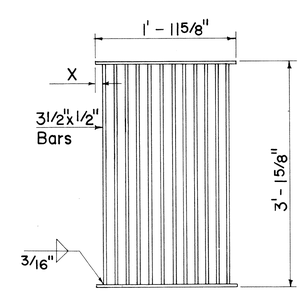

PLAN

ALTERNATIVE WELDED GRATE

Scale: 1" = 1'- 0"

GENERAL NOTES

1. Contractor has the option of using cast malleable iron, cast steel, welded, bolted or cast steel end block grate.
2. Grates and Frames shall be hot dip galvanized after fabrication, see specifications.
3. All welds 3/8" unless otherwise noted.
4. Center support assembly shall be used when two or more grates are specified. Incidental to Types A-9 or A-12 Frame and Grates.
5. Refer to "Grate Bar Spacing Table" for Types A-9 and A-12 Grate dimensions.
6. The various materials shall conform to the specifications of ASTM as listed in the following tabulation and the Std. Specifications.

Material	ASTM Designation
Structural Steel	A283, Grade D
Cast Steel	A27, Grade 65-35
Malleable Iron Casting	A47, Gr. No. 35018

GRATE BAR SPACING TABLE

TYPE	NO. BARS	CLEAR BAR SPACING - W	X
A-9	9	2"	1 9/16"
A-12	12	1 3/8"	1 1/4"

NOTE:

1. Type A-9 – Use in locations off the roadbed on all types of highways.
2. Type A-12 – Use within the roadbed on all types of highways.

STATE OF HAWAII
DEPARTMENT OF TRANSPORTATION
HIGHWAYS DIVISION

STANDARD DETAILS

TYPES A-9 AND A-12
FRAMES AND GRATES

Scales: As Noted — Date: Aug. 1968

SHEET No. 11 OF 20 SHEETS

ORIGINAL PLAN		DATE
	SURVEY PLOTTED BY	
	DRAWN BY L. C. A. M.	7/68
	TRACED BY L. C. A. T.	8/68
NOTE BOOK	DESIGNED BY " " "	7/68
	QUANTITIES BY " " "	
No.	CHECKED BY " " "	8/68

2/17/59
8/17/59

FED. ROAD DIST. NO.	STATE	FED. AID PROJ. NO.	FISCAL YEAR	SHEET NO.	TOTAL SHEETS
[illegible]	HAW.	I-H1-1(16)11 Unit 1	1969	99	158

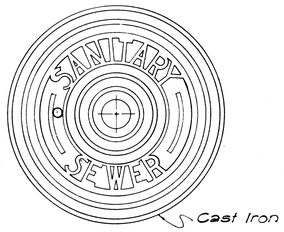

TOP VIEW OF COVER

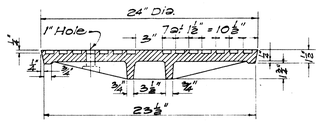

SECTION

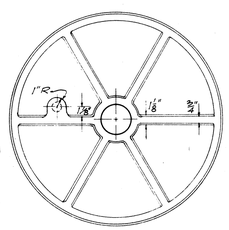

BOTTOM VIEW OF COVER

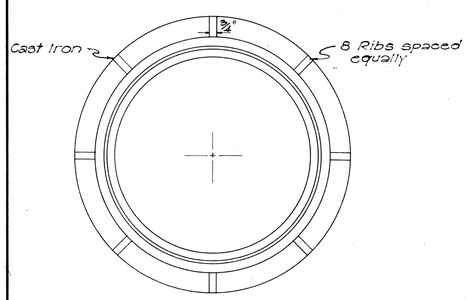

PLAN OF RIM

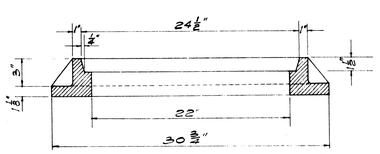

SECTION OF RIM

DETAILS OF TYPE "S" CAST IRON FRAME AND COVER

SCALE: 1-1/2" = 1'-0"

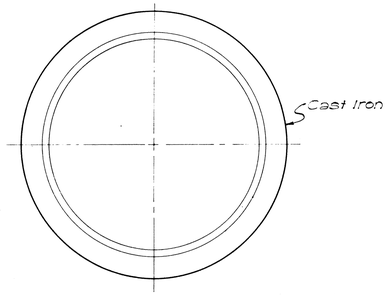

PLAN OF RIM

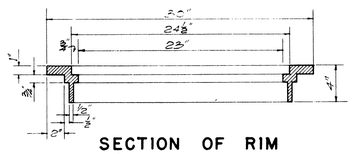

SECTION OF RIM

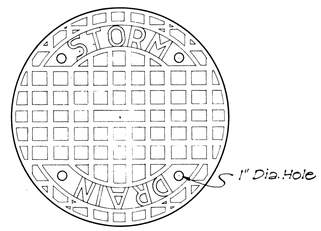

TOP VIEW OF COVER

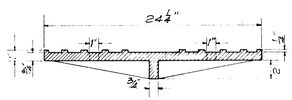

SECTION

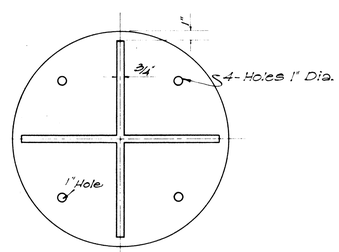

BOTTOM VIEW OF COVER

DETAILS OF TYPE "B" CAST IRON FRAME AND COVER

SCALE: 1-1/2" = 1'-0"

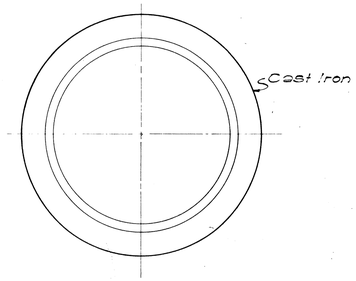

PLAN OF RIM

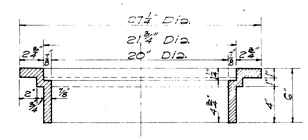

SECTION OF RIM

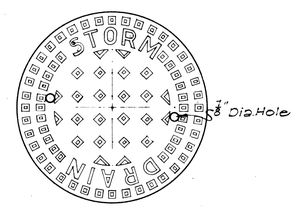

TOP VIEW OF COVER

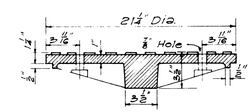

SECTION

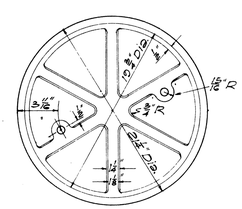

BOTTOM VIEW OF COVER

DETAILS OF TYPE "A" CAST IRON FRAME AND COVER

SCALE: 1-1/2" = 1'-0"

NOTE: Stock Pattern From Novelty Foundry (Honolulu)

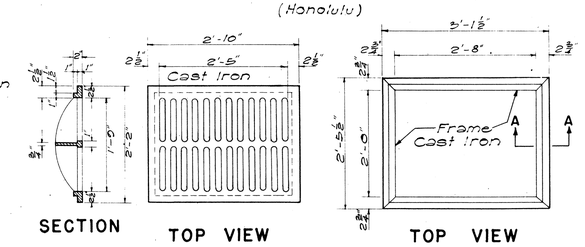

SECTION TOP VIEW TOP VIEW

TYPE C C.I. FRAME AND GRATING

SCALE: 3/4" = 1'-0"

SECTION "A-A"
SCALE 3" = 1'-0"

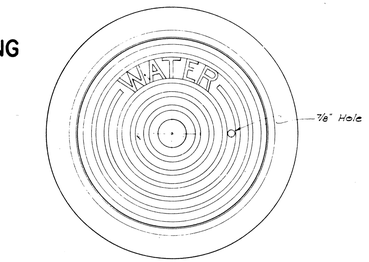

PLAN OF FRAME AND COVER

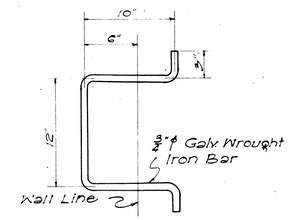

MANHOLE RUNG

SCALE: 1-1/2" = 1'-0"

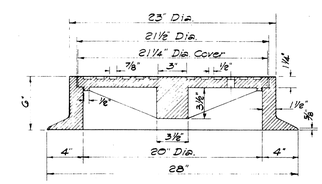

SECTION OF FRAME AND COVER

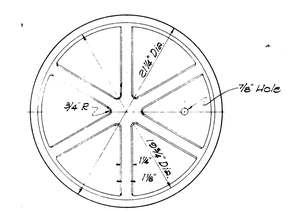

BOTTOM VIEW OF COVER

DETAILS OF TYPE "W" CAST IRON FRAME AND COVER

SCALE: 1-1/2" = 1'-0"

NOTE:

THE TYPE "S" CAST IRON FRAME AND COVER SHOWN ON THIS SHEET IS EQUIVALENT TO THE CITY AND COUNTY OF HONOLULU, DIVISION OF SEWERS' TYPE "SA" CAST IRON MANHOLE FRAME AND COVER.

THE TYPE "W" CAST IRON FRAME AND COVER SHOWN ON THIS SHEET IS EQUIVALENT TO THE CITY AND COUNTY OF HONOLULU, BOARD OF WATER SUPPLY'S CAST IRON MANHOLE FRAME AND COVER, 20" SIZE.

STATE OF HAWAII
DEPARTMENT OF TRANSPORTATION
HIGHWAYS DIVISION

STANDARD DETAILS

CATCH BASIN AND MANHOLE CASTINGS

SCALES AS NOTED

SHEET Nº 12 OF 20 SHEETS

ORIGINAL PLAN	SURVEY PLOTTED BY: DESIGNED BY: DRAWN BY: TRACED BY: QUANTITIES BY: CHECKED BY:	DATE: " " " " " "
NOTE BOOK No.		

J. Calistro

FED. ROAD DIST. NO.	STATE	FED. AID PROJ. NO.	FISCAL YEAR	SHEET NO.	TOTAL SHEETS
HAWAII	HAWAII	I-H1-1(64):12 Unit 1 I-H1-1(16):11	1969	100	158

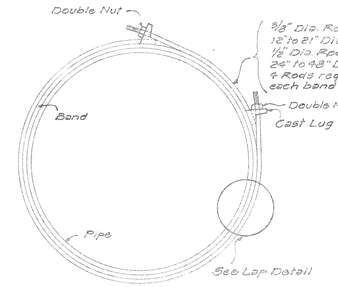

END VIEW

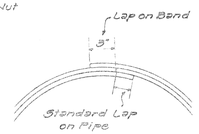

LAP DETAIL

NOTE:
Each watertight band coupler to be supplied with neoprene sponge rubber gasket.

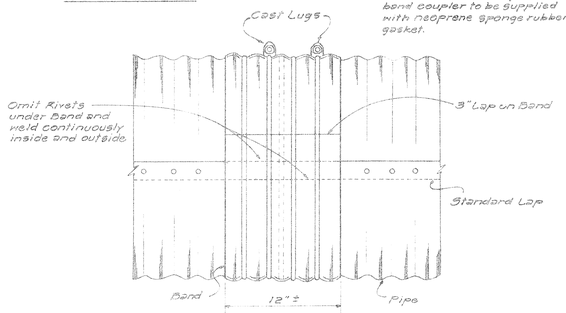

SIDE VIEW

DETAIL OF WATERTIGHT BAND COUPLER
NOT TO SCALE

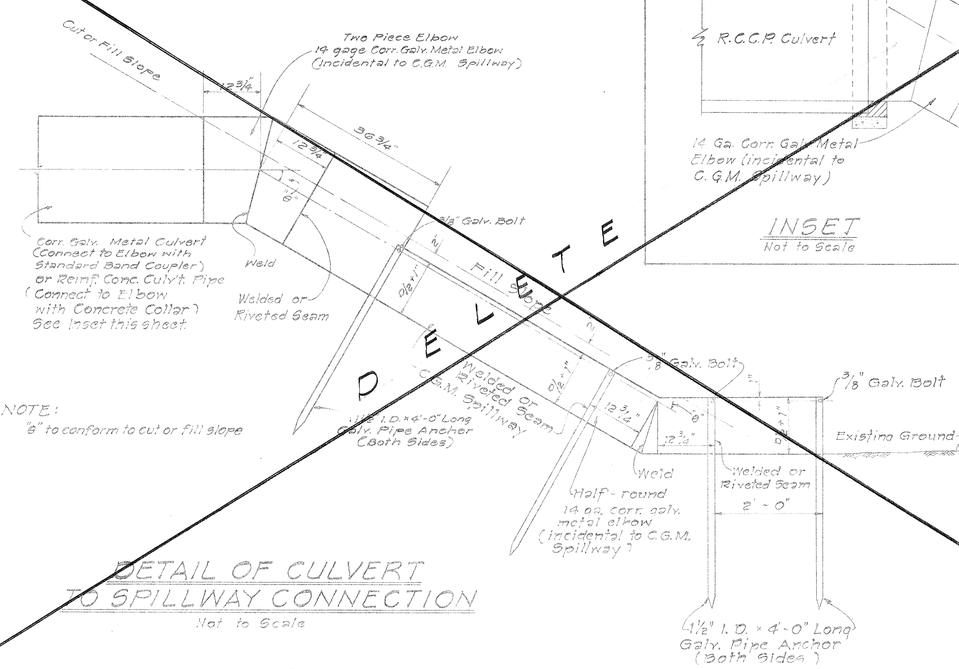

NOTE:
"B" to conform to cut or fill slope

DETAIL OF CULVERT TO SPILLWAY CONNECTION
Not to Scale

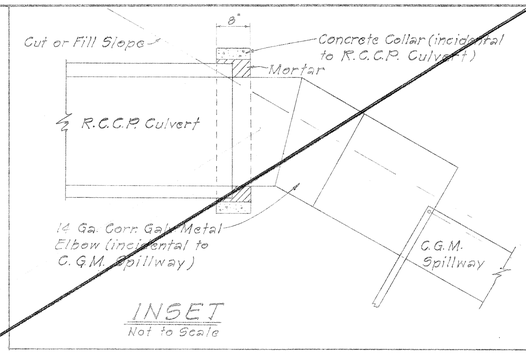

INSET
Not to Scale

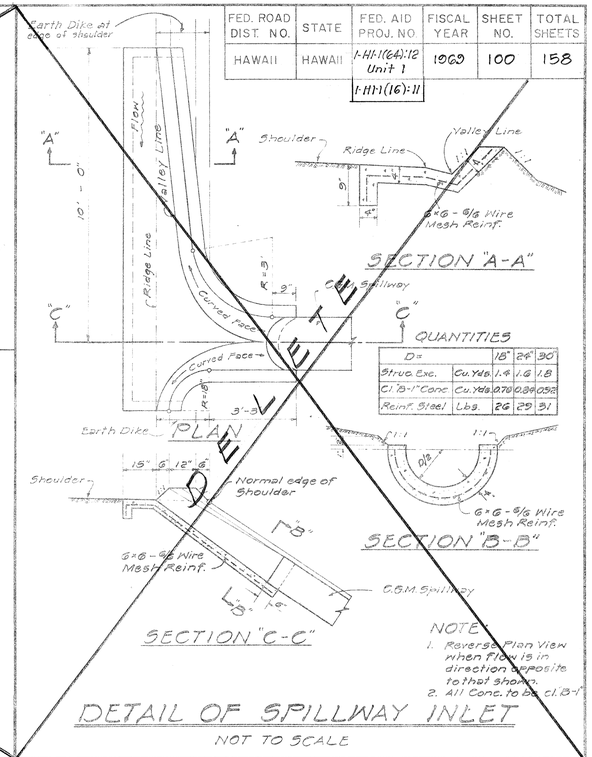

QUANTITIES

D =		18"	24"	30"
Struc. Exc.	Cu. Yds.	1.4	1.6	1.8
Cl. B-1" Conc.	Cu. Yds.	0.70	0.84	0.98
Reinf. Steel	Lbs.	26	29	31

NOTES:
1. Reverse Plan View when Flow is in direction opposite to that shown.
2. All Conc. to be cl. B-1"

DETAIL OF SPILLWAY INLET
NOT TO SCALE

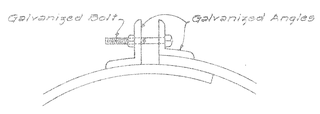

BAND DETAIL

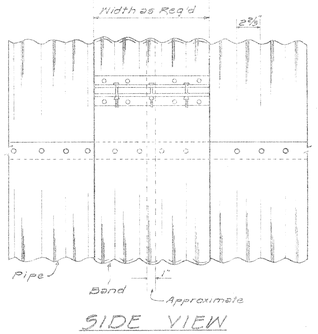

SIDE VIEW

DETAIL OF STANDARD BAND COUPLER
NOT TO SCALE

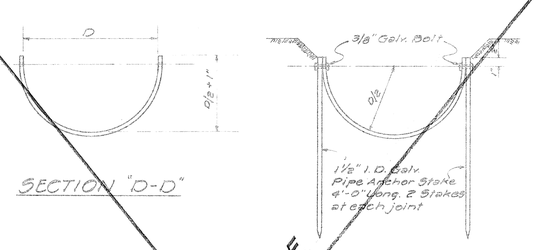

SECTION "D-D"

END VIEW

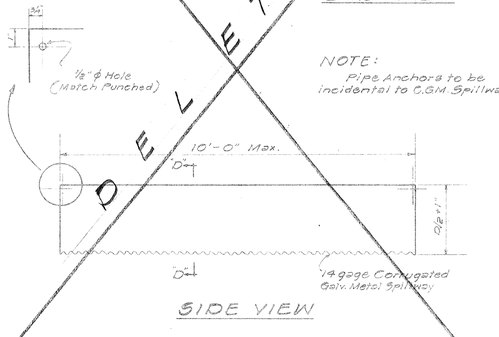

NOTE:
Pipe Anchors to be incidental to C.G.M. Spillway

SIDE VIEW

C.G.M. SPILLWAY
NOT TO SCALE

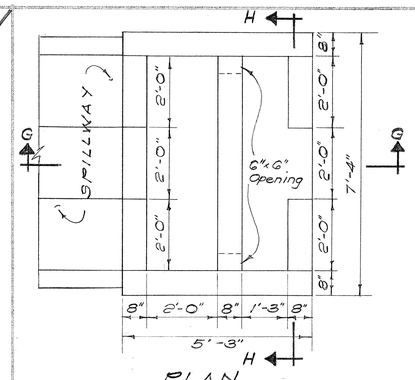

PLAN

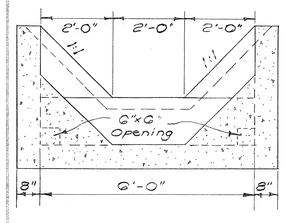

SECTION "H-H"

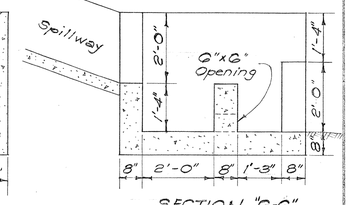

SECTION "G-G"

DETAILS OF CONC. DROP BOX AT OUTLET OF SPILLWAY

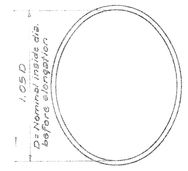

SPECIAL ELLIPTICAL FACTORY SHAPE (WITHOUT STRUTS)

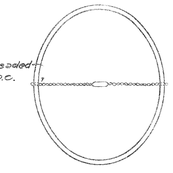

ELONGATED AND WIRE STRUTTED

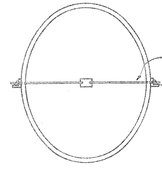

ELONGATED WITH ROD AND TURNBUCKLE

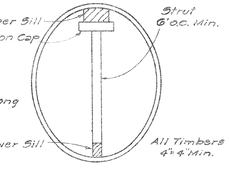

ELONGATED WITH TIMBER STRUT

METHOD OF ELONGATING AND STRUTTING CORRUGATED PIPE
NOT TO SCALE

ORIGINAL PLAN	SURVEY PLOTTED BY		DATE
	DRAWN BY	R.	5-24-66
	TRACED BY		" " "
NOTE BOOK	DESIGNED BY	O. M.	5-24-66
	QUANTITIES BY		" " "
No.	CHECKED BY		" " "

APPROVED: DATE 8-14-69
DIRECTOR OF TRANSPORTATION

STATE OF HAWAII
DEPARTMENT OF TRANSPORTATION
HIGHWAYS DIVISION

TYPICAL DETAILS
CORRUGATED GALVANIZED METAL CULVERTS, SPILLWAYS, AND SPECIAL DETAILS

SCALES AS NOTED

SHEET No. 13 OF 20 SHEETS

100

FED. ROAD DIST. NO.	STATE	FED. AID PROJ. NO.	FISCAL YEAR	SHEET NO.	TOTAL SHEETS
HAWAII	HAW.	I-HI-1(64):12 Unit 1 / HHI-1(16):11	1969	101	158

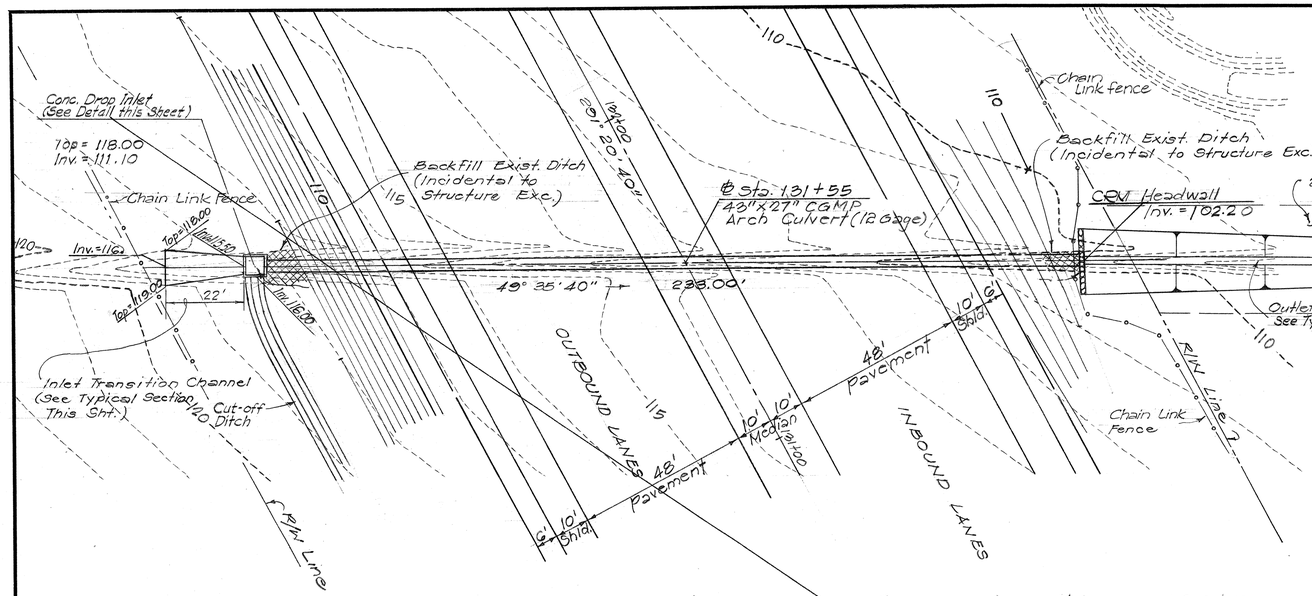

PLAN - 43"x27" CGMP ARCH CULVERT (12 GAGE) @ ℄ STA. 131+55

Scale: 1" = 20'

DELETED BY CCO #3

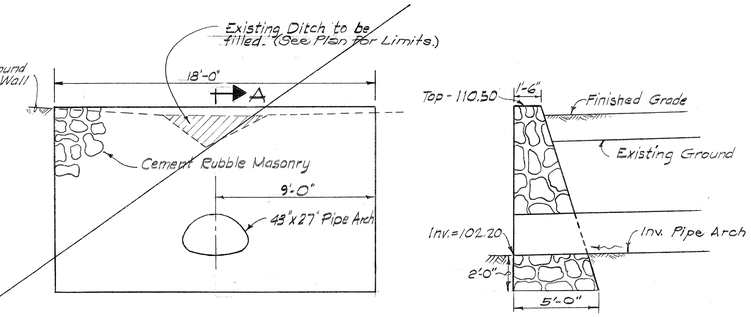

ELEVATION

Scale: 1/4" = 1'-0"

SECTION A-A

Scale: 1/4" = 1'-0"

DETAIL OF MASONRY HEADWALL

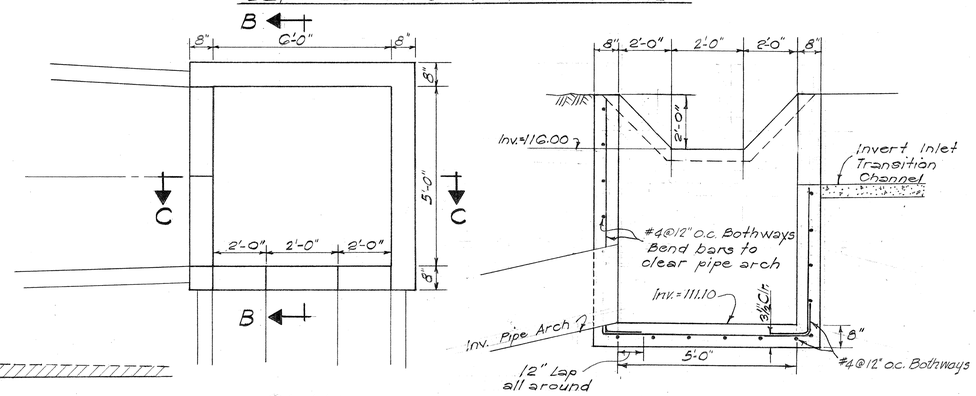

PLAN

CONC. DROP INLET

Not to Scale

SECTION C-C

Not to Scale

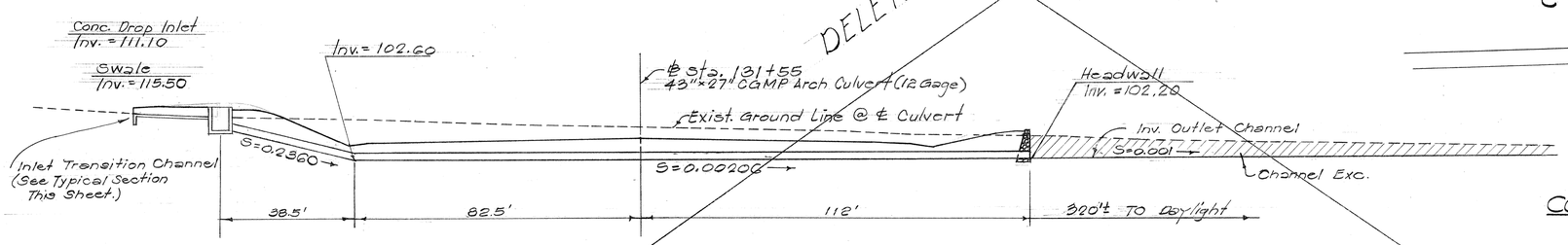

PROFILE - 43"x27" CGMP ARCH CULVERT (12 GAGE) @ ℄ STA. 131+55

Scale: 1" = 20'

SECTION B-B

Scale: 1/2" = 1'-0"

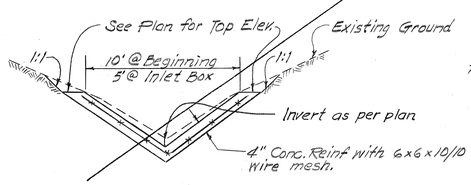

TYPICAL SECTION

INLET TRANSITION CHANNEL

Scale: 1/2" = 1'-0"

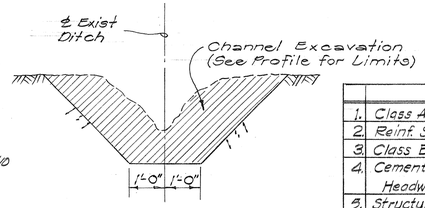

TYPICAL SECTION

OUTLET CHANNEL

Scale: 1/2" = 1'-0"

ESTIMATED QUANTITIES

	ITEM	QUANTITY	
1.	Class A-1 Conc.	4	cy.
2.	Reinf. Steel	300	lbs.
3.	Class B-1 Conc. for Channel	3	cy.
4.	Cement Rubble Masonry for Headwall.	82	cy.
5.	Structural Excavation	310	cy.
6.	Channel Excavation	182	cy.
7.	43" x 27" Pipe Arch (No Alternate)	230	lf.

PAUL M. HIROTA REGISTERED PROFESSIONAL ENGINEER No. 1429 HAWAII, U.S.A.

THIS WORK WAS PREPARED BY ME OR UNDER MY SUPERVISION.

STATE OF HAWAII
DEPARTMENT OF TRANSPORTATION
HIGHWAYS DIVISION

43"x27" CORRUGATED GALVANIZED METAL PIPE ARCH CULVERT @ ℄ STA. 131+55

INTERSTATE ROUTE H-1
PROJ. NO. I-HI-1(64):12
UNIT 1

Scale: As Shown Date: 8/19/68

SHEET No. 14 OF 20 SHEETS

ORIGINAL PLAN		
	SURVEY PLOTTED BY	DATE
	TRACED BY	" "
	DESIGNED BY	" "
	NOTE BOOK	QUANTITIES BY
		CHECKED BY
	No.	

PRINTED ON NO. 1000H CLEARPRINT

101

FED. ROAD DIST. NO.	STATE	FED. AID PROJ. NO.	FISCAL YEAR	SHEET NO.	TOTAL SHEETS
HAWAII	HAW.	I-HI-I(64):12 Unit I I-HI-I(16):11	1969	102	158

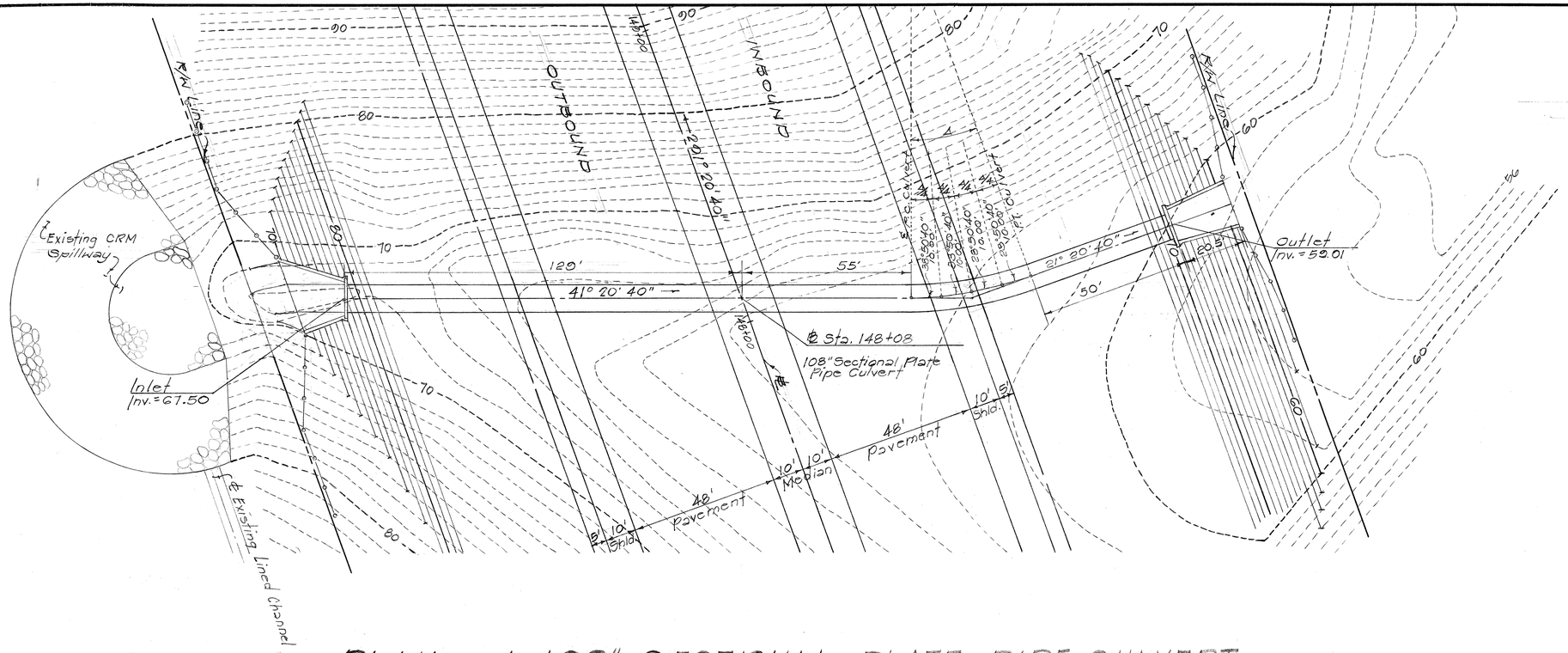

PLAN - 1-108" SECTIONAL PLATE PIPE CULVERT @ ℄ STA. 148+08

Scale: 1" = 20'

ESTIMATED QUANTITIES

ITEM	108" SECT. PLATE	
1. Class A-1 Concrete	47	C.Y.
2. Reinforced Steel	6500	lbs.
3. Structural Excavation	315	C.Y.
4. Untreated Base for Pipe Foundation	171	C.Y.
5. 108" Sectional Plate Culvert (5% Elongated)	274	L.F.

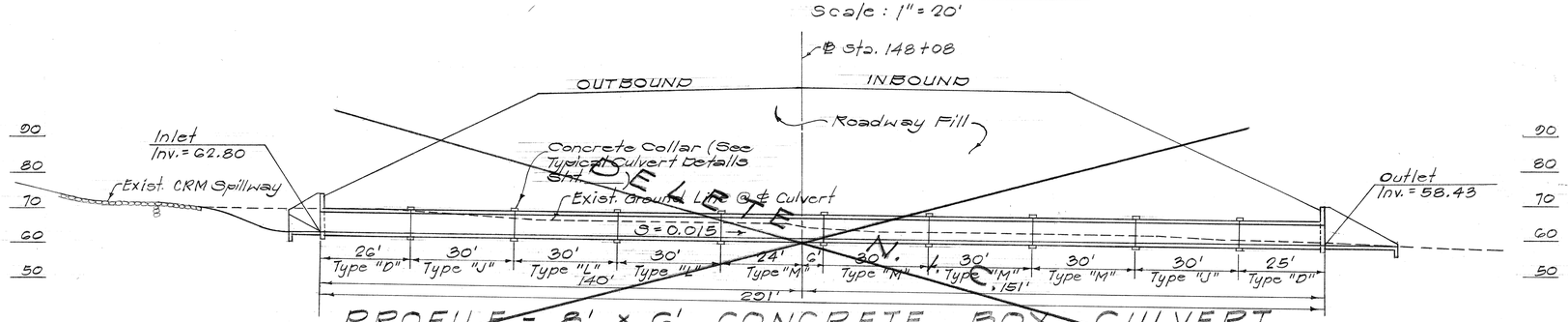

DELETED

PROFILE - 8' × 6' CONCRETE BOX CULVERT

Scale: 1" = 20'

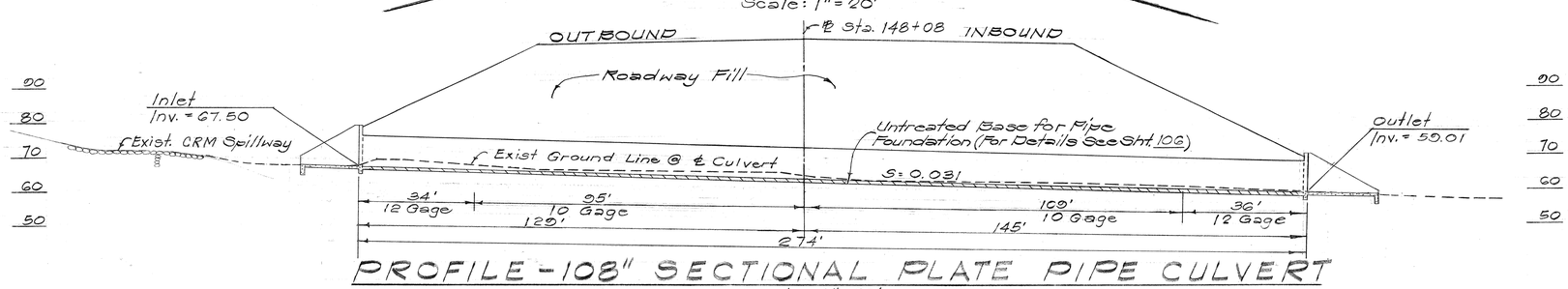

PROFILE - 108" SECTIONAL PLATE PIPE CULVERT

Scale: 1" = 20'

ORIGINAL PLAN		DATE
	SURVEY PLOTTED BY	
	DRAWN BY	
	TRACED BY	
NOTE BOOK	DESIGNED BY	
	QUANTITIES BY	
No.	CHECKED BY	

PAUL M. HIROTA REGISTERED PROFESSIONAL ENGINEER No. 1249 HAWAII, U.S.A.

THIS WORK WAS PREPARED BY ME OR UNDER MY SUPERVISION.

STATE OF HAWAII
DEPARTMENT OF TRANSPORTATION
HIGHWAYS DIVISION

108" SECTIONAL PLATE PIPE CULVERT @ ℄ STA. 148+08

INTERSTATE ROUTE H-1
PROJ. NO. I-HI-I(64):12, UNIT I

Scale: As Shown Date: 8/19/68

SHEET No. 15 OF 20 SHEETS

102

PRINTED ON NO. 1000H CLEARPRINT

FED. ROAD DIST. NO.	STATE	FED. AID PROJ. NO.	FISCAL YEAR	SHEET NO.	TOTAL SHEETS
HAWAII	HAW.	I-HI-1(64)12 Unit 1	1969	103	158
		I-HI-1(16):11			

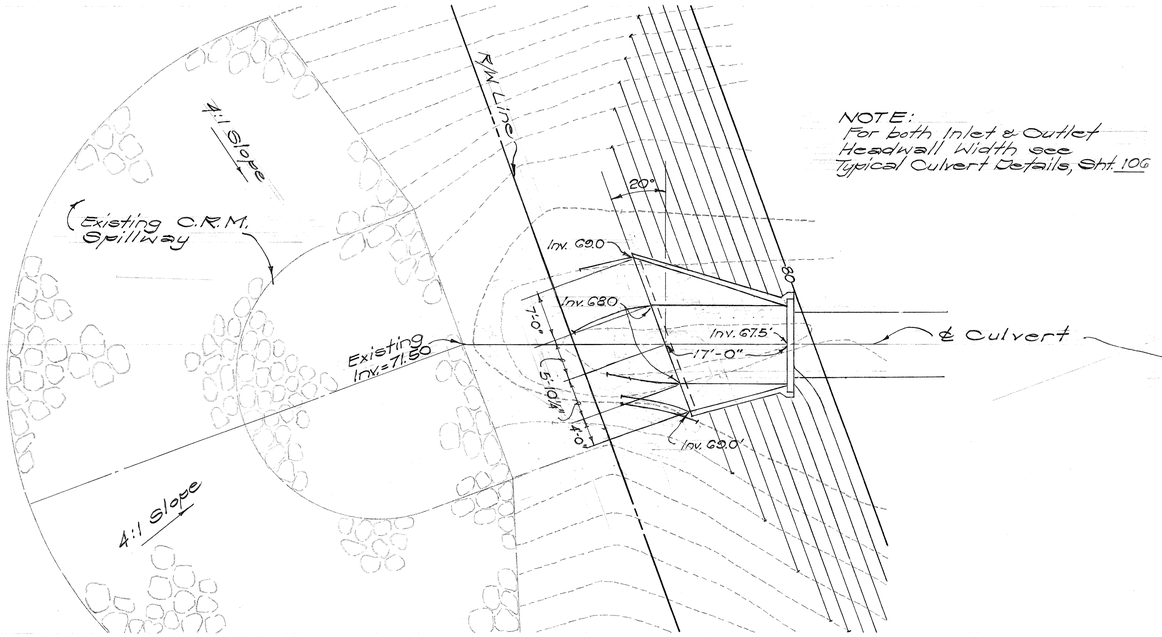

NOTE:
For both Inlet & Outlet Headwall Width see Typical Culvert Details, Sht. 106

PLAN - INLET
Scale: 1" = 10'-0"

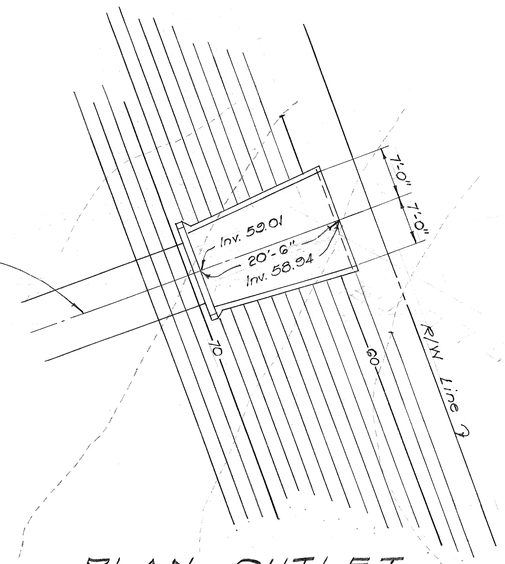

PLAN - OUTLET
Scale: 1" = 10'-0"

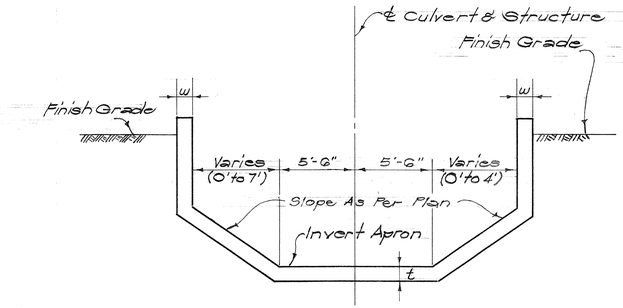

SECTION "A-A"
Not to Scale

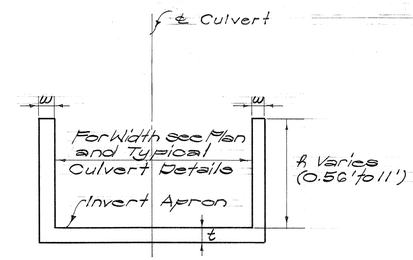

SECTION "B-B"
Scale: 1/4" = 1'-0"

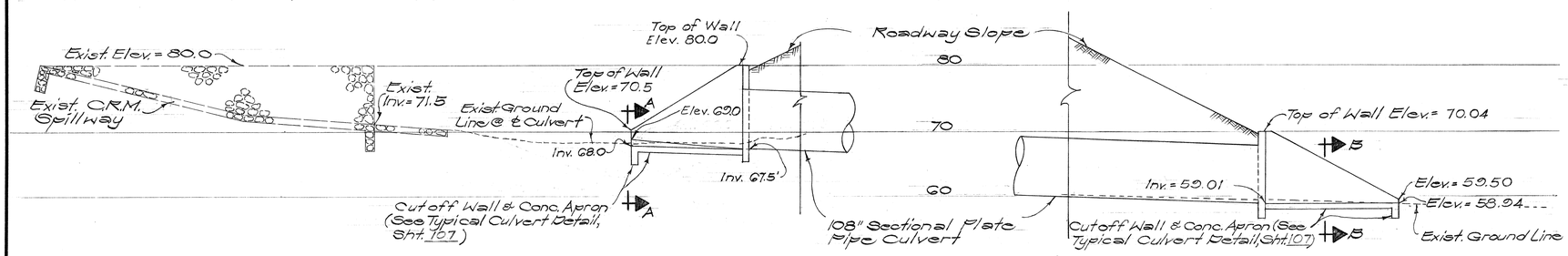

ELEVATION - INLET
Scale: 1" = 10'-0"

ELEVATION - OUTLET
Scale: 1" = 10'-0"

108" SECTIONAL PLATE PIPE CULVERT AT ℄ STA. 148+08

REFERENCE NOTES:
1. Refer to Typical Culvert Detail Drawings sheets 106 & 107 for additional details.

PAUL M. HIROTA REGISTERED PROFESSIONAL ENGINEER No. 5146 HAWAII, U.S.A.

THIS WORK WAS PREPARED BY ME OR UNDER MY SUPERVISION.

STATE OF HAWAII
DEPARTMENT OF TRANSPORTATION
HIGHWAYS DIVISION

108" SECTIONAL PLATE PIPE CULVERT @ ℄ STA. 148+08

INTERSTATE ROUTE H-1
PROJ. NO. I-HI-1(64):12, UNIT 1

Scale: As Shown Date: 8/19/68

SHEET No. 16 OF 20 SHEETS

ORIGINAL PLAN		DATE
	SURVEY PLOTTED BY	
	DRAWN BY	" "
	TRACED BY	" "
NOTE BOOK	DESIGNED BY	" "
	QUANTITIES BY	" "
No.	CHECKED BY	" "

PRINTED ON NO. 1000H CLEARPRINT

FED. ROAD DIST. NO.	STATE	FED. AID PROJ. NO.	FISCAL YEAR	SHEET NO.	TOTAL SHEETS
HAWAII	HAW.	I-H1-1(64):12, Unit 1	1969	104	158
		I-H1-1(16):11			

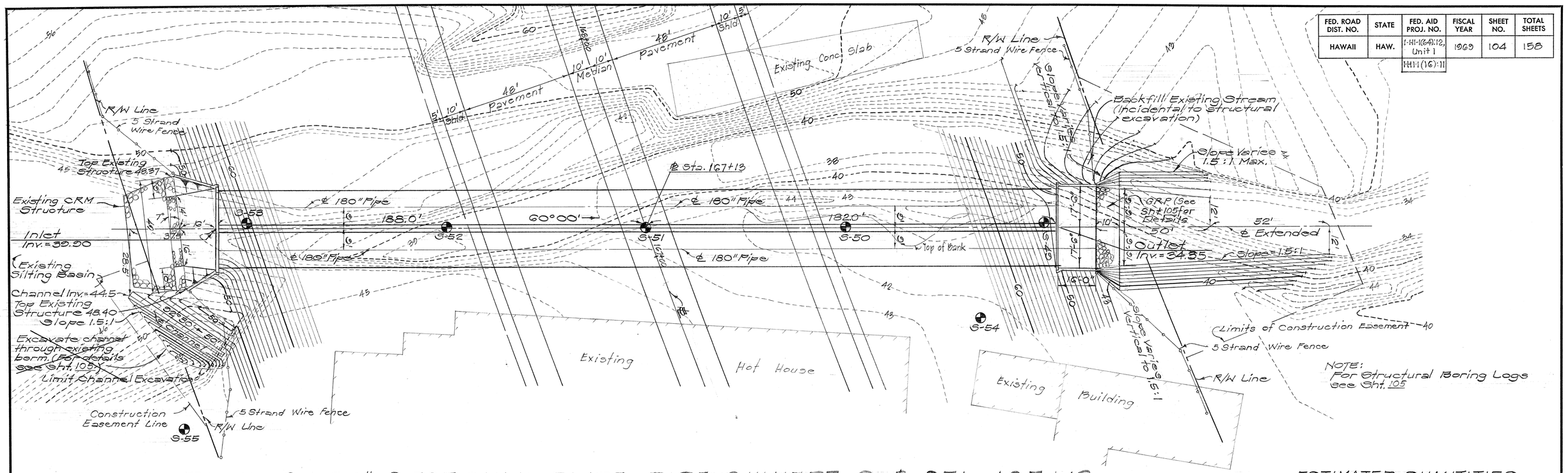

PLAN - 2 - 180" SECTIONAL PLATE PIPE CULVERT @ ℄ STA. 167+13

Scale: 1" = 20'

ESTIMATED QUANTITIES

1.	180" Sectional Plate Pipe (5% Elongated)	740 L.F.
2.	Class "A-1" Conc.	130 c.y.
3.	Reinforcing Steel	17,950 lbs.
4.	Structural Excavation	3,400 c.y.
5.	Channel Excavation	840 c.y.
6.	Untreated Base for Pipe Foundation	727 c.y.
7.	Grouted Rubble Paving	21 c.y.
8.	Course Rock	487 c.y.

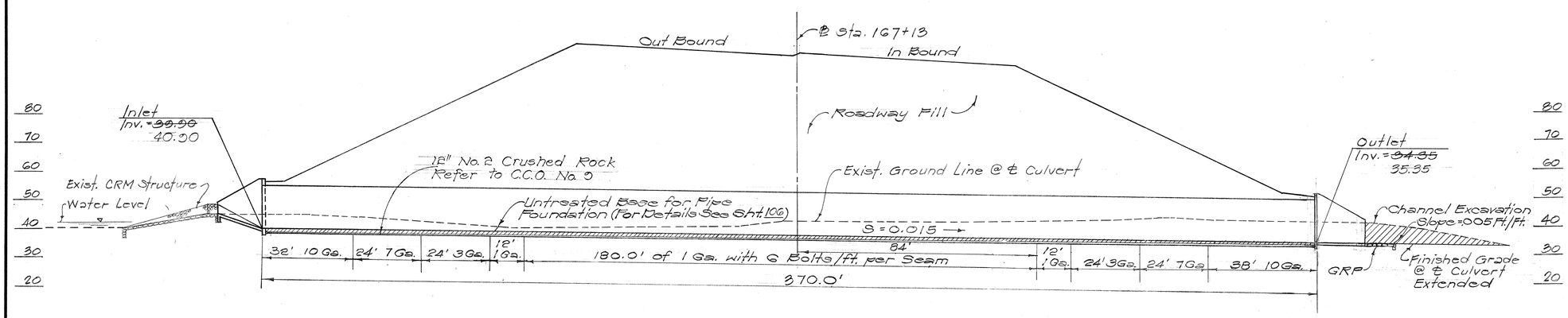

PROFILE - 2 - 180" SECTIONAL PLATE PIPE CULVERT @ ℄ STA. 167+13

Scale: 1" = 20'

ORIGINAL PLAN	SURVEY PLOTTED BY
	DRAWN BY
	TRACED BY
NOTE BOOK	DESIGNED BY
	QUANTITIES BY
No.	CHECKED BY
	DATE

PAUL M. HIROTA REGISTERED PROFESSIONAL ENGINEER No. 1449 HAWAII, U.S.A.

THIS WORK WAS PREPARED BY ME OR UNDER MY SUPERVISION.

STATE OF HAWAII
DEPARTMENT OF TRANSPORTATION
HIGHWAYS DIVISION

TWO-180" SECTIONAL PLATE PIPE CULVERT - ℄ STA. 167+13

INTERSTATE ROUTE H-1
PROJ. NO. I-H1-1(64):12, UNIT 1

Scale: As Shown Date: 8/19/68

SHEET No. 17 OF 20 SHEETS

104

PRINTED ON NO. 1000H CLEARPRINT

FED. ROAD DIST. NO.	STATE	FED. AID PROJ. NO.	FISCAL YEAR	SHEET NO.	TOTAL SHEETS
HAWAII	HAW.	I-H1-1(64):12 Unit 1 I-H1-1(16):11	1969	105	158

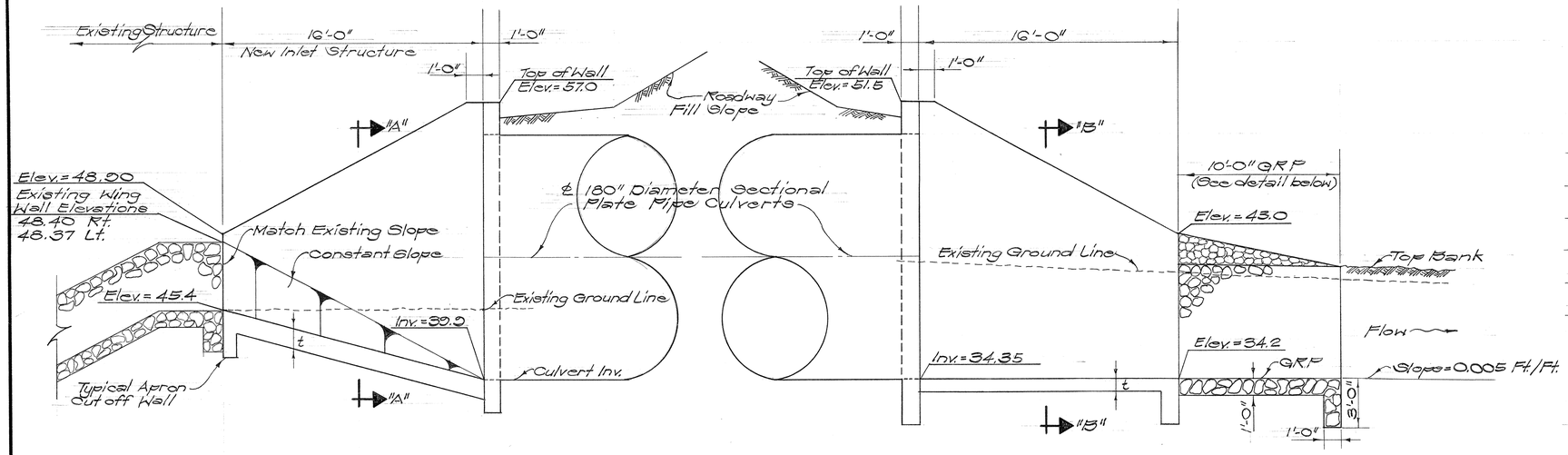

INLET ELEVATION @ ℄ STA. 167+13

Scale: 1/4"=1'-0"

OUTLET ELEVATION @ ℄ STA. 167+13

Scale: 1/4"=1'-0"

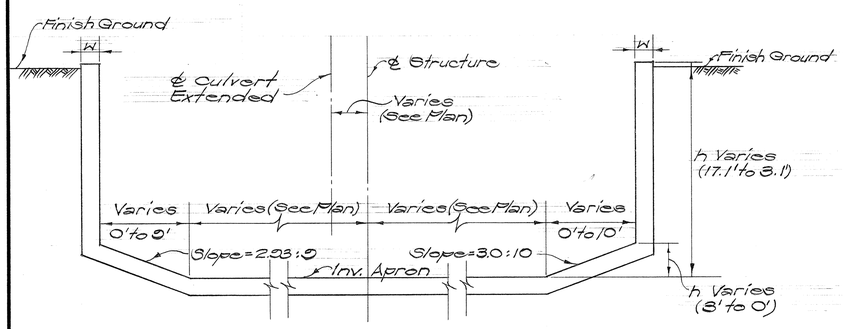

SECTION "A-A"

Scale: 1/4"=1'-0"

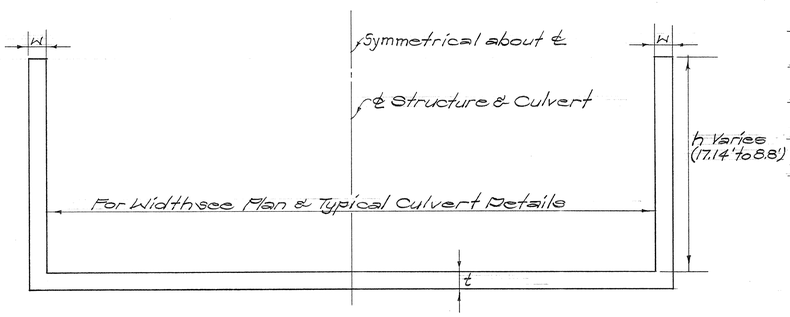

SECTION "B-B"

Scale: 1/4"=1'-0"

REFERENCE NOTE:

Refer to Typical Culvert Details sheets 106 & 107 for reinforcing & additional details for headwalls, aprons & wingwalls.

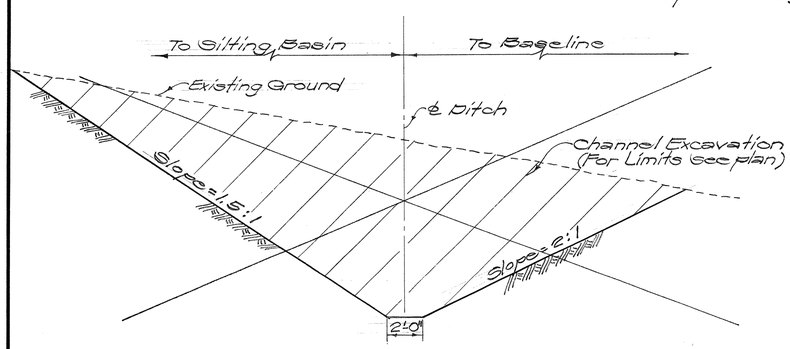

TYPICAL SECTION-CHANNEL THROUGH EXIST. BERM

Scale: 1/4"=1'-0"

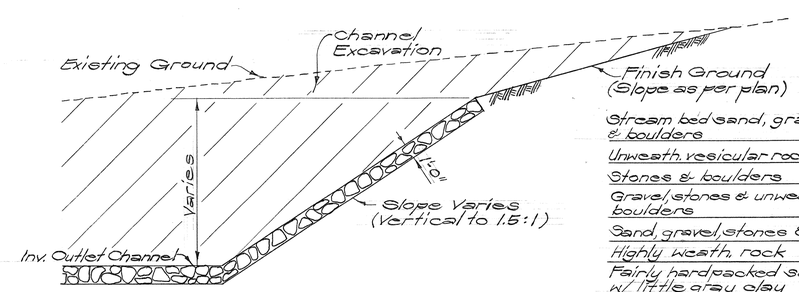

DETAIL G.R.P. LINING

Scale: 1/4"=1'-0"

BORING S-49

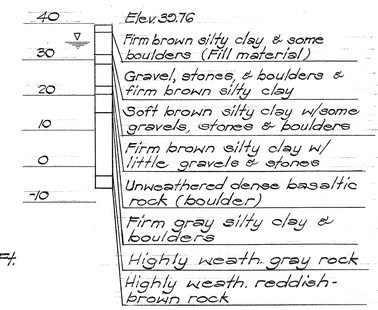

BORING S-50

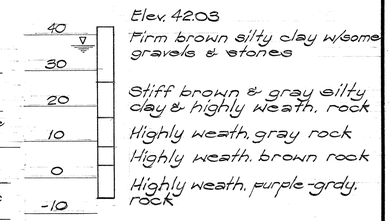

BORING S-54

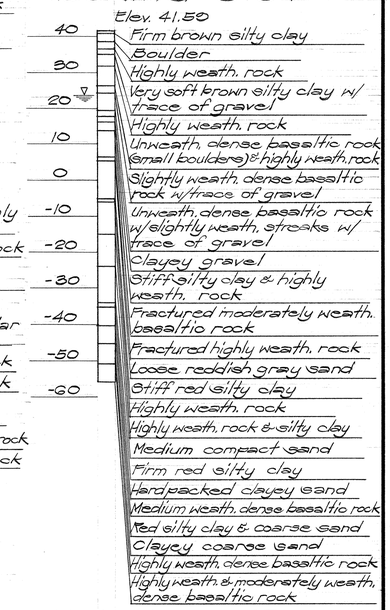

BORING S-51

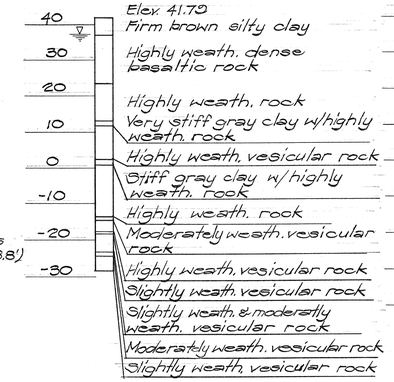

BORING S-52

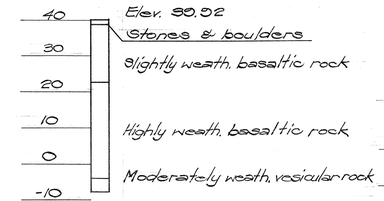

BORING S-55

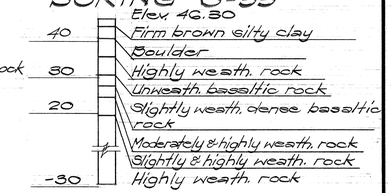

BORING S-53

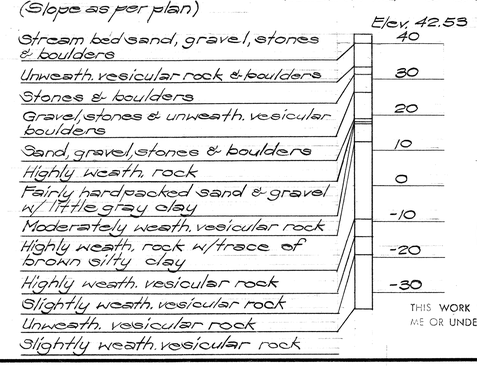

PAUL M. HIROTA REGISTERED PROFESSIONAL ENGINEER No. 1249 HAWAII, U.S.A.

THIS WORK WAS PREPARED BY ME OR UNDER MY SUPERVISION.

STATE OF HAWAII
DEPARTMENT OF TRANSPORTATION
HIGHWAYS DIVISION

TWO-180" SECTIONAL PLATE PIPE CULVERT-℄ STA. 167+13
BORING LOGS

INTERSTATE ROUTE H-1
PROJ. NO. I-H1-1(64):12, UNIT 1

Scale: As Shown Date: 8/19/68

SHEET No. 18 OF 20 SHEETS

ORIGINAL PLAN	SURVEY PLOTTED BY	DATE
	DRAWN BY	"
	TRACED BY	"
NOTE BOOK	DESIGNED BY	"
	QUANTITIES BY	"
No.	CHECKED BY	"

PRINTED ON NO. 1000H CLEARPRINT

105

FED. ROAD DIST. NO.	STATE	FED. AID PROJ. NO.	FISCAL YEAR	SHEET NO.	TOTAL SHEETS
HAWAII	HAW.	I-HI-1(64):12 Unit 1	1969	106	158

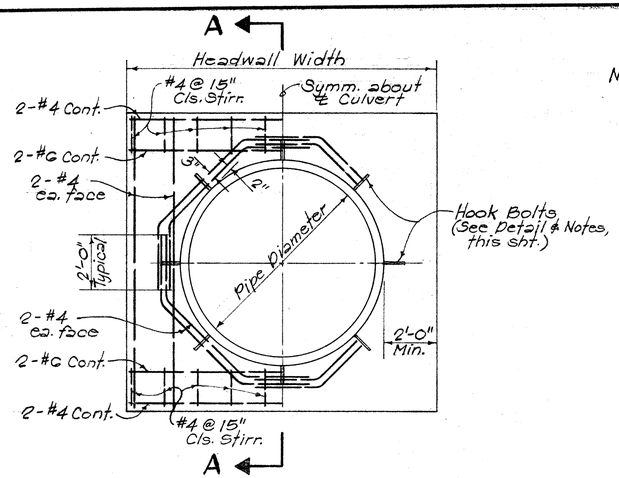

FRONT ELEVATION - SINGLE BARREL

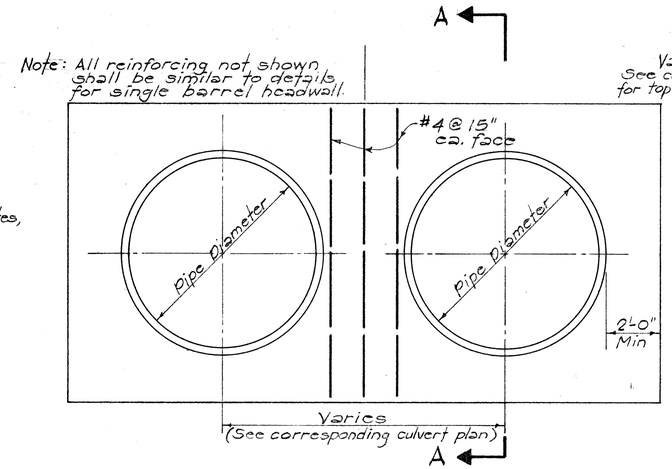

FRONT ELEVATION - MULTIPLE BARREL

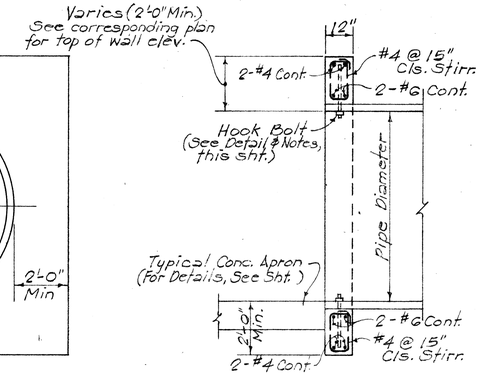

SECTION "A-A"

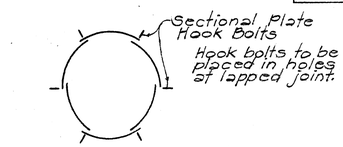

Note: Hook bolts shall be used only with Sectional Plate Pipe Culverts.

LOCATION OF HOOK BOLTS AT HEADWALL

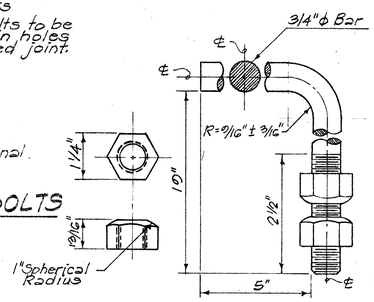

HOOK BOLT DETAIL

Not to Scale

NOTE:
Hook Bolt material shall meet the current ASTM A-307. Thread shall be American Standard Coarse Thread Series, Class 2, Free Fit. Bolts shall be galvanized to meet current ASTM Specification A-153. The galvanizing on thread portion shall not prevent turning the nut by hand.
Nuts shall be carbon steel hot dip galvanized to meet ASTM Specification A-153. Nut threads shall be American Standard Coarse Thread Series (1/64 maximum oversize), cleaned after galvanizing to provide a free running fit on the Class 2 bolt. Nuts shall be 1 1/4" across flats, 13/16" thick, curve crowned to approximately 1" radius.

TYPICAL PIPE CULVERT HEADWALL DETAILS

Scale: 3/8" = 1'-0"

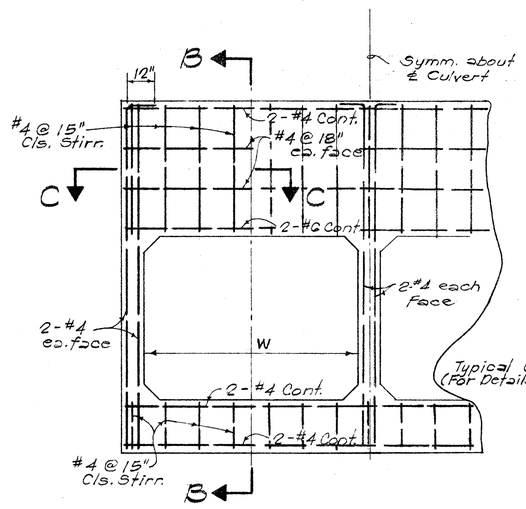

FRONT ELEVATION

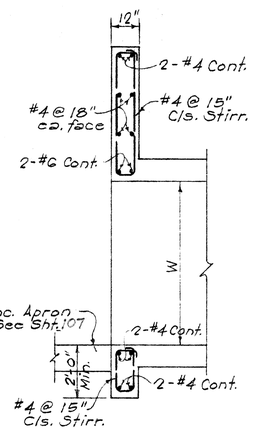

SECTION "B-B"

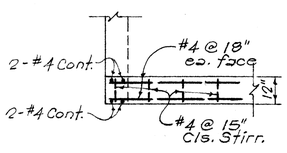

SECTION "C-C"

TYPICAL BOX CULVERT HEADWALL DETAILS

Scale: 3/8" = 1'-0"

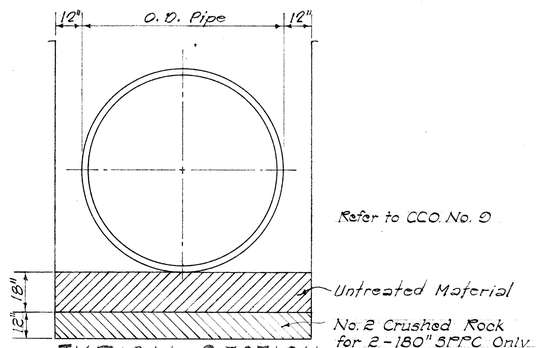

TYPICAL SECTION

UNTREATED BASE FOR PIPE FOUNDATION

Scale: 3/8" = 1'-0"

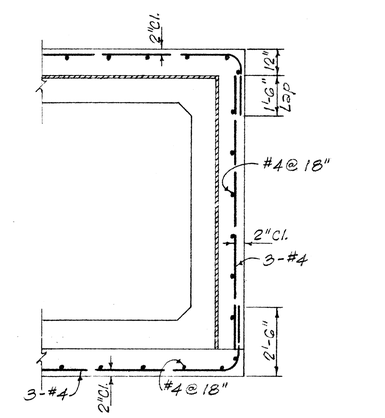

TYPICAL COLLAR DETAIL

Scale: 3/8" = 1'-0"

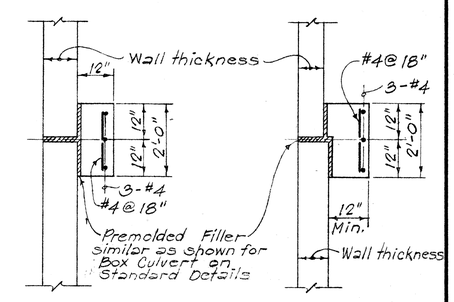

TYPICAL

AT VARYING WALL THICKNESS

TYPICAL SECTION

Scale: 1/2" = 1'-0"

ORIGINAL PLAN		DATE
	SURVEY PLOTTED BY	
	DRAWN BY	
	TRACED BY	
	DESIGNED BY	
NOTE BOOK	QUANTITIES BY	
No.	CHECKED BY	

RAUL M. HIROTA REGISTERED PROFESSIONAL ENGINEER No. 1449 HAWAII, U.S.A.

THIS WORK WAS PREPARED BY ME OR UNDER MY SUPERVISION.

STATE OF HAWAII
DEPARTMENT OF TRANSPORTATION
HIGHWAYS DIVISION

TYPICAL CULVERT DETAILS

INTERSTATE ROUTE H-1
PROJ. NO. I-HI-1(64):12, UNIT 1

Scale: 1" = 50' Date: 8/19/68

SHEET No. 19 OF 20 SHEETS

PRINTED ON NO. 1000H CLEARPRINT

106

FED. ROAD DIST. NO.	STATE	FED. AID PROJ. NO.	FISCAL YEAR	SHEET NO.	TOTAL SHEETS
HAWAII	HAW.	I-HI-1(64):12 Unit 1 I-HI-1(16)-11	1969	107	158

Reinf. Bar Notes:

1. Bar spacing, except for "h" bars, in the steel schedule below, shall be measured parallel to the wingwall which has the largest angular divergence from the headwall.
2. All transverse reinforcing shall be placed parallel to the headwall.

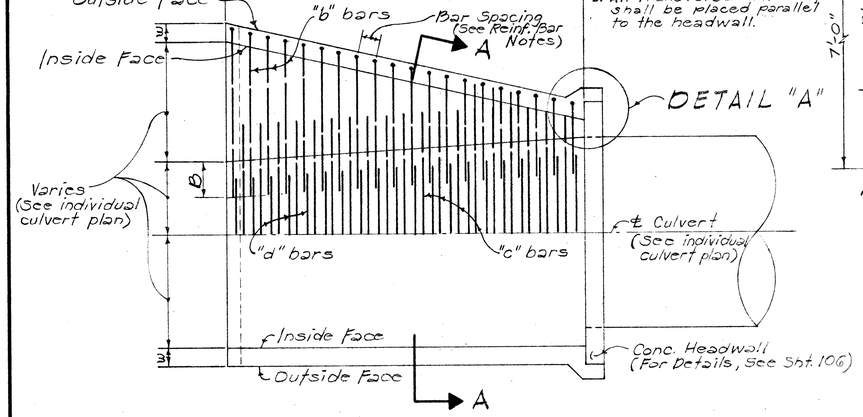

PLAN - TYPICAL CONCRETE APRON

Scale: 1/4" = 1'-0"

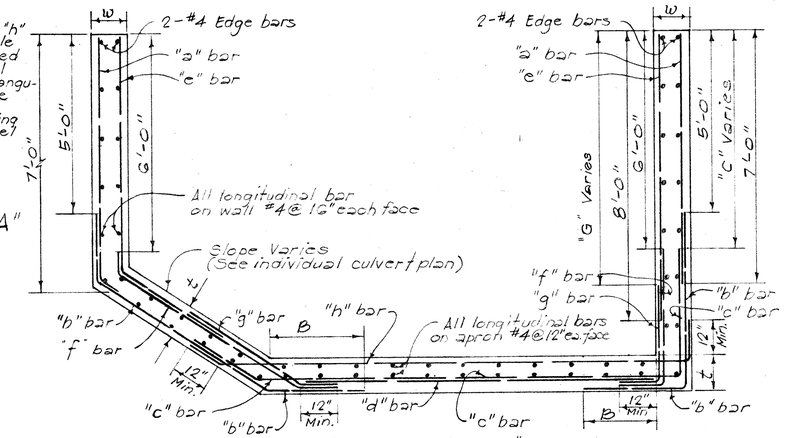

SECTION "A-A"

TYPICAL REINFORCING

Scale: 1/2" = 1'-0"

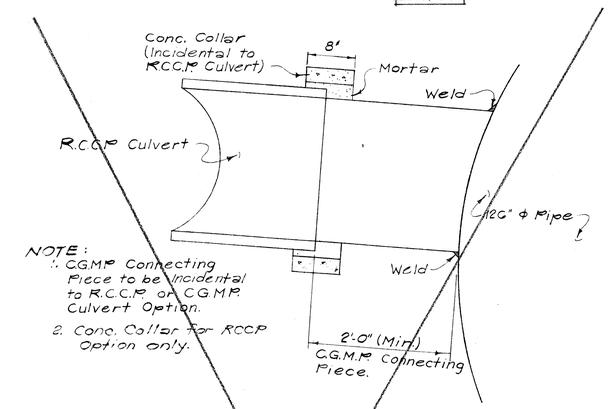

NOTE:
1. C.G.M.P. Connecting Piece to be incidental to R.C.C.P. or C.G.M.P. Culvert Option.
2. Conc. Collar for RCCP Option only.

TYPICAL DETAIL OF RCCP OR CGMP CULVERT CONNECTION TO 120" ϕ SECTIONAL PLATE PIPE

Scale: 1" = 1'-0"

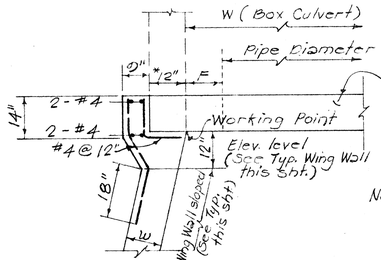

Note: For reinforcing not shown see wing wall details and schedule, this sht.

* Dimension when no Box Culvert occurs.

DETAIL "A"

TYPICAL HEADWALL-WING WALL CONNECTION

Scale: 1/2" = 1'-0"

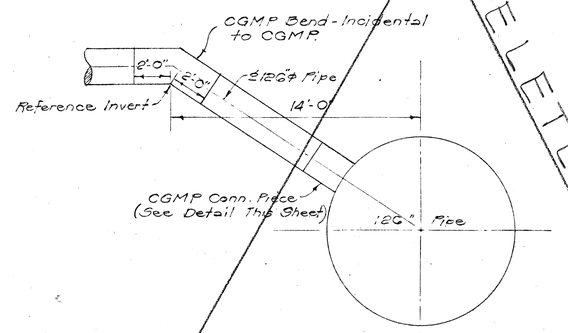

DETAIL NO. 1

Scale: 1/4" = 1'-0"

NOTE:
When height of wing wall diminishes to less than 2'-0" eliminate "a" and "e" bars and Extend "b and "f" bars to top of wing wall.

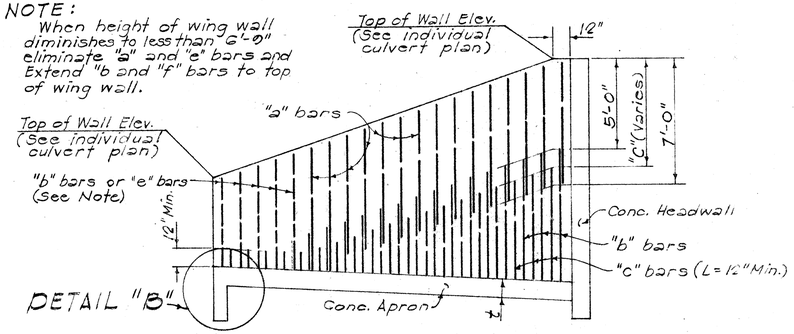

TYPICAL SECTION WING WALL WITH OUTSIDE FACE REINFORCING

Scale: 1/4" = 1'-0"

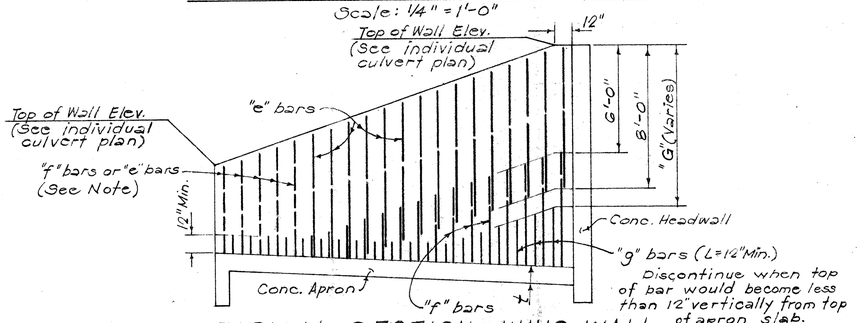

TYPICAL SECTION WING WALL WITH INSIDE FACE REINFORCING

Scale: 1/4" = 1'-0"

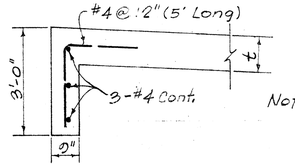

Note: For reinforcing not shown see conc. apron detail and schedule, this sht.

DETAIL "B"

TYPICAL APRON CUT OFF WALL

Scale: 1/2" = 1'-0"

STEEL SCHEDULE

Item	Pipe Culvert @ Sta. 183+09.7	Pipe Culvert @ Sta. 167+13		Pipe Culvert @ Sta. 148+08	
	Outlet	Inlet	Outlet	Inlet	Outlet
w	12"	12"	14"	0"	0"
t	14"	15"	16"	10"	10"
"a" bar	#4 @ 12"	#4 @ 12"	#4 @ 12"	#4 @ 12"	#4 @ 12"
"b" bar	#7 @ 12"	#7 @ 12"	#7 @ 12"	#5 @ 12"	#5 @ 12"
"c" bar	#7 @ 12"	#7 @ 12"	#7 @ 12"	#6 @ 12"	#6 @ 12"
"d" bar	#5 @ 12"				
"e" bar	#4 @ 12"	#4 @ 12"	#4 @ 12"	#4 @ 12"	#4 @ 12"
"f" bar	#6 @ 12"	#5 @ 12"	#6 @ 12"	#5 @ 12"	#5 @ 12"
"g" bar	#7 @ 12"	#6 @ 12"	#7 @ 12"		
"h" bar	#7 @ 6"	#7 @ 6"	#8 @ 6"	#5 @ 6"	#6 @ 12"
"B"	2'-0"	3'-6"	5'-0"	3'-6"	3'-6"
"C"	0'-0"	0'-0"	10'-0"	6'-0"	6'-0"
"G"	0'-0"	8'-0"	0'-0"		
"F"	1'-0"	1'-0"	1'-0"	1'-0"	1'-0"

TYPICAL END STRUCTURE DETAILS

PAUL M. HIROTA — REGISTERED PROFESSIONAL ENGINEER No. 1429 — HAWAII, U.S.A.

THIS WORK WAS PREPARED BY ME OR UNDER MY SUPERVISION.

STATE OF HAWAII
DEPARTMENT OF TRANSPORTATION
HIGHWAYS DIVISION

TYPICAL CULVERT DETAILS

INTERSTATE ROUTE H-1
PROJ. NO. I-HI-1(64):12, UNIT 1

Scale: 1" = 50' Date: 8/19/'68

SHEET No. 20 OF 20 SHEETS

ORIGINAL PLAN	SURVEY PLOTTED BY	DATE
	DRAWN BY	
	TRACED BY	
NOTE BOOK	DESIGNED BY	
	QUANTITIES BY	
No.	CHECKED BY	

PRINTED ON NO. 1000H CLEARPRINT

107