FED. ROAD DIST. NO.	STATE	FED. AID PROJ. NO.	FISCAL YEAR	SHEET NO.	TOTAL SHEETS
HAWAII	HAW.	I-HI-1(63):11 I-HI-1(16):11	1968	18	28

GENERAL WATER NOTES

1. The Contractor shall notify the Board of Water Supply in writing one week prior to commencing work on the water system.
2. The Contractor shall arrange with the Board of Water Supply to cut-off existing unused service laterals, remove meter boxes and appurtenances, prior to commencement of clearing and grading operations, Contractor shall provide all necessary excavation.
3. Asterisk (*) indicates work to be performed by B.W.S. Materials to be furnished by the Contractor unless specified as "relocate."
4. All excavation and backfill shall be done by the Contractor, including excavation for the relocation and lowering of existing mains and excavation for meter to house service connections.
5. The locations of existing mains and appurtenances shown on the plans are approximate only and the Contractor shall verify the exact locations. Any adjustment to the water mains and appurtenances whether shown on the construction plans or not shall be made a part of the project.
6. The Contractor shall plug the ends of abandoned water mains with class "C-1" concrete. Payment for the class "C-1" concrete used as plugs shall be considered incidental to the various contract items for the water system.
7. Concrete in reaction and test blocks shall be class "B-1."
8. H.E.Co. and H.T.Co. utility poles, handholes, manholes, ductlines and sewer mains and appurtenances to have minimum of three (3) feet clearance from water mains and other water system appurtenances. Ductlines and sewer lines crossing water mains to have minimum 6" vertical clearances.
9. Any excavation work around existing water main shall be by hand only.
10. Temporary cleanouts shall be installed by the Contractor wherever necessary and the cost thereof shall be incidental to pipeline work.
11. Items indicated as "relocate" on the plans shall be removed, cleaned, painted and reinstalled at the new location by the Contractor unless otherwise specified.
12. Prior to final inspection, all fire hydrants shall be cleaned of all oil, grease, dirt or other loose materials and given one coat of an approved red lead and one coat of an approved aluminum hydrant paint.
13. ~~Prior to final inspection, all fire hydrants shall be cleaned of all oil, grease, dirt or other loose materials and given one coat of an approved red lead and one coat of an approved aluminum hydrant paint.~~
19. All gate valves, fire hydrants and other appurtenances specified as "salvage" on the plans shall be removed, cleaned, and returned to B.W.S. Manana Store Yard, by the Contractor.
14. In fill areas where the cover (from the existing ground) over the new main is less than three (3) feet, the Contractor shall first fill and compact the area (to provide a minimum of three (3) feet cover) prior to trenching for the new main.

GENERAL SEWER NOTES

1. The Engineer reserves the right to request the use of reinforced concrete cradle and jacket and or piling in the event that field conditions make such structural requirements necessary.
2. The Contractor shall notify the Division of Sewers two days prior to commencement of sewer work.
3. Top of sewer manholes in easements shall be four (4) inches above ground unless otherwise directed by the Engineer.
4. Existing laterals shown are from best sources available. The Contractor shall verify the exact locations as required. Any other existing laterals exposed during construction shall be extended and reconnected to new mains if services are required or cut and plugged.
5. All frames and covers on existing sewer manholes to be demolished shall be cleaned and reused on new sewer manholes.

GENERAL ELECTRIC & TELEPHONE NOTES

1. Existing electric and telephone systems shown on these plans are located from the best sources available. The Contractor shall check and verify the exact location and depth of same.
2. Contractor to stake out proposed ductlines, pole and anchor locations; H.E.Co. to check locations before Contractor undertakes excavations.
3. Minimum depth of ductlines from finish grade to top of concrete jacket where ducts are concrete encased = 2'-0" unless otherwise shown.
4. Ducts encased in concrete jackets:
   a. Normal distance from face of jacket to all ducts to be 3" minimum.
   b. Clear distance of 1½" minimum between ducts of same utility company.
   c. Clear distances of 3" minimum between H.E.Co. ducts and H.T.Co. ducts.
5. All ducts and conduits called for installation in concrete jacket shall be inspected and approved by the respective Engineer of H.E.Co. or H.T.Co. or their representative before concrete placing. 24 hr. (min.) notice shall be given before placing concrete.
6. Depth of all pullboxes, service boxes and H.E.Co. handholes and manholes to be determined in the field.
7. Poles and anchors for H.E.Co. unless otherwise noted.
8. Depth of poles and anchor holes are taken from finish grade.
9. For pole setting depth data, see sht. No. 20
10. Installation of, and backfill for poles by H.E.Co. unless otherwise noted.
11. Backfill of anchor holes by the Contractor under H.E.Co. supervision unless otherwise noted.
12. The Contractor shall notify the affected property owners, if any, at least one week in advance as to the time and duration the trenching and installation of underground electric and telephone service facilities are to be performed with their lots.

LEGEND

EXISTING	NEW	
S8	S8	Sewer Line
W8	W8	Water Line
E		Electric Duct Line
T		Telephone Duct Line
SMH	SMH	Sewer Manhole
WMH	WMH	Water Manhole
W.V.		Water Valve
W.M.		Water Meter
F.H.	F.H.	

EXISTING	NEW	
P.	P.	Electric or Telephone Pole
		Electric or Telephone Pole with Anchor
L.S.		Light Standard
H.E.	H.E.	Electric Handhole or Manhole
H.T.	H.T.	Telephone Handhole or Manhole
P.Pole		Electric or Telephone Pole to be removed
		Direct Buried Conduits (Elec. and/or Tel.)
		Cut and Plug Sewer or Water Line
A.I.P.		Cut, Plug & Abandone in Place Sewer or Water Line

APPROVED:

A P Henderson — 8-20-68
Hawaiian Electric Co., Inc. — Date

T A Judd — 8-20-68
Hawaiian Telephone Co. — Date

S. Kawakami — 7/26/68
Chief, Engineering Division B.W.S. — Date

[illegible] — 8-19-68
Sewer System Director, Division of Sewers — Date

PAUL M. HIROTA
REGISTERED PROFESSIONAL ENGINEER
No. 1449
HAWAII, U.S.A.

THIS WORK WAS PREPARED BY ME OR UNDER MY SUPERVISION.

STATE OF HAWAII
DEPARTMENT OF TRANSPORTATION
HIGHWAYS DIVISION

UTILITY GENERAL NOTES
SEWER, WATER,
ELECTRICAL AND TELEPHONE

INTERSTATE ROUTE H-1
PROJ. NOS. I-HI-1(63):11
I-HI-1(16):11

Date: 8/14/68

SHEET No. 1 OF 17 SHEETS

ORIGINAL PLAN — NOTE BOOK No. — SURVEY PLOTTED BY — DRAWN BY — TRACED BY — DESIGNED BY — QUANTITIES BY — CHECKED BY — DATE

PRINTED ON NO. 1000H CLEARPRINT

FED. ROAD DIST. NO.	STATE	FED. AID PROJ. NO.	FISCAL YEAR	SHEET NO.	TOTAL SHEETS
HAWAII	HAW.	I-HI-1(23):11 I-HI-1(16):11	1968	19	98

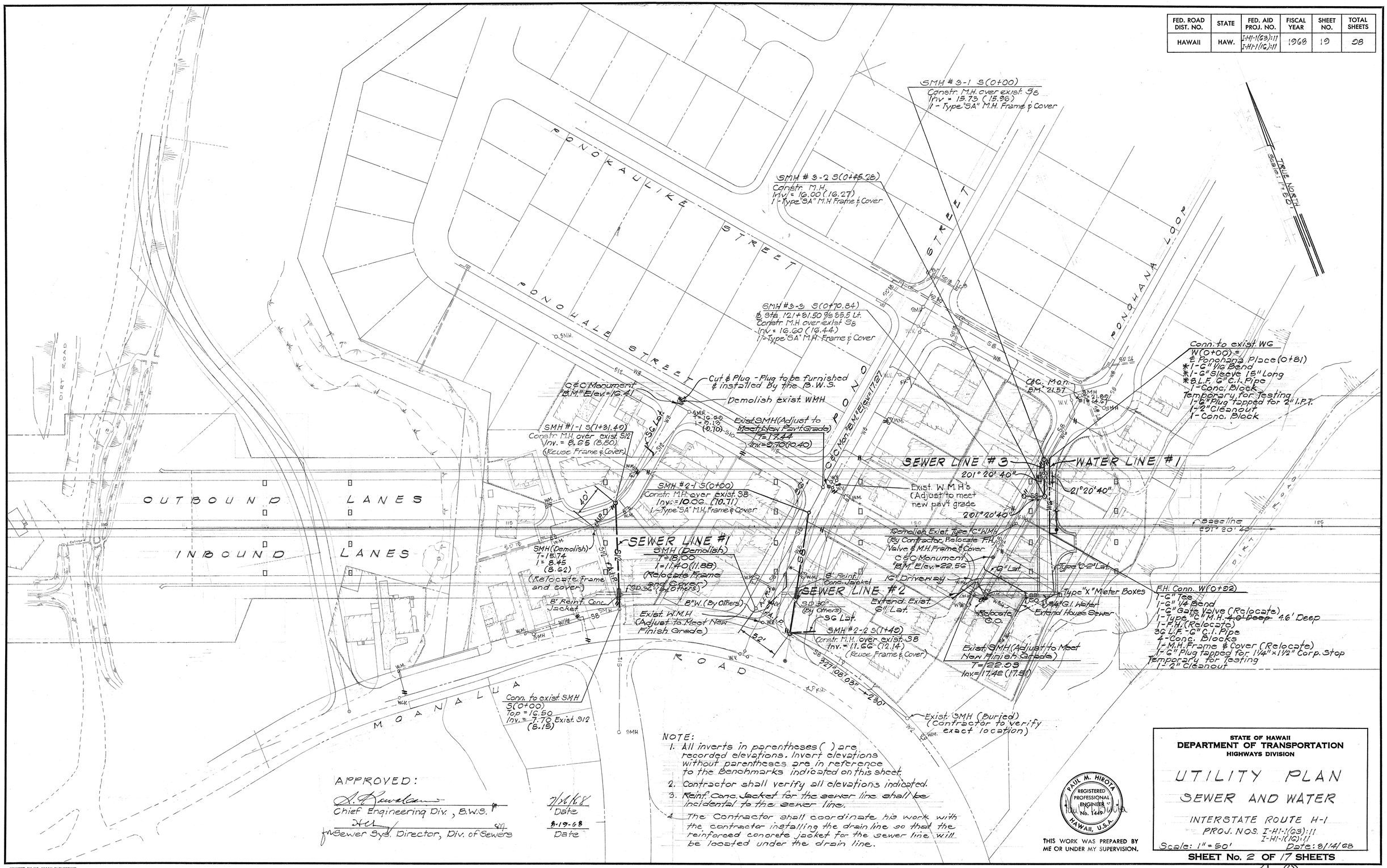

NOTE:

1. All inverts in parentheses ( ) are recorded elevations. Invert elevations without parentheses are in reference to the Benchmarks indicated on this sheet.
2. Contractor shall verify all elevations indicated.
3. Reinf. Conc. Jacket for the sewer line shall be incidental to the sewer line.
4. The Contractor shall coordinate his work with the contractor installing the drain line so that the reinforced concrete jacket for the sewer line will be located under the drain line.

APPROVED:

Chief Engineering Div., B.W.S. — 7/26/68 Date

Sewer Sys. Director, Div. of Sewers — 8-19-68 Date

PAUL M. HIROTA
REGISTERED PROFESSIONAL ENGINEER
No. 1449
HAWAII, U.S.A.

THIS WORK WAS PREPARED BY ME OR UNDER MY SUPERVISION.

STATE OF HAWAII
DEPARTMENT OF TRANSPORTATION
HIGHWAYS DIVISION

UTILITY PLAN
SEWER AND WATER

INTERSTATE ROUTE H-1
PROJ. NOS. I-HI-1(23):11
I-HI-1(16):11

Scale: 1" = 50' Date: 8/14/68

SHEET No. 2 OF 17 SHEETS

ORIGINAL PLAN		DATE
	SURVEY PLOTTED BY	
	DRAWN BY	
	TRACED BY	
	DESIGNED BY	
NOTE BOOK	QUANTITIES BY	
No.	CHECKED BY	

PRINTED ON NO. 1000H CLEARPRINT

19

FED. ROAD DIST. NO.	STATE	FED. AID PROJ. NO.	FISCAL YEAR	SHEET NO.	TOTAL SHEETS
HAWAII	HAW.	I-H1-1(23):11 I-H1-1(12):11	1968	20	28

REFERANCE NOTES:

1. For details of H.T. Pull Box #435 T-B, see Sht. 38
2. For profiles of duct lines, see Sht. 21
3. For details of Double 3'x5' Precast Handhole see Sht. 34
4. Contractor shall excavate & backfill trench for H.E.Co. direct buried cable in Lot Tax Map Key 9-8-26:70. Furnishing & installing cable shall be by H.E.Co. (To be measured & paid for under Item 120.3651.)

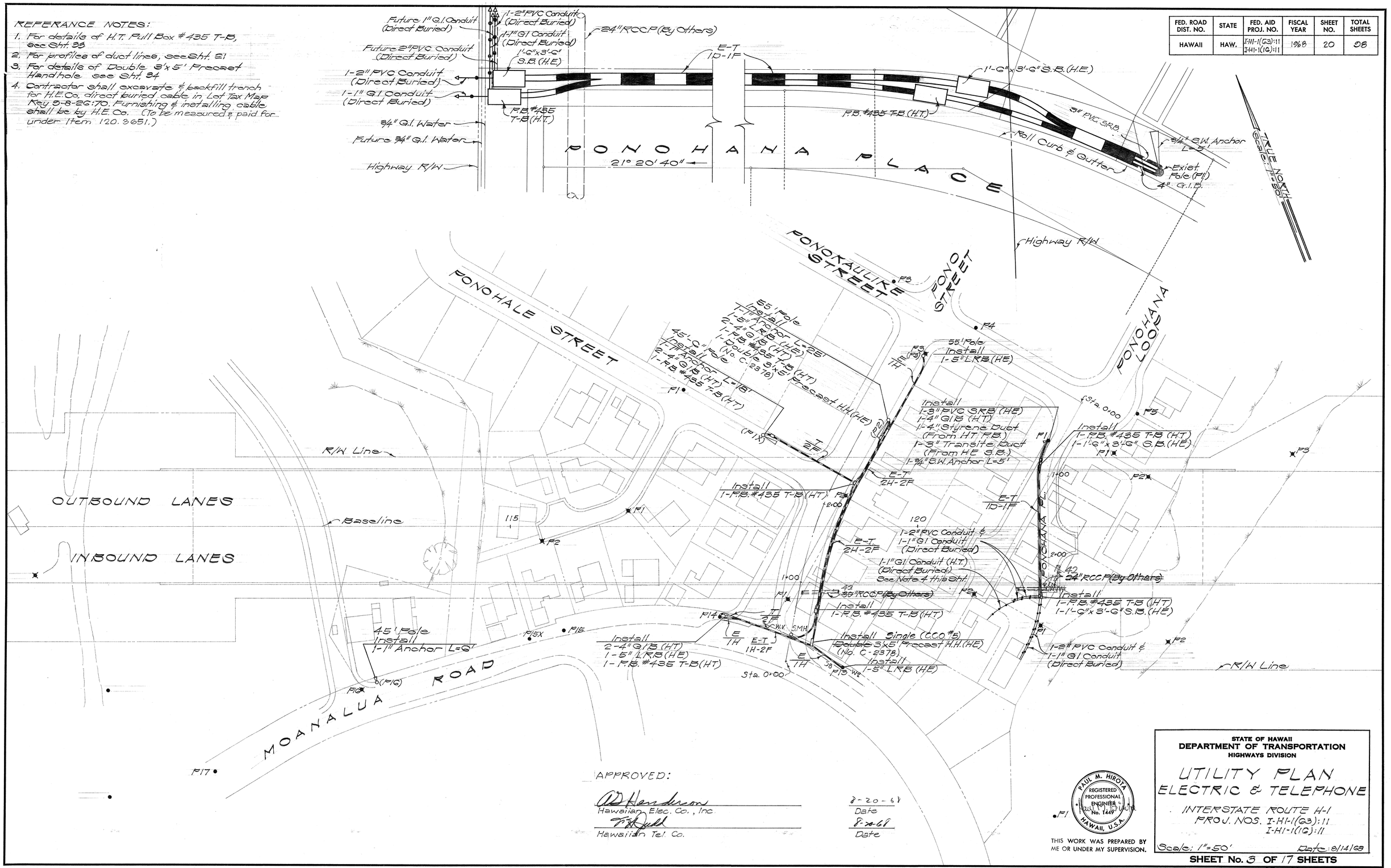

APPROVED:

A.D. Henderson — 8-20-68
Hawaiian Elec. Co., Inc. — Date

T. Hull — 8-20-68
Hawaiian Tel. Co. — Date

PAUL M. HIROTA — REGISTERED PROFESSIONAL ENGINEER — No. 1449 — HAWAII, U.S.A.

THIS WORK WAS PREPARED BY ME OR UNDER MY SUPERVISION.

STATE OF HAWAII
DEPARTMENT OF TRANSPORTATION
HIGHWAYS DIVISION

UTILITY PLAN
ELECTRIC & TELEPHONE

INTERSTATE ROUTE H-1
PROJ. NOS. I-H1-1(23):11
I-H1-1(12):11

Scale: 1" = 50' — Date: 8/14/68

SHEET No. 3 OF 17 SHEETS

20

ORIGINAL PLAN		DATE
	SURVEY PLOTTED BY	
	DRAWN BY	
	TRACED BY	
NOTE BOOK	DESIGNED BY	
	QUANTITIES BY	
No.	CHECKED BY	

PRINTED ON NO. 1000H CLEARPRINT

FED. ROAD DIST. NO.	STATE	FED. AID PROJ. NO.	FISCAL YEAR	SHEET NO.	TOTAL SHEETS
HAWAII	HAW.	I-HI-1(63):11 I-HI-1(12):11	1968	21	28

LEGEND FOR CONDUIT	
CONDUIT SIZE	SYMBOL
3"	D
4"	F
5"	H

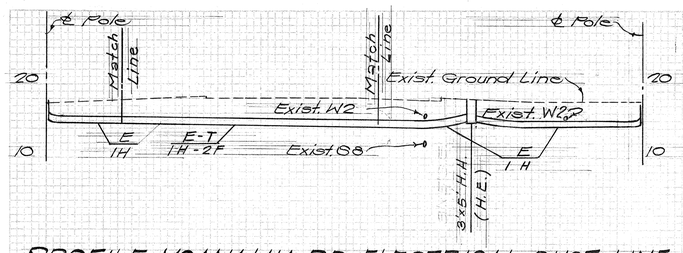

PROFILE-MOANALUA RD. ELECTRICAL DUCT LINE
Scales: Horiz. 1"=20'
Vert. 1"=10'

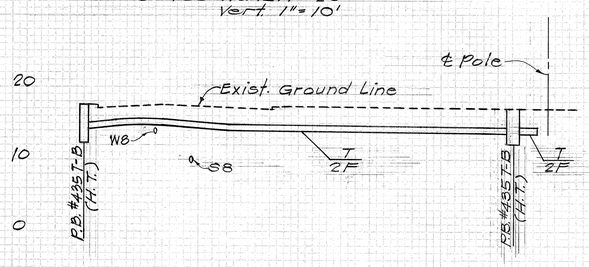

PROFILE-PONOHALE ST. TELEPHONE DUCT LINE
Scales: Horiz. 1"=20'
Vert. 1"=10'

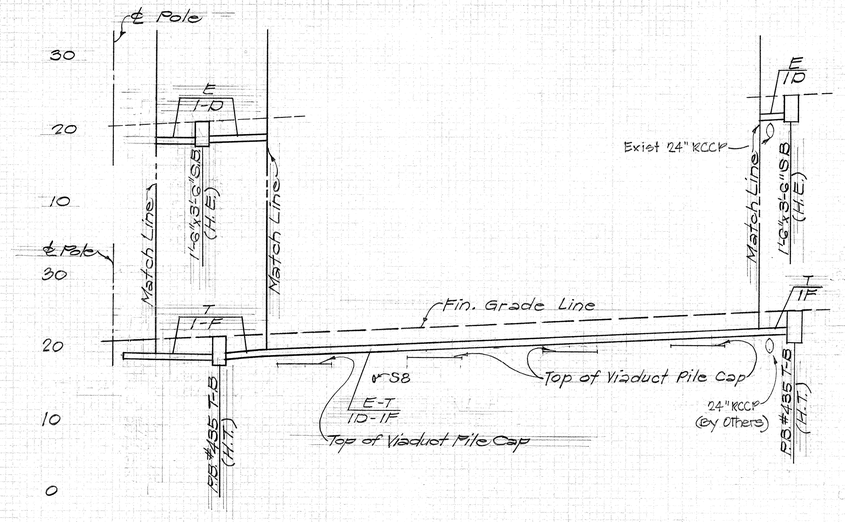

PROFILE-PONOHANA PL. ELEC. & TELE. DUCT LINE
Scales: Horiz. 1"=20'
Vert. 1"=10'

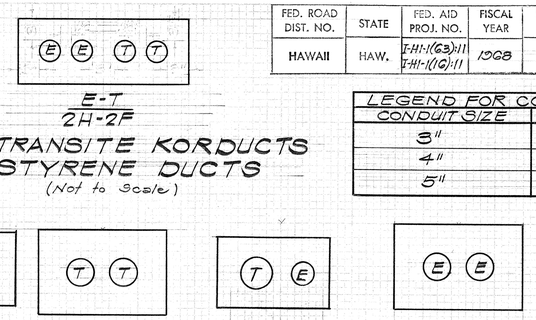

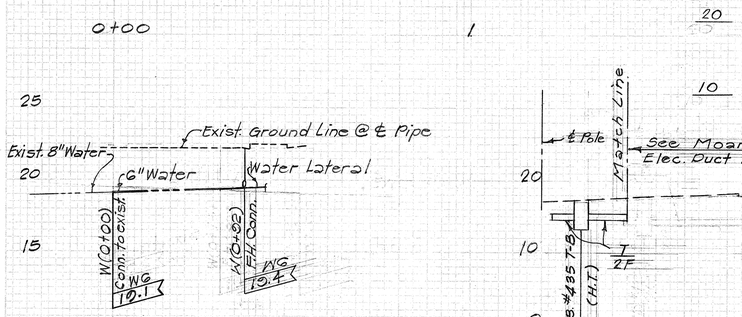

PROFILE-WATER LINE #1
Scales: Horiz. 1"=50'
Vert. 1"=5'

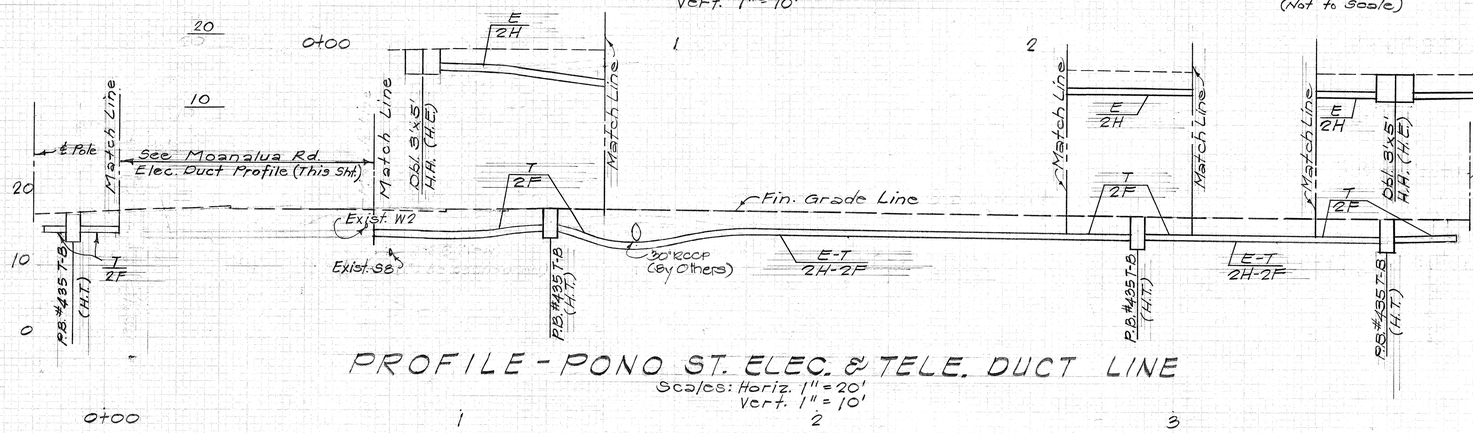

PROFILE-PONO ST. ELEC. & TELE. DUCT LINE
Scales: Horiz. 1"=20'
Vert. 1"=10'

1 - 2" P.V.C. Conduit &
1 - 1" G.I. Conduit
(Direct Burial)

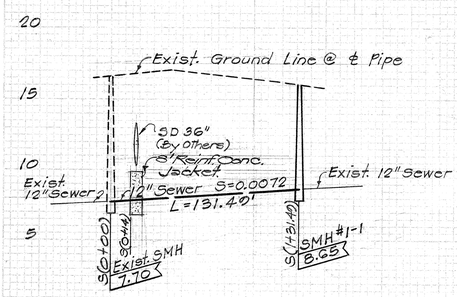

PROFILE-SEWER LINE #1
Scales: Horiz. 1"=50'
Vert. 1"=5'

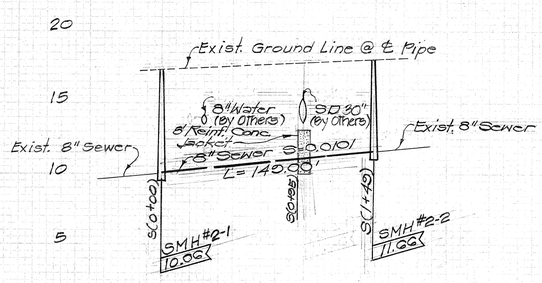

PROFILE-SEWER LINE #2
Scales: Horiz. 1"=50'
Vert. 1"=5'

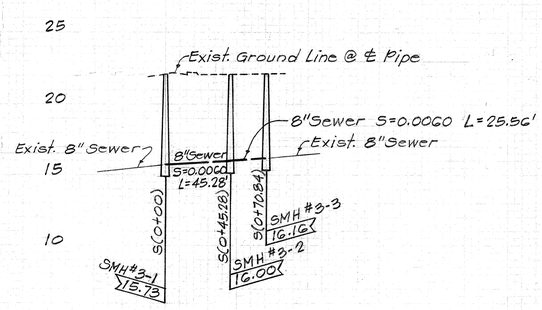

PROFILE-SEWER LINE #3
Scales: Horiz. 1"=50'
Vert. 1"=5'

APPROVED:

Hawaiian Elec. Co., Inc.	8-20-68 Date
Hawaiian Tel. Co.	8-20-68 Date
Chief, Engineering Div., B.W.S.	7/26/68 Date
for Sewer Sys. Director, Div. of Sewers	8-19-68 Date

PAUL M. HIROTA REGISTERED PROFESSIONAL ENGINEER No. 1449 HAWAII, U.S.A.

THIS WORK WAS PREPARED BY ME OR UNDER MY SUPERVISION.

STATE OF HAWAII
DEPARTMENT OF TRANSPORTATION
HIGHWAYS DIVISION

UTILITY PROFILE
SEWER, WATER, ELECTRIC AND TELEPHONE
INTERSTATE ROUTE H-1
PROJ. NOS. I-HI-1(63):11
I-HI-1(12):11

Scale: As Shown Date: 8/14/68

SHEET No. 4 OF 17 SHEETS

21

FED. ROAD DIST. NO.	STATE	FED. AID PROJ NO.	FISCAL YEAR	SHEET NO.	TOTAL SHEETS
HAWAII	HAWAII	I-H1-1(63):11 I-H1-1(16):11	1968	22	98

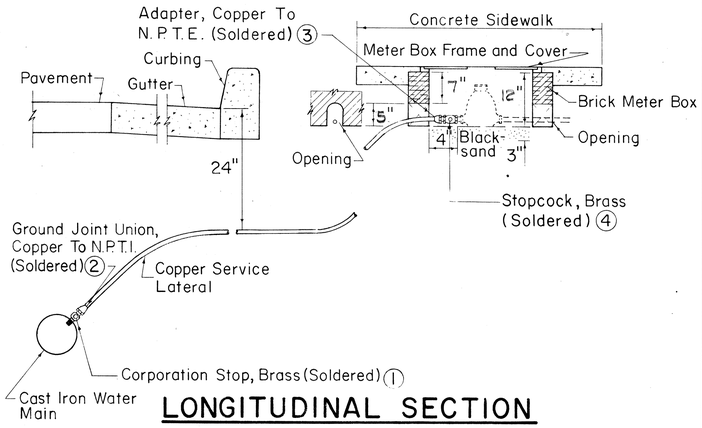

LONGITUDINAL SECTION

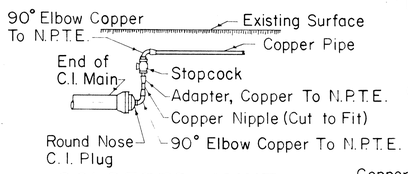

SOLDERED JOINT

SERVICE LATERAL CONNECTION AT END OF LINE

NOTE:

All castings shall be made accurately to the dimensions shown. Seat and cover shall be machined or ground where necessary to secure flat and true surfaces. The cover shall not rattle in any position.

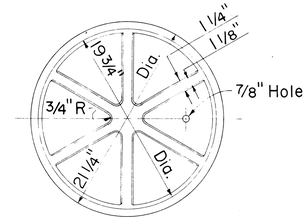

BOTTOM VIEW OF COVER

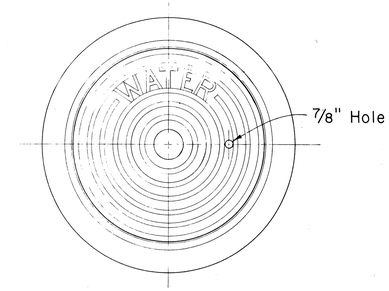

PLAN OF FRAME AND COVER

MANHOLE FRAME & COVER CAST IRON, 20" SIZE

SCALE: 1-1/2" = 1'-0"

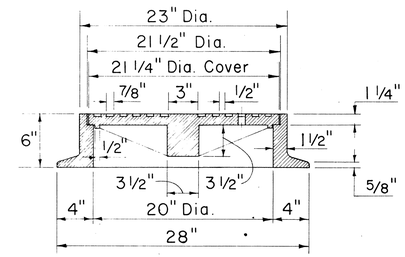

SECTION OF FRAME AND COVER

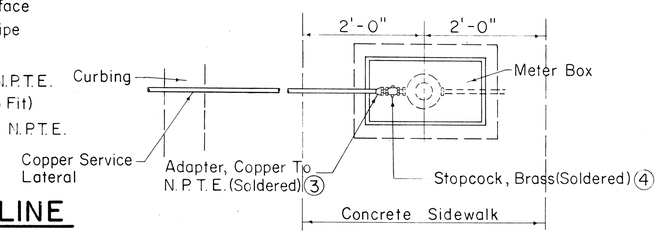

SINGLE SERVICE CONNECTION

SCHEDULE OF COPPER FITTINGS (SOLDERED JOINT)

ITEM NO.	DESCRIPTION	SINGLE SERVICE CONN.	MULTIPLE SERV. CONN. TWO SERVICES	MULTIPLE SERV. CONN. THREE SERVICES
1	Corporation Stop Brass (H-10003)	1	1	1
2	Ground Joint Union (Style Copper To N.P.T.E. No. C-109)	1	1	1
3	Adapter, Copper To N.P.T.E. (Style No. C-101)	2	1	1
4	Stopcock Brass (B.W.S Standard)	1	1	1
5	Fitting Adapter, (Style Fitting To N.P.T.E. No. C-104)	—	1	1
6	Tee, Copper To Copper To Copper (Style No. T-300)	—	1	1
7	Bushings, Fitting To Copper (Style No. C-103)	—	2	2
8	90° Elbow, Copper To Copper (Style No. C-200)	—	2	2
9	Adapter, Copper To N.P.T.E. (Style No. C-101)	1	2	3
10	Stopcock Brass (B.W.S. Standard)	1	2	3
11	Reducing Tee, Copper To Copper To Copper (Substitute For Items Number 6 and 7). (Style No. T-300)	—	1	1
12	Tee, Copper To Copper To Copper (Style No. T-300)	—	—	1
13	Bushing, Fitting To Copper (Style No. C-103)	—	—	1
14	Reducing Tee, Copper To Copper To Copper (Substitute For Items Number 12 and 13 (Style No. T-300)	—	—	1

NOTE:

Reference Numbers shown thus (H-10003) are from Mueller Co. Catalog "H" and (Style No. T-300) are from Mueller Brass Co. "Streamline" Catalog S-354. Approved Equal may be used.

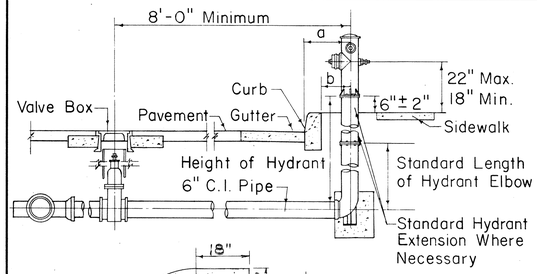

a	20" Min. (Standard Curb)
b	20" Min. (Roll Curb)

NOTE:

Gaskets for flanged joints shall be 1/16 inch duck-inserted rubber packing Garlock No. 19.

Bolts shall be 5/8" diameter x 2 3/4" long steel machine bolts with cut threads, American Standard heavy hexagon heads, galvanized.

Nuts shall be American Standard heavy cold punched hexagon nuts, galvanized.

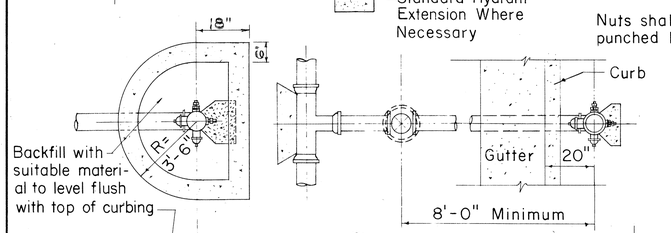

LAYOUT NO. 1

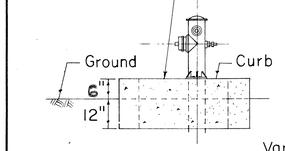

DETAIL OF CURBING AT HYDRANT WHERE REQUIRED

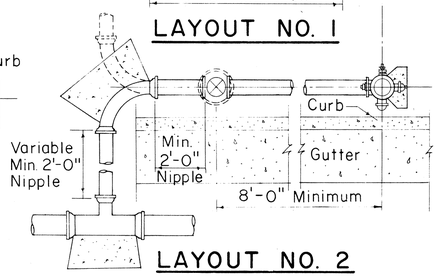

LAYOUT NO. 2

STANDARD FIRE HYDRANT LAYOUT

STANDARD LENGTHS FOR HYDRANT ELBOWS
30"
36"
42"
48"

Standard Hydrant Extensions are available in the following Lengths:

6 to 30 inches long in in increments of 6 inches

TYPE "A" METER BOX

TYPE "B" METER BOX

TYPE "X" METER BOX

SERVICE LATERAL SERVICE CONNECTION

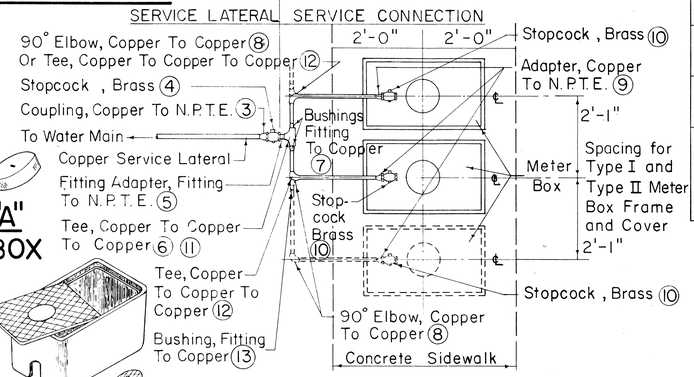

MULTIPLE SERVICE CONNECTION SOLDERED JOINTS

METER BOX DATA					
TYPE METER BOX	METER SIZES	OVERALL DIMENSIONS AT BOTTOM	OVERALL DIMENSIONS AT TOP	COMPLETE WEIGHT	OVERALL DIMENSIONS OF LID
A	5/8" or 3/4" Without Valve	7 1/4" x 7 1/4"	10" x 10"	45 lbs.	7 3/8" Dia.
B	5/8" or 3/4"	9 1/2" x 16"	12 1/4" x 18 3/8"	82 lbs.	8 3/4" x 14 1/2"
X		14 1/2" x 23 1/2"	16" x 25"	143 lbs.	13 1/8" x 22 1/8"

APPROVED:

A. K. Kawakami 7/26/68

CHIEF, ENGINEERING DIVISION BOARD OF WATER SUPPLY — DATE

STATE OF HAWAII
DEPARTMENT OF TRANSPORTATION
HIGHWAYS DIVISION
BOARD OF WATER SUPPLY
CITY & COUNTY OF HONOLULU

STANDARD WATER DETAILS

Scale: As Noted — Date 8/14/68

SHEET NO. 5 OF 17 SHEETS

22 22

LIETZ 1103 ARKWRIGHT TRACING CLOTH 10-60 200P

FED. AID DIST. NO.	STATE	FED. AID PROJ. NO.	FISCAL YEAR	SHEET NO.	TOTAL SHEETS
HAWAII	HAWAII	I-HI-1(63)11 I-HI-1(16)11	1968	20	28

NOTE:
Contractor to furnish 1½" brass plug (Tapered thread) to replace corporation stop upon completion of chlorination.

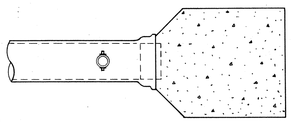

TOP VIEW

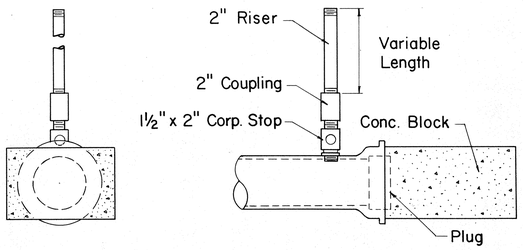

END VIEW

SIDE VIEW

DETAIL OF TEMPORARY 2" CLEANOUT

Not to Scale

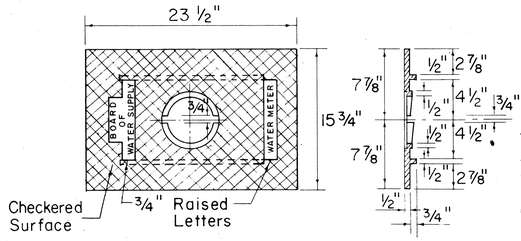

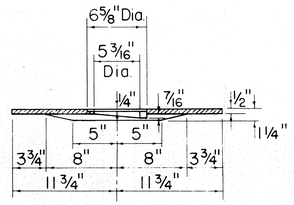

COVER PLATE

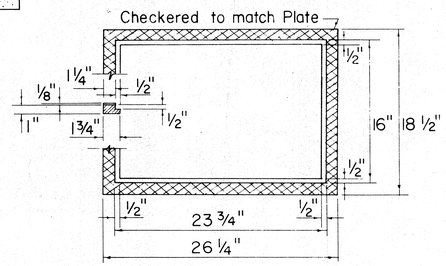

FRAME

CAST IRON FRAME AND PLATE TYPE II

Scale: 1½" = 1'-0"

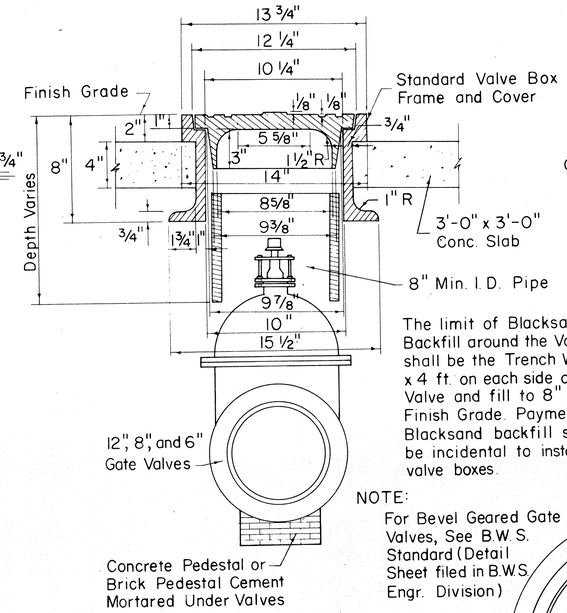

The limit of Blacksand Backfill around the Valve shall be the Trench Width x 4 ft. on each side of Valve and fill to 8" below Finish Grade. Payment for Blacksand backfill shall be incidental to installing valve boxes.

NOTE:
For Bevel Geared Gate Valves, See B.W.S. Standard (Detail Sheet filed in B.W.S. Engr. Division)

INSTALLATION OF VALVE BOX FOR GATE VALVES

Not to Scale

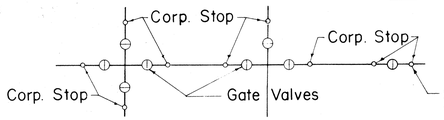

Size of one Corp. Stop given in Table "A". Extra Corp. Stop required at valves located on the "run" shall be 1" x 1¼" for all sizes of pipes and shall be installed as directed by the Engineer.

CORP. STOP LAYOUT

Not to Scale

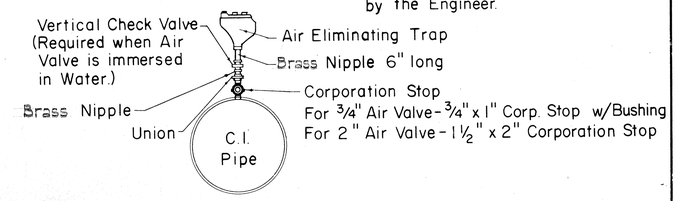

DETAIL OF CONNECTION FOR AIR ELIMINATING TRAP

Not to Scale

Offset word "WATER" 1¾" high, ⅛" deep

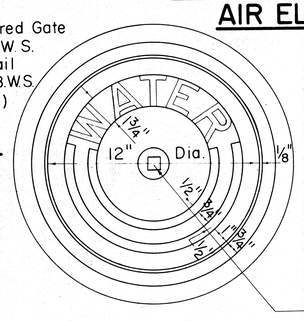

NOTE:
All castings shall be made accurately to the dimensions shown. Seat and Cover shall be ground where necessary to secure flat and true surfaces. The Cover shall not rattle in any position.

Minor changes in dimensions may be made to suit foundry conditions provided such changes are approved by the Board of Water Supply.

CAST IRON FRAME AND COVER

Scale: 3" = 1'-0"

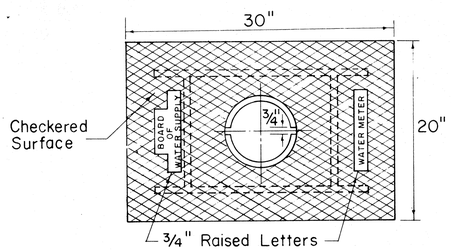

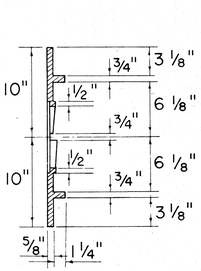

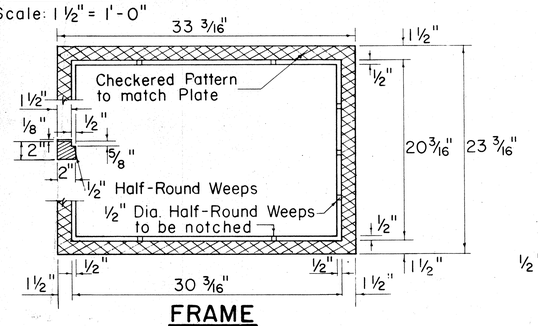

FRAME

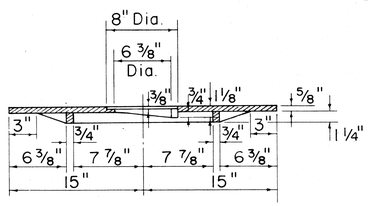

COVER PLATE

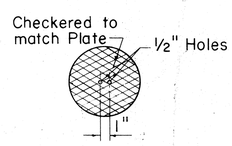

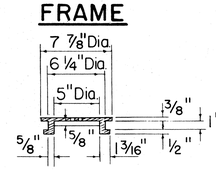

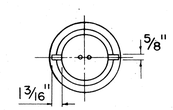

READING COVER

CAST IRON FRAME, PLATE AND COVER TYPE III

Scale: 1½" = 1'-0"

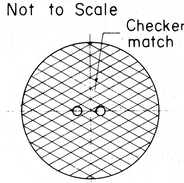

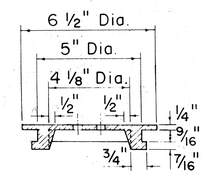

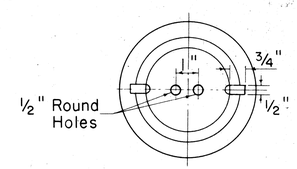

READING COVER

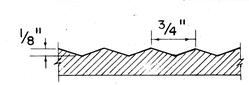

CHECKERED PATTERN

CAST IRON COVER FOR TYPE II FRAME

Not to Scale

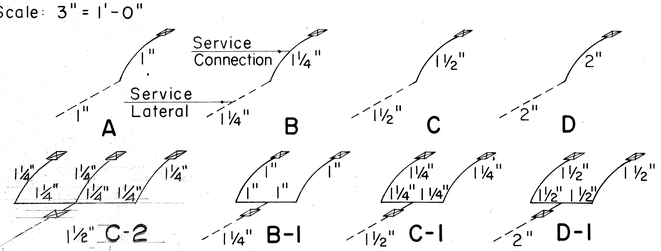

TYPICAL LAYOUT OF SERVICE LATERALS AND CONNECTIONS

Not to Scale

APPROVED:

CHIEF, ENGINEERING DIVISION B.W.S. — DATE 8/24/68

STATE OF HAWAII
DEPARTMENT OF TRANSPORTATION
HIGHWAYS DIVISION

BOARD OF WATER SUPPLY
CITY & COUNTY OF HONOLULU

STANDARD WATER DETAILS

Scale: As Noted — Date 8/14/68

SHEET NO. 6 OF 17 SHEETS

FED. AID DIST. NO.	STATE	FED. AID PROJ. NO.	FISCAL YEAR	SHEET NO.	TOTAL SHEETS
HAWAII	HAWAII	I-H1-1(69):11 I-H1-1(16):11	1968	24	08

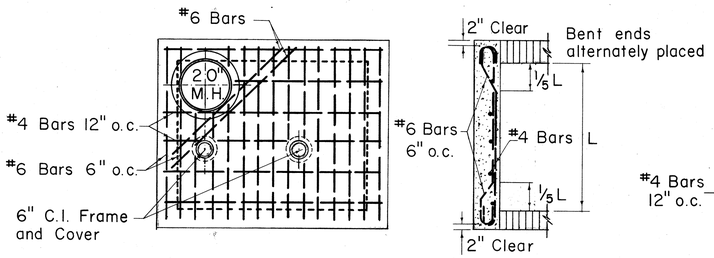

PLAN OF TOP SLAB

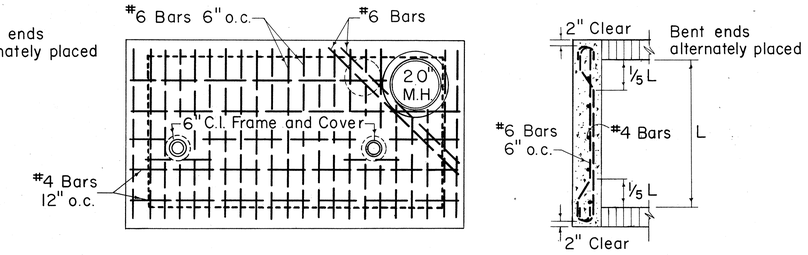

PLAN OF TOP SLAB

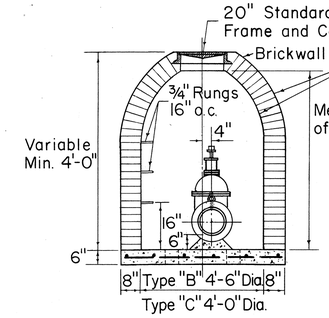

SECTION A-A

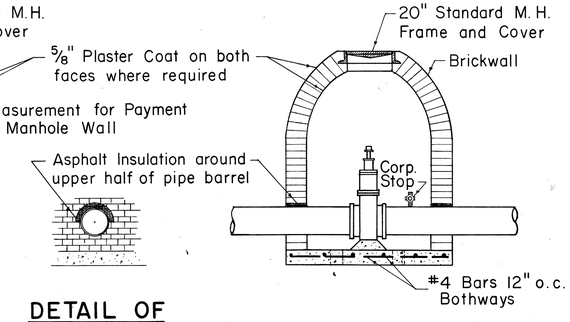

DETAIL OF ASPHALT FILLER

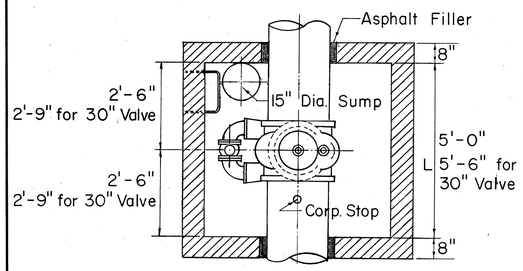

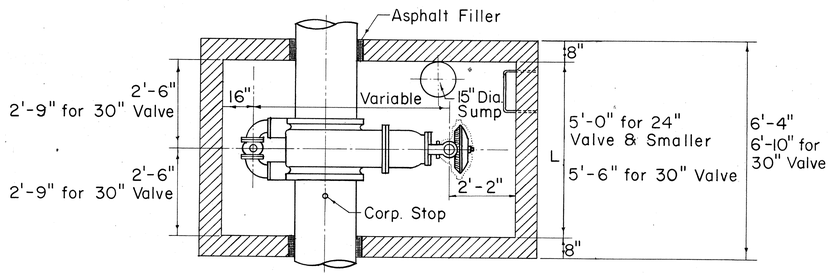

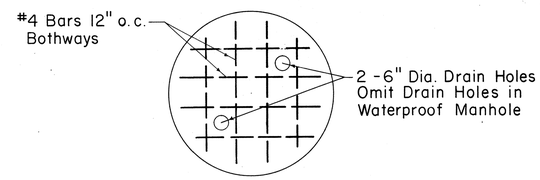

STEEL DETAIL IN BOTTOM SLAB

TABLE "A"

REQUIRED CORPORATION STOP SIZES AT GATE VALVE

DIA. OF MAIN INCHES	SIZE OF CORP. STOP
4	1" x 1¼"
6	1" x 1¼"
8	1" x 1¼"
12	1" x 1¼"
16	1" x 1¼"
20	1" x 1¼"
24	1½" x 2"
36	1½" x 2"
42	1½" x 2"

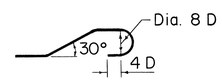

BAR BENDING DETAIL

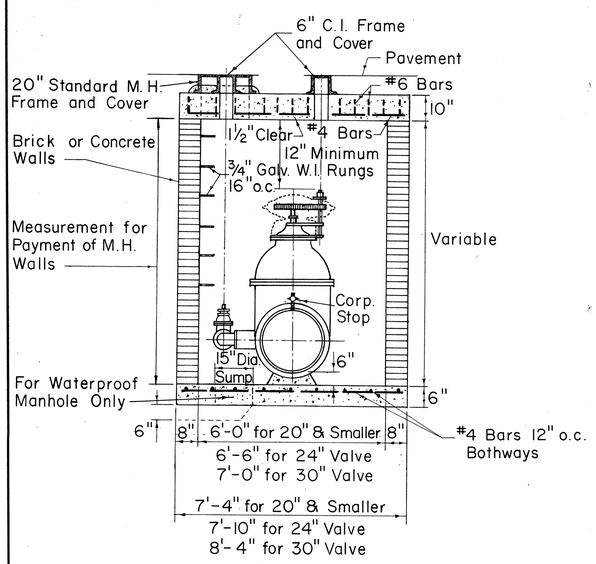

SECTION

TYPE "A" MANHOLE FOR SPUR GEARED GATE VALVES

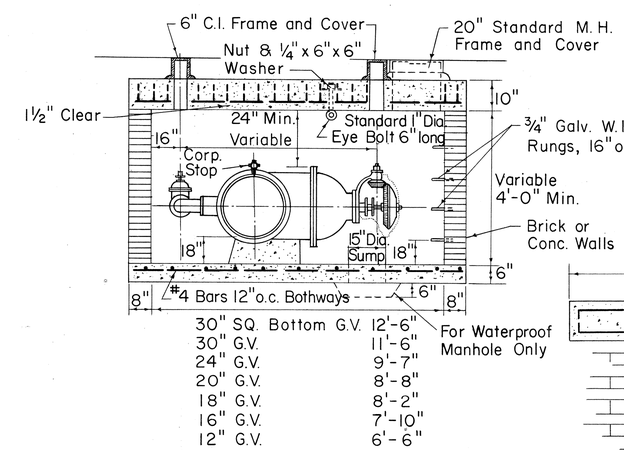

SECTION

TYPE "A" MANHOLE FOR BEVEL GEARED GATE VALVES

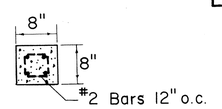

SECTION THRU LINTEL

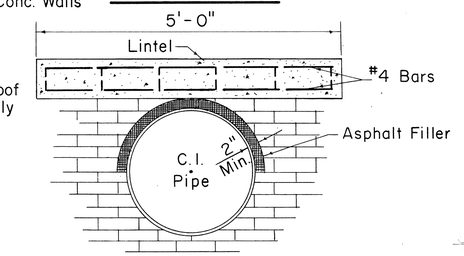

DETAIL OF LINTEL AND ASPHALT FILLER

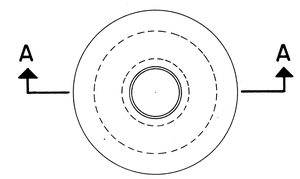

PLAN

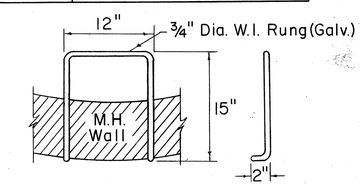

DETAIL OF RUNG

TYPE "B" AND "C" MANHOLES

TYPE "B" 4'-6" DIA. (FOR 12" G.V.)

TYPE "C" 4'-0" DIA. (FOR 6" & 8" G.V.)

APPROVED:

A. Kawakami 7/24/68

CHIEF, ENGINEERING DIVISION B.W.S. DATE

STATE OF HAWAII
DEPARTMENT OF TRANSPORTATION
HIGHWAYS DIVISION

BOARD OF WATER SUPPLY
CITY & COUNTY OF HONOLULU

STANDARD WATER DETAILS

Not to Scale

Date 8/14/68

SHEET NO. 7 OF 17 SHEETS

24

LIETZ 1103 ARKWRIGHT TRACING CLOTH 10-60 200P

FED. AID DIST. NO.	STATE	FED. AID PROJ. NO.	FISCAL YEAR	SHEET NO.	TOTAL SHEETS
HAWAII	HAWAII	I-H1-1(22):11 I-H1-1(16):11	1968	25	98

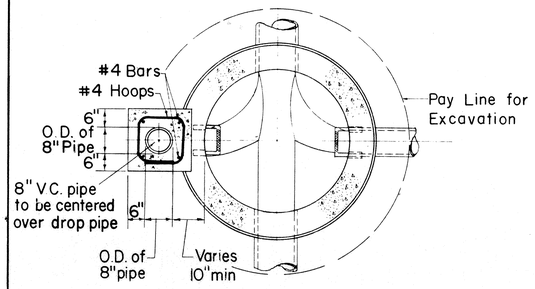

SECTION A-A

Scale: ½"=1'-0"

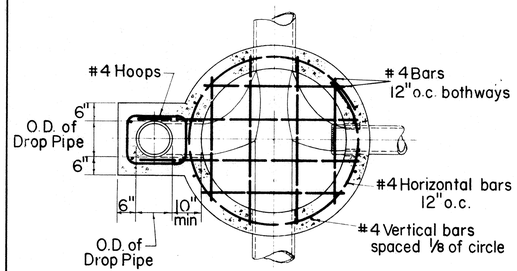

SECTION B-B

Scale: ½" = 1'-0"

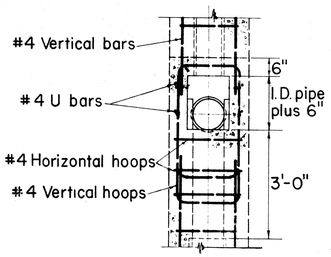

SECTION C-C

Scale: ½" = 1'-0"

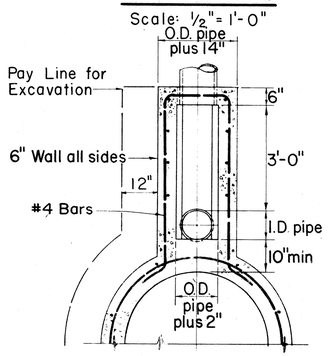

SECTION D-D

Scale: ½" = 1'-0"

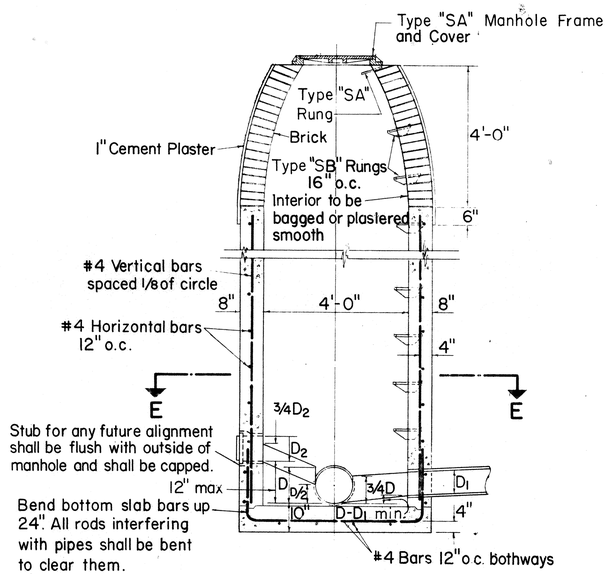

PLAIN MANHOLE

Scale: ½"=1'-0"

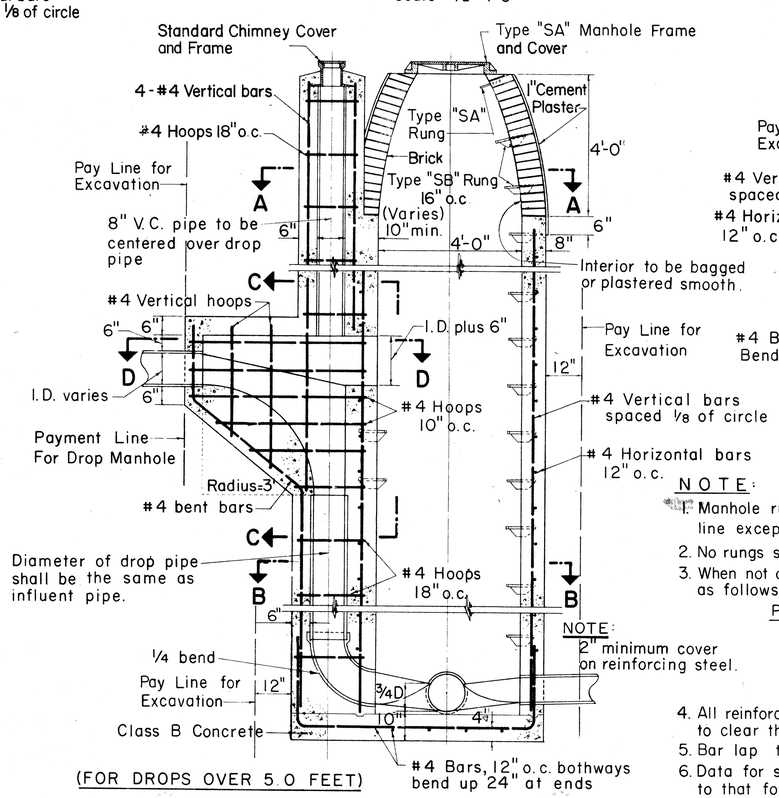

(FOR DROPS OVER 5.0 FEET)

DROP MANHOLE

Scale: ½"=1'-0"

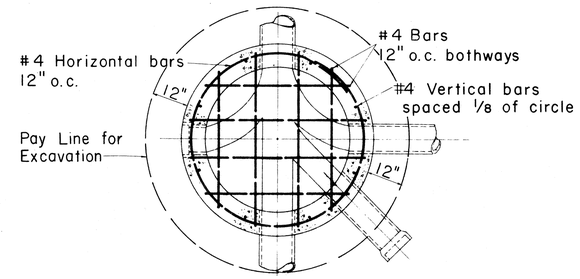

SECTION E-E

Scale: ½" = 1'-0"

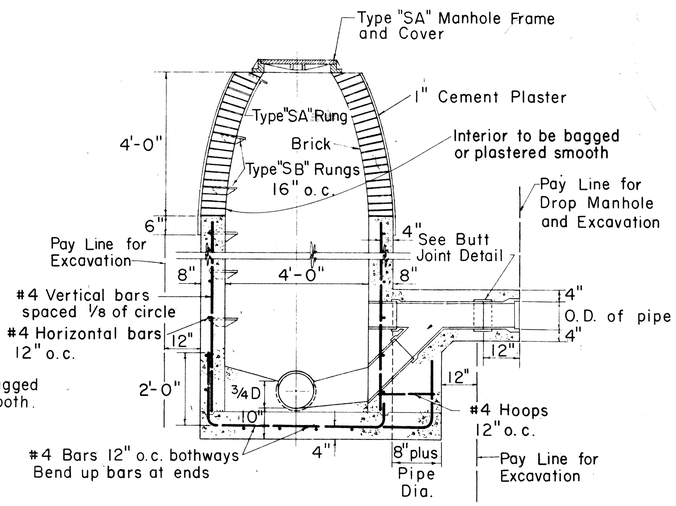

(FOR DROPS UNDER 5.0 FEET)

SHALLOW DROP MANHOLE

Scale: ½"=1'-0"

NOTE:

1. Manhole rungs shall not be aligned above any flow line except in drop manhole.
2. No rungs shall be installed in manholes less than 3' high.
3. When not otherwise noted, manhole stubs shall be sloped as follows:

Pipe Size	Rise Per Foot
6"	⅛"
8"	3/32"
10"	1/16"
12"	1/16"

4. All reinforcing rods interfering with pipes shall be bent to clear them.
5. Bar lap to be 40 diameters in length.
6. Data for special manholes not shown shall be similar to that for plain manholes.
7. Size of drop pipe in all Drop Manholes shall be same as influent line.
8. Manhole wall to be of reinforced concrete to height 1' above normal ground water table.

NOTE:

Reinforced concrete manhole walls (See detail of plain manhole) shall be used for portions below the water table.

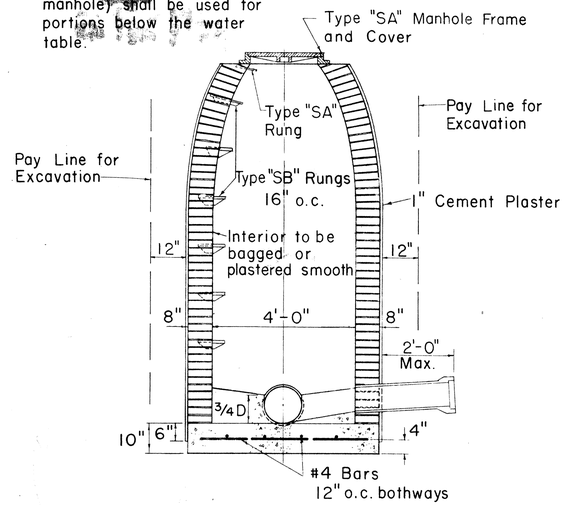

(MAXIMUM HEIGHT - 10.0 FEET)

BRICK MANHOLE

Scale: ½"=1'-0"

Payment for excavation for manholes shall be made under unit price for trench excavation and shall be measured to one foot outside of walls from original ground elevation to authorized bottom elevation.

Payment for manhole walls (brick, or cast-in-place concrete) shall include brick, motar, concrete, reinforcing steel, cast-iron steps, galvanized wrought iron rungs, and plastering.

APPROVED:

SEWER SYSTEM DIRECTOR, DIVISION OF SEWERS — DATE 8-19-68

STATE OF HAWAII
DEPARTMENT OF TRANSPORTATION
HIGHWAYS DIVISION
DIVISION OF SEWERS
CITY & COUNTY OF HONOLULU

STANDARD DETAILS

SEWERS - DROP MANHOLE AND BRICK MANHOLE DETAILS

Scales: As Noted — Date: 8/14/68

SHEET NO. 8 OF 17 SHEETS

25

IMPERIAL 156 K&E CO., N.Y. TRADE MARK

FED. AID DIST. NO.	STATE	FED. AID PROJ. NO.	FISCAL YEAR	SHEET NO.	TOTAL SHEETS
HAWAII	HAWAII	H-H-1(63)·11 I-H-1(16)·11	1968	26	28

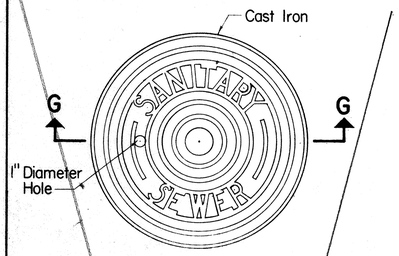

PLAN OF MANHOLE COVER

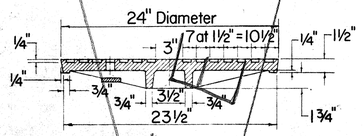

SECTION G-G

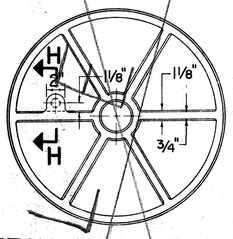

BOTTOM VIEW OF COVER

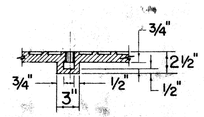

SECTION H-H

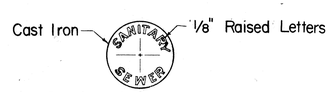

PLAN OF COVER

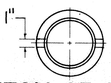

BOTTOM OF COVER

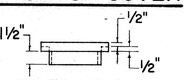

ELEVATION

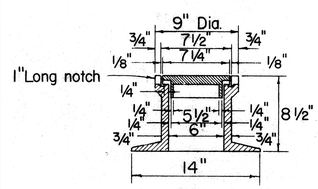

SECTION

DROP MANHOLE CHIMNEY CASTINGS

Scale: 1½" = 1'-0"

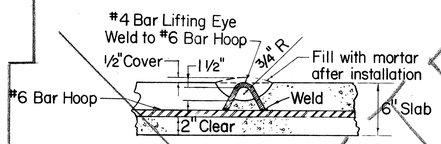

SECTION OF LIFTING EYE

Scale: 1½" = 1'-0"

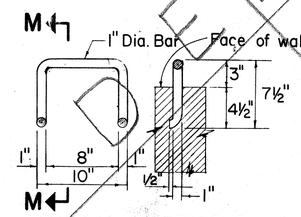

PLAN SECTION M-M

TYPE "A" MANHOLE RUNGS WROUGHT IRON

Scale: 1½" = 1'-0"

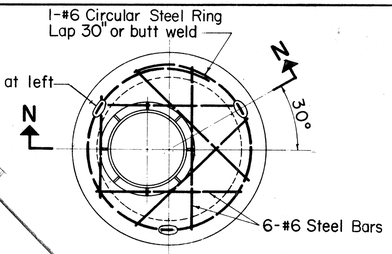

PLAN

PRECAST MANHOLE

Scale: ½" = 1'-0"

Note: Reinforcing Steel shall be the same as that required for plain manhole except as noted.

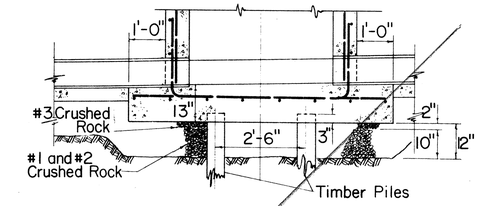

SECTION F-F

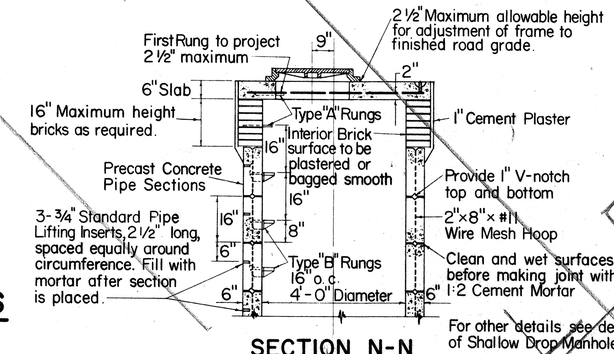

SECTION N-N

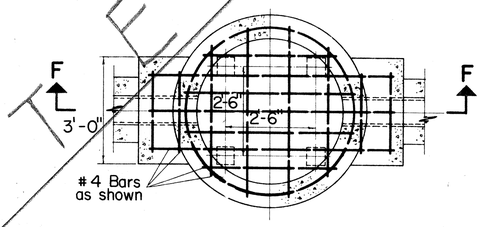

PLAN

DETAIL OF PILES UNDER MANHOLES

Scale: ½" = 1'-0"

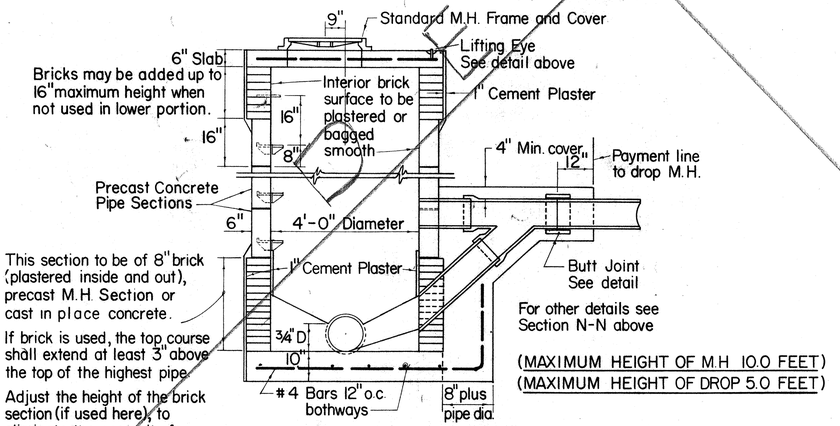

SHALLOW DROP MANHOLE USING PRECAST CONCRETE PIPE SECTIONS

Scale: ½" = 1'-0"

Note:

1. When backfilling around Precast Manhole, material shall be deposited in such a manner that the difference in elevation on one side of the manhole shall not exceed the elevation on the other side by more than 5 feet.
2. Pipe sections may be made in heights other than 16 inches if desired.
3. Size of drop pipe shall be same as influent pipe.

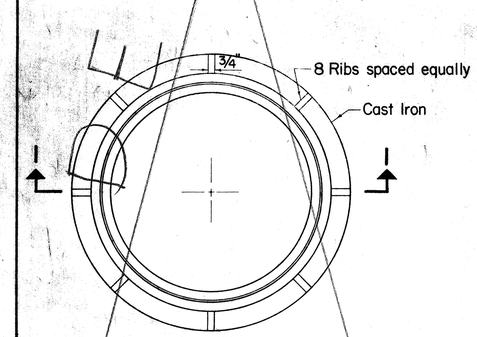

PLAN OF MANHOLE FRAME

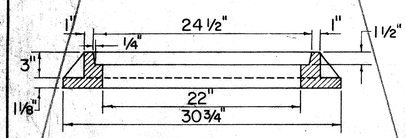

SECTION I-I

TYPE "A" SEWER MANHOLE FRAME AND COVER

Scale: 1½" = 1'-0"

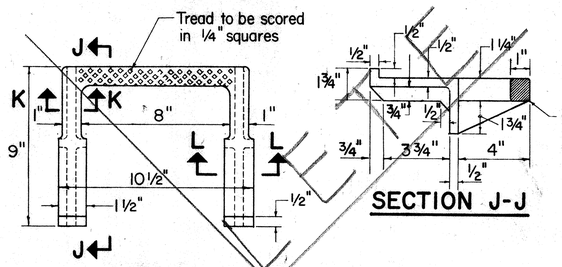

PLAN

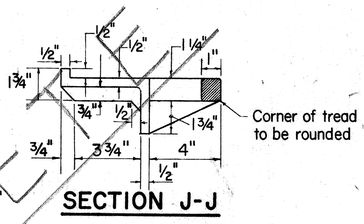

SECTION J-J

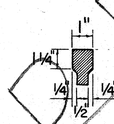

SECTION K-K

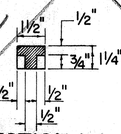

SECTION L-L

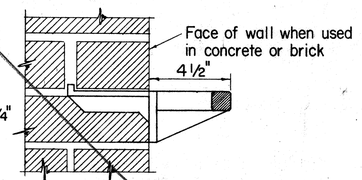

METHOD OF INSTALLATION

TYPE "B" MANHOLE RUNGS (CAST IRON)

Scale: 3" = 1'-0"

APPROVED:

SEWER SYSTEM DIRECTOR, DIVISION OF SEWERS — DATE 8-19-68

STATE OF HAWAII
DEPARTMENT OF TRANSPORTATION
HIGHWAYS DIVISION

DIVISION OF SEWERS
CITY & COUNTY OF HONOLULU

STANDARD DETAILS

SEWERS - DROP MANHOLE AND FRAME AND COVER DETAILS

Scales: As Noted — Date 8/14/68

SHEET NO. 9 OF 17 SHEETS

26

IMPERIAL 170 E & B CO., N.Y. TRADE MARK

FED AID DIST. NO.	STATE	FED AID PROJ NO	FISCAL YEAR	SHEET NO.	TOTAL SHEETS
HAWAII	HAWAII	F-HI-1(63):11 I-HI-1(16):11	1968	27	98

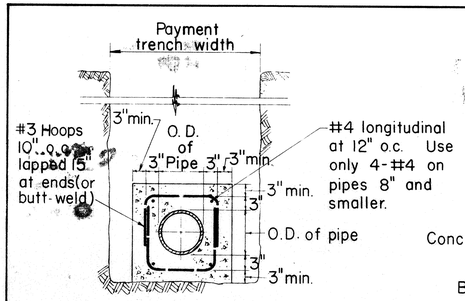

DETAIL OF CONCRETE JACKET

Scale: 3/4" = 1'-0"

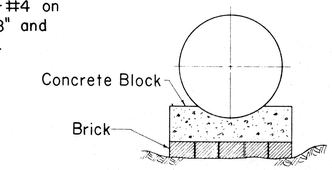

METHOD OF USING BRICKS UNDER CONCRETE BLOCKS

Not To Scale

Contractor shall set Concrete Blocks on undisturbed ground. Where ground is too low, the contractor shall not heap up dirt under the Concrete Block but use Concrete Bricks to take up the deficiency, scraping away beneath Concrete Block to give sufficient room for Brick.

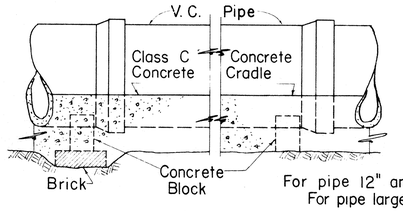

ELEVATION SHOWING METHOD OF LAYING PIPE

Not To Scale

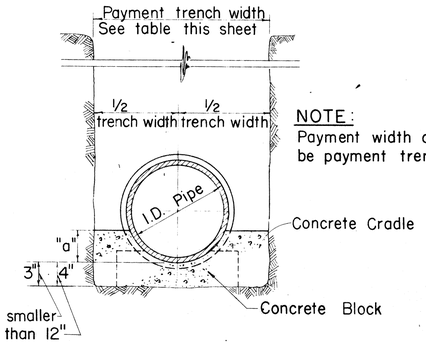

NOTE:
Payment width of cradle shall be payment trench width.

CONCRETE CRADLE FOR VITRIFIED CLAY PIPE

Not To Scale

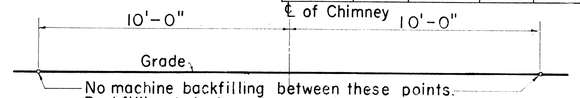

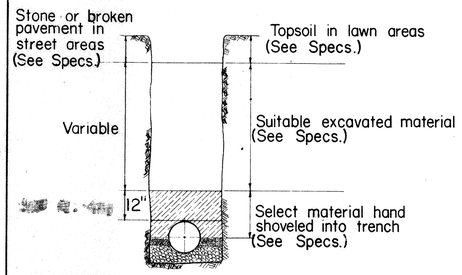

METHOD OF BACKFILL

Not To Scale

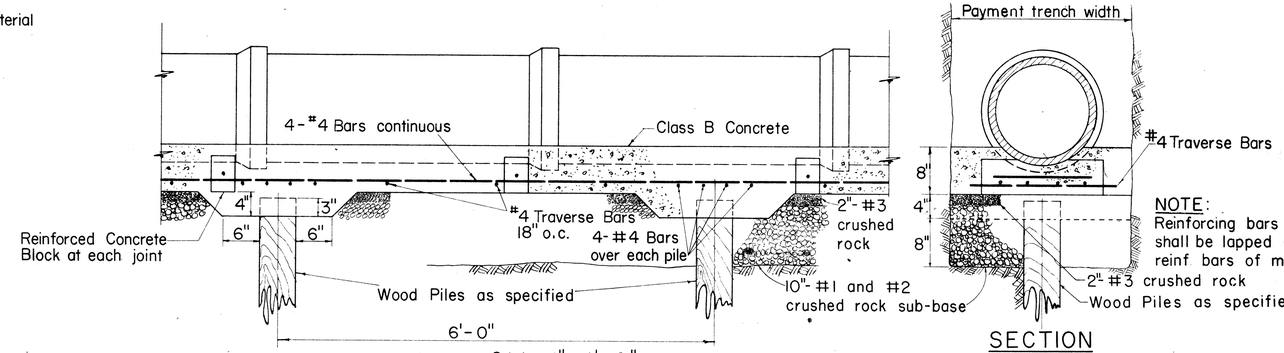

SECTION

Scale: 1" = 1'-0"

DETAIL OF REINFORCED CONCRETE CRADLE ON WOOD PILES (FOR 6, 8, 10 & 12 IN. V.C. PIPE)

DETAIL OF REINFORCED CONCRETE CRADLE WITHOUT PILES SIMILAR EXCEPT FOR WOOD PILES AND PILE CAPS

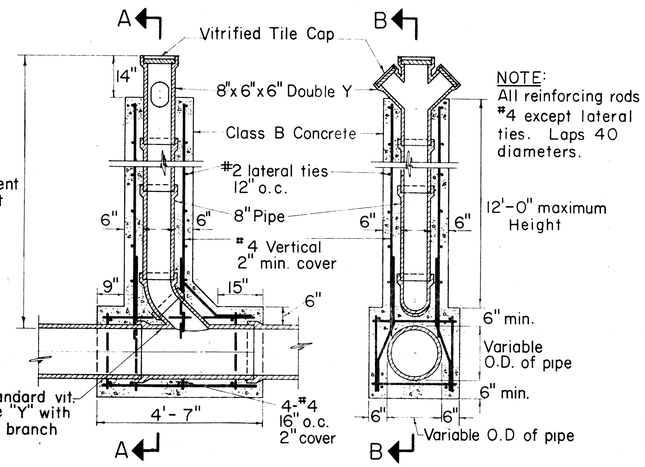

NOTE:
All reinforcing rods #4 except lateral ties. Laps 40 diameters.

DETAILS OF CHIMNEY

Scale: 1/2" = 1'-0"

Payment quantities for trench excavation, crushed rock fill, crushed rock cradle, and crushed rock sub-base shall be computed using payment trench widths as shown in the table of "Trench Widths". No payment shall be made for excess quantities resulting from trench widths greater than the payment trench widths shown.

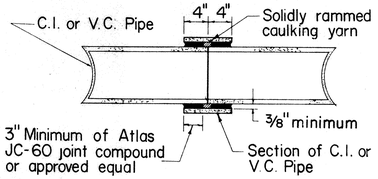

BUTT JOINT DETAIL

Scale: 1" = 1'-0"

NOTE: Permission is to be secured from property owner before construction at property line is started.
To avoid cutting of short nipple, 6" pipe may extend a maximum of 12" into the property to be served.

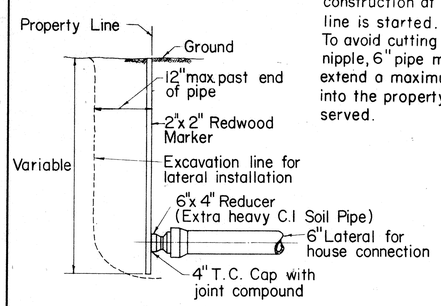

DETAIL AT PROPERTY LINE

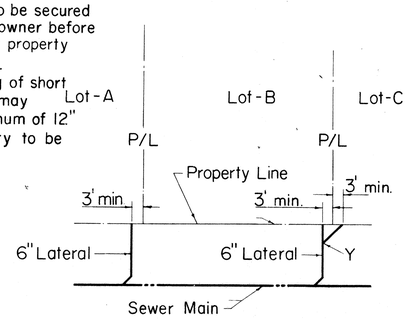

LAYOUT

CONSTRUCTION OF LATERALS

Not To Scale

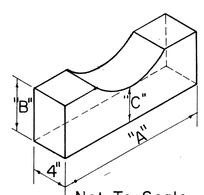

Not To Scale

DETAIL OF PRECAST CONC. PIPE BLOCK

CONCRETE BLOCK DIMENSIONS			
PIPE SIZE	"A"	"B"	"C"
6"	1'-2"	6"	3"
8"	1'-5"	6"	3"
10"	1'-7"	6"	3"
12"	1'-7"	6"	3"
15"	1'-8"	6"	4"
18"	1'-9"	6"	4"
21"	1'-10"	6"	4"
24"	1'-11"	6"	4"
27"	2'-0"	6"	4"
30"	2'-3"	6"	4"

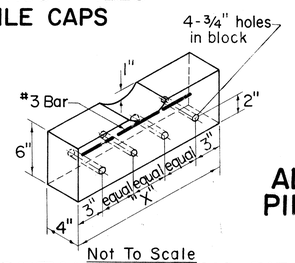

Not To Scale

DETAIL OF CONC. PIPE BLOCK FOR REINF. CRADLE

DIM. OF REINF. CONC. BLOCK	
PIPE SIZE	"X"
6"	1'-6"
8"	1'-6"
10"	1'-8"
12"	1'-8"
15"	1'-10"
18"	1'-10"
21"	1'-10"
24"	2'-0"
27"	2'-0"
30"	2'-0"

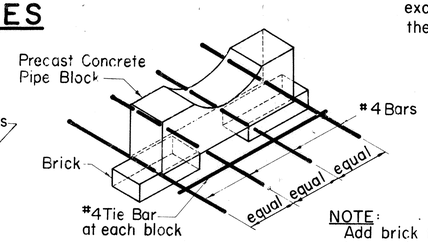

NOTE:
Add brick for larger size pipe

Not To Scale

ALTERNATE DETAIL OF CONC. PIPE BLOCK FOR REINF. CRADLE

VITRIFIED CLAY PIPE TABLE				
TRENCH WIDTHS		DIM. OF CONC. CRADLE		
PIPE SIZE	PAY. WIDTH	PIPE SIZE	"a"	WIDTH
6"	24"	6"	3"	24"
8"	24"	8"	3"	24"
10"	24"	10"	3"	24"
12"	30"	12"	3"	30"
15"	38"	15"	4"	38"
18"	41"	18"	5"	41"
21"	45"	21"	5"	45"
24"	50"	24"	6"	50"
27"	53"	27"	7"	53"
30"	57"	30"	7"	57"

APPROVED:

SEWER SYSTEM DIRECTOR, DIVISION OF SEWERS — DATE 8-19-68

STATE OF HAWAII
DEPARTMENT OF TRANSPORTATION
HIGHWAYS DIVISION
DIVISION OF SEWERS
CITY & COUNTY OF HONOLULU

STANDARD DETAILS

SEWERS - CONCRETE JACKET & MISCELLANEOUS DETAILS

Scales: As Noted — Date: 8/14/68

SHEET NO. 10 OF 17 SHEETS

27

IMPERIAL 136 K & E CO., N.Y. TRADE MARK

FED. AID DIST. NO	STATE	FED. AID PROJ. NO	FISCAL YEAR	SHEET NO	TOTAL SHEETS
HAWAII	HAWAII	I-HI-1(63):11 I-HI-1(16):11	1968	28	98

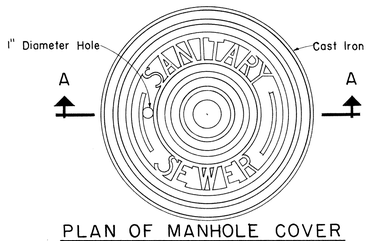

PLAN OF MANHOLE COVER
Scale: 1 1/2" = 1'-0"

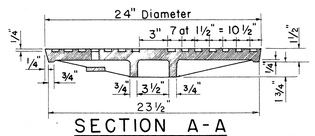

SECTION A-A
Scale: 1 1/2" = 1'-0"

NOTE:
This cover is used with the "SA" or "SD" frame

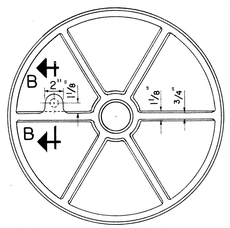

BOTTOM VIEW OF COVER
Scale: 1 1/2" = 1'-0"

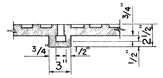

SECTION B-B

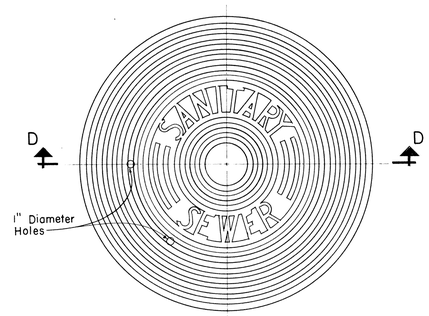

PLAN
SPECIAL MANHOLE COVER
Scale: 1 1/2" = 1'-0"

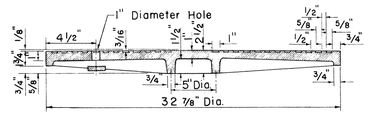

SECTION D-D
Scale: 1 1/2" = 1' 0"

Approx. Weight 260 Pounds

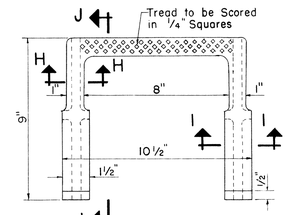

PLAN

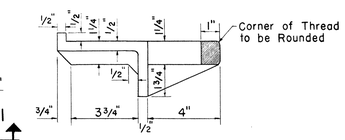

SECTION J - J

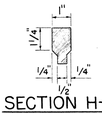

SECTION H-H

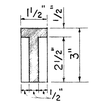

SECTION I-I

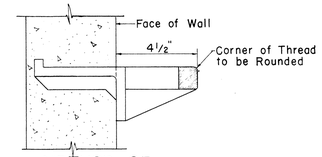

METHOD OF INSTALLATION

TYPE "SB" MANHOLE RUNGS (CAST IRON)
Scale: 3" = 1'-0"

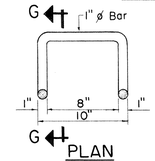

PLAN

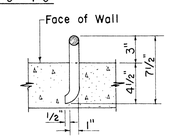

SECTION G-G

TYPE "SA" MANHOLE RUNGS (WROUGHT IRON)
Scale: 1 1/2" = 1'-0"

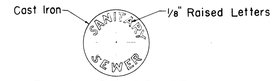

PLAN OF COVER

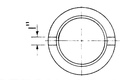

BOTTOM OF COVER

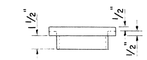

ELEVATION

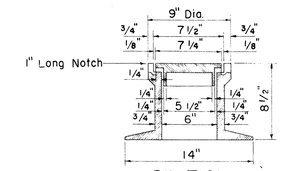

SECTION

DROP MANHOLE CHIMNEY CASTINGS
Scale: 1 1/2" = 1'-0"

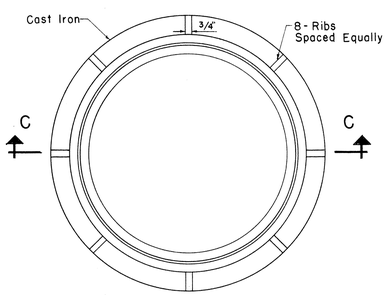

PLAN OF MANHOLE FRAME
Scale: 1 1/2" = 1'-0"

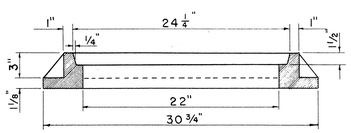

SECTION C-C
Scale: 1 1/2" = 1'-0"

TYPE "SA" SEWER MANHOLE FRAME AND COVER
Scale: 1 1/2" = 1'-0"

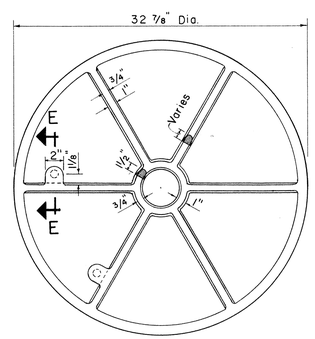

BOTTOM VIEW OF COVER
Scale: 1 1/2" = 1'-0"

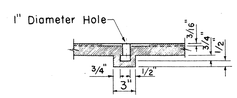

SECTION E-E
Scale: 1 1/2" = 1'-0"

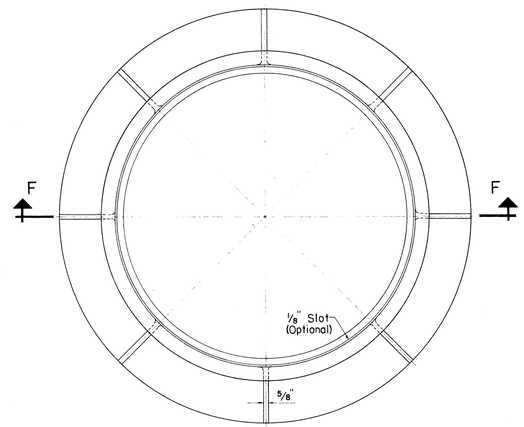

PLAN
SPECIAL MANHOLE FRAME
Scale: 1 1/2" = 1'-0"

Approx. Weight 437 Pounds

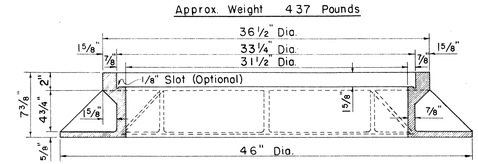

SECTION F-F
Scale: 1 1/2" = 1'-0"

TYPE "SB" SEWER MANHOLE FRAME AND COVER
Scale: 1 1/2" = 1'-0"

APPROVED:

for SEWER SYSTEM DIRECTOR, DIVISION OF SEWERS — DATE 8-19-68

STATE OF HAWAII
DEPARTMENT OF TRANSPORTATION
HIGHWAYS DIVISION
DIVISION OF SEWERS
CITY & COUNTY OF HONOLULU
STANDARD DETAILS
SEWERS - MANHOLE RUNGS, CHIMNEY CASTINGS AND FRAME AND COVER DETAILS

Scales: As Noted — Date: 8/14/68

SHEET NO. 11 OF 17 SHEETS

28

ORIGINAL PLAN		DATE
	SURVEY PLOTTED BY	
	DRAWN BY	11-9-68
	TRACED BY	" " " "
	DESIGNED BY	11-9-68
NOTE BOOK	QUANTITIES BY	
	CHECKED BY	
No.		

HEPO 125 IMPERIAL TRACING CLOTH 10-62

FED. AID DIST. NO.	STATE	FED. AID PROJ. NO.	FISCAL YEAR	SHEET NO.	TOTAL SHEETS
HAWAII	HAWAII	I-H1-1(63):11 I-H1-1(16):11	1968	29	98

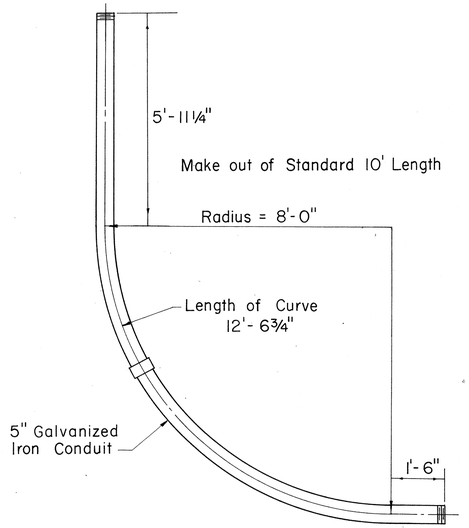

46 KV COMBINATION RISER AND BEND

(8'-0" RADIUS)

Not to Scale

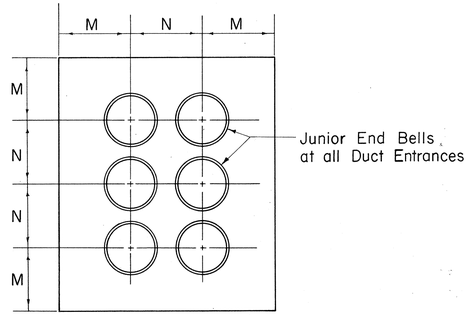

TYPICAL DUCT DETAIL AT MANHOLE WALL

Not to Scale

SIZE	M	N
3"	5"	6"
4"	5½"	7"
4½"	5½"	7½"
5"	6"	8"

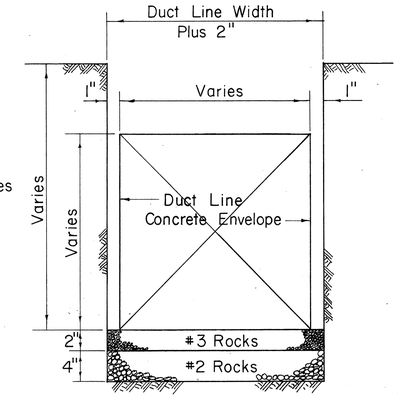

TYPICAL EXCAVATION DETAIL

Not to Scale

NOTES

1. Size of Concrete Envelope and Depth of Excavation to be determined by Project concerned.
2. Widen Trench Excavation when Forms are used.
3. Rock Foundation required only when Water is encountered.

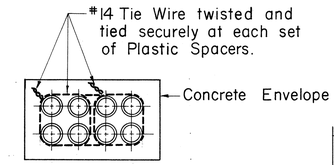

TIE WIRE DETAIL

FOR DUCT LINE MORE THAN 4 DUCTS WIDE

Not to Scale

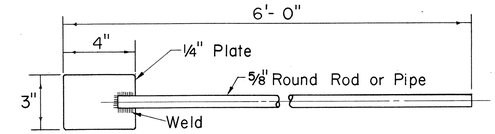

CONCRETE DUCT ENVELOPE TAMPING ROD

Scale: 3" = 1'-0"

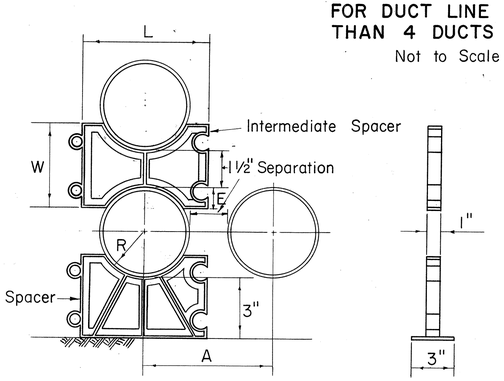

TYPICAL PLASTIC SPACERS

Not to Scale

SIZE	R	E	W	A	L
3"	1 27/32"	7/8"	3 1/4"	5 1/8"	5"
4"	2 13/32"	1 1/8"	3 3/4"	6 1/4"	6 1/8"
4 1/2"	2 23/32"	1 1/4"	4"	6 7/8"	6 3/4"
5"	3 1/16"	1 3/8"	4 1/4"	7 5/8"	7 1/2"

For 1½" Separation

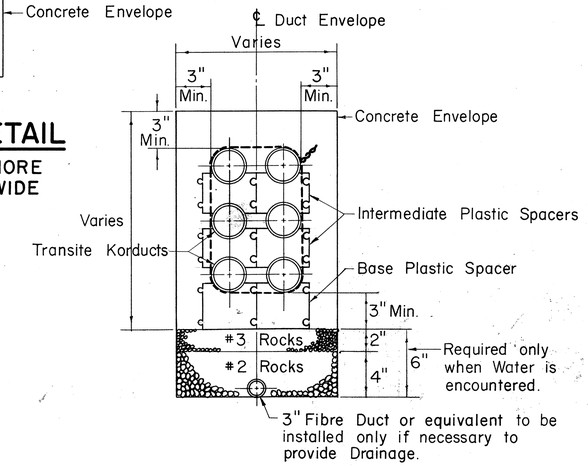

TYPICAL DUCT PLASTIC SPACERS & DRAINAGE SECTION

(6 WAY DUCT SHOWN - 3 HIGH - 2 WIDE)

Not to Scale

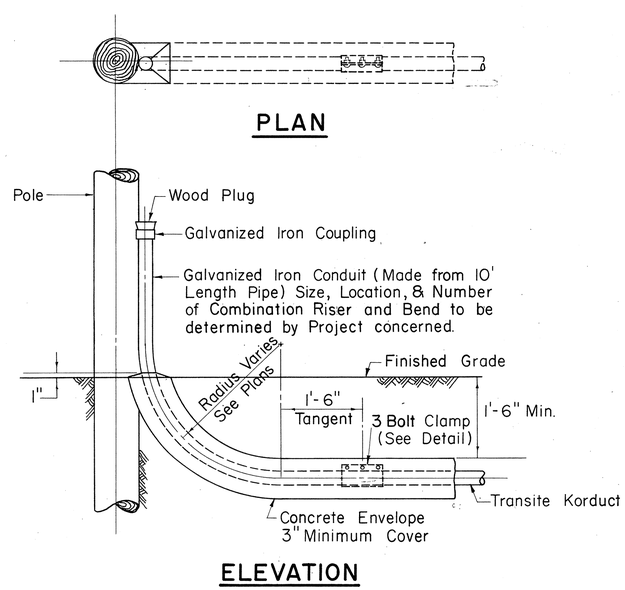

TYPICAL DETAIL COMBINATION RISER AND BEND

Scale: ¾" = 1'-0"

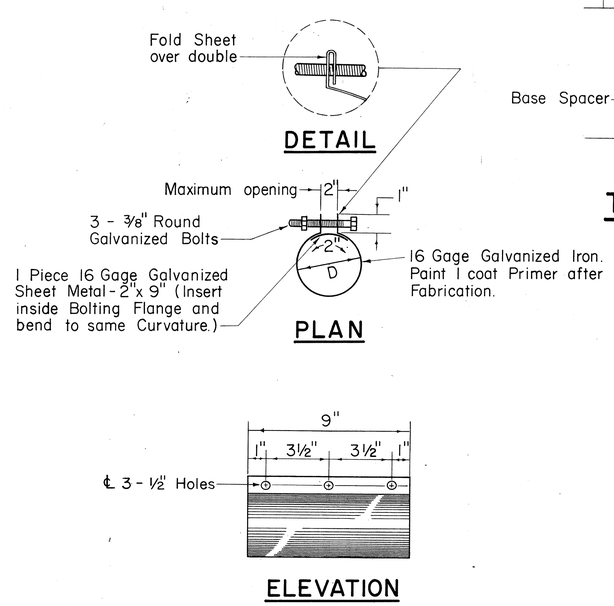

3 BOLT CLAMP DETAIL

Scale: 3" = 1'-0"

APPROVED:

A D Henderson 8-20-68

HAWAIIAN ELECTRIC CO., INC. DATE

HECo., Inc. Drawing Number	
18585	SHEET No. 1 OF 2 SHEETS

STATE OF HAWAII
DEPARTMENT OF TRANSPORTATION
HIGHWAYS DIVISION

STANDARD DETAILS

CONSTRUCTION STANDARDS
TRANSITE KORDUCTS
UNDERGROUND DUCT LINES

Scales: As Noted Date 8/14/68

SHEET NO. 12 OF 17 SHEETS

29

LIETZ 1103 ARKWRIGHT TRACING CLOTH 10-60 200P

FED. AID DIST. NO.	STATE	FED. AID PROJ. NO.	FISCAL YEAR	SHEET NO.	TOTAL SHEETS
HAWAII	HAWAII	I-HI-1(G3):11 I-HI-1(16):11	1968	30	58

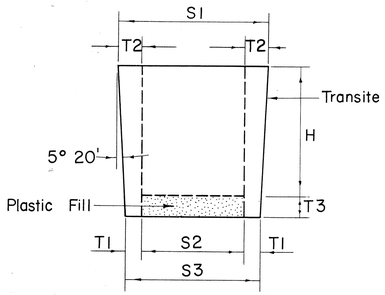

PLUGS FOR TRANSITE KORDUCTS

Not to Scale

SIZE	H	S1	S2	S3	T1	T2	T3
3"	4"	$3\frac{3}{8}$"	2"	$2\frac{5}{8}$"	$\frac{5}{16}$"	$\frac{11}{16}$"	$\frac{3}{4}$"
4"	$4\frac{1}{2}$"	$4\frac{27}{64}$"	$2\frac{3}{4}$"	$3\frac{37}{64}$"	$\frac{13}{32}$"	$\frac{27}{32}$"	$\frac{3}{4}$"
$4\frac{1}{2}$"	$4\frac{1}{2}$"	$4\frac{59}{64}$"	3"	$4\frac{5}{64}$"	$\frac{35}{64}$"	$\frac{31}{32}$"	$\frac{3}{4}$"
5"	$4\frac{1}{2}$"	$5\frac{27}{64}$"	$3\frac{1}{2}$"	$4\frac{37}{64}$"	$\frac{35}{64}$"	$\frac{31}{32}$"	$\frac{3}{4}$"

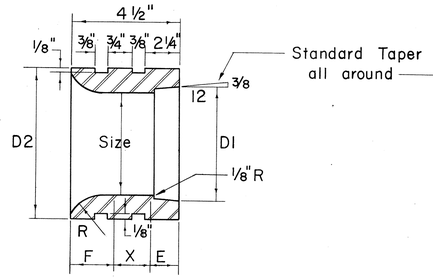

JUNIOR END BELLS

Not to Scale

SIZE	D1	D2	F	X	E	R
3"	$3\frac{25}{64}$"	$4\frac{1}{2}$"	$1\frac{11}{32}$"	$1\frac{29}{32}$"	$1\frac{1}{4}$"	$1\frac{3}{4}$"
4"	$4\frac{25}{64}$"	$5\frac{3}{4}$"	$1\frac{9}{16}$"	$1\frac{9}{16}$"	$1\frac{3}{8}$"	2"
$4\frac{1}{2}$"	$4\frac{57}{64}$"	$6\frac{1}{4}$"	$1\frac{9}{16}$"	$1\frac{9}{16}$"	$1\frac{3}{8}$"	2"
5"	$5\frac{29}{64}$"	7"	$1\frac{9}{16}$"	$1\frac{7}{16}$"	$1\frac{1}{2}$"	2"

Note "X"

Provide one set of Spacers
(a) 10 Ft. straight run for 4 Ducts high or less.
(b) 5 Ft. straight run for 5 Ducts high or more.

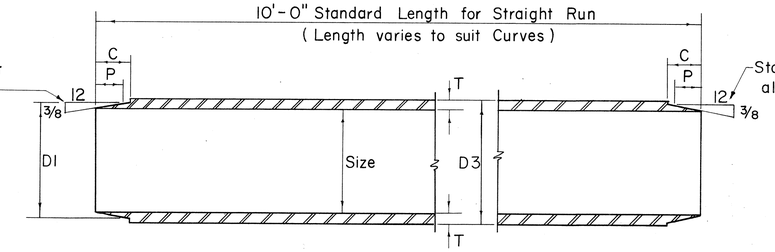

TRANSITE KORDUCTS

Not to Scale

SIZE	D1	D3	C	P	T
3"	$3\frac{25}{64}$"	$3\frac{35}{64}$"	$1\frac{1}{8}$"	$\frac{7}{8}$"	$\frac{17}{64}$"
4"	$4\frac{25}{64}$"	$4\frac{35}{64}$"	$1\frac{1}{4}$"	1"	$\frac{17}{64}$"
$4\frac{1}{2}$"	$4\frac{57}{64}$"	$5\frac{3}{64}$"	$1\frac{1}{4}$"	1"	$\frac{17}{64}$"
5"	$5\frac{29}{64}$"	$5\frac{39}{64}$"	$1\frac{25}{64}$"	$1\frac{1}{8}$"	$\frac{19}{64}$"

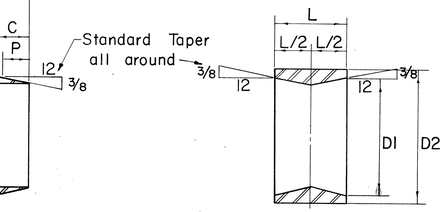

TAPERED COUPLINGS

Not to Scale

SIZE	D1	D2	L
3"	$3\frac{25}{32}$"	$4\frac{11}{64}$"	$2\frac{1}{4}$"
4"	$4\frac{25}{64}$"	$5\frac{3}{16}$"	$2\frac{1}{2}$"
$4\frac{1}{2}$"	$4\frac{57}{64}$"	$5\frac{49}{64}$"	$2\frac{1}{2}$"
5"	$5\frac{29}{64}$"	$6\frac{21}{64}$"	$2\frac{3}{4}$"

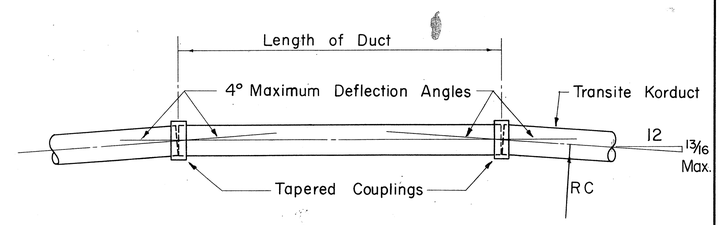

METHOD OF FORMING CURVES

Not to Scale

MINIMUM RADIUS TO FORM CURVES										
LENGTH OF DUCT	1'-0"	1'-6"	2'-0"	2'-6"	3'-0"	3'-6"	4'-0"	4'-6"	5'-0"	5'-6"
MIN. RAD. RC	14'-4"	21'-6"	28'-8"	35'-10"	42'-11"	50'-1"	57'-3"	64'-5"	71'-7"	78'-9"
LENGTH OF DUCT	6'-0"	6'-6"	7'-0"	7'-6"	8'-0"	8'-6"	9'-0"	9'-6"	10'-0"	
MIN. RAD. RC	85'-11"	93'-1"	100'-3"	107'-5"	114'-7"	121'-8"	128'-10"	136'-0"	143'-2"	

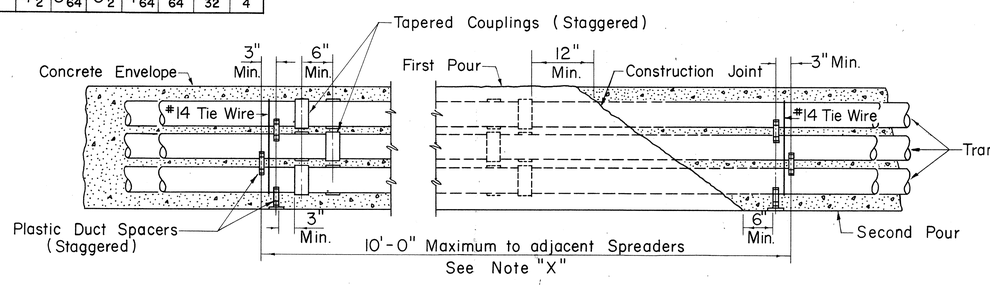

TYPICAL DUCT ENVELOPE ELEVATION

(6 WAY DUCT LINE SHOWN)

Not to Scale

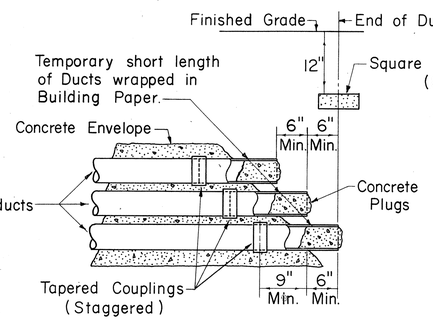

TYPICAL STUB OUT DETAIL

Not to Scale

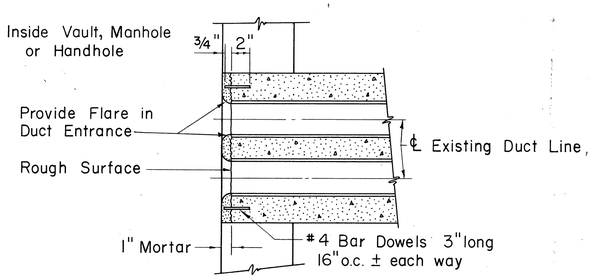

DUCT LINE ENTRANCE AT EXISTING DUCT LINE

Scale: 1½" = 1'-0"

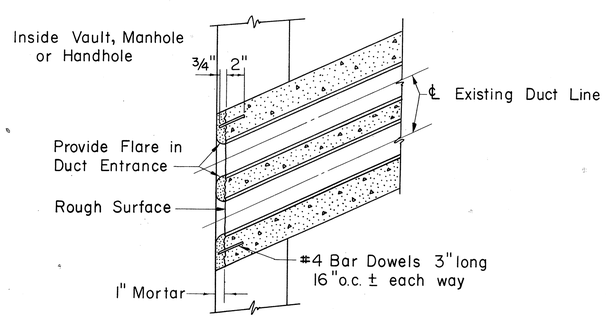

DUCT LINE DIAGONAL ENTRANCE

Scale: 1½" = 1'-0".

APPROVED:

A S Henderson 8-20-68

HAWAIIAN ELECTRIC CO., INC. DATE

HECo., Inc. Drawing Number

18585

SHEET No. 2 OF 2 SHEETS

STATE OF HAWAII
DEPARTMENT OF TRANSPORTATION
HIGHWAYS DIVISION

STANDARD DETAILS

CONSTRUCTION STANDARDS
TRANSITE KORDUCTS
UNDERGROUND DUCT LINES

Scales: As Noted

Date 8/14/68

SHEET NO. 13 OF 17 SHEETS

33 (1)

LIETZ 1103 ARKWRIGHT TRACING CLOTH 10-60 200P

FED. AID DIST. NO.	STATE	FED. AID PROJ. NO.	FISCAL YEAR	SHEET NO.	TOTAL SHEETS
HAWAII	HAWAII	I-H1-1(69);11 I-H1-1(16);11	1968	31	88

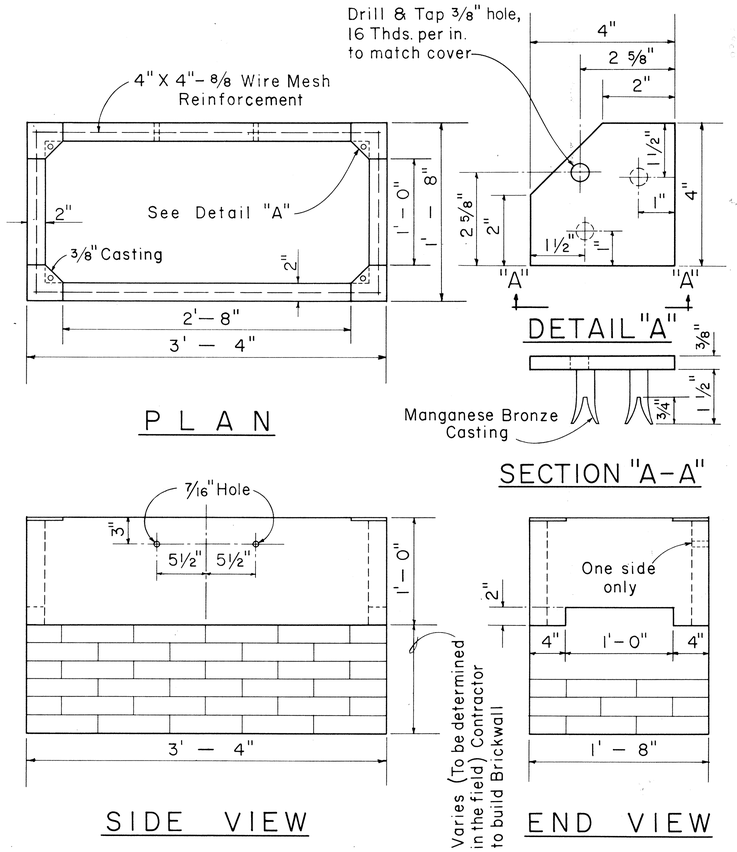

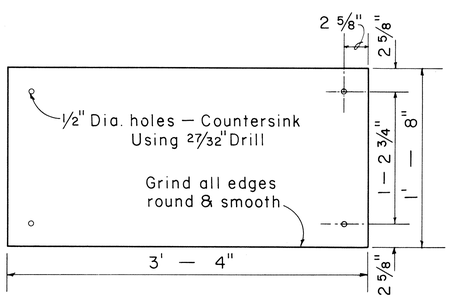

NOTES:
Use 3/8" Plate for driveways.
Concrete Box 225 Lbs.
1/4" Checker Plate 62 Lbs.
Secure cover with 3/8" x 1" flat head brass machine screws.

1/4" CHECKER PLATE COVER

(Hot dip galvanize checkered plate after drilling, countersinking, and grinding edge)

1'-4" X 3'-0" CONCRETE SERVICE BOX

Scale: 1 1/2" = 1'-0"

011250

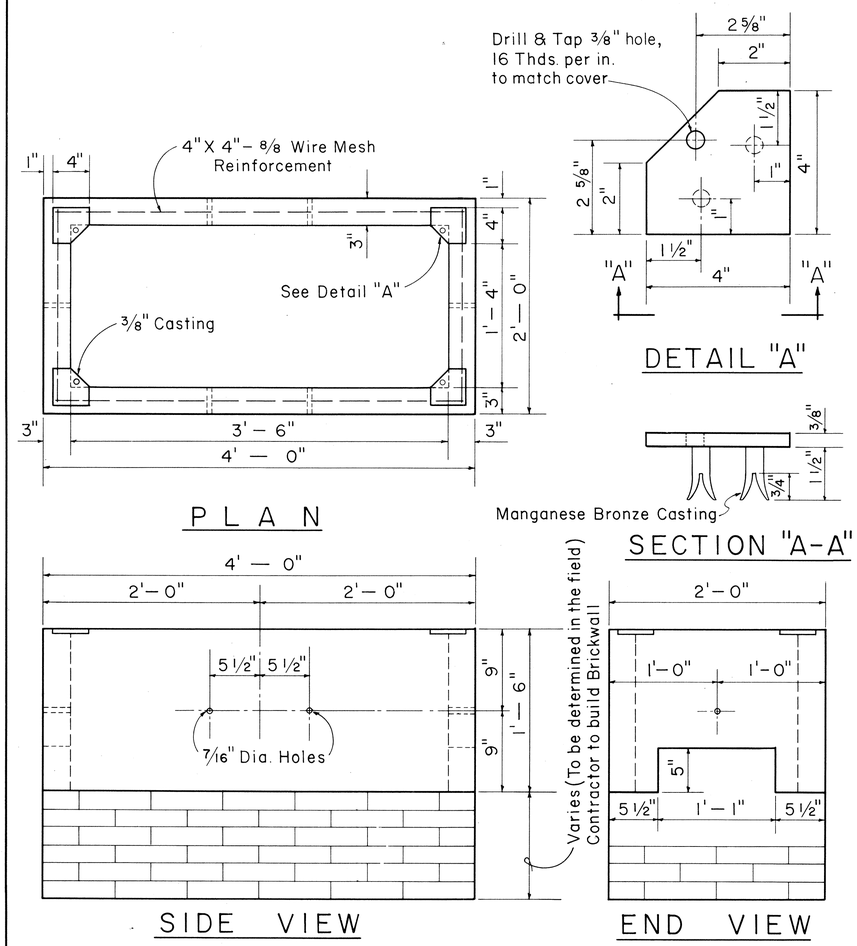

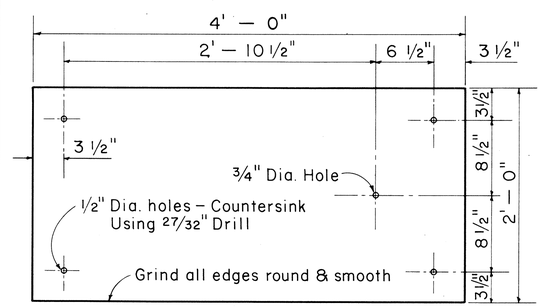

NOTES:
Use 3/8" Plate for driveway.
Concrete Box 575 Lbs.
1/4" Checker Plate 130 Lbs.
Secure cover with 3/8" x 1" flat head brass machine screws.

1/4" CHECKER PLATE COVER

(Hot dip galvanize checkered plate after drilling, countersinking, and grinding edge)

1'-6" X 3'-6" CONCRETE SERVICE BOX

Scale: 1 1/2" = 1'-0"

011255

CREOSOTED DOUGLAS FIR & YELLOW PINE POLE DATA

LENGTH IN FEET	CLASS	APPROX. MINIMUM DIMENSIONS (INCHES) AT TOP DIA.	AT TOP CIR.	6' FROM BUTT DIA.	6' FROM BUTT CIR.	AVERAGE WEIGHT (LBS.) DOUGLAS FIR	POLE SETTING DEPTH (FT.) IN SOIL	IN ROCK	BREAKING LOAD 2'-0" BELOW TOP OF POLE (LBS.)
25	5	6.04	19	8.26	26	525	4.5	3	1900
30	3	7.32	23	10.32	32.5	810	5	3.5	3000
	5	6.04	19	8.90	28	600	5	3.5	1900
35	2	7.96	25	12.23	37.5	1260	5	3.5	3700
	5	6.04	19	9.55	30	770	5	3.5	1900
40	3	7.32	23	11.77	37	1320	5.5	3.5	3000
45	2	7.96	25	13.20	41.5	1845	6	4.	3700
	3	7.32	23	12.25	38.5	1575	6	4	3000
50	2	7.96	25	13.70	43.	2150	6.5	4	3700
	3	7.32	23	12.70	40	1850	6.5	4	3000
55	1	8.59	27	15.11	47.5	2860	7	4.5	4500
	2	7.96	25	14.15	44.5	2475	7	4.5	3700
	3	7.32	23	13.20	41.5	2145	7	4.5	3000
60	1	8.59	27	15.75	49.5	3360	7	4.5	4500
	2	7.96	25	14.62	46	2820	7	4.5	3700
65	1	8.59	27	16.20	51	3835	7.5	5	4500
	2	7.96	25	15.11	47.5	3250	7.5	5	3700
70	1	8.59	27	16.70	52.5	4340	7.5	5	4500
	2	7.96	25	15.60	49	3640	7.5	5	3700
75	1	8.59	27	17.20	54	4800	8	5.5	4500
	2	7.96	25	16.05	50.5	4050	8	5.5	3700
80	1	8.59	27	17.50	55	5240	8	6	4500
	2	7.96	25	16.40	51.5	4400	8	6	3700
85	1	8.59	27	18.00	56.5	5780	8.5	6.5	4500
	2	7.96	25	16.88	53	4930	8.5	6.5	3700
90	1	8.59	27	18.30	57.5	6300	8.5	6.5	4500
	2	7.96	25	17.20	54	5400	8.5	6.5	3700

NOTE:
The ultimate fiber stress for creosoted Southern Yellow Pine & Douglas Fir is 7,400 Lbs. per square inch.

Weights are for untreated poles. Add 5% as estimate of added weight of creosote treatment.

REFERENCES:
American Standards Association 05.4-1941, 05.6-1945.
Standard Handbook for Electrical Engineers, Eighth Edition
H. E. Co. Specification for Poles.

WOOD POLE DATA

APPROVED:
A D Henderson 8-20-68
HAWAIIAN ELECTRIC Co., Inc. DATE
PR

STATE OF HAWAII
DEPARTMENT OF TRANSPORTATION
HIGHWAYS DIVISION
STANDARD DETAILS
H. E. Co. AND H. T. Co.
SERVICE BOX DETAILS
AND WOOD POLE DATA

Scales: As Noted Date 8/14/68

SHEET NO. 14 OF 17 SHEETS

ORIGINAL PLAN | NOTE BOOK No. | SURVEY PLOTTED BY | DRAWN BY | TRACED BY | DESIGNED BY | QUANTITIES BY | CHECKED BY | DATE

LIETZ 1103 ARKWRIGHT TRACING CLOTH 10-60 200P

FED. AID DIST. NO.	STATE	FED. AID PROJ. NO.	FISCAL YEAR	SHEET NO.	TOTAL SHEETS
HAWAII	HAWAII	I-H1-1(63):11 I-H1-1(16):11	1968	32	08

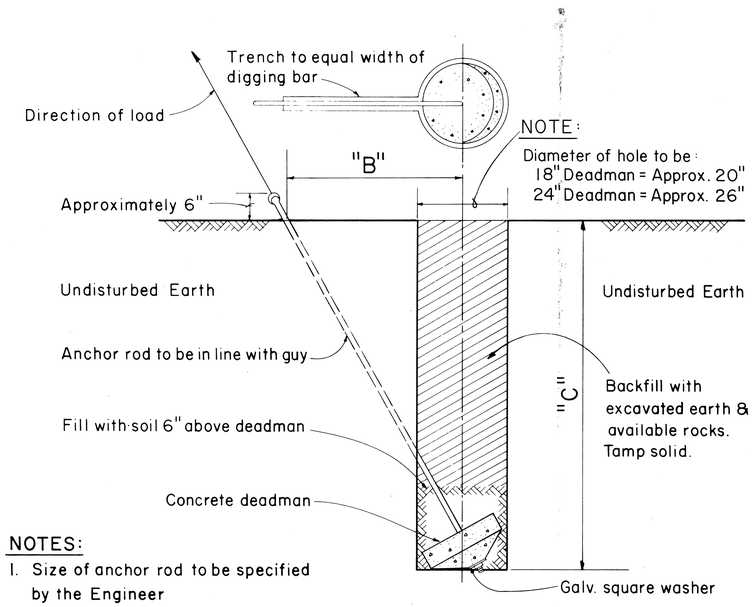

NOTES:
1. Size of anchor rod to be specified by the Engineer
2. Use Anchoring Data.

GUY ANCHOR DEADMAN

Scale: 3/4" = 1' – 0"

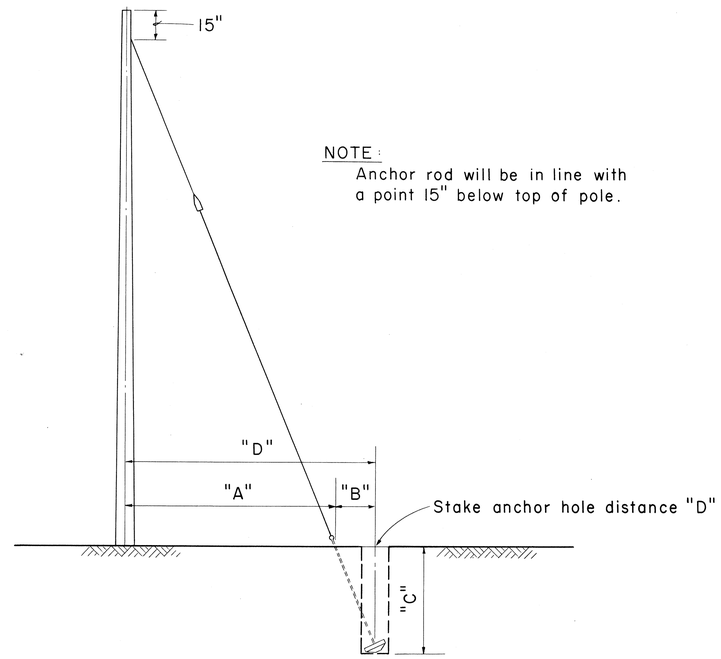

Not to Scale

FOR 25', & 30' POLES WITH 8'-0" ANCHOR RODS				
"A"	"B"	"C"		"D" = ("A" + "B")
LEAD-ANCHOR ROD TO ℄ OF POLE	ANCHOR ROD TO ℄ OF HOLE	VERTICAL DEPTH		TOTAL DISTANCE POLE TO HOLE
		18" D.M.	24" D.M.	
5'-0"	1'-8"	7'-1"	7'-4"	6'-8"
10'-0"	3'-0"	6'-7"	7'-0"	13'-0"
15'-0"	4'-0"	6'-1"	6'-6"	19'-0"
20'-0"	4'-8"	5'-6"	5'-10"	24'-8"
25'-0"	5'-2"	4'-11"	5'-4"	30'-2"
FOR 35' THRU 70' POLES WITH 8'-0" ANCHOR RODS				
5'-0"	1'-0"	7'-3"	7'-4"	6'-0"
10'-0"	1'-11"	7'-1"	7'-3"	11'-11"
15'-0"	2'-8"	6'-9"	7'-1"	17'-8"
20'-0"	3'-3"	6'-6"	6'-10"	23'-3"
25'-0	3'-10"	6'-2"	6'-7"	28'-10"
FOR 40' THRU 70' POLES WITH 1 1/4" x 10'-0" ANCHOR RODS				
5'-0"	1'-7"		9'-4"	6'-7"
10'-0"	3'-0"		9'-0"	13'-0"
15'-0"	4'-2"		8'-6"	19'-2"
20'-0"	5'-3"		7'-11"	25'-3"
25'-0"	6'-2"		7'-3"	31'-2"

D. M. = Deadman

TABLE 2 ANCHOR ROD - ANCHOR SLUG - SQUARE WASHER COMBINATION

H.E. CODE NO.	ANCHOR ROD	WORKING TENSION 1/2 ULT (LBS.)	H.E. CODE NO.	CONC. ANC. (IN.)	H.E. CODE NO.	WASHER SIZE	QTY.
617	5/8" x 8'-0" Steel	8,000	518	18	2320	4" x 4" x 3/16"	2
615	5/8" x 8'-0" Cu Cov Stl	9,250	518	18	**	3" x 3" x 1/8"	2
618	3/4" x 8'-0" Steel	11,500	518	18	2330	6" x 6" x 3/8"	1
619	1" x 8'-0" Steel	18,000	524	24	2331	6" x 6" x 1/2"	1
616	1" x 8'-0" Cu Cov Stl	22,500	524	24	**	4" x 4" x 3/16"	2
613	1 1/4" x 10'-0" Steel	29,000	524	24	2330	6" x 6" x 3/8"	2

** Use bronze square washers included in anchor rod assembly on copper covered steel (Cu Cov Stl) anchor rods.

ANCHORING DATA

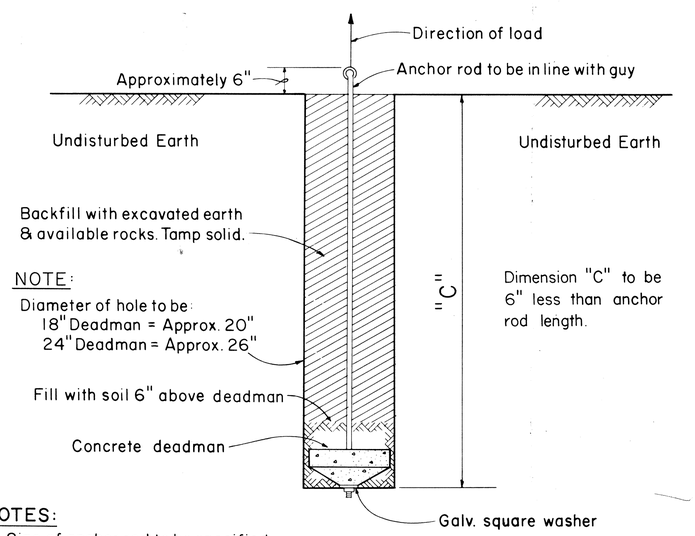

NOTES:
1. Size of anchor rod to be specified by the Engineer.
2. Use Anchoring Data.

SIDE – WALK ANCHOR

Scale: 3/4" = 1' – 0"

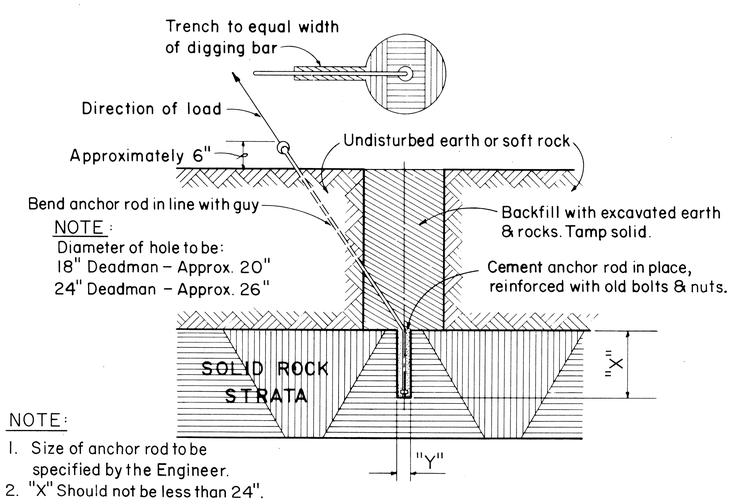

NOTE:
1. Size of anchor rod to be specified by the Engineer.
2. "X" Should not be less than 24". If "X" is less than 24" complete hole & install anchor.
3. "Y" 5/8" Anchor rod drill 2" hole
   3/4" Anchor rod drill 2" hole
   1" Anchor rod drill 2 1/2" hole
   1 1/4" Anchor rod drill 3" hole
4. Use Anchoring Data.

ROCK ANCHOR

Not to Scale

APPROVED:

A D Henderson 8-20-69
HAWAIIAN ELECTRIC Co., Inc. DATE

STATE OF HAWAII
DEPARTMENT OF TRANSPORTATION
HIGHWAYS DIVISION

STANDARD DETAILS
H.E. Co. AND H.T. Co.
ANCHOR DETAILS AND ANCHORING DATA

Scales: As Noted Date 9/11/68

SHEET No. 15 OF 17 SHEETS

FED. ROAD DIST. NO.	STATE	FED. AID PROJ. NO.	FISCAL YEAR	SHEET NO.	TOTAL SHEETS
HAWAII	HAW.	I-H1-1(69):11 I-H1-1(16):11	1968	33	98

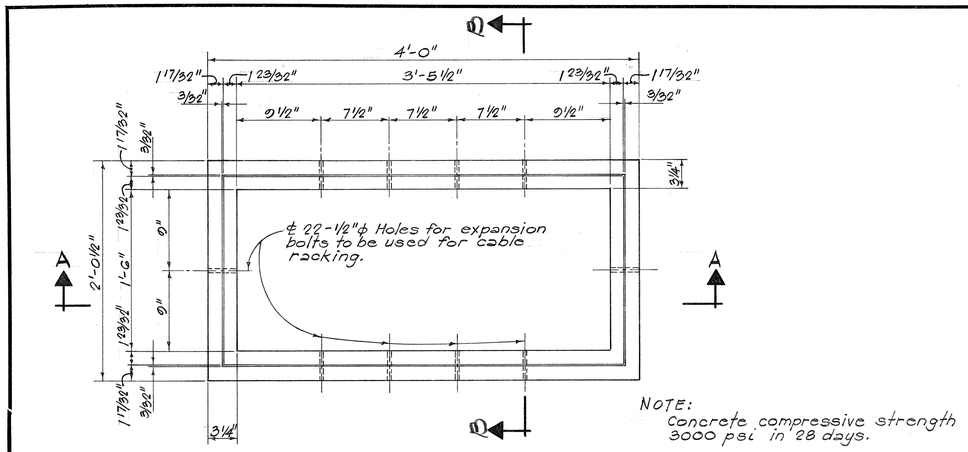

NOTE:
Concrete compressive strength 3000 psi in 28 days.

PLAN

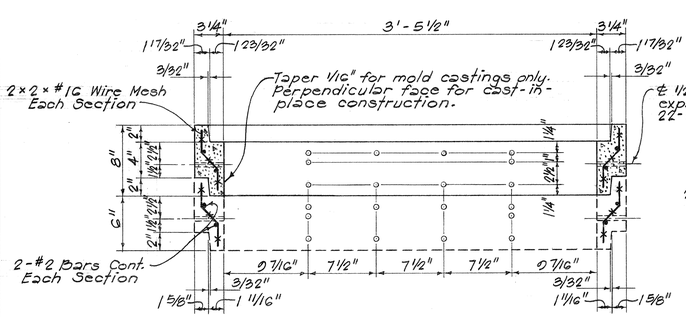

SECTION "A-A"

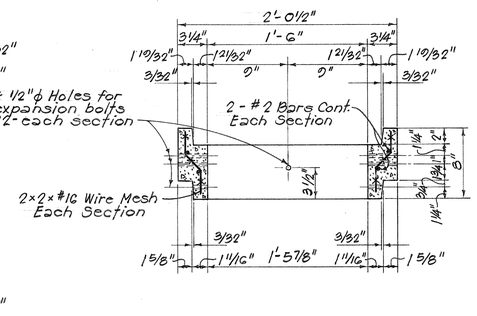

SECTION "B-B"

PULLBOX #435 T-B
Scale: 1 1/2" = 1'-0"

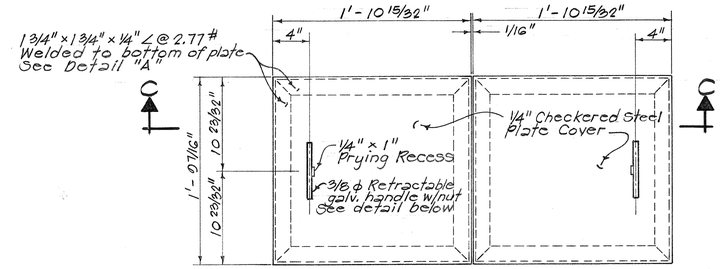

PLAN
Scale: 1/2" = 1'-0"

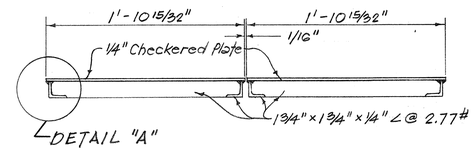

SECTION "C-C"
Scale: 1/2" = 1'-0"

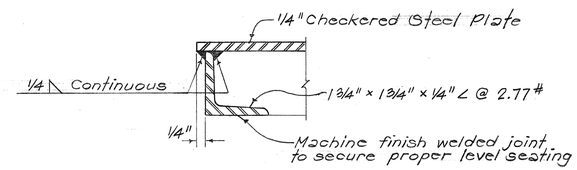

DETAIL "A"
Scale: 6" = 1'-0"

NOTE:
After fabrication of cover, apply 1 coat of silver paint to both sides.

CHECKERED STEEL PLATE COVERS
(FOR LIGHT LOADING AREAS)

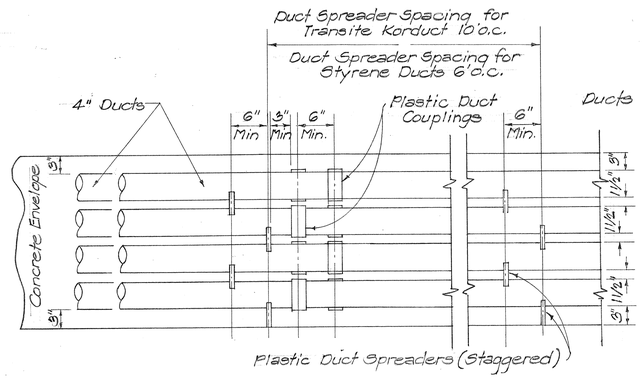

TYPICAL DUCT ENVELOPE ELEVATION
ARRANGEMENT OF COUPLING & PLASTIC SPACERS
Scale: 1" = 1'-0"

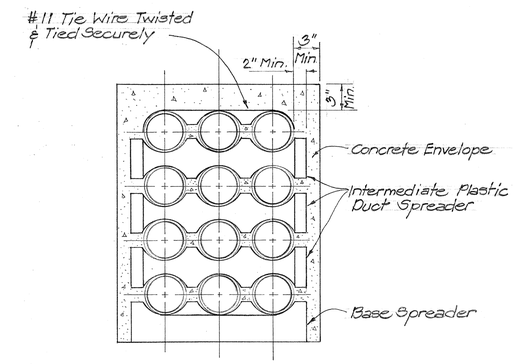

SECTION SHOWING SPACERS

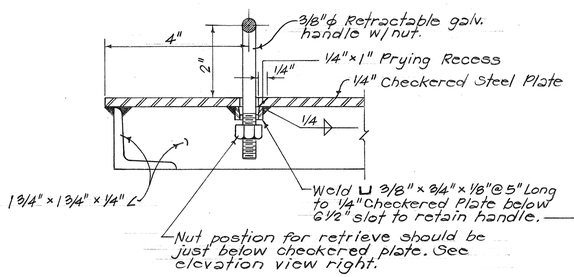

SECTION - RETRIEVE POSITION

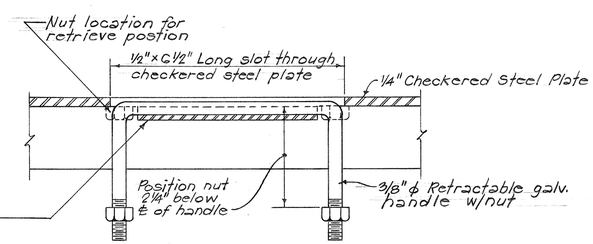

ELEVATION - AT REST POSITION

RETRACTABLE HANDLE
Scale: 6" = 1'-0"

APPROVED:

Hawaiian Tel. Co.

8-20-68
Date

STATE OF HAWAII
DEPARTMENT OF TRANSPORTATION
HIGHWAYS DIVISION

LARGE PULLBOX NO. 435 T-B
TELEPHONE

INTERSTATE ROUTE H-1
PROV. NOS. I-H1-1(69):11
I-H1-1(16):11
Scale: 1" = 50'
Date: 8/14/68

SHEET No. 16 OF 17 SHEETS

ORIGINAL PLAN	SURVEY PLOTTED BY	DATE
	DRAWN BY	"
	TRACED BY	"
NOTE BOOK	DESIGNED BY	"
	QUANTITIES BY	"
No.	CHECKED BY	"

PRINTED ON NO. 1000H CLEARPRINT

FED. ROAD DIST. NO.	STATE	FED. AID PROJ. NO.	FISCAL YEAR	SHEET NO.	TOTAL SHEETS
HAWAII	HAW.	I-HI-1(69):11 I-HI-1(16):11	1968	31	08

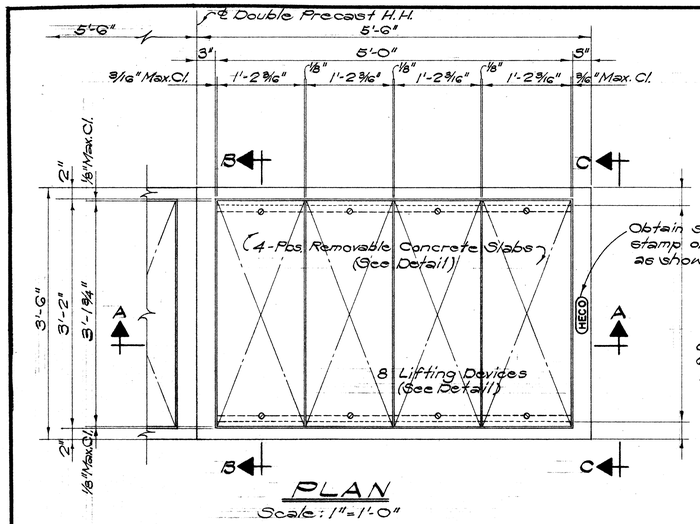

PLAN

Scale: 1" = 1'-0"

** NOTE:
When installing this type handhole on highway projects, provide an additional 6" to the dimensions identified with a double asterisk (**) to maintain the required 2 ft. minimum duct cover.

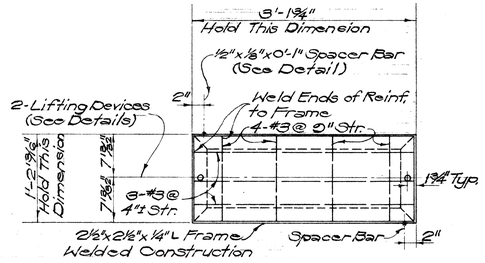

PLAN

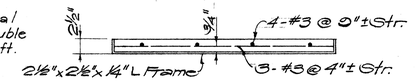

SECTION

REMOVABLE CONCRETE SLAB

Scale: 1" = 1'-0"

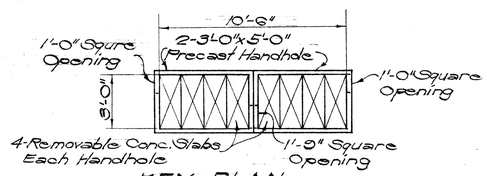

KEY PLAN

Scale: 1/4" = 1'-0"

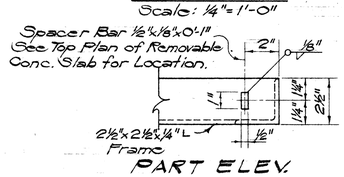

PART ELEV.

SPACER BAR DETAIL

Scale: 3" = 1'-0"

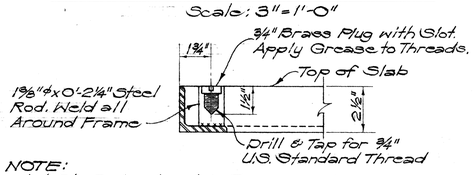

NOTE:
Hot Dip Galvanized L Frame After Fabrication.

LIFTING DEVICE DETAIL

Scale: 3" = 1'-0"

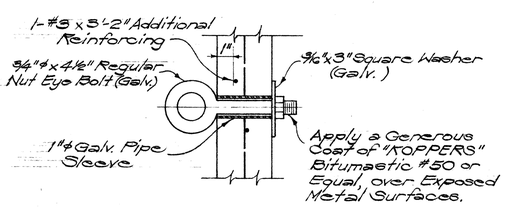

PULLING EYE DETAIL

Scale: 3" = 1'-0"

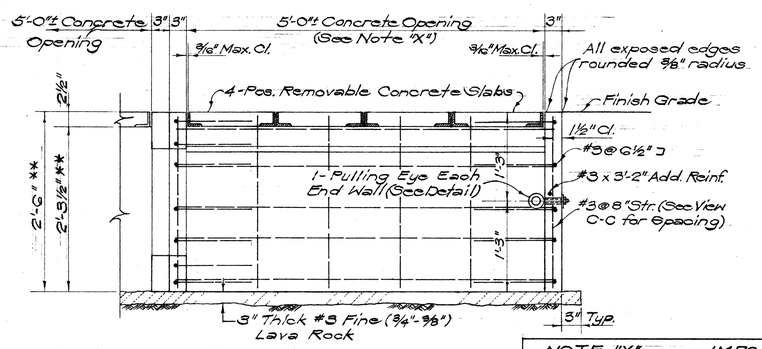

SECTION A-A

Scale: 1" = 1'-0"

NOTE "X" IMPORTANT
Maximum clearances between removable concrete cover slabs and concrete opening at the supports must be kept. Concrete Contractor shall measure cover slab steel frame after fabrication to obtain proper clearances. Any variation in clearances shall be corrected to the satisfaction of the Engineer at Contractor's expense.

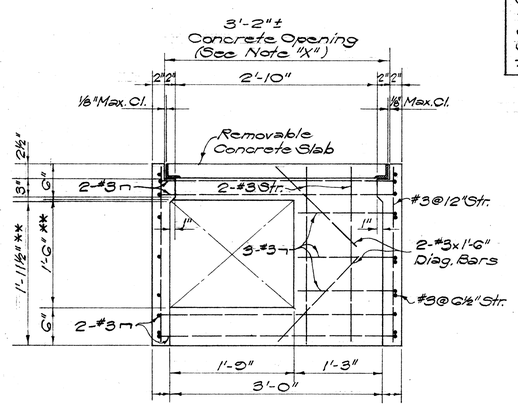

SECTION B-B

Scale: 1" = 1'-0"

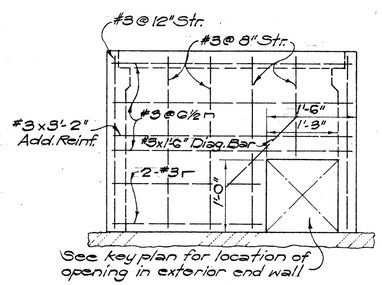

VIEW C-C

Scale: 1" = 1'-0"

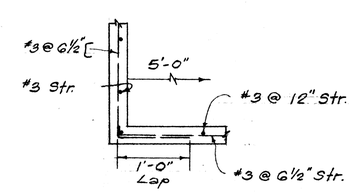

PLAN

CORNER REINFORCEMENT

Scale: 1" = 1'-0"

GENERAL NOTES

1. The general conditions of Specification Sht. 16103 shall govern throughout the entire work.
2. Concrete shall be Class A-1 conforming to the requirements of Section 47 of the special provisions.
3. CONCRETE FINISH:
   Top of Handhole - Wood floated (Sidewalk finish) according to Division of Highways, State of Hawaii, or Division of Engineering, City & County of Honolulu specifications which ever the case may be unless otherwise directed.

   Exposed Wall Surfaces, & Edges - Smooth and free from defects.
4. REINFORCING:
   Round deformed bars, new billet stock intermediate grade A.S.T.M. A15. All hooked bars shall have A.C.I. standard hook unless otherwise shown.
5. FORMS:
   Form handhole to size & shape as shown. Exterior face of handhole walls shall be formed except:
   A) Excavation in solid material such as coral or rock - neat cut - no forms required.
   B) Excavation in solid materials other than coral & rock - lining such as salvaged corrugated iron, canec, etc. shall be used.
6. PULLING EYE:
   For location & number required, see duct entrance plan of project concerned.
7. Slope top of handhole to match existing sidewalk grade. In installations outside of sidewalk areas project top of handhole 1" above grade.
8. FINISH STEEL WORK:
   Angle frames for removable concrete slabs, lifting device & pulling eye shall be hot dip galvanized after fabrication.
9. EXCAVATION:
   Excavate for handhole to accurate alignment grades & dimensions as shown on drawing. All excavation must be approved by the Engineering Department The Hawaiian Electric Co., Inc., before installing precast handhole. All excess cut shall be backfilled with concrete or crushed lava rock.
10. BACKFILL:
    Remove all debris before backfilling. Backfill in accordance with latest specifications of and subject to approval of Division of Highways, State of Hawaii or Division of Engineering, City & County of Honolulu whichever the case may be unless otherwise directed.
11. For duct line construction standards, see H.E.Co. Dwg. U-18585, Revision #2 and Specifications Sheet U-18585A.
12. DUCTS:
    For size, location & number required see duct entrance plan of project concerned.
13. ALL MATERIALS SHALL BE NEW AND SHALL BE MANUFACTURED IN THE UNITED STATES OF AMERICA.
14. This handhole to be used in areas not subject to vehicular traffic.

APPROVED:

A H Henderson
Hawaiian Elec. Co.

8-20-68
Date

STATE OF HAWAII
DEPARTMENT OF TRANSPORTATION
HIGHWAYS DIVISION

DOUBLE PRECAST HANDHOLE
(# C-2378)
ELECTRICAL

INTERSTATE ROUTE H-1
PROJ. NOS. I-HI-1(69):11
I-HI-1(16):11

Scale: As Shown Date 8/14/68

SHEET No. 17 OF 17 SHEETS

ORIGINAL PLAN	SURVEY PLOTTED BY	DATE
	DRAWN BY	
	TRACED BY	
	DESIGNED BY	
NOTE BOOK	QUANTITIES BY	
No.	CHECKED BY	

PRINTED ON NO. 1000H CLEARPRINT