FED. ROAD DIST. NO.	STATE	FED. AID PROJ. NO.	FISCAL YEAR	SHEET NO.	TOTAL SHEETS
HAWAII	HAW.	I-HI-1(42)	1968	44	50

SCOPE OF WORK:

Realignment of the Railroad Right of Way Access Road consists of light grading, compacting and constructing embankment as shown on the plans or as directed by the Engineer.

NOTES:

1. The new horizontal alignment of the Railroad Right of Way Access Road shall follow the alignment of the piers as shown on the plans.
2. The profile of the new Railroad Right of Way Access Road shall follow the existing ground and smooth riding connections shall be provided at both ends.

NOTE:

WORK IN NAVY'S RAILROAD RIGHT-OF-WAY

1. The Contractor shall contact Mr. Mel Miller of Navy Supply Center, telephone 43-57128 prior to commencement of any construction.
2. The Contractor shall contact Mr. L. Peschia, of Navy Public Works Center, telephone 43-43134 and arrange to have the existing 36-inch Navy water main located by Navy forces prior to excavating for duct line installation.
   The Contractor shall pay the Navy for the cost of locating the existing Navy water main by Navy forces (estimated at $100.99) and this amount shall not be reimbursed directly to the Contractor but shall be considered as incidental to the various contract pay items in the proposal.
3. The Contractor shall protect from damage all Navy and Standard Oil Co. utility lines at all times during construction.

LEGEND FOR CONDUIT	
SYMBOL	CONDUIT SIZE
F	4"
H	5"

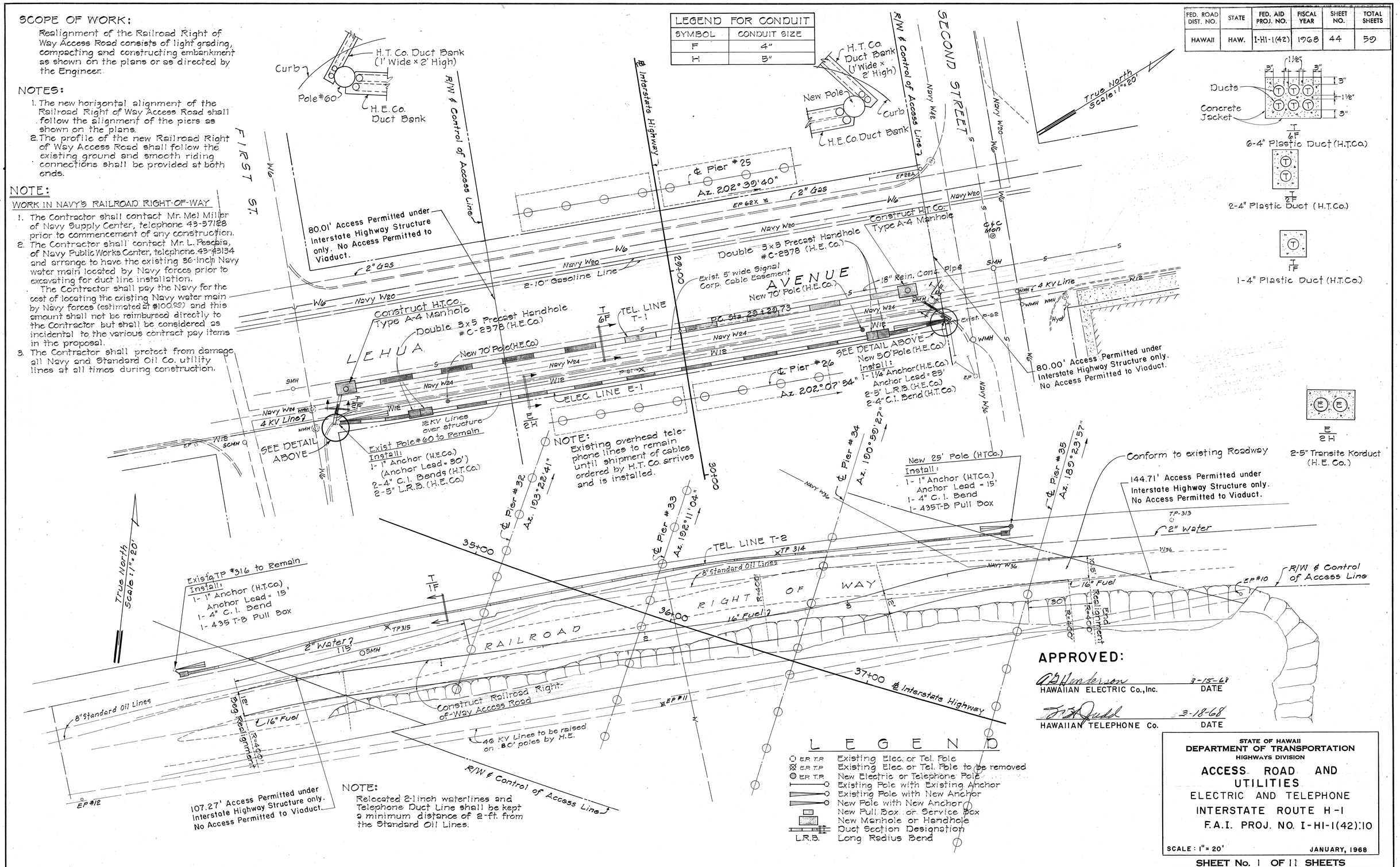

APPROVED:

A B Henderson — 3-15-68
HAWAIIAN ELECTRIC Co., Inc. — DATE

T F Judd — 3-18-68
HAWAIIAN TELEPHONE Co. — DATE

STATE OF HAWAII
DEPARTMENT OF TRANSPORTATION
HIGHWAYS DIVISION

ACCESS ROAD AND UTILITIES

ELECTRIC AND TELEPHONE
INTERSTATE ROUTE H-1
F.A.I. PROJ. NO. I-HI-1(42):10

SCALE: 1" = 20' — JANUARY, 1968

SHEET No. 1 OF 11 SHEETS

ORIGINAL PLAN	SURVEY PLOTTED BY DRAWN BY TRACED BY DESIGNED BY QUANTITIES BY CHECKED BY	DATE
NOTE BOOK No.		

FED. ROAD DIST. NO.	STATE	FED. AID PROJ. NO.	FISCAL YEAR	SHEET NO.	TOTAL SHEETS
HAWAII	HAW.	I-HI-1(42):10	1968	44A	59

NOTE:

1. The Electrical Contractor shall submit in writing a notice to the City & County, Dept. of Traffic, three (3) working days prior to any Construction work.
2. The Contractor shall verify dimensions and locations of existing equipment and facilities.
3. All incidental material and work required to complete the relocation of the street lighting system and fire alarm system shall not be paid for separately, but shall be considered included in the various items in the contract.
4. Concrete Jacket shall have a minimum cover of 2 feet above the top of jacket.

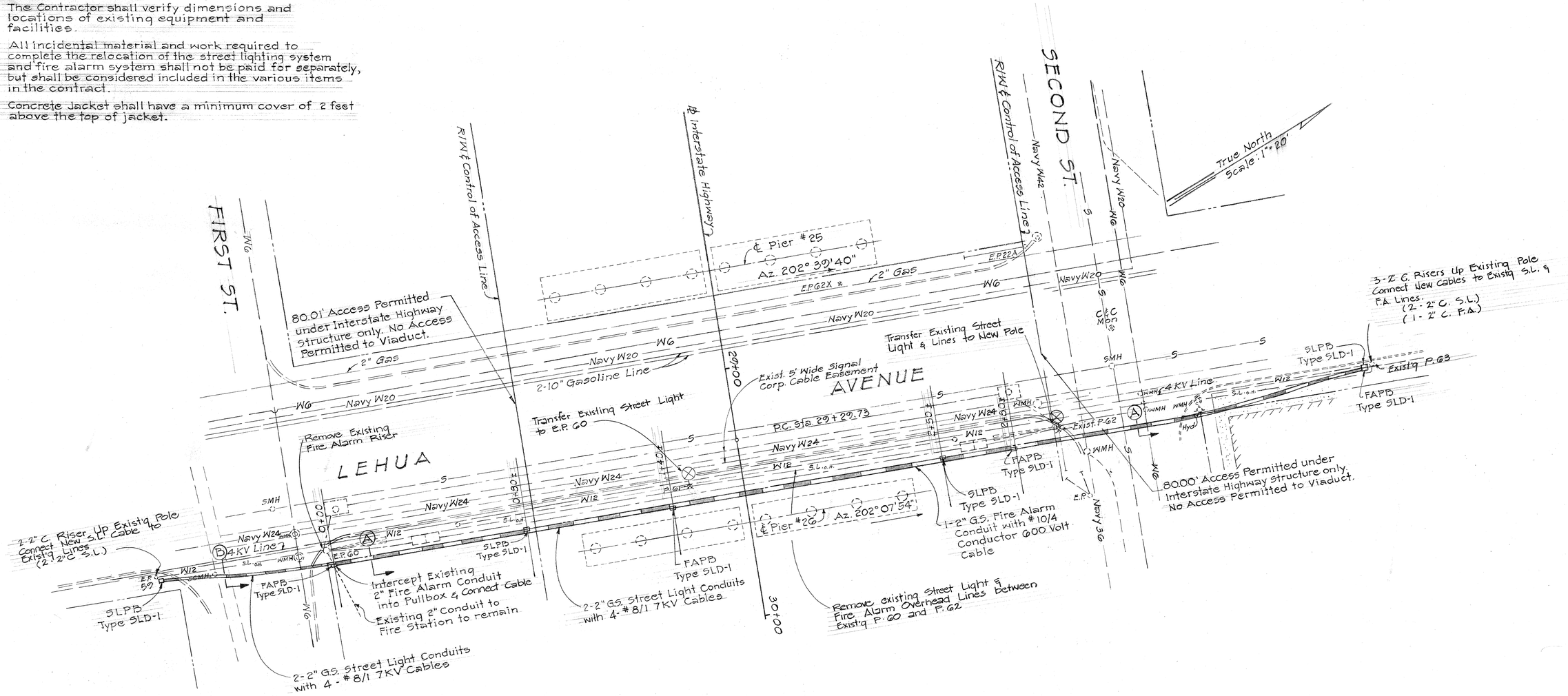

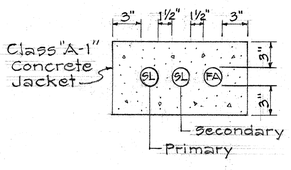

"A"

2-2" Galvanized Steel Conduits (Street Light)
1-2" Galvanized Steel Conduits (Fire Alarm)

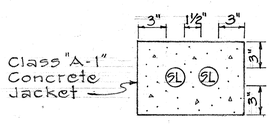

"B"

2-2" Galvanized Steel Conduit (Street Light)

ORIGINAL PLAN		DATE
	SURVEY PLOTTED BY	
	DRAWN BY	" " " "
	TRACED BY	" " " "
NOTE BOOK	DESIGNED BY	
No.	QUANTITIES BY	
	CHECKED BY	

APPROVED:

/s/ William C. Hong
TRAFFIC ENGINEER
DEPT. OF TRAFFIC, CITY & COUNTY OF HONOLULU

10/31/68
DATE

STATE OF HAWAII
DEPARTMENT OF TRANSPORTATION
HIGHWAYS DIVISION

C & C STREET LIGHTING AND FIRE ALARM SYSTEMS

INTERSTATE ROUTE H-1

F.A.I. PROJ. NO. I-HI-1(42):10

Scale: As Noted — Oct., 1968

SHEET No. 44 OF 44 SHEETS

FED. ROAD DIST. NO.	STATE	FED. AID PROJ. NO.	FISCAL YEAR	SHEET NO.	TOTAL SHEETS
HAWAII	HAW.	I-HI-1(42):10	1968	44B	59

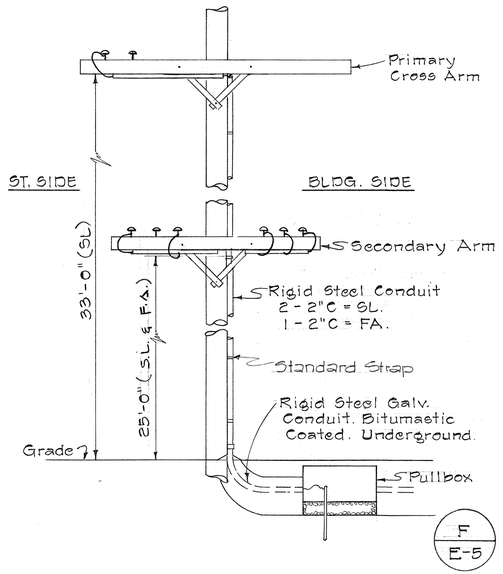

TYPICAL RISER POLE DETAIL

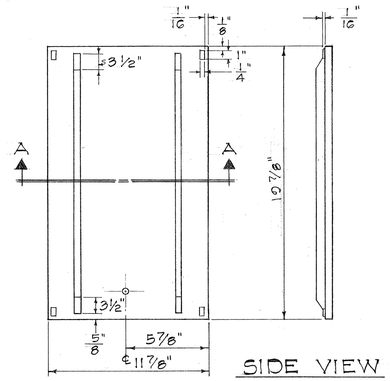

BACK VIEW

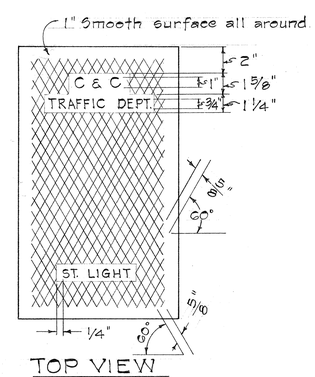

SIDE VIEW TOP VIEW

COVER

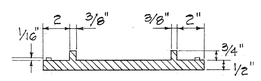

SECTION "A-A"

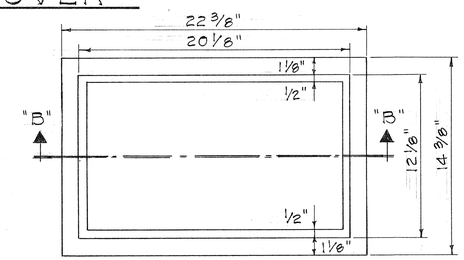

TOP VIEW OF FRAME

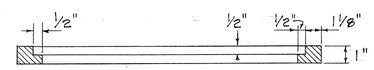

SECTION "B-B"

CAST IRON FRAME

B
E-5

CAST IRON FRAME AND COVER

NOTES:

1. Sides of cover are slightly beveled to facilitate installation. Bevel is inward from front to back.
2. To be cast from Grey Iron.
3. To cover SLD-1 Street Lighting Pullbox.
4. For Fire Alarm Pullbox, Cover to have "Fire Alarm" identification.

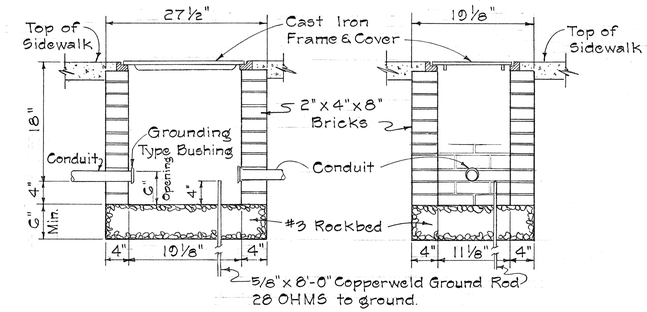

CAST IN PLACE PULLBOX

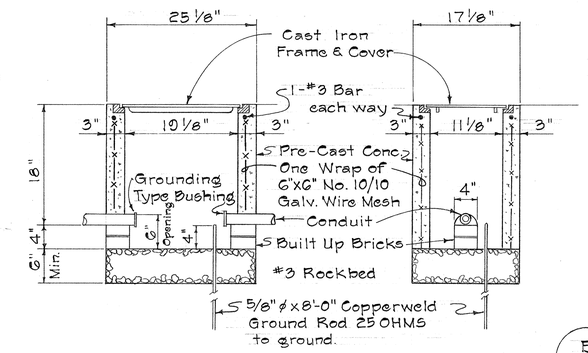

PRECAST PULLBOX

B
E-5

SLD-1 STREET LIGHT PULLBOX

APPROVED:

William C. Hong
TRAFFIC ENGINEER
DEPT. OF TRAFFIC, CITY & COUNTY OF HONOLULU

10-31-68
DATE

STATE OF HAWAII
DEPARTMENT OF TRANSPORTATION
HIGHWAYS DIVISION

C&C STREET LIGHTING AND FIRE ALARM SYSTEMS

INTERSTATE ROUTE H-1
F.A.I. PROJ. No. I-HI-1(42):10

Scale: NTS Date: Oct. 1968

SHEET No. OF SHEETS

ORIGINAL PLAN		DATE
	SURVEY PLOTTED BY	
	DRAWN BY	" "
	TRACED BY	" "
NOTE BOOK	DESIGNED BY	" "
	QUANTITIES BY	" "
No.	CHECKED BY	

FED. ROAD DIST. NO.	STATE	FED. AID PROJ. NO.	FISCAL YEAR	SHEET NO.	TOTAL SHEETS
HAWAII	HAW.	I-H1-1(42)	1968	45	50

NOTE:
Embankment material shall be excavated from within the Highway Right-of-Way between Lehua Avenue and the Navy's Railroad Right-of-Way.

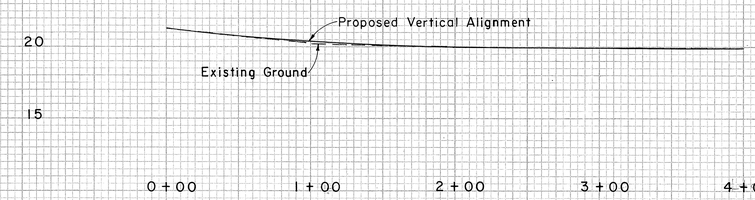

PROFILE
VERTICAL : 1"= 1'
HORIZONTAL: 1"=50'

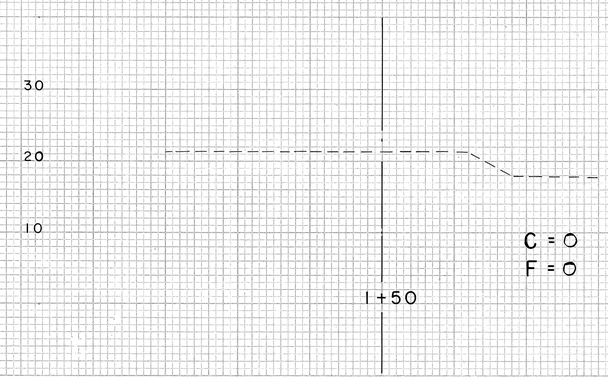

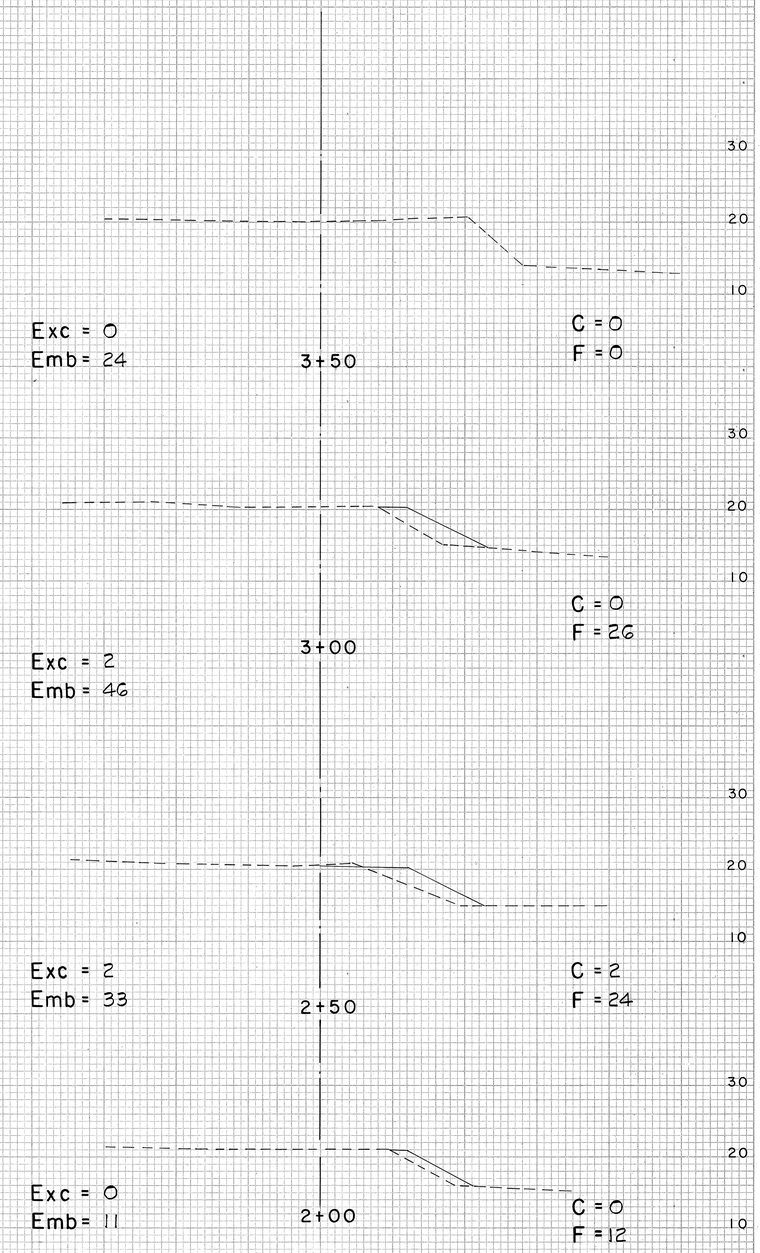

ACCESS ROAD AT ℄ STA. 36+00

SHEET NO. 2 OF 11 SHEETS

45

FINAL SURVEY	BY	DATE
SURVEYED		
PLOTTED		
TEMPLATE		
AREAS		
AREAS CHECKED		
NOTE BOOK		
NO.		

ORIGINAL SURVEY	BY	DATE
SURVEYED		
PLOTTED		
TEMPLATE		
AREAS		
AREAS CHECKED		
NOTE BOOK		
NO.		

FED. ROAD DIST. NO.	STATE	FED. AID PROJ. NO.	FISCAL YEAR	SHEET NO.	TOTAL SHEETS
HAWAII	HAW.	I-H1-1(42)	1968	46	59

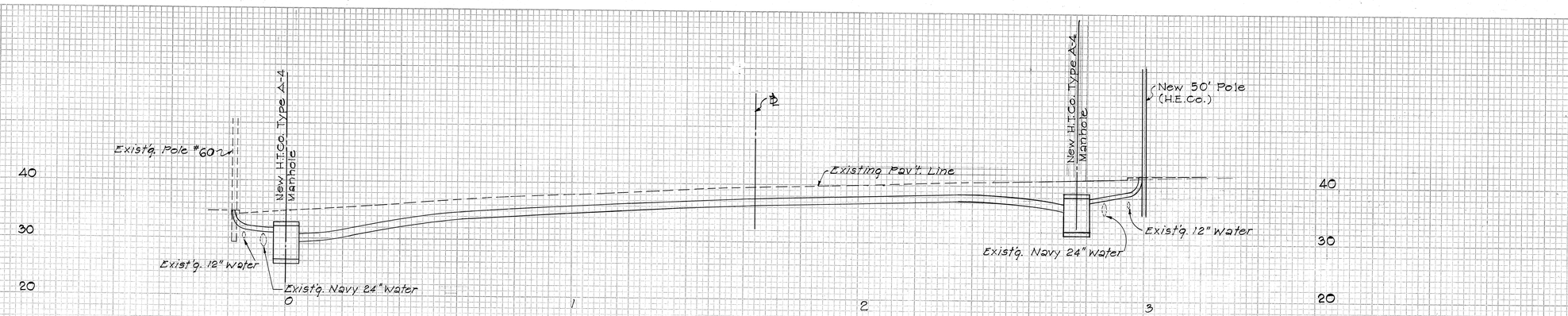

PROFILE ~ TELEPHONE DUCT LINE T-1

Scale: Hor. 1" = 20'
Vert. 1" = 10'

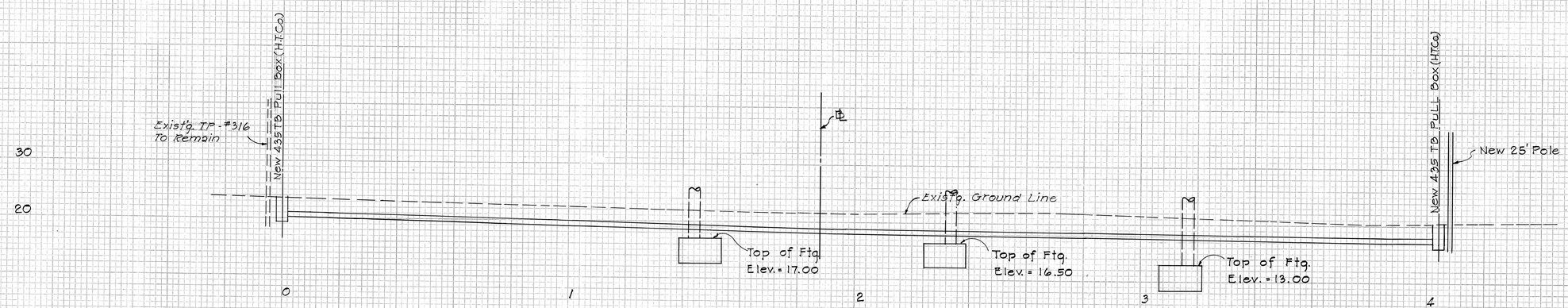

PROFILE ~ TELEPHONE DUCT LINE T-2

Scale: Horiz. 1" = 20'
Vert. 1" = 10'

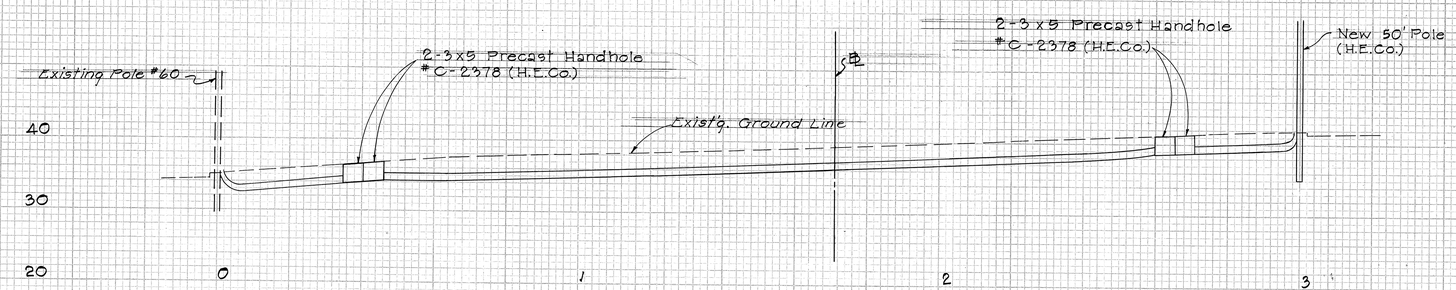

PROFILE ~ ELECTRIC DUCT LINE E-1

Scale: Horiz. 1" = 20'
Vert. 1" = 10'

APPROVED:

J. B. Henderson	3-15-68
HAWAIIAN ELECTRIC Co., Inc.	DATE
D. M. Judd	3-18-68
HAWAIIAN TELEPHONE Co.	DATE

ACCESS ROAD AND UTILITIES

ELECTRIC AND TELEPHONE

SHEET NO. 3 OF 11 SHEETS

46

FINAL SURVEY: SURVEYED, PLOTTED, TEMPLATE, AREAS, AREAS CHECKED, NOTE BOOK, NO., BY, DATE

ORIGINAL SURVEY: SURVEYED, PLOTTED, TEMPLATE, AREAS, AREAS CHECKED, NOTE BOOK, NO., BY, DATE

FED. ROAD DIST. NO.	STATE	FED. AID PROJ. NO.	FISCAL YEAR	SHEET NO.	TOTAL SHEETS
HAWAII	HAWAII	I-H1-1(42)	1968	47	50

Note:
See (Type "A" M.H. Sht. No. 2 of 2 Shts.) for Sections "F-F", "E_1-E_1" and other Manhole Details.

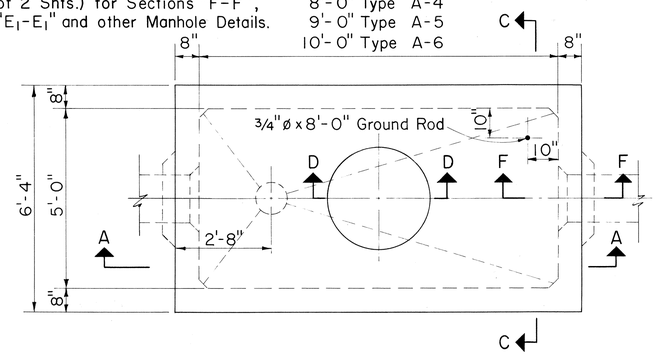

PLAN M.H. TYPE "A"
FOR ROADWAY & SIDEWALK AREAS
Scale: 1/2" = 1'-0"

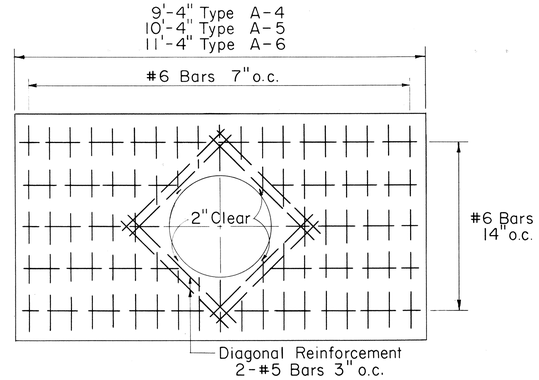

ROOF SLAB REINF. PLAN
Scale: 1/2" = 1'-0"

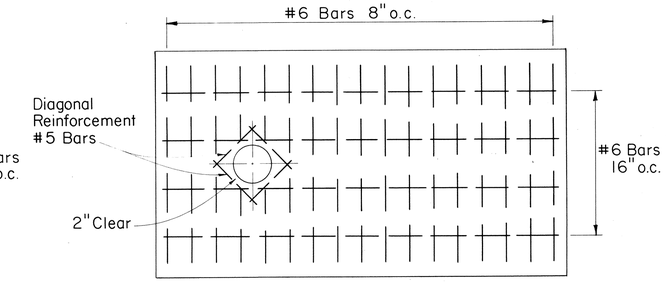

FLOOR SLAB REINF. PLAN
Scale: 1/2" = 1'-0"

GENERAL NOTES

1. DESIGN DATA
   f_s = 20,000 psi; f'_c = 3000 psi; f_c = 1200 psi.
   n = 10; w = Equivalent Fluid Pressure = 30 psf.
2. All Construction Joints shall be waterproofed with 2 applications of Thoro Seal or equal.
3. For Duct Window Location see Plan; For Elevations see Profile.
4. Duct Window to suit. See Plan, Profile and Standard Detail Sheets for Location & Details.
5. For Duct Window Details see Section "F-F" as shown on Type "A" M.H. Sht. No. 2 of 2 Shts.

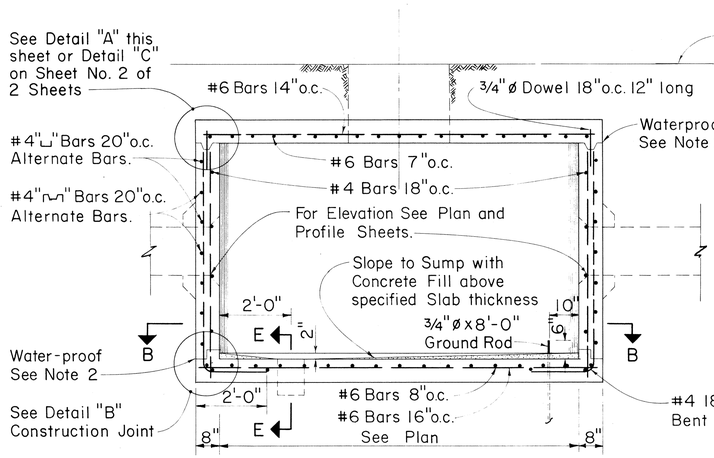

SECTION "A-A"
Scale: 1/2" = 1'-0"

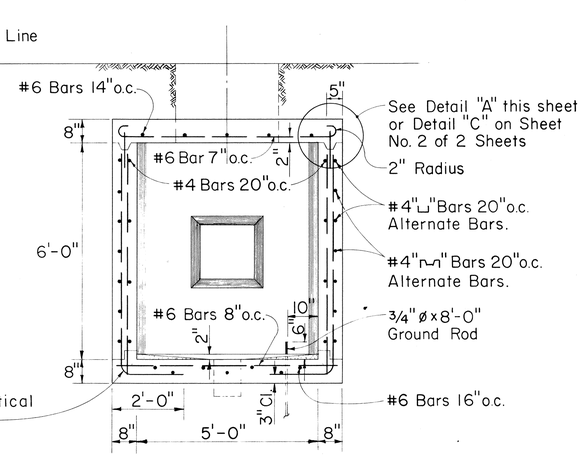

SECTION "C-C"
Scale: 1/2" = 1'-0"

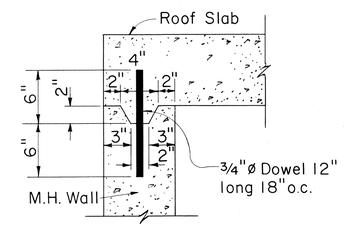

DETAIL "A"
TOP CONSTRUCTION JOINT
Scale: 1 1/2" = 1'-0"
(Optional for cast-in-place construction
Required for precast construction)

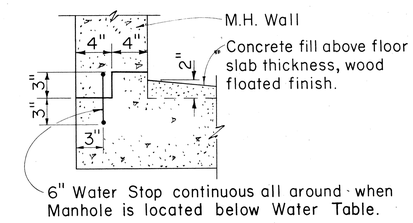

DETAIL "B"
BOTTOM CONSTRUCTION JOINT
Scale: 1 1/2" = 1'-0"

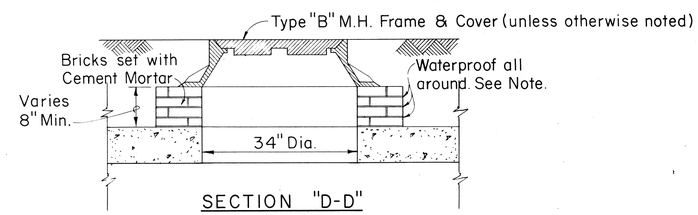

SECTION "D-D"
M.H. COVER DETAIL
Scale: 3/4" = 1'-0"

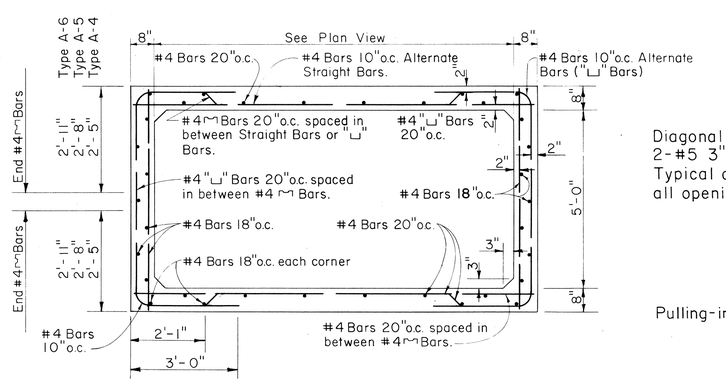

SECTION "B-B"
Scale: 1/2" = 1'-0"

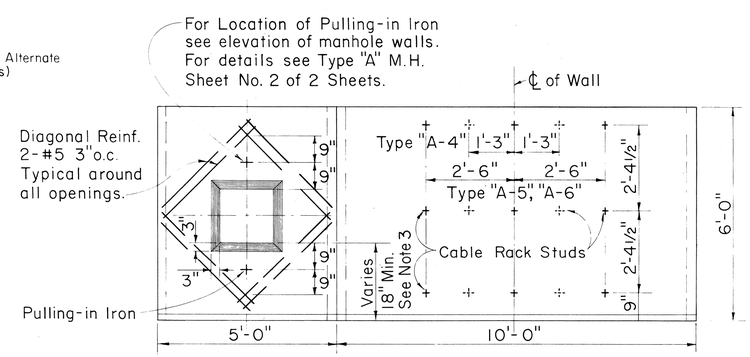

ELEVATION OF INSIDE WALLS TYPES A-4, A-5 & A-6
(OPPOSITE FACES SIMILAR)
Scale: 1/2" = 1'-0"

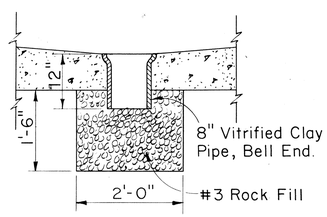

SECTION "E-E"
M.H. SUMP DETAIL
Scale: 3/4" = 1'-0"

Note:
See (Type "A" M.H. Sht. No. 2 of 2 Shts.); for Section "E_1-E_1", M.H. SUMP DETAIL; when M.H. is located below Water Table.

APPROVED:
T. H. Fuchel 3-18-68
HAWAIIAN TELEPHONE CO. DATE

TYPE "A" M.H. SHT. NO. 1 OF 2 SHTS.

STATE OF HAWAII
DEPARTMENT OF TRANSPORTATION
HIGHWAYS DIVISION

STANDARD DETAILS

TYPE "A" MANHOLE FOR ROADWAY AND SIDEWALK AREAS

Scale: As Noted Date: March 1968

SHEET No. 4 OF 11 SHEETS

47

ORIGINAL PLAN	SURVEY PLOTTED BY	DATE
	DRAWN BY	"
	TRACED BY	"
	DESIGNED BY	"
NOTE BOOK	QUANTITIES BY	"
No.	CHECKED BY	"

FED. ROAD DIST. NO.	STATE	FED. AID PROJ. NO.	FISCAL YEAR	SHEET NO.	TOTAL SHEETS
HAWAII	HAWAII	I-HI-1(42)	1968	48	50

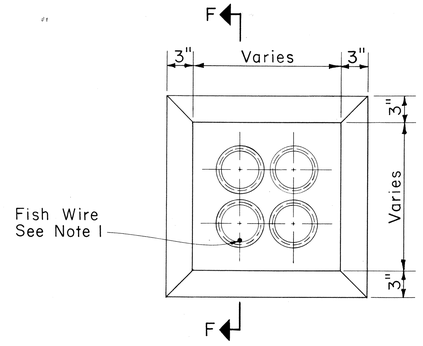

TYPICAL MANHOLE DUCT WINDOW
Scale: 1 1/2" = 1'-0"

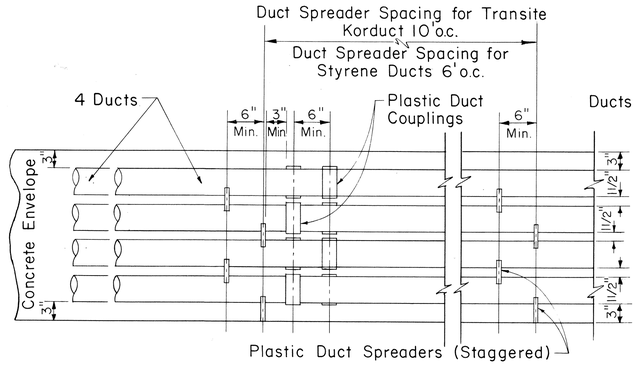

TYPICAL DUCT ENVELOPE ELEVATION
ARRANGEMENT OF COUPLING & PLASTIC SPACERS
Scale: 1" = 1'-0"

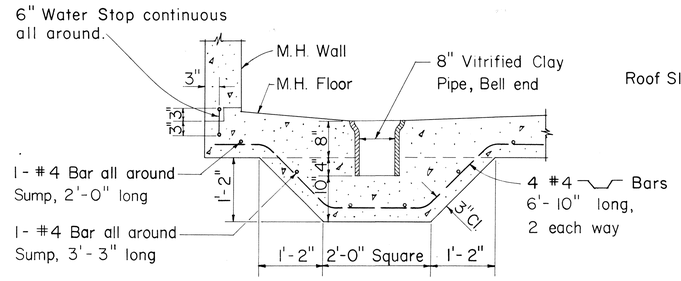

Note: Only for manholes located below water table

SECTION "E1 - E1"
MANHOLE SUMP DETAIL
Scale: 3/4" = 1'-0"

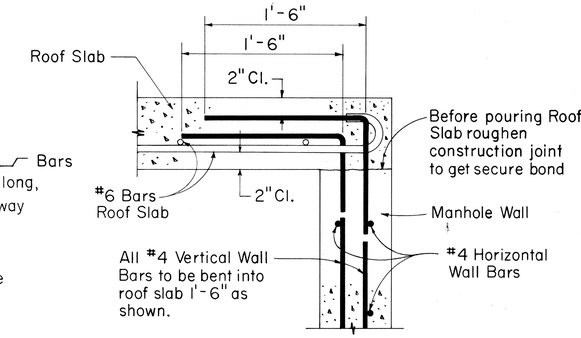

DETAIL "C"
(USED FOR CAST-IN-PLACE CONSTRUCTION)
Scale: 1 1/2" = 1'-0"

NOTE

1. The Contractor shall place #12 Fish Wire in designated duct throughout its entire length with protrusions of 2 feet in manholes & handholes at each end and 1 foot in pullboxes.

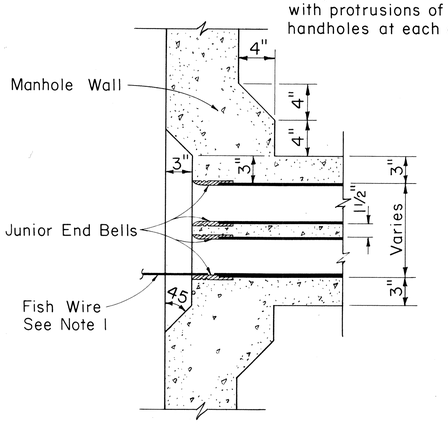

SECTION "F-F"
TYPICAL WINDOW DETAIL & JUNIOR END BELL
Scale: 1 1/2" = 1'-0"

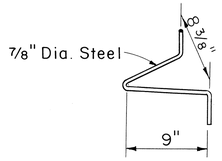

PULLING-IN IRON

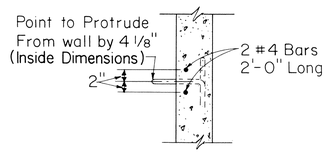

SECTIONAL VIEW OF PULLING-IN IRON
Scale: 3/4" = 1'-0"

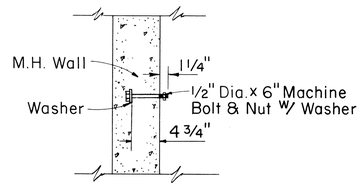

CABLE RACK STUD BOLT DETAIL
Scale: 1" = 1'-0"

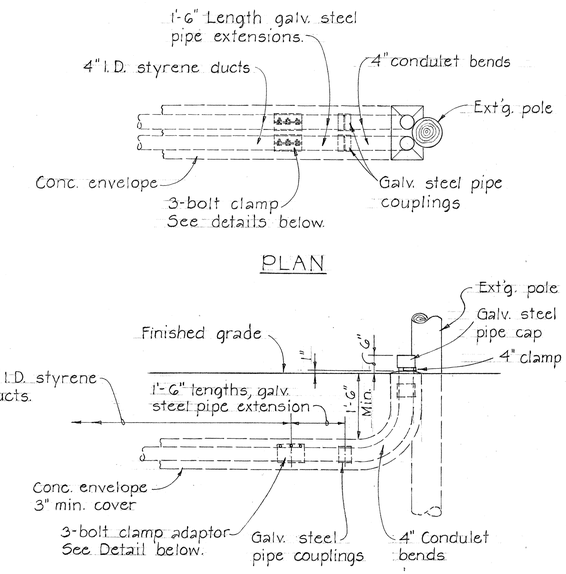

TYPICAL INSTALLATION DETAIL
Scale: 1/2" = 1'-0"

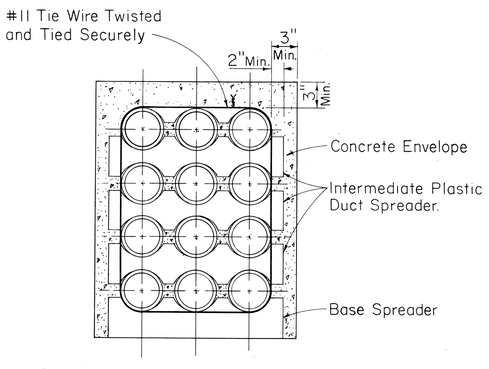

SECTION SHOWING SPACERS

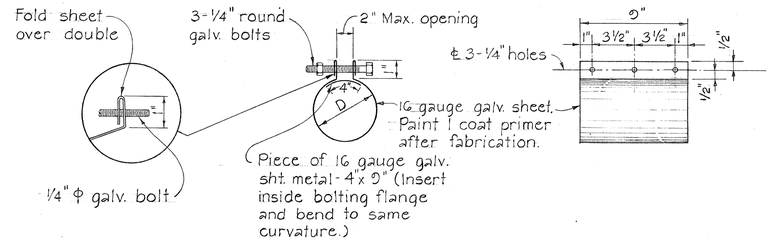

3-BOLT CLAMP ADAPTOR DETAIL
Not to Scale

APPROVED:
D. H. Judd 3-18-68
HAWAIIAN TELEPHONE CO. DATE

TYPE "A" M.H. SHT. NO. 2 OF 2 SHTS.

STATE OF HAWAII
DEPARTMENT OF TRANSPORTATION
HIGHWAYS DIVISION

STANDARD DETAILS

TYPE "A" MANHOLE AND MISCELLANEOUS TELEPHONE DETAILS

Scale: As Noted Date: March 1968

SHEET No. 5 OF 11 SHEETS

ORIGINAL PLAN	SURVEY PLOTTED BY	DATE
	DRAWN BY	"
	TRACED BY	"
NOTE BOOK	DESIGNED BY	"
No.	QUANTITIES BY	"
	CHECKED BY	"

FED. ROAD DIST. NO.	STATE	FED. AID PROJ. NO.	FISCAL YEAR	SHEET NO.	TOTAL SHEETS
HAWAII	HAW.	I-H1-1(42)	1968	40	50

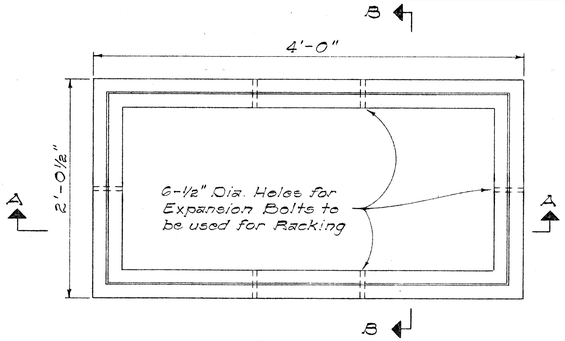

PLAN

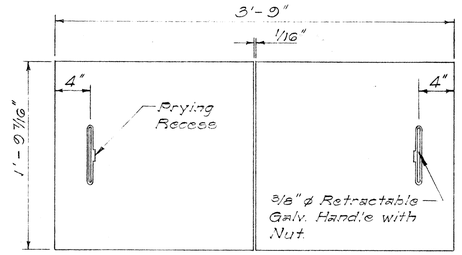

PLAN OF COVER

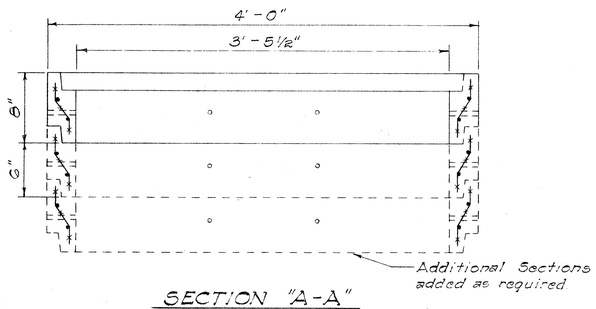

SECTION "A-A"

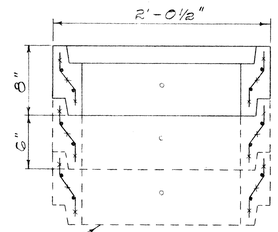

SECTION "B-B"

DETAIL OF LARGE PULL BOX No. 435T-B

Scale: 1½" = 1'-0"

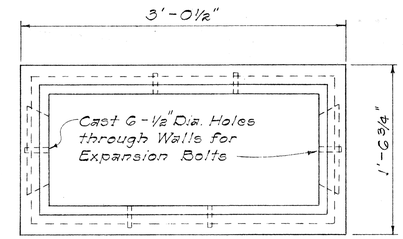

PLAN

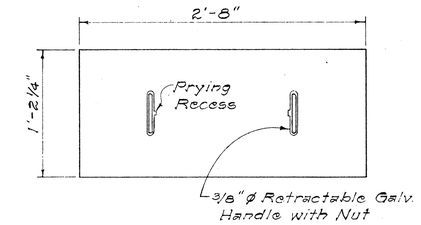

PLAN OF COVER

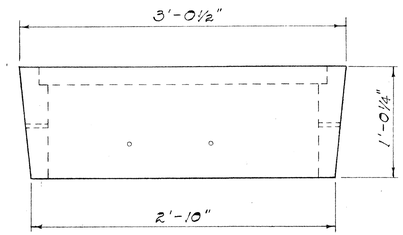

SIDE ELEVATION

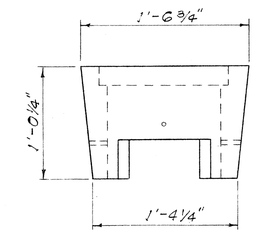

END ELEVATION

DETAIL OF SMALL PULL BOX No. 434T

Scale: 1½" = 1'-0"

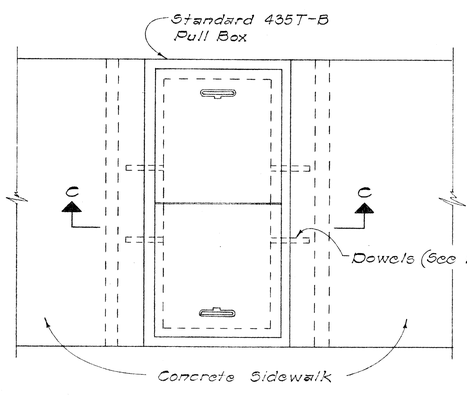

PLAN

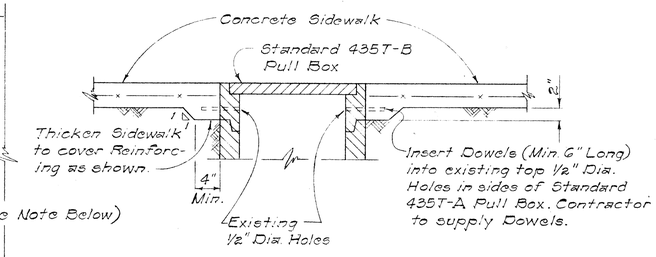

NOTE: Dowels shall be used only where the Sidewalk is as Wide or Narrower than the Pull Box.

SECTION "C-C"

INSTALLATION DETAIL OF PULL BOX No. 435T-B IN SIDEWALK AREAS

Scale: 1" = 1'-0"

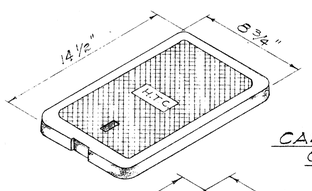

CAST IRON COVER

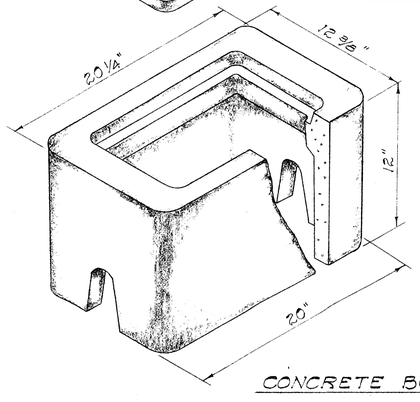

CONCRETE BOX

TYPE "B" METER BOX TYPE 436T

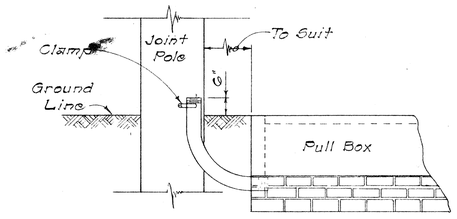

TYPICAL 90° CONDUIT BEND TO POLE

Not To Scale

APPROVED:
F. H. Judd 3-18-68
HAWAIIAN TELEPHONE CO. DATE

STATE OF HAWAII
DEPARTMENT OF TRANSPORTATION
HIGHWAYS DIVISION

STANDARD DETAILS
TELEPHONE PULL BOXES
Nos. 435T-B, 434T AND 436T

Scale: As Shown Date: March 1968

SHEET No. 6 OF 11 SHEETS

ORIGINAL PLAN | SURVEY PLOTTED BY | DRAWN BY | TRACED BY | DESIGNED BY | QUANTITIES BY | CHECKED BY | DATE | NOTE BOOK No.

PRINTED ON No. 1000H CLEARPRINT

FED. ROAD DIST. NO.	STATE	FED. AID PROJ. NO.	FISCAL YEAR	SHEET NO.	TOTAL SHEETS
HAWAII	HAWAII	I-H1-1(42)	1968	50	50

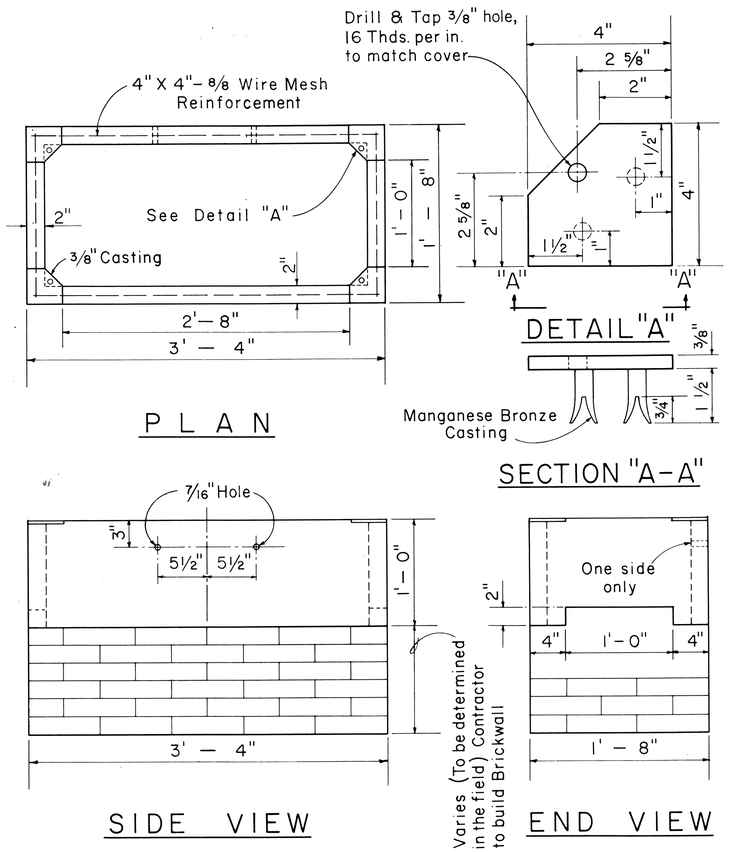

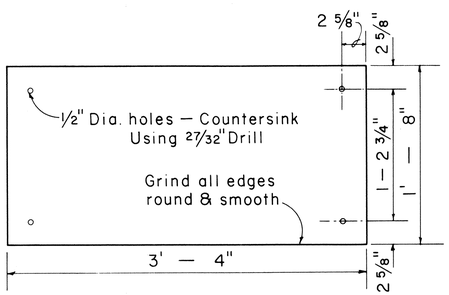

NOTES:
Use 3/8" Plate for driveways.
Concrete Box 225 Lbs.
1/4" Checker Plate 62 Lbs.
Secure cover with 3/8" x 1" flat head brass machine screws.

1/4" CHECKER PLATE COVER

(Hot dip galvanize checkered plate after drilling, countersinking, and grinding edge)

1'-4" X 3'-0" CONCRETE SERVICE BOX

Scale: 1 1/2" = 1'-0"

011250

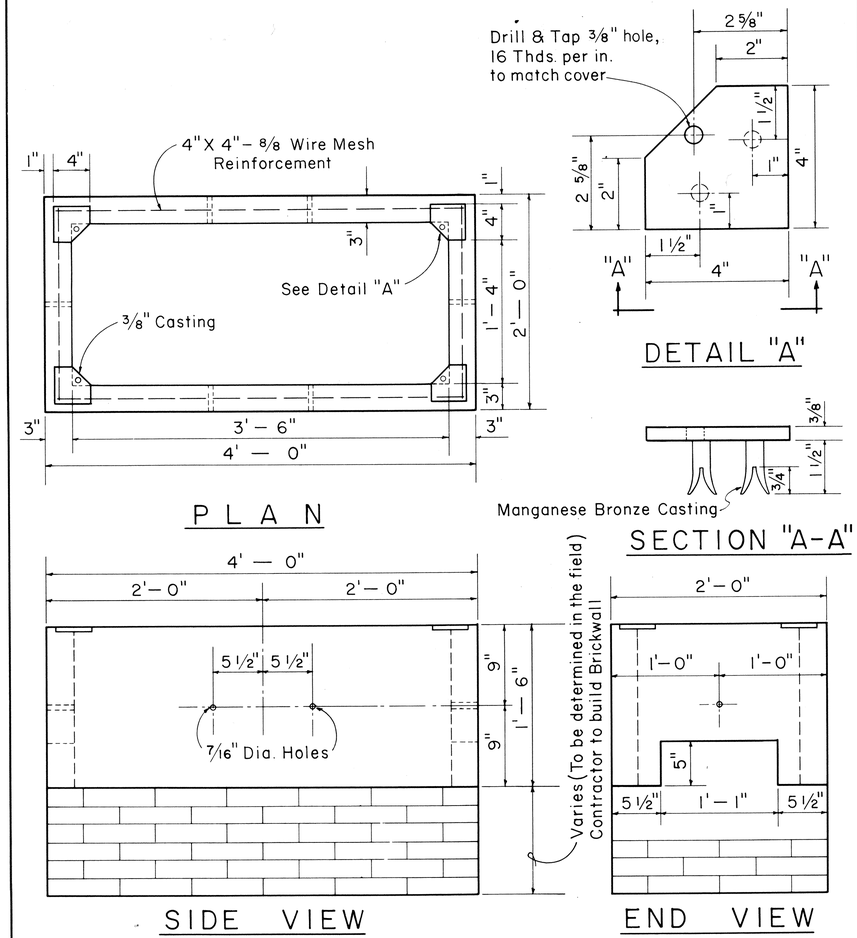

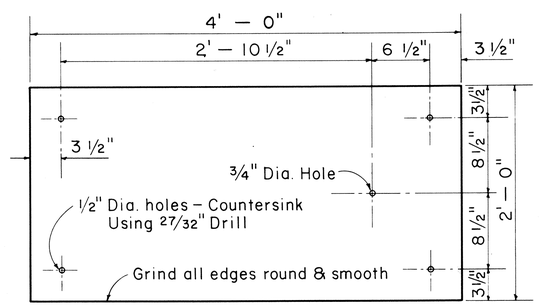

NOTES:
Use 3/8" Plate for driveway.
Concrete Box 575 Lbs.
1/4" Checker Plate 130 Lbs.
Secure cover with 3/8" x 1" flat head brass machine screws.

1/4" CHECKER PLATE COVER

(Hot dip galvanize checkered plate after drilling, countersinking, and grinding edge)

1'-6" X 3'-6" CONCRETE SERVICE BOX

Scale: 1 1/2" = 1'-0"

011255

CREOSOTED DOUGLAS FIR & YELLOW PINE POLE DATA

LENGTH IN FEET	CLASS	APPROX. MINIMUM DIMENSIONS (INCHES) AT TOP DIA.	AT TOP CIR.	6' FROM BUTT DIA.	6' FROM BUTT CIR.	AVERAGE WEIGHT (LBS.) DOUGLAS FIR	POLE SETTING DEPTH (FT.) IN SOIL	IN ROCK	BREAKING LOAD 2'-0" BELOW TOP OF POLE (LBS.)
25	5	6.04	19	8.26	26	525	4.5	3	1900
30	3	7.32	23	10.32	32.5	810	5	3.5	3000
	5	6.04	19	8.90	28	600	5	3.5	1900
35	2	7.96	25	12.23	37.5	1260	5	3.5	3700
	5	6.04	19	9.55	30	770	5	3.5	1900
40	3	7.32	23	11.77	37	1320	5.5	3.5	3000
45	2	7.96	25	13.20	41.5	1845	6	4.	3700
	3	7.32	23	12.25	38.5	1575	6	4	3000
50	2	7.96	25	13.70	43.	2150	6.5	4	3700
	3	7.32	23	12.70	40	1850	6.5	4	3000
55	1	8.59	27	15.11	47.5	2860	7	4.5	4500
	2	7.96	25	14.15	44.5	2475	7	4.5	3700
	3	7.32	23	13.20	41.5	2145	7	4.5	3000
60	1	8.59	27	15.75	49.5	3360	7	4.5	4500
	2	7.96	25	14.62	46	2820	7	4.5	3700
65	1	8.59	27	16.20	51	3835	7.5	5	4500
	2	7.96	25	15.11	47.5	3250	7.5	5	3700
70	1	8.59	27	16.70	52.5	4340	7.5	5	4500
	2	7.96	25	15.60	49	3640	7.5	5	3700
75	1	8.59	27	17.20	54	4800	8	5.5	4500
	2	7.96	25	16.05	50.5	4050	8	5.5	3700
80	1	8.59	27	17.50	55	5240	8	6	4500
	2	7.96	25	16.40	51.5	4400	8	6	3700
85	1	8.59	27	18.00	56.5	5780	8.5	6.5	4500
	2	7.96	25	16.88	53	4930	8.5	6.5	3700
90	1	8.59	27	18.30	57.5	6300	8.5	6.5	4500
	2	7.96	25	17.20	54	5400	8.5	6.5	3700

NOTE:
The ultimate fiber stress for creosoted Southern Yellow Pine & Douglas Fir is 7,400 Lbs. per square inch.

Weights are for untreated poles. Add 5% as estimate of added weight of creosote treatment.

REFERENCES:
American Standards Association 05.4-1941, 05.6-1945.
Standard Handbook for Electrical Engineers, Eighth Edition
H. E. Co. Specification for Poles.

WOOD POLE DATA

APPROVED:

A. F. Henderson 3-18-68
HAWAIIAN ELECTRIC Co., Inc. DATE

F. H. Judd 3-18-68
HAWAIIAN TELEPHONE Co. DATE

STATE OF HAWAII
DEPARTMENT OF TRANSPORTATION
HIGHWAYS DIVISION

STANDARD DETAILS
H.E. Co. AND H.T. Co.
SERVICE BOX DETAILS
AND WOOD POLE DATA

Scales: As Noted Date March 1968

SHEET NO. 7 OF 11 SHEETS

50 (1)

ORIGINAL PLAN | NOTE BOOK No. | SURVEY PLOTTED BY | DRAWN BY | TRACED BY | DESIGNED BY | QUANTITIES BY | CHECKED BY | DATE

FED. ROAD DIST. NO.	STATE	FED. AID PROJ. NO.	FISCAL YEAR	SHEET NO.	TOTAL SHEETS
HAWAII	HAWAII	I-H1-1(42)	1968	51	59

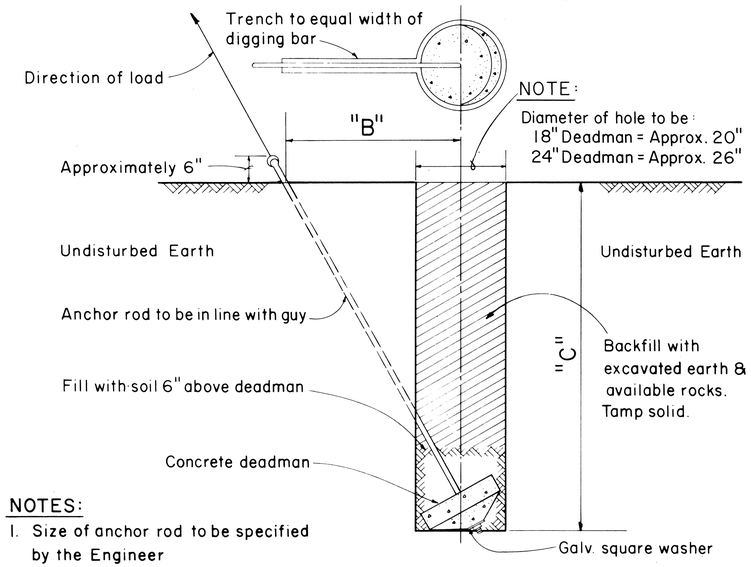

NOTES:
1. Size of anchor rod to be specified by the Engineer
2. Use Anchoring Data.

GUY ANCHOR DEADMAN

Scale: 3/4" = 1' – 0"

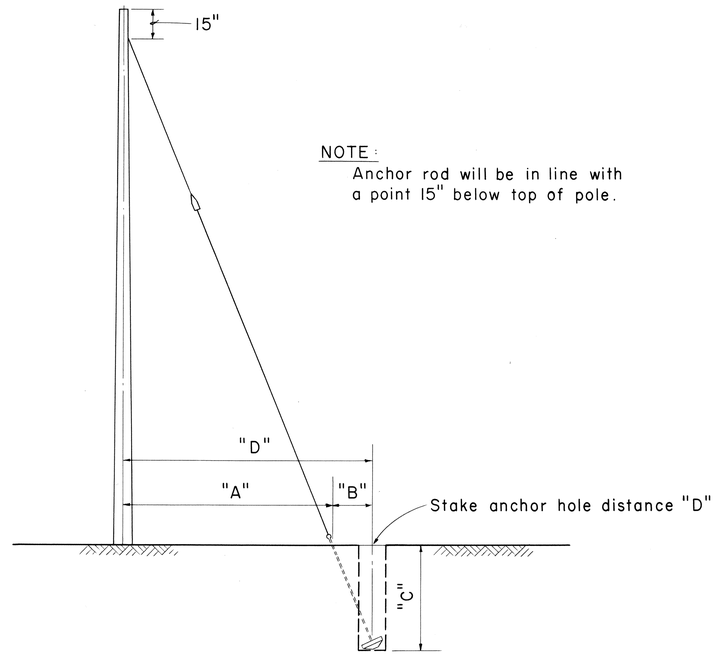

Not to Scale

FOR 25', & 30' POLES WITH 8'-0" ANCHOR RODS				
"A"	"B"	"C"		"D" = ("A" + "B")
LEAD-ANCHOR ROD TO ℄ OF POLE	ANCHOR ROD TO ℄ OF HOLE	VERTICAL DEPTH 18" D.M.	VERTICAL DEPTH 24" D.M.	TOTAL DISTANCE POLE TO HOLE
5'-0"	1'-8"	7'-1"	7'-4"	6'-8"
10'-0"	3'-0"	6'-7"	7'-0"	13'-0"
15'-0"	4'-0"	6'-1"	6'-6"	19'-0"
20'-0"	4'-8"	5'-6"	5'-10"	24'-8"
25'-0"	5'-2"	4'-11"	5'-4"	30'-2"
FOR 35' THRU 70' POLES WITH 8'-0" ANCHOR RODS				
5'-0"	1'-0"	7'-3"	7'-4"	6'-0"
10'-0"	1'-11"	7'-1"	7'-3"	11'-11"
15'-0"	2'-8"	6'-9"	7'-1"	17'-8"
20'-0"	3'-3"	6'-6"	6'-10"	23'-3"
25'-0	3'-10"	6'-2"	6'-7"	28'-10"
FOR 40' THRU 70' POLES WITH 1 1/4" x 10'-0" ANCHOR RODS				
5'-0"	1'-7"		9'-4"	6'-7"
10'-0"	3'-0"		9'-0"	13'-0"
15'-0"	4'-2"		8'-6"	19'-2"
20'-0"	5'-3"		7'-11"	25'-3"
25'-0"	6'-2"		7'-3"	31'-2"

D. M. = Deadman

TABLE 2 ANCHOR ROD - ANCHOR SLUG - SQUARE WASHER COMBINATION

H.E. CODE NO.	ANCHOR ROD	WORKING TENSION 1/2 ULT. (LBS.)	H.E. CODE NO.	CONC. ANC. (IN.)	H.E. CODE NO.	WASHER SIZE	QTY.
617	5/8" x 8'-0" Steel	8,000	518	18	2320	4" x 4" x 3/16"	2
615	5/8" x 8'-0" Cu Cov Stl	9,250	518	18	**	3" x 3" x 1/8"	2
618	3/4" x 8'-0" Steel	11,500	518	18	2330	6" x 6" x 3/8"	1
619	1" x 8'-0" Steel	18,000	524	24	2331	6" x 6" x 1/2"	1
616	1" x 8'-0" Cu Cov Stl	22,500	524	24	**	4" x 4" x 3/16"	2
613	1 1/4" x 10'-0" Steel	29,000	524	24	2330	6" x 6" x 3/8"	2

** Use bronze square washers included in anchor rod assembly on copper covered steel (Cu Cov Stl) anchor rods.

ANCHORING DATA

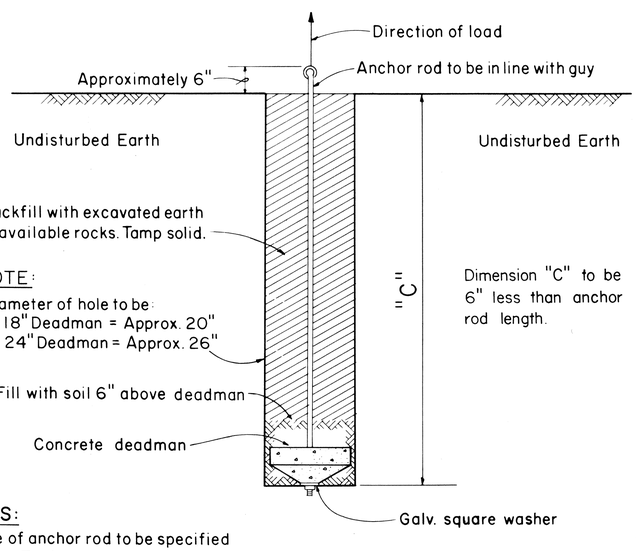

NOTES:
1. Size of anchor rod to be specified by the Engineer.
2. Use Anchoring Data.

SIDE – WALK ANCHOR

Scale: 3/4" = 1' – 0"

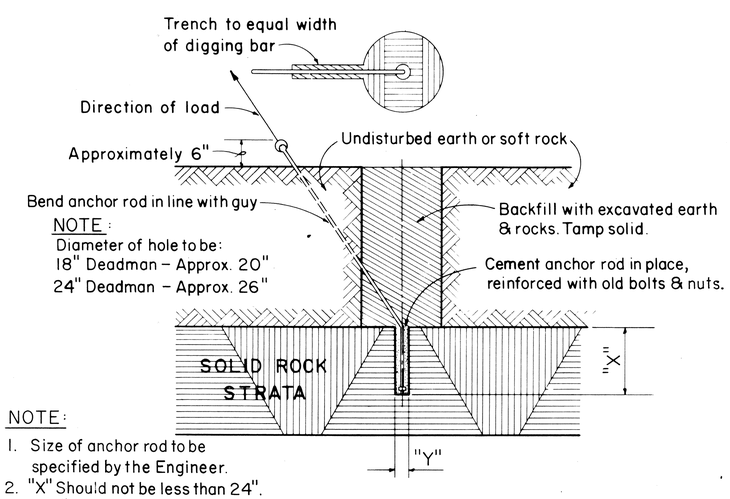

NOTE:
1. Size of anchor rod to be specified by the Engineer.
2. "X" Should not be less than 24". If "X" is less than 24" complete hole & install anchor.
3. "Y" 5/8" Anchor rod drill 2" hole
   3/4" Anchor rod drill 2" hole
   1" Anchor rod drill 2 1/2" hole
   1 1/4" Anchor rod drill 3" hole
4. Use Anchoring Data.

ROCK ANCHOR

Not to Scale

APPROVED:

A D Henderson 3-15-68
HAWAIIAN ELECTRIC Co., Inc. DATE

F H Judd 3-18-68
HAWAIIAN TELEPHONE Co. DATE

STATE OF HAWAII
DEPARTMENT OF TRANSPORTATION
HIGHWAYS DIVISION

STANDARD DETAILS
H.E. Co. AND H.T. Co.
ANCHOR DETAILS AND ANCHORING DATA

Scales: As Noted Date March 1968

SHEET No. 8 OF 11 SHEETS

51

FED. ROAD DIST. NO.	STATE	FED. AID PROJ. NO.	FISCAL YEAR	SHEET NO.	TOTAL SHEETS
HAWAII	HAWAII	I-H1-1(42)	1968	52	50

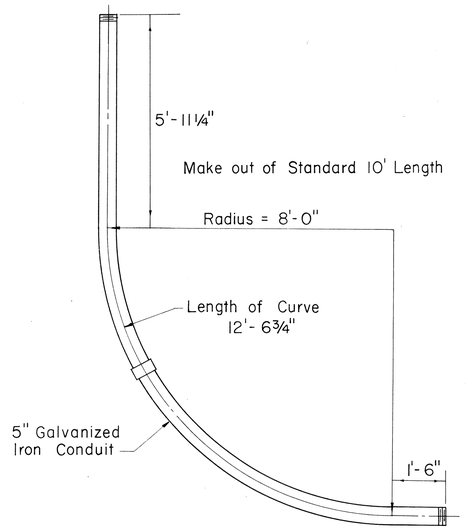

46 KV COMBINATION RISER AND BEND

(8'-0" RADIUS)

Not to Scale

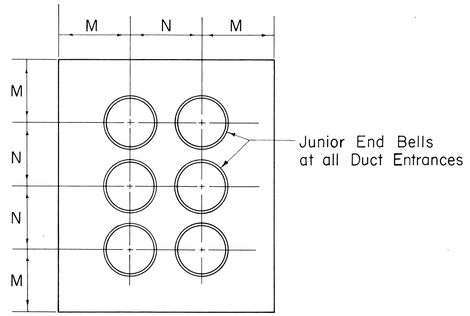

TYPICAL DUCT DETAIL AT MANHOLE WALL

Not to Scale

SIZE	M	N
3"	5"	6"
4"	5½"	7"
4½"	5½"	7½"
5"	6"	8"

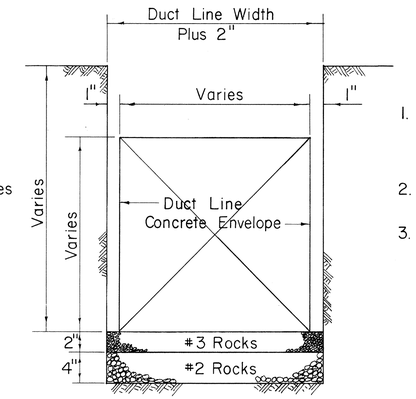

TYPICAL EXCAVATION DETAIL

Not to Scale

NOTES

1. Size of Concrete Envelope and Depth of Excavation to be determined by Project concerned.
2. Widen Trench Excavation when Forms are used.
3. Rock Foundation required only when Water is encountered.

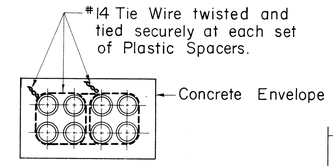

TIE WIRE DETAIL

FOR DUCT LINE MORE THAN 4 DUCTS WIDE

Not to Scale

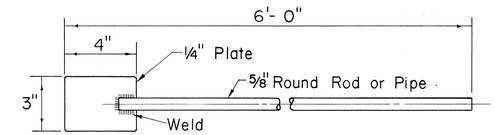

CONCRETE DUCT ENVELOPE TAMPING ROD

Scale: 3" = 1'-0"

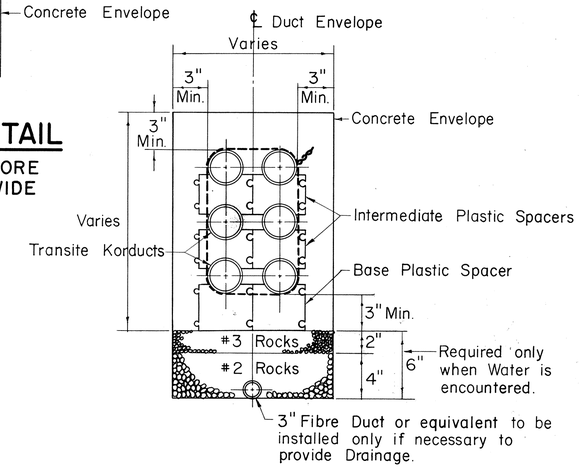

TYPICAL DUCT PLASTIC SPACERS & DRAINAGE SECTION

(6 WAY DUCT SHOWN - 3 HIGH - 2 WIDE)

Not to Scale

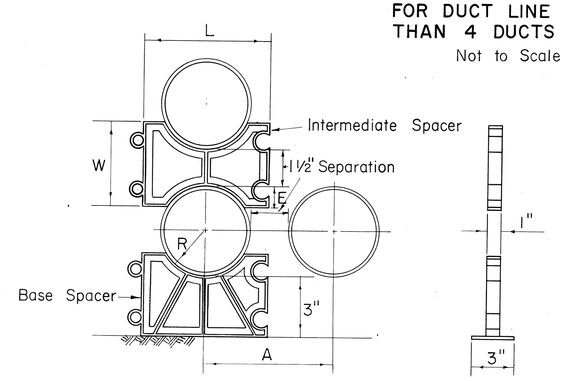

TYPICAL PLASTIC SPACERS

Not to Scale

SIZE	R	E	W	A	L
3"	$1\frac{27}{32}$"	$\frac{7}{8}$"	$3\frac{1}{4}$"	$5\frac{1}{8}$"	5"
4"	$2\frac{13}{32}$"	$1\frac{1}{8}$"	$3\frac{3}{4}$"	$6\frac{1}{4}$"	$6\frac{1}{8}$"
$4\frac{1}{2}$"	$2\frac{23}{32}$"	$1\frac{1}{4}$"	4"	$6\frac{7}{8}$"	$6\frac{3}{4}$"
5"	$3\frac{1}{16}$"	$1\frac{3}{8}$"	$4\frac{1}{4}$"	$7\frac{5}{8}$"	$7\frac{1}{2}$"

For 1½" Separation

PLAN

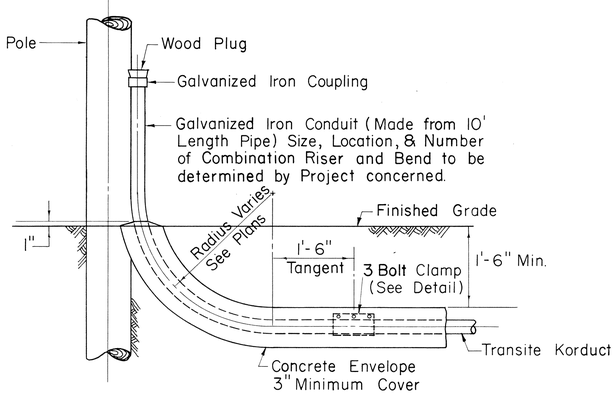

ELEVATION

TYPICAL DETAIL COMBINATION RISER AND BEND

Scale: ¾" = 1'-0"

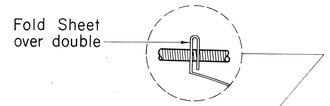

DETAIL

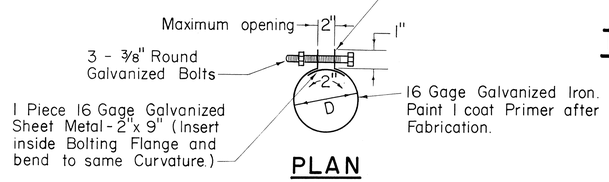

PLAN

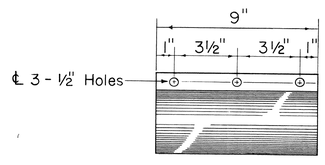

ELEVATION

3 BOLT CLAMP DETAIL

Scale: 3" = 1'-0"

APPROVED:

A D Henderson 3-15-68

HAWAIIAN ELECTRIC CO., INC. DATE

HECo., Inc. Drawing Number	
18585	SHEET No. 1 OF 2 SHEETS

STATE OF HAWAII
DEPARTMENT OF TRANSPORTATION
HIGHWAYS DIVISION

STANDARD DETAILS

CONSTRUCTION STANDARDS
TRANSITE KORDUCTS
UNDERGROUND DUCT LINES

Scales: As Noted Date March 1968

SHEET NO. 9 OF 11 SHEETS

52

FED. ROAD DIST. NO.	STATE	FED. AID PROJ. NO.	FISCAL YEAR	SHEET NO.	TOTAL SHEETS
HAWAII	HAWAII	I-H1-1(42)	1968	53	59

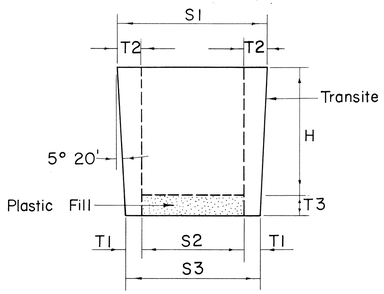

PLUGS FOR TRANSITE KORDUCTS

Not to Scale

SIZE	H	S1	S2	S3	T1	T2	T3
3"	4"	3 3/8"	2"	2 5/8"	5/16"	11/16"	3/4"
4"	4 1/2"	4 27/64"	2 3/4"	3 37/64"	13/32"	27/32"	3/4"
4 1/2"	4 1/2"	4 59/64"	3"	4 5/64"	35/64"	31/32"	3/4"
5"	4 1/2"	5 27/64"	3 1/2"	4 37/64"	35/64"	31/32"	3/4"

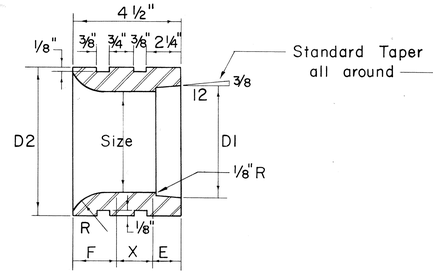

JUNIOR END BELLS

Not to Scale

SIZE	D1	D2	F	X	E	R
3"	3 25/64"	4 1/2"	1 11/32"	1 29/32"	1 1/4"	1 3/4"
4"	4 25/64"	5 3/4"	1 9/16"	1 9/16"	1 3/8"	2"
4 1/2"	4 57/64"	6 1/4"	1 9/16"	1 9/16"	1 3/8"	2"
5"	5 29/64"	7"	1 9/16"	1 7/16"	1 1/2"	2"

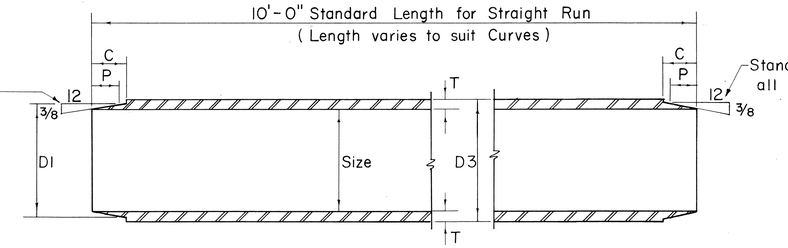

TRANSITE KORDUCTS

Not to Scale

SIZE	D1	D3	C	P	T
3"	3 25/64"	3 35/64"	1 1/8"	7/8"	17/64"
4"	4 25/64"	4 35/64"	1 1/4"	1"	17/64"
4 1/2"	4 57/64"	5 3/64"	1 1/4"	1"	17/64"
5"	5 29/64"	5 39/64"	1 25/64"	1 1/8"	19/64"

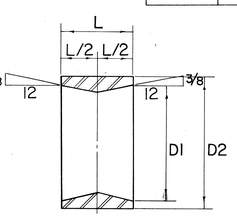

SIZE	D1	D2	L
3"	3 25/32"	4 11/64"	2 1/4"
4"	4 25/64"	5 3/16"	2 1/2"
4 1/2"	4 57/64"	5 49/64"	2 1/2"
5"	5 29/64"	6 21/64"	2 3/4"

TAPERED COUPLINGS

Not to Scale

Note "X"

Provide one set of Spacers
(a) 10 Ft. straight run for 4 Ducts high or less.
(b) 5 Ft. straight run for 5 Ducts high or more.

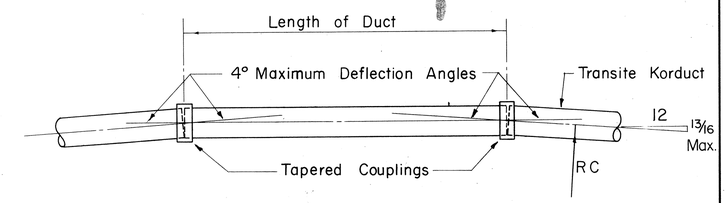

METHOD OF FORMING CURVES

Not to Scale

MINIMUM RADIUS TO FORM CURVES										
LENGTH OF DUCT	1'-0"	1'-6"	2'-0"	2'-6"	3'-0"	3'-6"	4'-0"	4'-6"	5'-0"	5'-6"
MIN. RAD. RC	14'-4"	21'-6"	28'-8"	35'-10"	42'-11"	50'-1"	57'-3"	64'-5"	71'-7"	78'-9"
LENGTH OF DUCT	6'-0"	6'-6"	7'-0"	7'-6"	8'-0"	8'-6"	9'-0"	9'-6"	10'-0"	
MIN. RAD. RC	85'-11"	93'-1"	100'-3"	107'-5"	114'-7"	121'-8"	128'-10"	136'-0"	143'-2"	

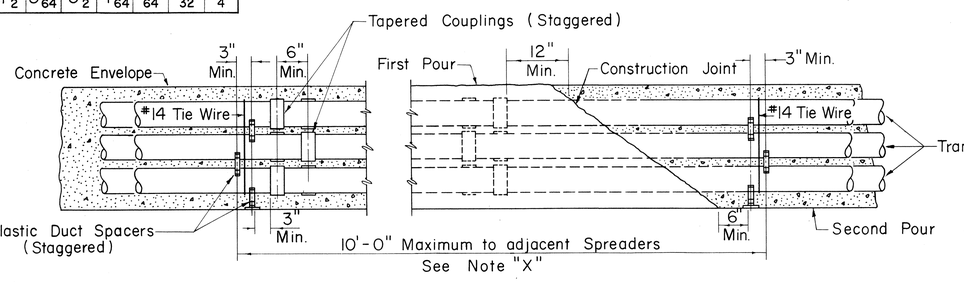

TYPICAL DUCT ENVELOPE ELEVATION

(6 WAY DUCT LINE SHOWN)

Not to Scale

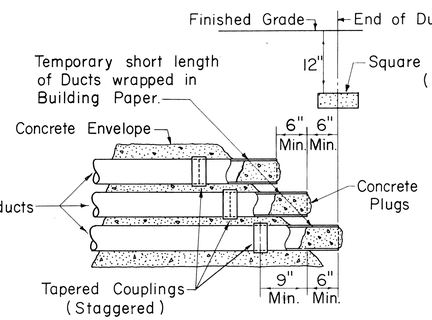

TYPICAL STUB OUT DETAIL

Not to Scale

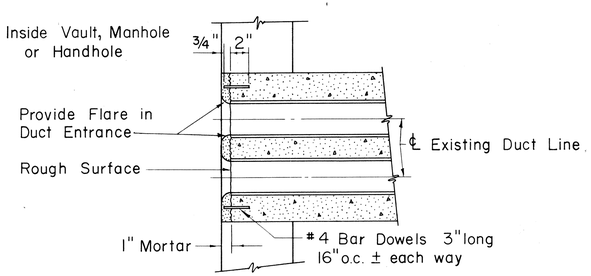

DUCT LINE ENTRANCE AT EXISTING DUCT LINE

Scale: 1 1/2" = 1'-0"

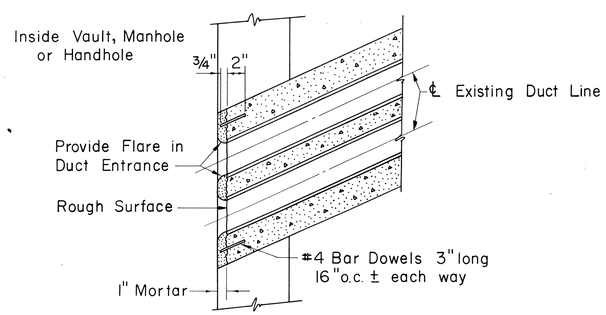

DUCT LINE DIAGONAL ENTRANCE

Scale: 1 1/2" = 1'-0"

APPROVED:

A D Henderson 3-15-68
HAWAIIAN ELECTRIC CO., INC. DATE

HECo., Inc. Drawing Number	
18585	SHEET No. 2 OF 2 SHEETS

STATE OF HAWAII
DEPARTMENT OF TRANSPORTATION
HIGHWAYS DIVISION

STANDARD DETAILS

CONSTRUCTION STANDARDS
TRANSITE KORDUCTS
UNDERGROUND DUCT LINES

Scales: As Noted Date March 1968

SHEET NO. 10 OF 11 SHEETS

53

FED. ROAD DIST. NO.	STATE	FED. AID PROJ. NO.	FISCAL YEAR	SHEET NO.	TOTAL SHEETS
HAWAII	HAW.	I-H1-1(42)	1968	54	59

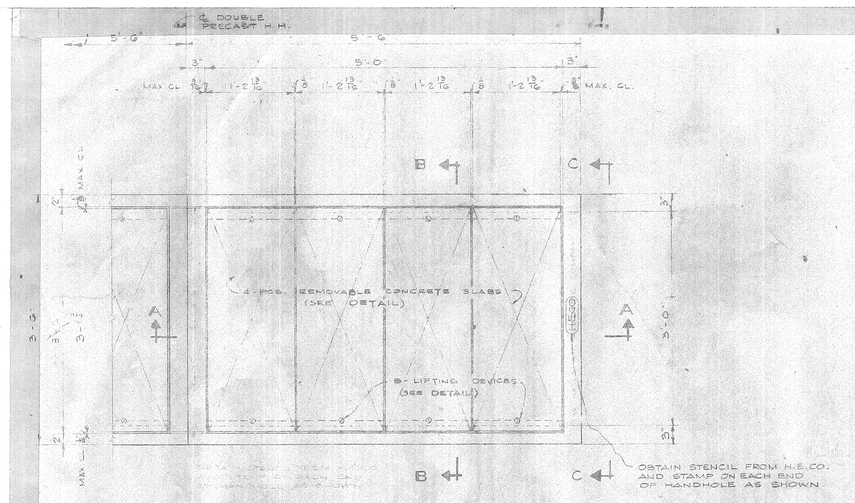

PLAN
1" = 1'-0"

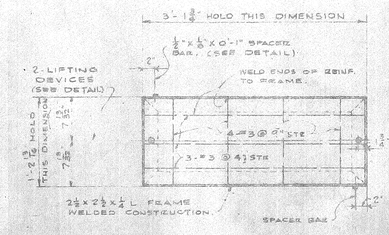

PLAN

SECTION

REMOVABLE CONCRETE SLAB
1" = 1'-0"

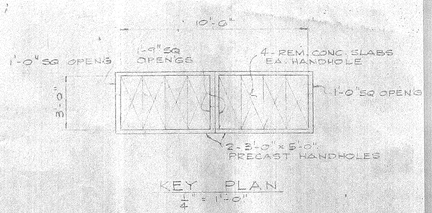

KEY PLAN
1/4" = 1'-0"

NOTE: DEPTH TO BE 3'-0". WINDOW OPENING TO BE 16" WIDE x 12" HIGH FOR 5" DUCT INSTALLATION.

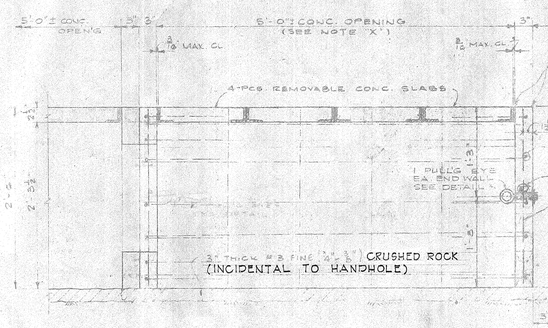

SECTION A-A
1" = 1'-0"

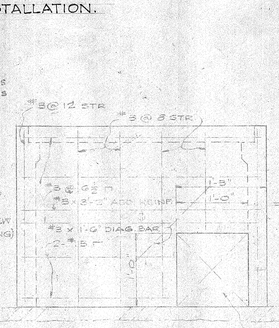

VIEW C-C
1" = 1'-0"

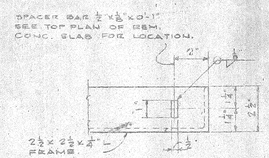

PART ELEV.

SPACER BAR DETAIL
3" = 1'-0"

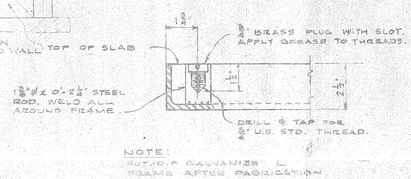

NOTE:
HOT-DIP GALVANIZE L FRAME AFTER FABRICATION.

LIFTING DEVICE DETAIL
3" = 1'-0"

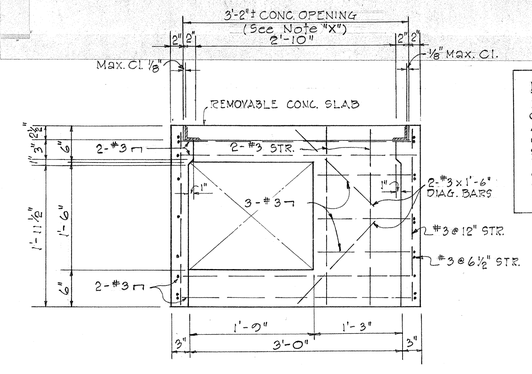

SECTION B-B
1" = 1'-0"

NOTE "X" - IMPORTANT

MAXIMUM CLEARANCES BETWEEN REMOVABLE CONCRETE COVER SLABS AND CONCRETE OPENING AT THE SUPPORTS MUST BE KEPT. CONCRETE CONTRACTOR SHALL MEASURE COVER SLAB STEEL FRAME AFTER FABRICATION TO OBTAIN PROPER CLEARANCES. ANY VARIATION IN CLEARANCES SHALL BE CORRECTED TO THE SATISFACTION OF THE ENGINEER AT CONTRACTOR'S EXPENSE.

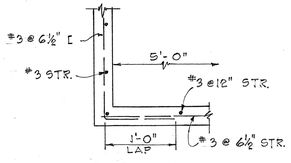

PLAN
CORNER REINF.
TYPICAL
1" = 1'-0"

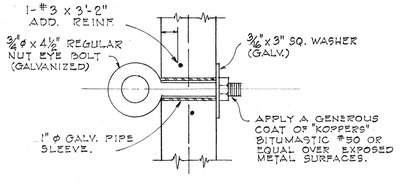

PULLING EYE DETAIL
3" = 1'-0"

GENERAL NOTES

HANDHOLE FABRICATION

1. CONCRETE STRENGTH:
   CONCRETE TO DEVELOP COMPRESSIVE CYLINDER STRENGTH OF 3000 PS.I. IN 28 DAYS.
2. CONCRETE FINISH:
   TOP OF HANDHOLE WOOD FLOATED (SIDEWALK FINISH) ACCORDING TO DIVISION OF HIGHWAYS, STATE OF HAWAII OR DIVISION OF ENGINEERING CITY & COUNTY OF HONOLULU SPECIFICATION WHICHEVER GOVERNS UNLESS OTHERWISE DIRECTED.
   ROUND ALL EXPOSED EDGES TO 3/8" RADIUS.
3. REINFORCING:
   ROUND DEFORMED BARS, NEW BILLET STOCK, INTERMEDIATE GRADE ASTM A15.
4. FINISH STEEL WORK:
   ANGLE IRON FRAMES, LIFTING DEVICES FOR REMOVABLE CONCRETE SLABS, AND PULLING EYE ATTACHMENTS SHALL BE HOT-DIP GALVANIZED AFTER FABRICATION.
5. ALL MATERIALS SHALL BE NEW AND MANUFACTURED IN THE UNITED STATES OF AMERICA.

HANDHOLE INSTALLATION

6. EXCAVATION:
   EXCAVATE FOR HANDHOLE TO ACCURATE ALINGNMENT, GRADES AND DIMENSIONS AS SHOWN ON DRAWINGS. ALL EXCAVATION MUST BE APPROVED BY THE ENGINEERING DEPT., HAWAIIAN ELECTRIC CO. INC. BEFORE INSTALLING PRECAST HANDHOLE.
7. INSTALLATION:
   PLACE HANDHOLE ON 3" THICK #3 FINE CRUSHED ROCK. TOP OF HANDHOLE TO BE LEVEL AND 1" ABOVE FINISH GRADE EXCEPT IN SIDEWALK AREAS WHERE TOP IS TO MATCH TOP OF SIDEWALK.
8. BACKFILL:
   REMOVE ALL DEBRIS BEFORE BACKFILLING. BACKFILL IN ACCORDANCE WITH LATEST SPECIFICATIONS OF AND SUBJECT TO APPROVAL OF DIV. OF HIGHWAYS, STATE OF HAWAII OR DIV. OF ENG., C&C OF HONOLULU WHICHEVER GOVERNS UNLESS OTHERWISE DIRECTED.

FOR USE IN AREAS NOT SUBJECT TO VEHICULAR TRAFFIC.

WEIGHT PER REMOVABLE COVER

REINF. & ANGLE FRAMES	= 38.0 LB.
CONCRETE	= 119.0 LB.
TOTAL	= 157.0 LB.

WEIGHT OF MATERIAL PER UNIT (EXCLUDING COVERS)

CONCRETE	=	1,675 LB. (.42 CU. YD.)
REINF. STEEL	=	59 LB. (157 L.F. OF #3)
TOTAL		1,734 LB.

APPROVED

A P Henderson 3-15-68
HAWAIIAN ELECTRIC CO., INC. DATE

No.	DATE	REVISIONS	BY	CHK'D	APP'D

DOUBLE PRECAST HANDHOLES

UNDERGROUND STANDARDS

DESIGNED S. Tarano | DRAWN | DATE 12-12-67 | SCALE AS NOTED
CHECKED | ELEC. | MECH. | STR. | H. | R.Y.
APPROVAL
ENGINEERING DEPARTMENT
HAWAIIAN ELECTRIC CO., INC.
HONOLULU, HAWAII
DRAWING NUMBER C-2378 | REVISION

SHEET No. 11 OF 11 SHEETS

ORIGINAL PLAN	SURVEY PLOTTED BY	DATE
	DRAWN BY	
	TRACED BY	
	DESIGNED BY	
NOTE BOOK	QUANTITIES BY	
No.	CHECKED BY	

PRINTED ON NO. 1000H CLEARPRINT

54