FED. ROAD DIST. NO.	STATE	FED. AID PROJ. NO.	FISCAL YEAR	SHEET NO.	TOTAL SHEETS
HAWAII	HAW.	I-HI-1(32):5 UNIT 3	1967	30R	00
		I-HI-1(22):5 UNIT 2	Revised: Mar. 11, 1968		

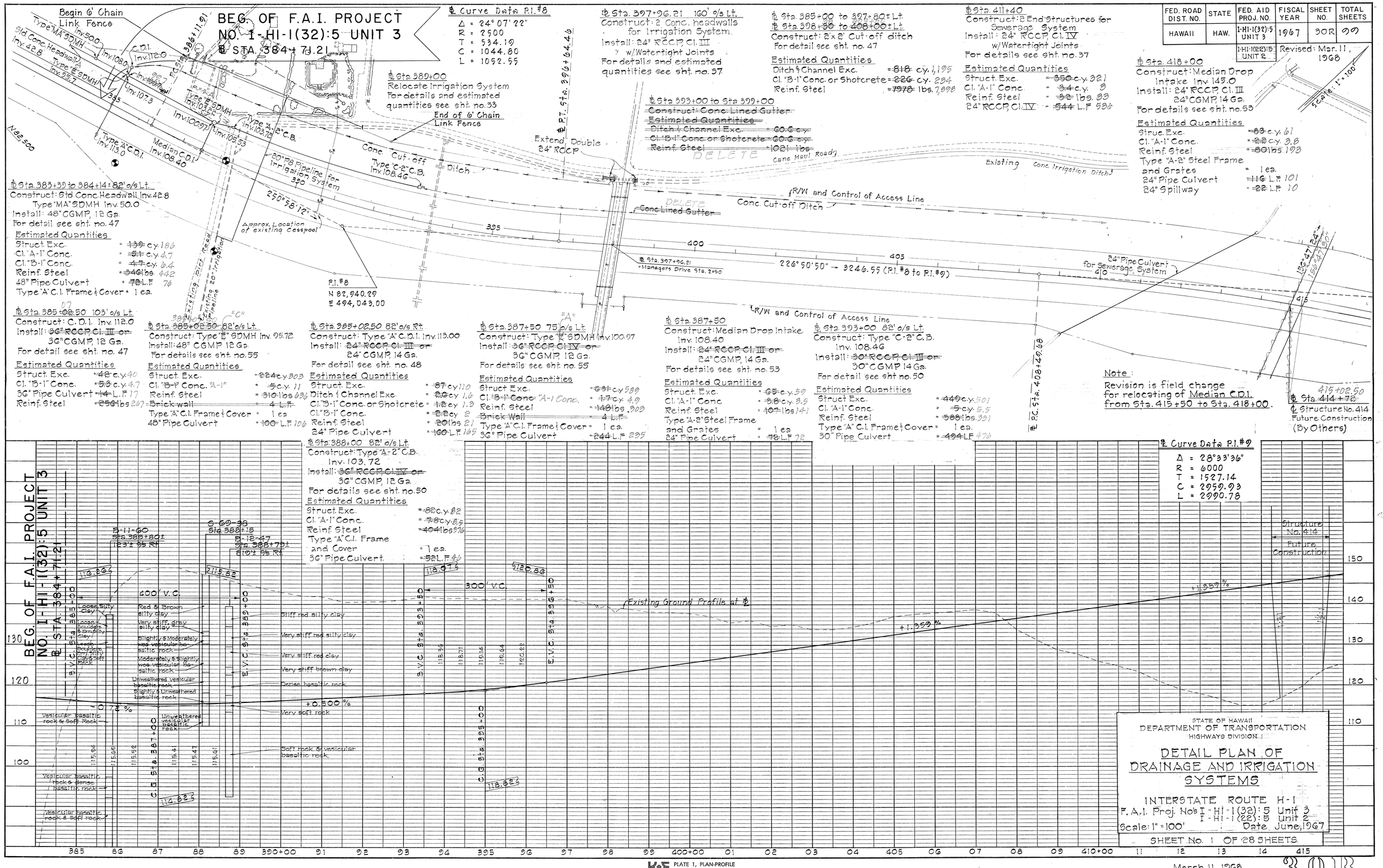

PLATE 1, PLAN-PROFILE
KEUFFEL & ESSER CO.

48 7012 IMPERIAL™ TRACING CLOTH

FED. ROAD DIST. NO.	STATE	FED. AID PROJ. NO.	FISCAL YEAR	SHEET NO.	TOTAL SHEETS
HAWAII	HAW.	I-H1-1(32):5 UNIT 3	1967	31 R	99
		I-H1-1(22):5 UNIT 2	Revised: Mar. 11, 1968		

℄ Sta. 415+85±
Construct inlet and outlet structure for Irrigation System.
Install: 48" Pipe Culvert
For detail, see sht. no. 38

Estimated Quantities

Struct. Exc.	= ~~695~~ c.y.	641
Ditch & Channel Exc.	= 1.0 c.y.	
Untreated Base for Pipe Foundation	= ~~316~~ c.y.	304
Cl. "A-1" Conc.	= ~~140~~ c.y.	12
48" RCCP Cl. III	= ~~185~~ L.F.	123
48" RCCP Cl. V	= ~~217~~ L.F.	218
Reinf. Steel	= ~~684~~ lbs.	775
Type "B" Trash Rack	1 ea.	

℄ Sta. 420+28±
Construct inlet and outlet structures for Irrigation System.
Install 42" RCCP, Cl. III
For detail, see sht. no. 39

Estimated Quantities

Struct. Exc.	= ~~730~~ c.y.	669
Ditch & Channel Exc.	= 0.5 c.y.	
Untreated Base for Pipe Foundation	= ~~294~~ c.y.	284
Cl. "A-1" Conc.	= ~~16.1~~ c.y.	12
Reinf. Steel	= ~~776~~ lbs.	997
42" Pipe Culvert	= ~~366~~ L.F.	366

418+75
℄ Sta. ~~425+50~~ to 436+00 Lt.
Construct 2'×2' Cutoff Ditch

Estimated Quantities

Ditch & Channel Exc.	= ~~389~~ c.y.	686
Cl. "B-1" Conc. or Shotcrete	= ~~107~~ c.y.	173
Reinf. Steel	= ~~3790~~ lbs.	5,838

℄ Sta. 436+50± to ~~441+00 Lt.±~~
~~℄ Sta. 442+00± to~~ 447+75 Lt.±
Construct 2'×1'-6" Cutoff Ditch

Estimated Quantities

Ditch & Channel Exc.	= ~~288~~ c.y.	315
Cl. "B-1" Conc. or Shotcrete	= ~~87~~ c.y.	100
Reinf. Steel	= ~~3020~~ lbs.	3,451

℄ Sta. 440+80 to 446+23 Rt.
Construct 2'×2' Irrigation Ditch

Estimated Quantities

Ditch & Channel Exc.	= ~~244~~ c.y.	248
Cl. "B-1" Conc. or Shotcrete	= ~~88~~ c.y.	85
Reinf. Steel	= ~~1000~~ lbs.	958

℄ Sta. 440+75 Rt.
Construct Type "A-2" C.B. Inv.=141.0
Install: 24" ~~RCCP, Cl. III or~~ 24" CGMP, 14 Ga.

Estimated Quantities

Struct. Exc.	= ~~78~~ c.y.	97
Cl. "A-1" Conc.	= ~~5.6~~ c.y.	8
Reinf. Steel	= ~~516~~ lbs.	480
Type "A-1" C.I. Frame & Cover	= 1 ea.	
24" Pipe Culvert	= ~~120~~ L.F.	128

℄ Sta. 436+75
Relocate existing 20" Irrigation Line and construct 4 Reaction Blocks.
For details and estimated quantities see sht. no. 40

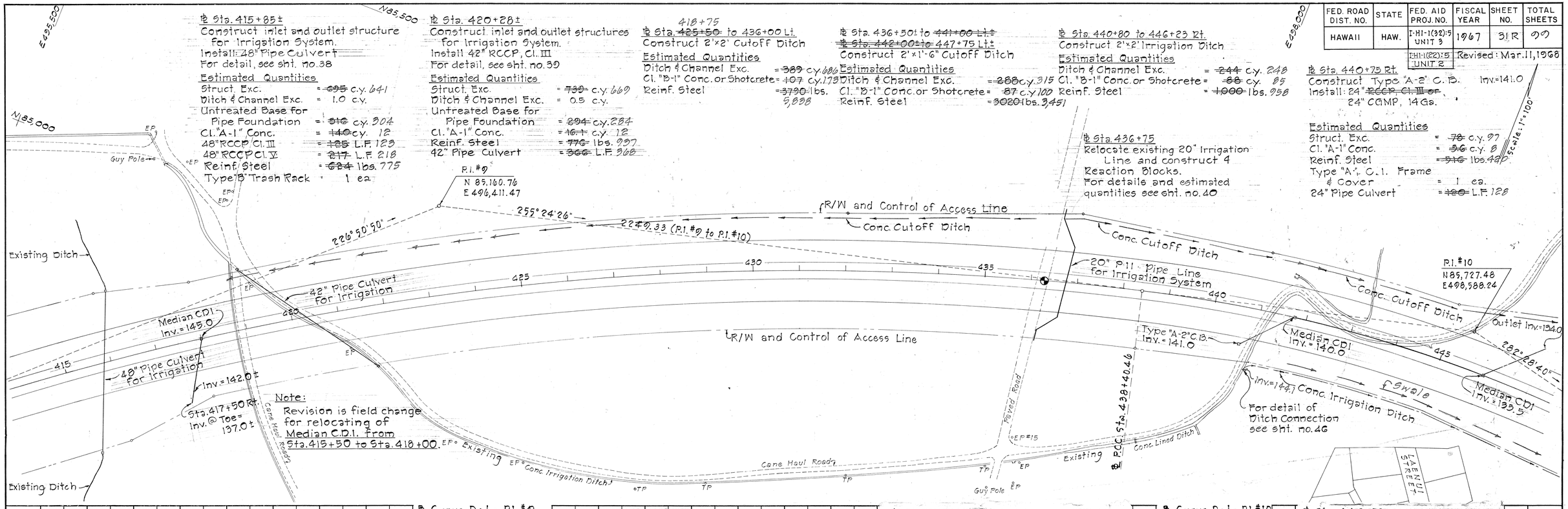

Note:
Revision is field change for relocating of Median C.D.I. from Sta. 415+50 to Sta. 418+00.

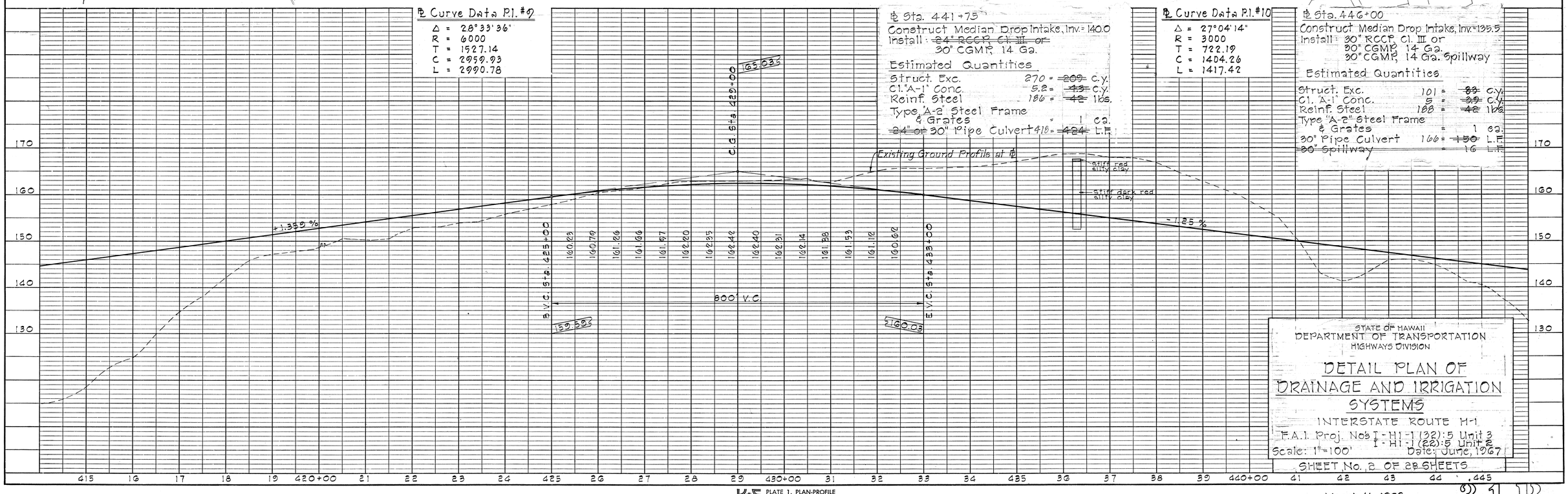

STATE OF HAWAII
DEPARTMENT OF TRANSPORTATION
HIGHWAYS DIVISION

DETAIL PLAN OF DRAINAGE AND IRRIGATION SYSTEMS

INTERSTATE ROUTE H-1
F.A.I. Proj. Nos. I-H1-1(32):5 Unit 3
I-H1-1(22):5 Unit 2
Scale: 1"=100' Date: June, 1967
SHEET No. 2 OF 28 SHEETS

PLAN — SURVEYED, PLOTTED, ALIGNMENT CHECKED, RT. OF WAY CHECKED, NOTE BOOK, NO., BY, DATE

PROFILE — SURVEYED, PLOTTED, GRADES CHECKED, B. M.'S NOTED, STRUCTURE NOTATIONS CH'KD, NOTE BOOK, NO., BY, DATE

K+E PLATE 1, PLAN-PROFILE KEUFFEL & ESSER CO.

March 11, 1968

31 R

48 7012 IMPERIAL™ TRACING CLOTH 26960

FED. ROAD DIST. NO.	STATE	FED. AID PROJ. NO.	FISCAL YEAR	SHEET NO.	TOTAL SHEETS
HAWAII	HAW.	I-HI-1(32):5 UNIT 3 I-HI-1(22):5 UNIT 2	1967	32	99

℄ Sta. 449+90
Construct: Median Drop Inlet
Inv. 134.60
Install ~~24" RCCP Cl. III or~~
24" CGMP, 14 Ga.
For details see sht. no. 53

Estimated Quantities

Struct. Exc.	= ~~18~~ c.y.	21
Cl. "A-1" Conc.	= ~~2.5~~ c.y.	2.8
Reinf. Steel	= ~~80~~ lbs	141
Type "A" Steel Frame and Grate	= 1 ea.	
24" Pipe Culvert	= ~~18~~ L.F.	24
24" Spillway	= ~~50~~ L.F.	42

℄ Sta. 451+60 to 454+90 Rt.
℄ Sta. 457+21 to ~~466+45 Rt.~~ 468+24
Construct: 2'x2' Irrigation Ditch
For details see sht. no. 44

Estimated Quantities

Ditch & Channel Exc.	= ~~558~~ c.y.	646
Cl. "B-1" Conc. or Shotcrete	= ~~200~~ c.y.	223
Reinf. Steel	= ~~2205~~ lbs	2,405

℄ Sta. 450+62
Construct: Conc. Lined Channel
Install: 54" RCCP, Cl. IV or
54" CGMP, 8 Ga.
For details and estimated quantities see sht. no. 42

℄ Sta. 451+60 to ~~456+00~~ 454+75 Lt.
℄ Sta. ~~456+25~~ 457+50 to 460+00 Lt.
Construct: 2'x1'-6" Cut-off Ditch

Estimated Quantities

Ditch & Channel Exc.	= ~~231~~ c.y.	150
Cl. "B-1" Conc. or Shotcrete	= ~~70~~ c.y.	45
Reinf. Steel	= ~~2424~~ lbs.	1,562

℄ Sta. 461+00 to ~~466+45.53 Lt.~~ 463+00
Construct: 2'x1'-6" Cut-off Ditch

Estimated Quantities

Ditch & Channel Exc.	= ~~1167~~ c.y.	56
Cl. "B-1" Conc. or Shotcrete	= ~~51~~ c.y.	1
Reinf. Steel	= ~~1750~~ lbs	576

℄ Sta. 449+22 Rt.
Construct: Junction Box for Irrigation System
For detail see sht. no. 44

Estimated Quantities

Struct. Exc.	= ~~2~~ c.y.	4
Cl. "B-1" Conc.	= ~~3~~ c.y.	3.5
Reinf. Steel	= ~~185~~ lbs.	277

℄ Sta. 446+23 to 450+00 Rt.
Construct: ~~3'x3'~~ Irrigation Ditch 5'x2'
For details see sht. no. 44

Estimated Quantities

Ditch & Channel Exc.	= ~~313~~ c.y.	466
Cl. "B-1" Conc. or Shotcrete	= ~~97~~ c.y.	89
Reinf. Steel	= ~~1060~~ lbs.	991

℄ Sta. 451+00 ± Rt.
Construct: Inlet & Outlet Structures
for Irrigation System
Install: 30" Siphon Pipe
For details see sht. no. 43

Estimated Quantities

Struct. Exc.	= ~~193~~ c.y.	217
Cl. "A-1" Conc.	= ~~21.2~~ c.y.	1,866
Reinf. Steel	= ~~1824~~ lbs.	
Trash Rack	= 1 ea.	
30" Siphon Pipe	= ~~150~~ L.F.	147

℄ Sta. ~~460+49~~ 462
Construct: Inlet & Outlet Structures
Install: 2-84" Sectional Plate Pipe, 12 Ga.
For details and estimated quantities see sht. no. 49

Outb. ℄ Sta. ~~466+50~~ 466+45.53
End of Roadway Grading

END OF F.A.I. PROJECT
NO. I-HI-1(32):5 UNIT 3
℄ STA. 466+45.53

For connection of ditch at
End of Project, see sht. no. 46
Tie into existing ditch Sta.
468+35 Existg. Inv. = 115.04

℄ Curve Data P.I. #10

Δ =	27° 04' 14"
R =	3000
T =	722.19
C =	1404.26
L =	1417.42

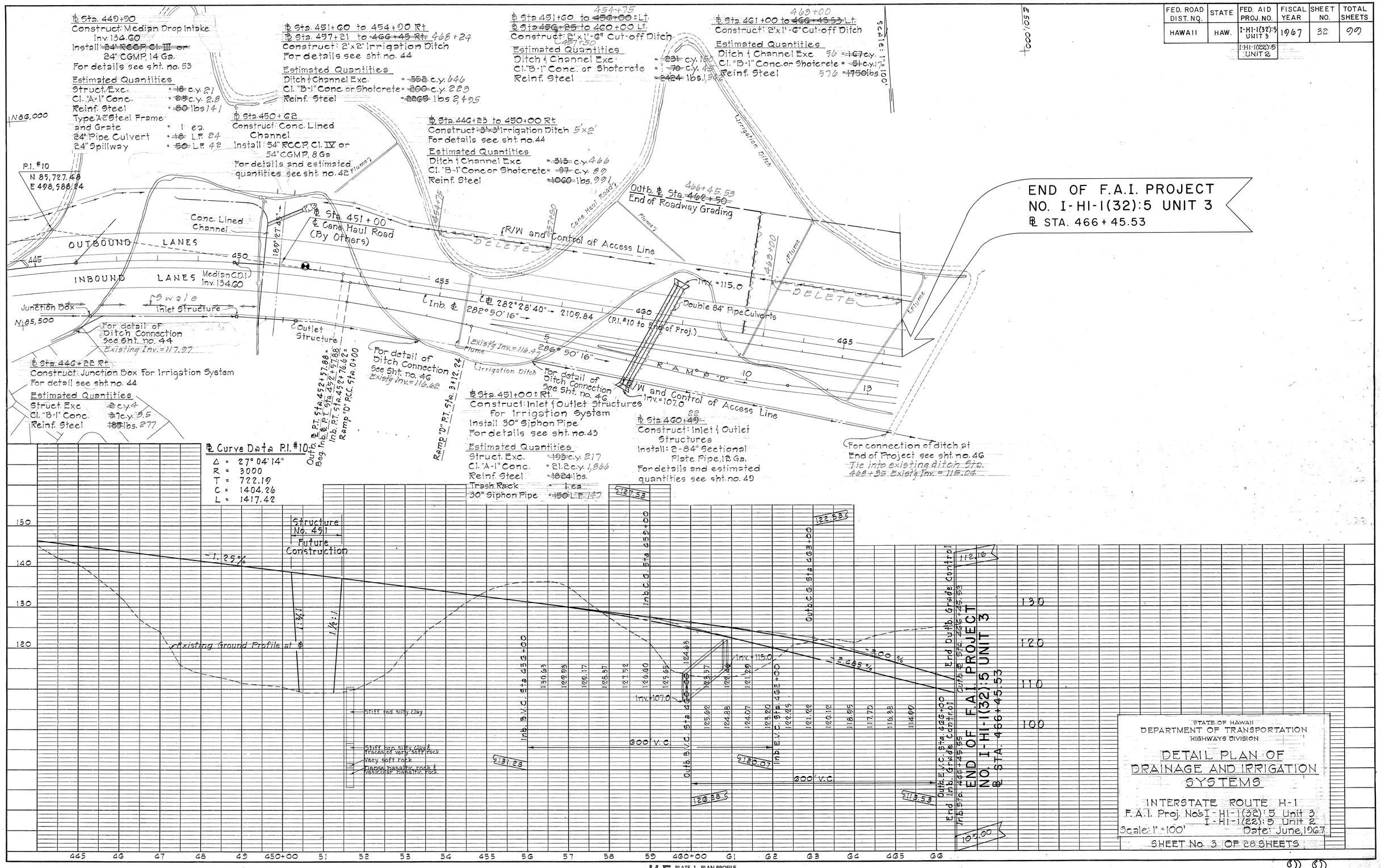

STATE OF HAWAII
DEPARTMENT OF TRANSPORTATION
HIGHWAYS DIVISION

DETAIL PLAN OF
DRAINAGE AND IRRIGATION
SYSTEMS

INTERSTATE ROUTE H-1
F.A.I. Proj. No. I-HI-1(32):5 Unit 3
I-HI-1(22):5 Unit 2
Scale: 1" = 100'
Date: June, 1967

SHEET No. 3 OF 28 SHEETS

PLAN — SURVEYED, PLOTTED, ALIGNMENT CHECKED, RT. OF WAY CHECKED, NOTE BOOK, NO., BY, DATE

PROFILE — SURVEYED, PLOTTED, GRADES CHECKED, B.M.'S NOTED, STRUCTURE NOTATIONS CH'KD, NOTE BOOK, NO., BY, DATE

FED. ROAD DIST. NO.	STATE	FED. AID PROJ. NO.	FISCAL YEAR	SHEET NO.	TOTAL SHEETS
HAWAII	HAW.	I-H1-1(22)5 Unit 2	1967	33	000

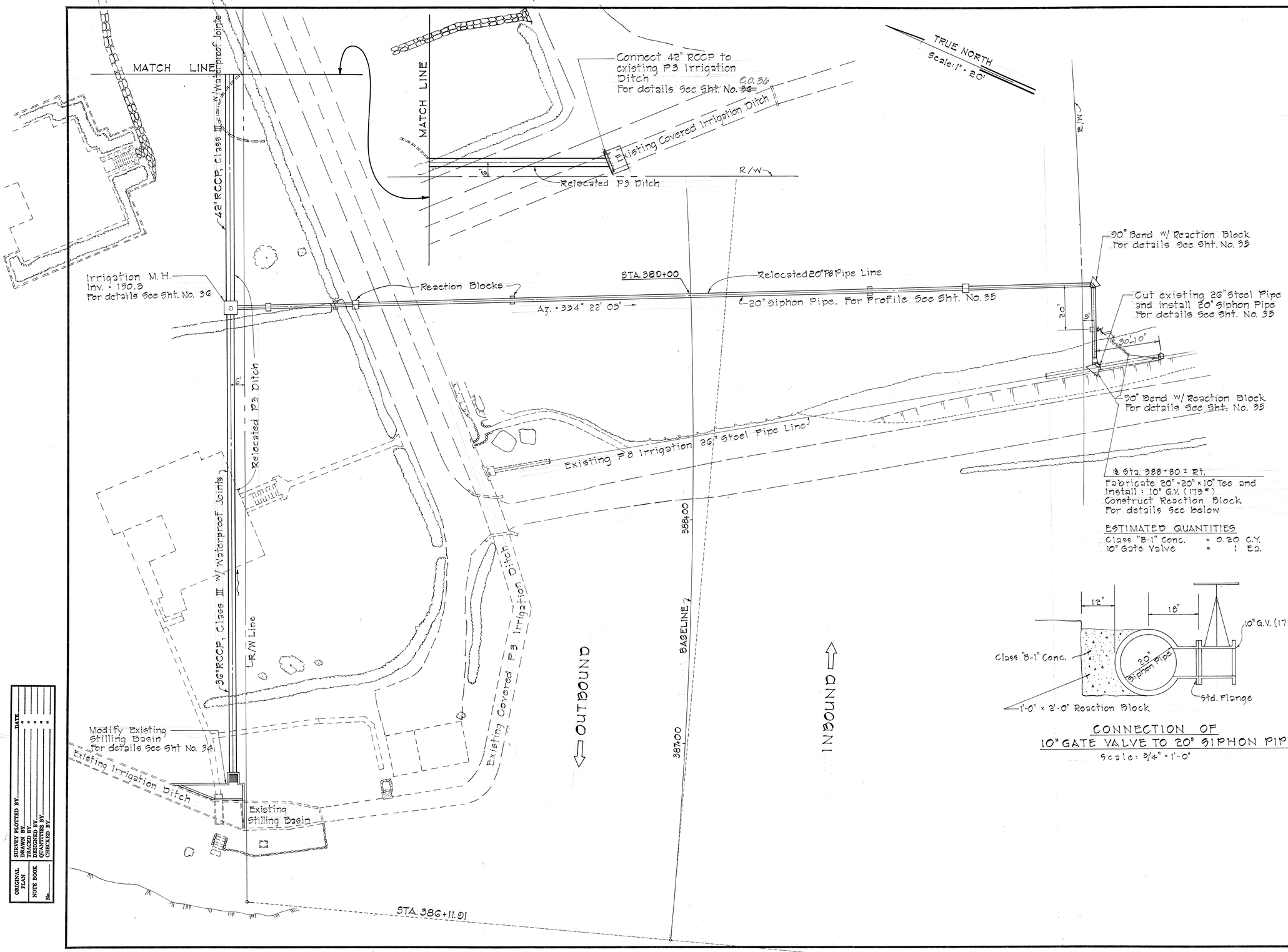

℄ STA. 389+00 Lt. to 391+15 ± Lt.
Construct Irrigation M.H.
Install: 42" RCCP, Cl. III, W/ Watertight Joints
Connect to existing P3 Ditch
For details see sht. no. ~~36~~ C.O. 36

ESTIMATED QUANTITIES

Structure Exc.	= ~~290.7~~	C.Y. 243
Class "A-1" Concrete	= ~~5.6~~	C.Y. 9.1
Reinf. Steel	= ~~125~~	Lbs. 1401
Type "A" Cast Iron Frame & Cover	= 1	Ea.
42" Pipe Culvert	= ~~182~~	L.F. 195

℄ STA. 389+00
Construct Reaction Blocks
Install: 20" Siphon Pipe
For details see sht. no. 35

ESTIMATED QUANTITIES

Structure Exc.	= ~~283~~	C.Y. 293
Untreated Base for Pipe Foundation	= ~~20.6~~	C.Y. 1684
Class "B-1" Concrete	= ~~10~~	C.Y. 12.9
Reinf. Steel	= ~~136~~	Lbs. 187
20" Siphon Pipe	= ~~420~~	L.F. 445
~~GRP~~	= ~~19~~	~~C.Y.~~

℄ STA. 386+65 ± Lt. to 389+00 Lt.
Modify Existing Irrigation Stilling Basin
Install: 36" RCCP, W/ Watertight Joints
For details see sht. no. 34

ESTIMATED QUANTITIES

Structure Exc.	= ~~319~~	C.Y. 356
Class "A-1" Concrete	= ~~15.7~~	C.Y. 15.6
Reinf. Steel	= ~~805~~	Lbs. 984
Trash Rack	= 1	Ea.
36" Pipe Culvert	= ~~206~~	L.F. 207

℄ Sta. 388+80 ± Rt.
Fabricate 20" × 20" × 10" Tee and install: 10" G.V. (175#)
Construct Reaction Block
For details See below

ESTIMATED QUANTITIES

Class "B-1" Conc.	= 0.20	C.Y.
10" Gate Valve	= 1	Ea.

CONNECTION OF
10" GATE VALVE TO 20" SIPHON PIPE
Scale: 3/4" = 1'-0"

Note:
1. Fabrication of 20" × 20" × 10" Tee shall be incidental to the 20" Siphon Pipe.
2. 10" G.V. shall comply to AWWA Standard C 500 of latest revision.

ORIGINAL PLAN		DATE
	SURVEY PLOTTED BY	
	DRAWN BY	
	TRACED BY	
NOTE BOOK	DESIGNED BY	
	QUANTITIES BY	
No.	CHECKED BY	

STATE OF HAWAII
DEPARTMENT OF TRANSPORTATION
HIGHWAYS DIVISION

IRRIGATION SYSTEM
RELOCATION OF PUMP #3 DITCH & PUMP #8 PIPE LINE

INTERSTATE ROUTE H-1
F.A.I. PROJ. NO. I-H1-1(22):5 Unit 2

Scale: As Shown Date: June, 1967

SHEET No. 4 OF 28 SHEETS

PRINTED ON NO. 1000H CLEARPRINT

FED. ROAD DIST. NO.	STATE	FED. AID PROJ. NO.	FISCAL YEAR	SHEET NO.	TOTAL SHEETS
HAWAII	HAW.	I-HI-1(22)5 Unit 2	1967	34R	00

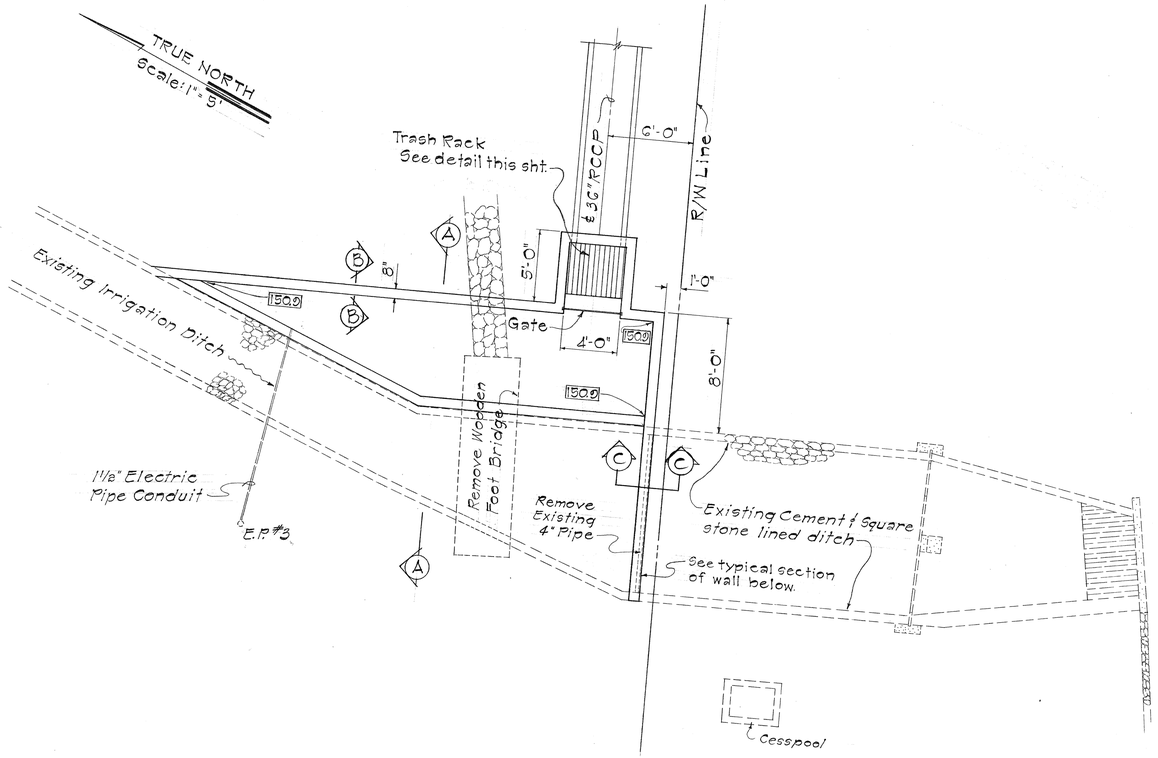

PLAN
Scale: 1" = 5'

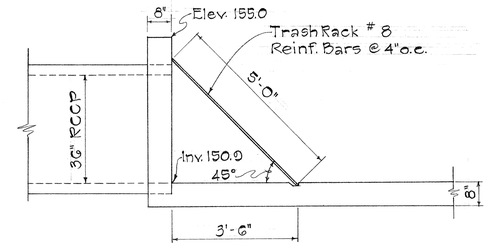

ELEVATION
Scale: 1/2" = 1'-0"

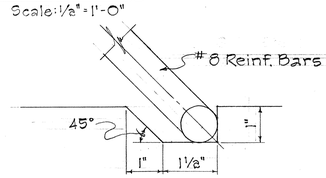

DETAIL OF SLOT FOR TRASH RACK
Half Size

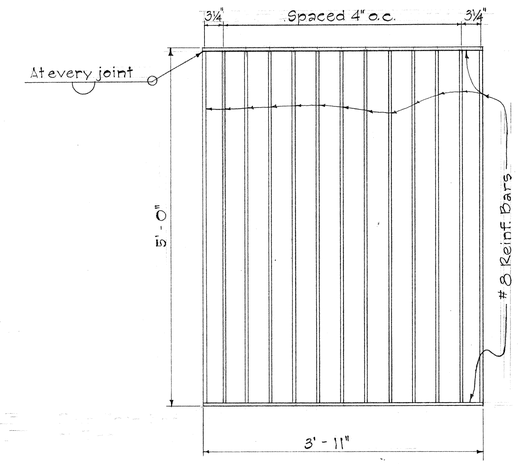

PLAN
Scale: 1" = 1'-0"

DETAIL OF TYPE "A" TRASH RACK
Scale: As Shown

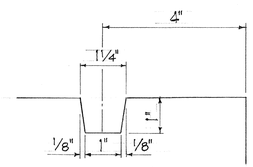

TYPICAL SLOT DETAIL FOR GATE
Half Size

NOTE:
Redwood gate shall be constructed with 545 lumber and galvanized nails, and shall be considered as incidental to Class "B-1" Concrete.

Wooden Gate Table:

Sta.	H	W
386+65±	4'-0"	4'-1½"
450+00	2'-0"	5'-1½"
466+30	2'-0"	3'-1½"

REVISED April 1, 1968

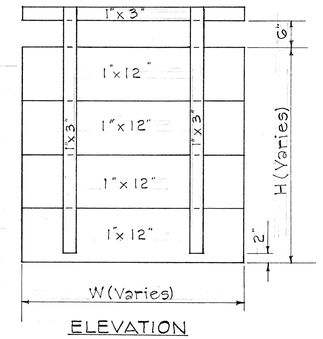

ELEVATION

TYPICAL DETAIL OF WOODEN GATE
Scale: ¾" = 1'-0"

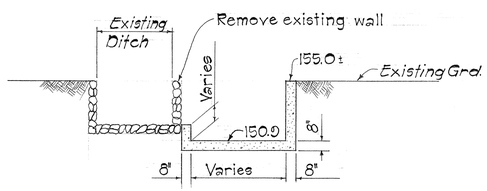

SECTION "A-A"
Scale: 1" = 5'

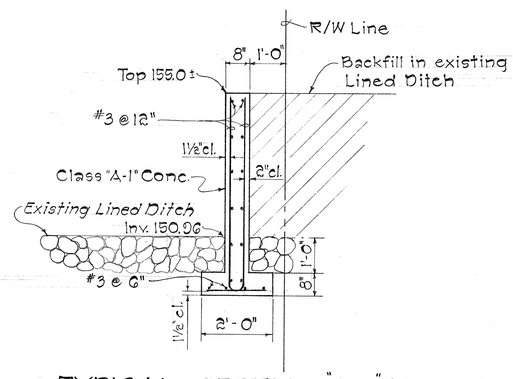

TYPICAL SECTION "C-C" OF CONC. WALL IN LINED DITCH
Scale: 1/2" = 1'-0"

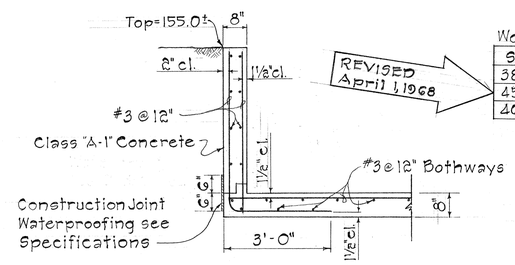

SECTION "B-B"
Scale: 1/2" = 1'-0"

DETAILS OF STILLING BASIN AT STA. 386+65 ± LT.

ORIGINAL PLAN	SURVEY PLOTTED BY	DATE
	TRACED BY	
	DESIGNED BY	
NOTE BOOK	QUANTITIES BY	
No.	CHECKED BY	

STATE OF HAWAII
DEPARTMENT OF TRANSPORTATION
HIGHWAYS DIVISION

IRRIGATION DETAILS
RELOCATION OF P3 DITCH
MODIFICATION OF EXISTING STILLING BASIN @ ℄ STA. 386+65 ± Lt.

INTERSTATE ROUTE H-1
F.A.I. PROJ. NO. I-HI-1(22):5, Unit 2

Scale: As Shown — Date: June, 1967

SHEET No. 5 OF 28 SHEETS

April 1, 1968

34R

PRINTED ON NO. 1000H CLEARPRINT

FED. ROAD DIST. NO.	STATE	FED. AID PROJ. NO.	FISCAL YEAR	SHEET NO.	TOTAL SHEETS
HAWAII	HAW.	I-H1-1(22):5 Unit 2	1967	35	99

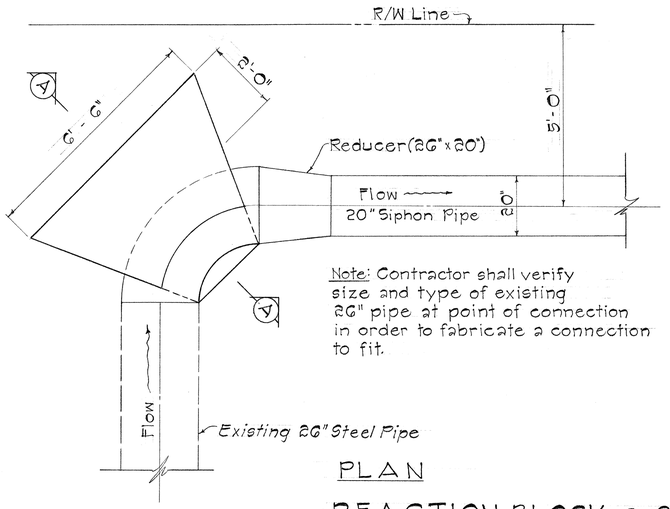

Note: Contractor shall verify size and type of existing 26" pipe at point of connection in order to fabricate a connection to fit.

PLAN

REACTION BLOCK @ STA. 388+63± RT.

Scale: 1/2" = 1'-0"

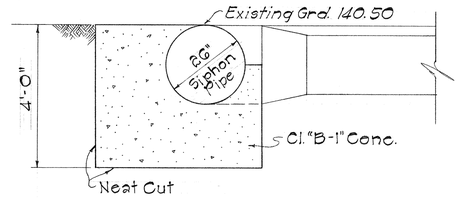

SECTION "A-A"

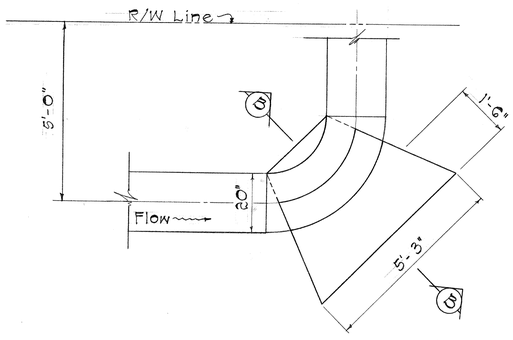

PLAN

REACTION BLOCK @ STA. 389+00 RT.

Scale: 1/2" = 1'-0"

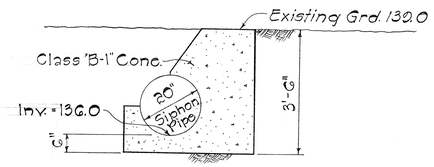

SECTION "B-B"

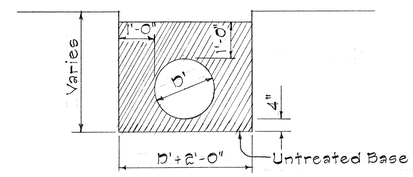

DETAIL OF UNTREATED BASE FOR PIPE FOUNDATION

Scale: 1/2" = 1'-0"

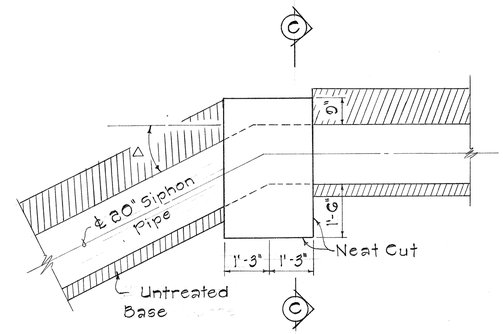

ELEVATION

TYPICAL DETAIL OF REACTION BLOCK AT VERTICAL CROWN BEND FOR 20" PIPE

Scale: 1/2" = 1'-0"

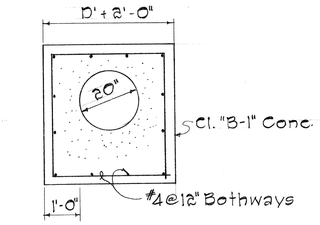

SECTION "C-C"

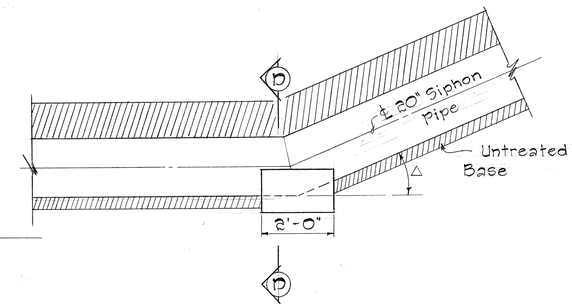

ELEVATION

TYPICAL DETAIL OF REACTION BLOCK AT VERTICAL SAG BEND FOR 20" PIPE

Scale: 1/2" = 1'-0"

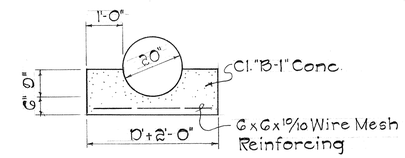

SECTION "D-D"

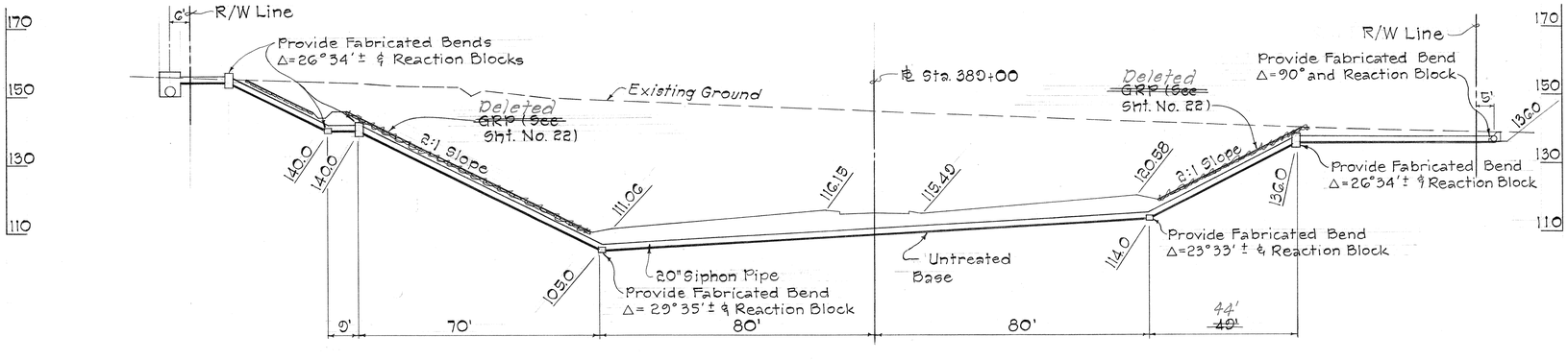

PROFILE ~ 20" P-8 PIPE LINE @ STA. 389+00

Scale: 1" = 20'

ORIGINAL PLAN		DATE
	SURVEY PLOTTED BY	
	DRAWN BY	" "
	TRACED BY	" "
	DESIGNED BY	" "
NOTE BOOK	QUANTITIES BY	" "
No.	CHECKED BY	" "

STATE OF HAWAII
DEPARTMENT OF TRANSPORTATION
HIGHWAYS DIVISION

IRRIGATION DETAILS
RELOCATION OF 20"P8-PIPE LINE
AT ℄ STA. 389 + 00

INTERSTATE ROUTE H-1
F.A.I. PROJ. NO. I-H1-1(22):5, Unit 2

Scale: As Shown Date: June, 1967

SHEET No. 6 OF 28 SHEETS

35

PRINTED ON NO. 1000H CLEARPRINT

FED. ROAD DIST. NO.	STATE	FED. AID PROJ. NO.	FISCAL YEAR	SHEET NO.	TOTAL SHEETS
HAWAII	HAW.	I-H1-1(22):5 Unit 2	1967	C0.36	99

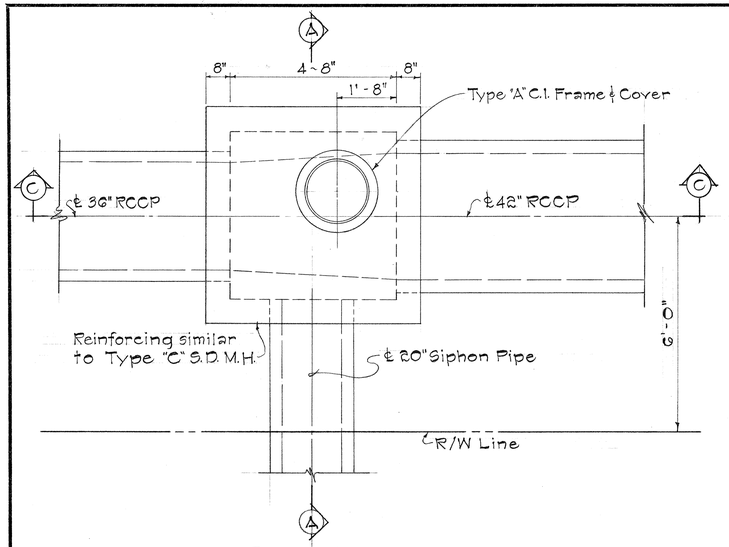

PLAN

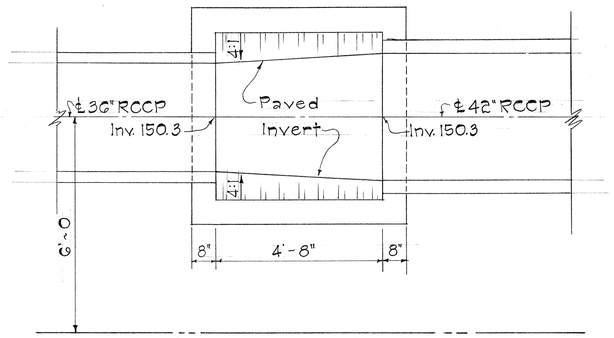

SECTION "B-B"

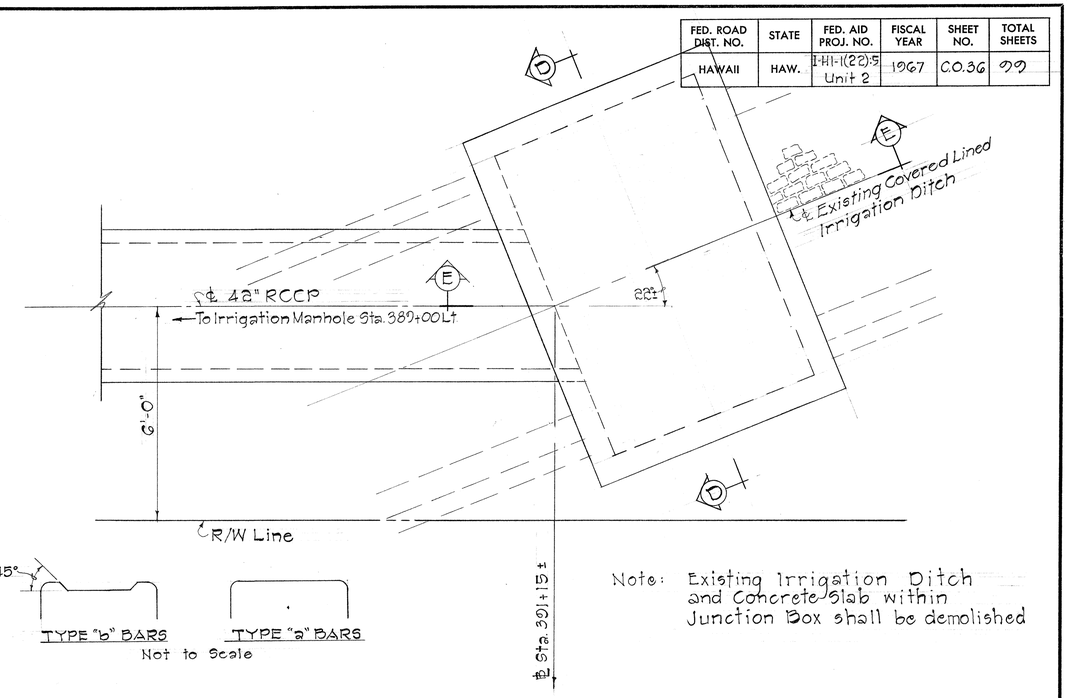

PLAN

Not to Scale

Note: Existing Irrigation Ditch and Concrete Slab within Junction Box shall be demolished

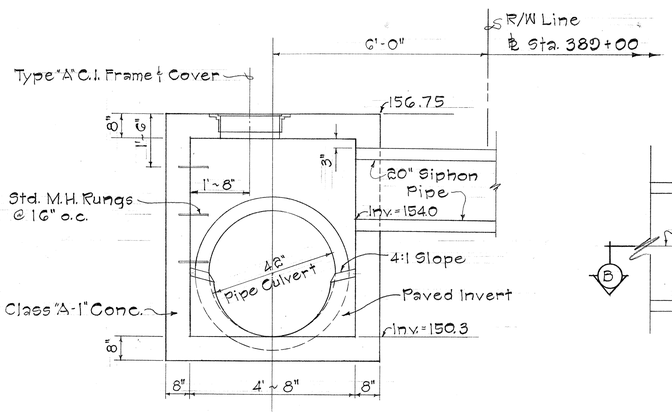

SECTION "A-A"

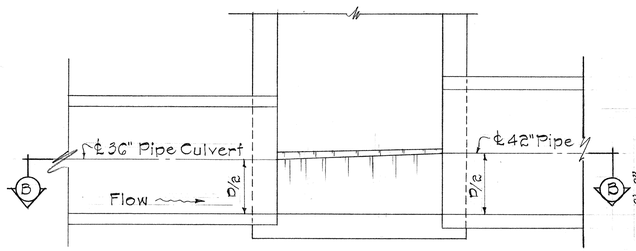

SECTION "C-C"

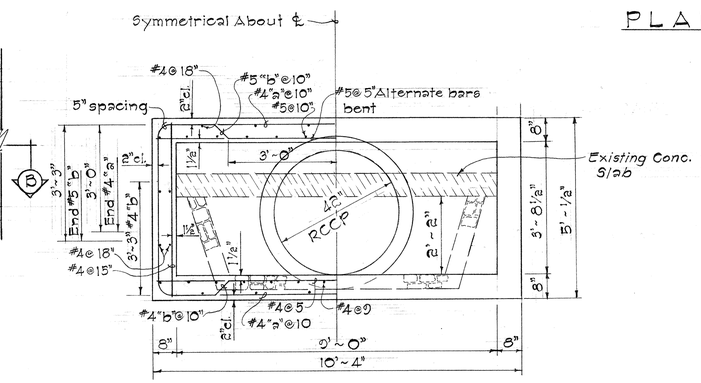

SECTION "D-D"

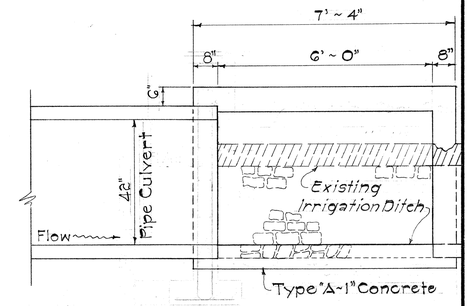

SECTION "E-E"

DETAILS OF IRRIGATION MANHOLE AT STA. 389+00 Lt.

Scale: 1/2" = 1'-0"

DETAIL OF CONNECTION OF 42" PIPE CULVERT TO EXISTING PUMP #3 DITCH AT STA. 391+15± LT.

Scale: 1/2" = 1'-0"

ORIGINAL PLAN	
	SURVEY PLOTTED BY
	DRAWN BY
	TRACED BY
NOTE BOOK	DESIGNED BY
	QUANTITIES BY
No.	CHECKED BY
	DATE

STATE OF HAWAII
DEPARTMENT OF TRANSPORTATION
HIGHWAYS DIVISION

IRRIGATION DETAILS
RELOCATION OF P3 DITCH
M.H. @ ℄ STA. 389+00 Lt. AND
CONN. OF 42" RCCP TO EXISTING
P3 DITCH @ ℄ STA. 391+15± Lt.

INTERSTATE ROUTE H-1
F.A.I. PROJ. NO. I-H1-1(22):5 Unit 2

Scale: As Shown Date: June, 1967

SHEET No. 7 OF 28 SHEETS

April 2, 1968

C036

PRINTED ON NO. 1000R CLEARPRINT

FED. ROAD DIST. NO.	STATE	FED. AID PROJ. NO.	FISCAL YEAR	SHEET NO.	TOTAL SHEETS
HAWAII	HAW.	I-H1-1(22)5 Unit 2	1967	37	99

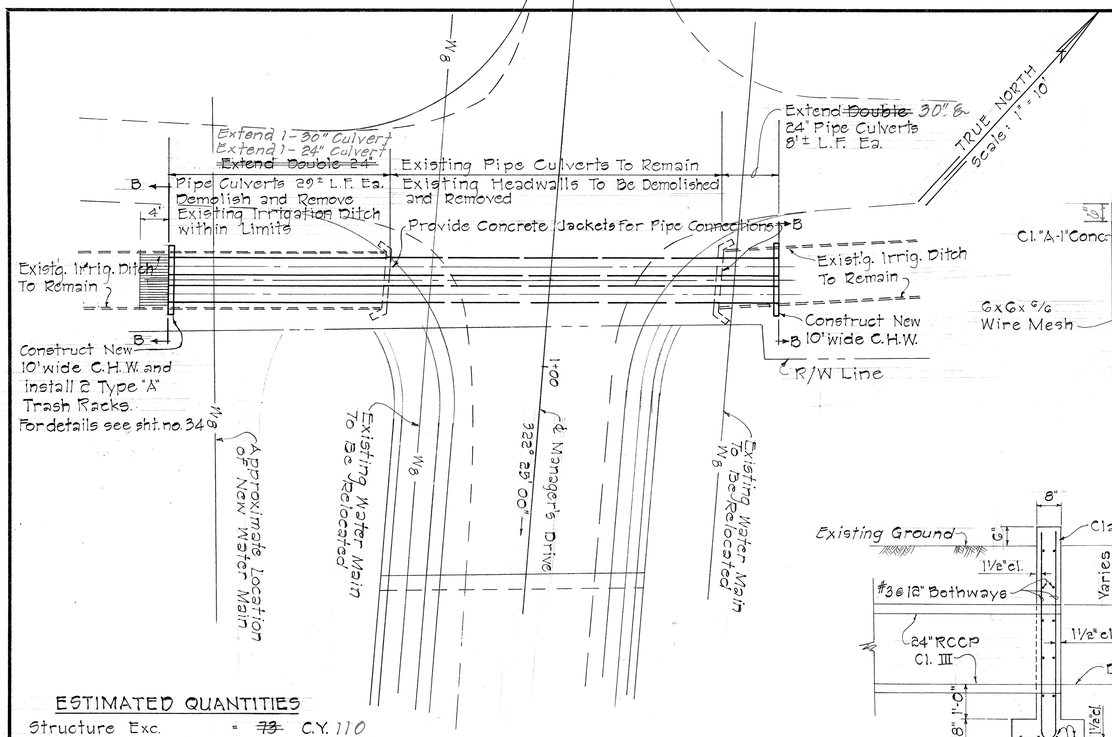

PLAN
Scale: 1" = 10'

ESTIMATED QUANTITIES

Structure Exc.	=	~~73~~	C.Y. 110
Class "A-1" Concrete	=	~~24.0~~	C.Y. 22.4
Reinf. Steel	=	~~770~~	Lbs. 705
24" RCCP, Cl. III	=	~~96~~	L.F. 42
Type "A" Trash Rack	=	2	Ea.
30" RCCP, Class III		39	L.F.

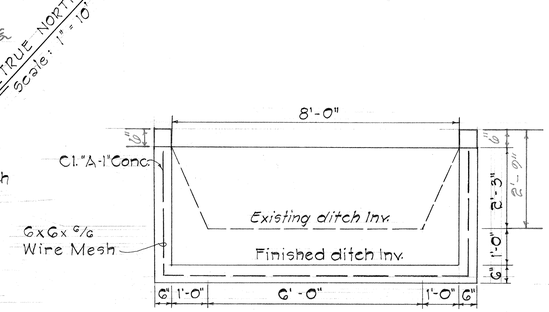

SECTION "B-B"
Scale: 1/2" = 1'-0"

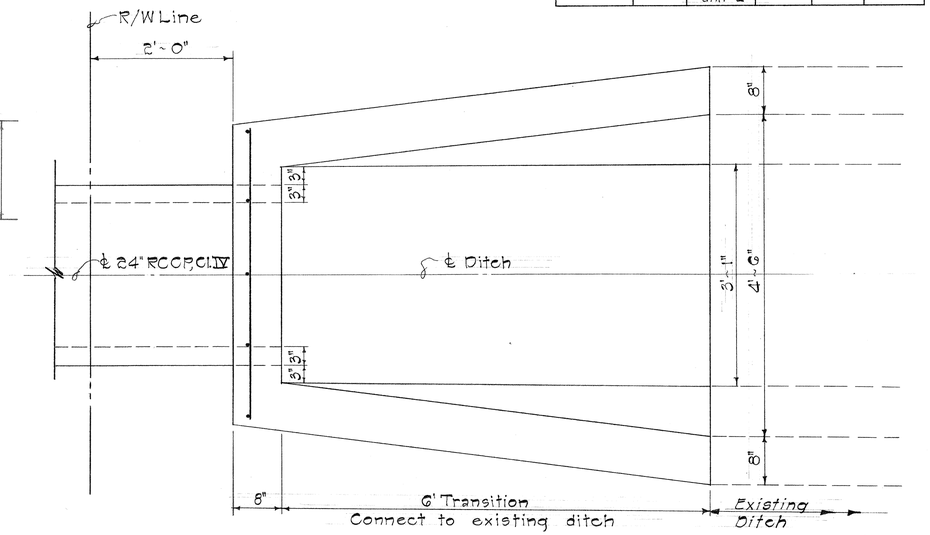

PLAN

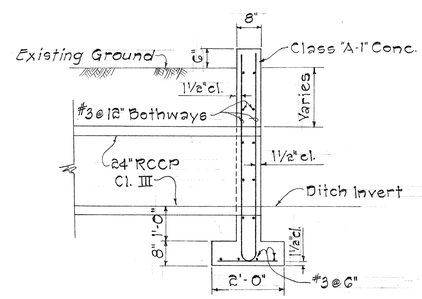

TYPICAL DETAIL OF CONC. HEADWALL FOR EXTENSION OF 24" PIPE CULVERTS
Scale: 1/2" = 1'-0"

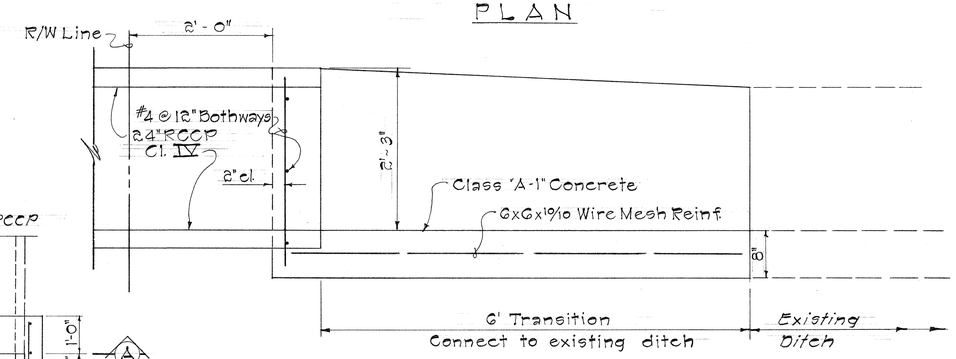

PROFILE

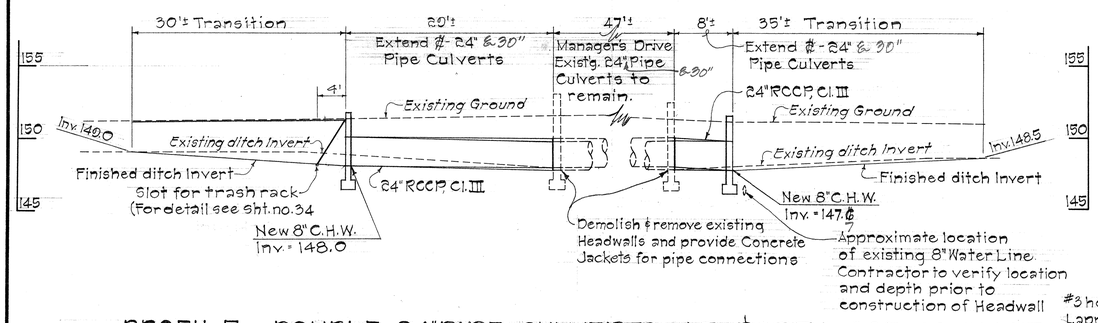

PROFILE ~ DOUBLE 24" PIPE CULVERTS AT ℄ STA. 397+96.21 LEFT
Scale: Horiz. 1" = 10'
Vert. 1" = 5'

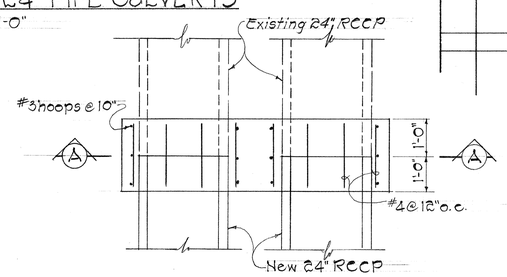

PLAN

Note: Inverts of End Structures to be determined in the field by the Engineer.

TYPICAL DETAILS OF INLET AND OUTLET STRUCTURES FOR CULVERT AT STA. 411+40
Scale: 1" = 1'-0"

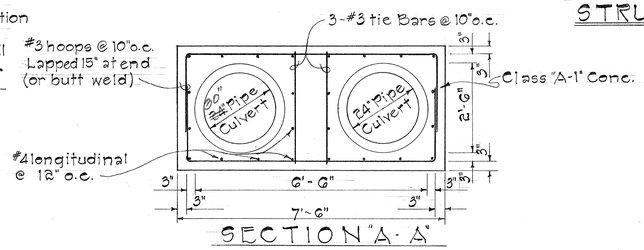

SECTION "A-A"

DETAIL OF CONCRETE JACKET
Scale: 1/2" = 1'-0"

DETAILS OF EXTENSION OF DOUBLE 24" PIPE CULVERTS AT ℄ STA. 397+96.21 LEFT
Scale: As Shown

STATE OF HAWAII
DEPARTMENT OF TRANSPORTATION
HIGHWAYS DIVISION

IRRIGATION DETAILS
EXTENSION OF DOUBLE 24" PIPE CULVERTS AT ℄ STA. 397+96.21 Lt.
INLET & OUTLET STRUCTURES AT ℄ STA. 411+40
INTERSTATE ROUTE H-1
F.A.I. PROJ. NO. I-H1-1(22)5 Unit 2
Scale: As Shown Date: June, 1967

SHEET No. 8 OF 28 SHEETS

ORIGINAL PLAN | SURVEY PLOTTED BY | DRAWN BY | TRACED BY | DESIGNED BY | QUANTITIES BY | CHECKED BY | DATE | NOTE BOOK No.

PRINTED ON NO. 1000H CLEARPRINT

FED. ROAD DIST. NO.	STATE	FED. AID PROJ. NO.	FISCAL YEAR	SHEET NO.	TOTAL SHEETS
HAWAII	HAW.	I-HI-1(22):5 Unit 2	1967	38	99

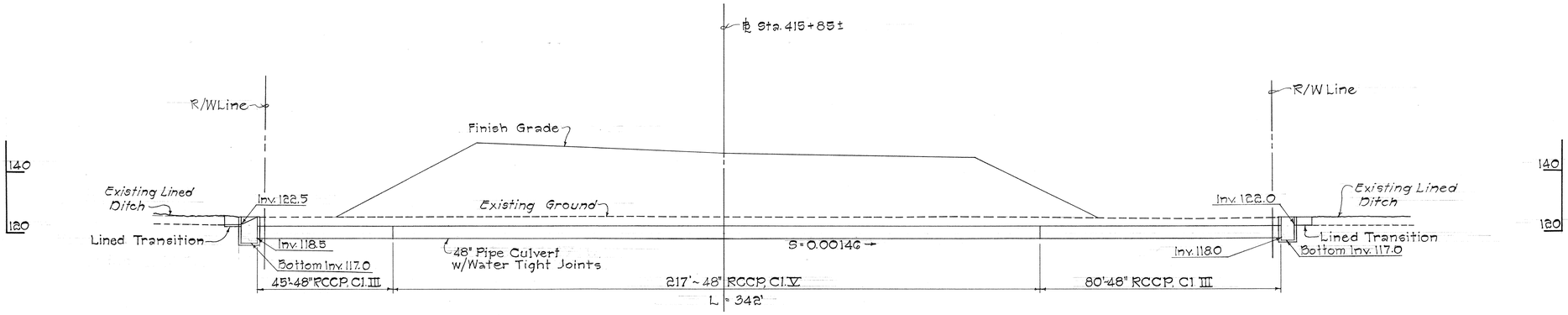

PROFILE OF 48" SIPHON @ ℄ STA. 415+85±

Scale: 1" = 20'

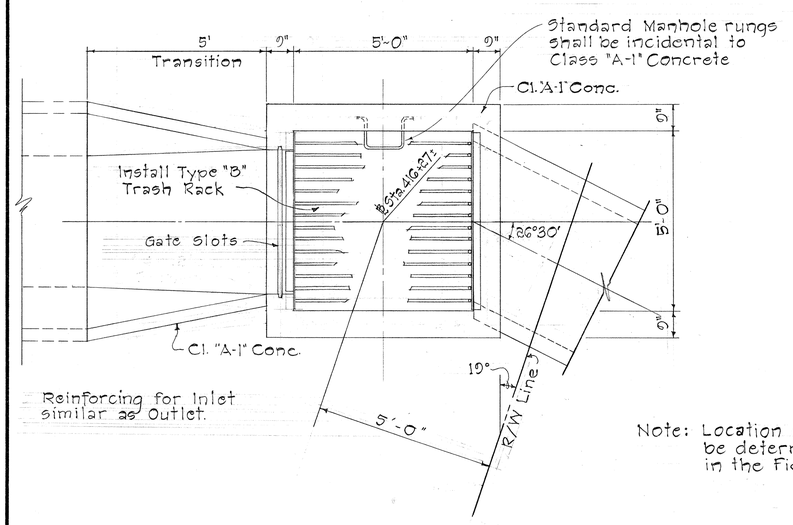

DETAIL OF INLET FOR SIPHON

Scale: ½" = 1'-0"

Note: Location of manhole rungs shall be determined by the Engineer in the Field.

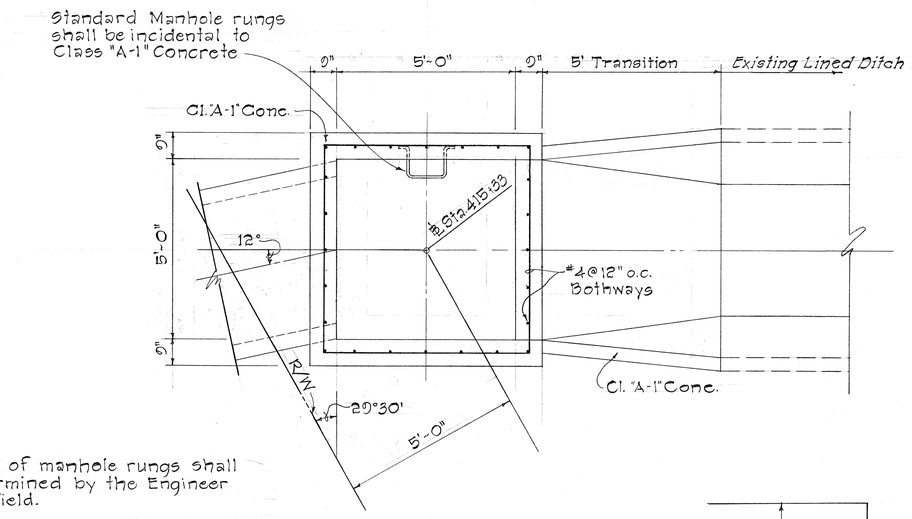

DETAIL OF OUTLET FOR SIPHON

Scale: ½" = 1'-0"

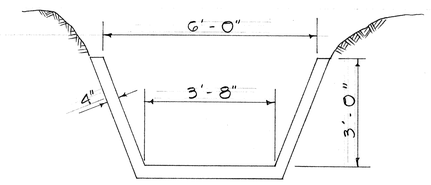

TYPICAL SECTION AT CONNECTION TO EXISTING LINED DITCH

Scale: ½" = 1'-0"

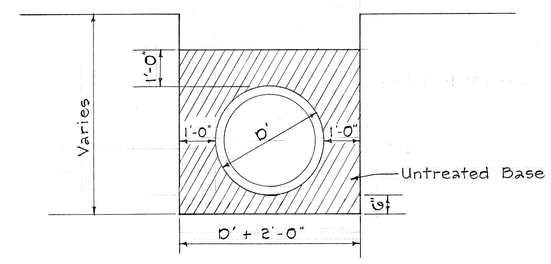

DETAIL OF UNTREATED BASE FOR PIPE FOUNDATION

Scale: ½" = 1'-0"

DETAILS OF 48" IRRIGATION SIPHON AT ℄ STA. 415 + 85±

ORIGINAL PLAN	SURVEY PLOTTED BY	DATE
	DRAWN BY	
	TRACED BY	
NOTE BOOK	DESIGNED BY	
	QUANTITIES BY	
No.	CHECKED BY	

STATE OF HAWAII
DEPARTMENT OF TRANSPORTATION
HIGHWAYS DIVISION

IRRIGATION DETAILS

48" IRRIGATION SIPHON AT ℄ STA. 415+85±

INTERSTATE ROUTE H-1
F.A.I. PROJ. NO. I-HI-1(22):5, Unit 2

Scale: As Shown Date: June, 1967

SHEET No. 9 OF 38 SHEETS

38

FED. ROAD DIST. NO.	STATE	FED. AID PROJ. NO.	FISCAL YEAR	SHEET NO.	TOTAL SHEETS
HAWAII	HAW.	I-HI-1(22)-5 Unit 2	1967	30	00

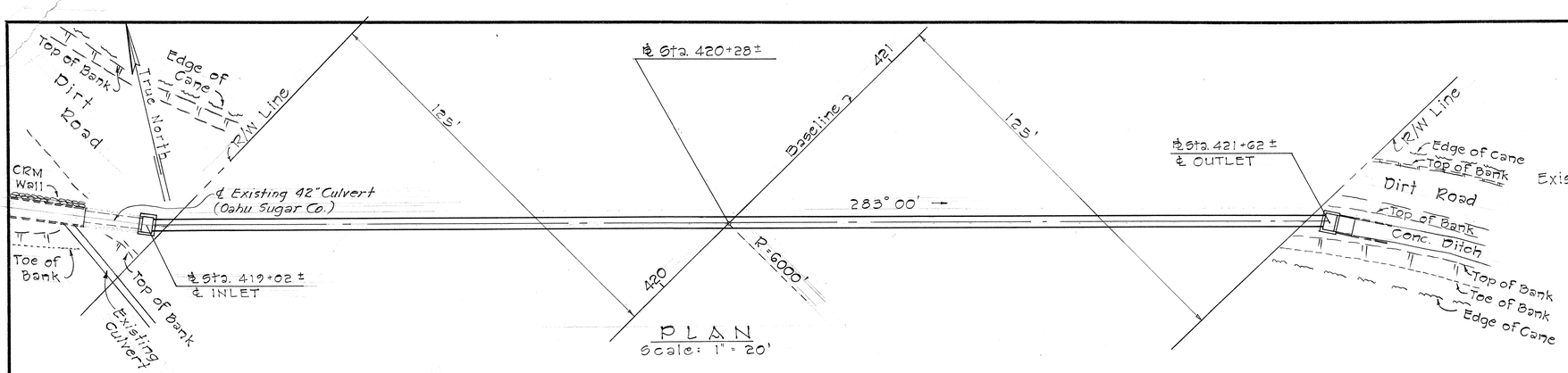

PLAN
Scale: 1" = 20'

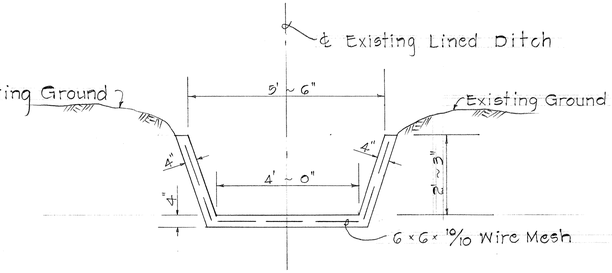

SECTION "A-A"
Scale: 1/2" = 1'-0"

Note: Location of manhole rungs shall be determined by the Engineer in the Field.

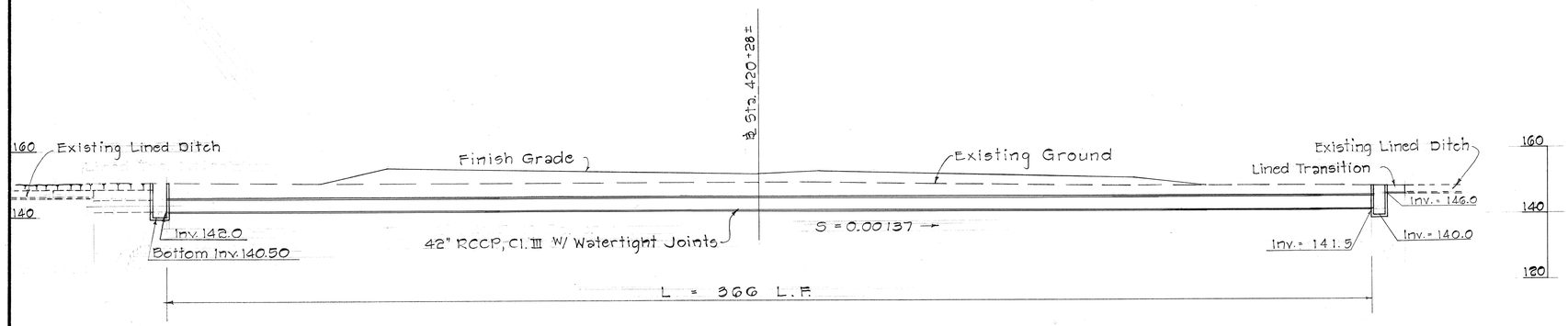

PROFILE OF 42" SIPHON
AT ℄ STA. 420+28 ±
Scale: 1" = 20'

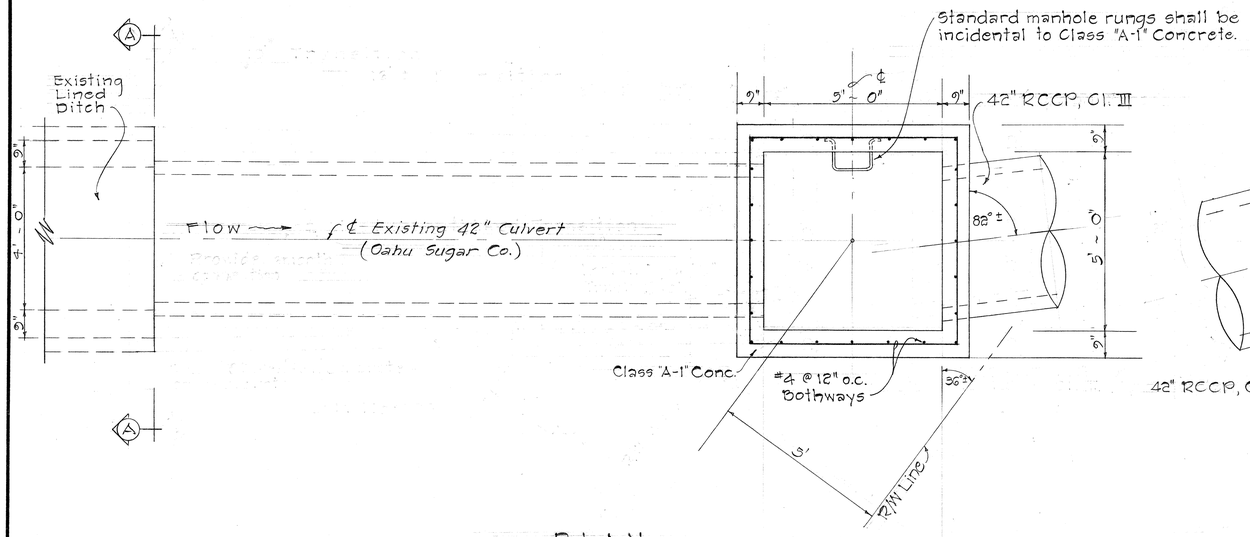

PLAN
Scale: 1/2" = 1'-0"

SIPHON INLET AT STA. 419+02 ±

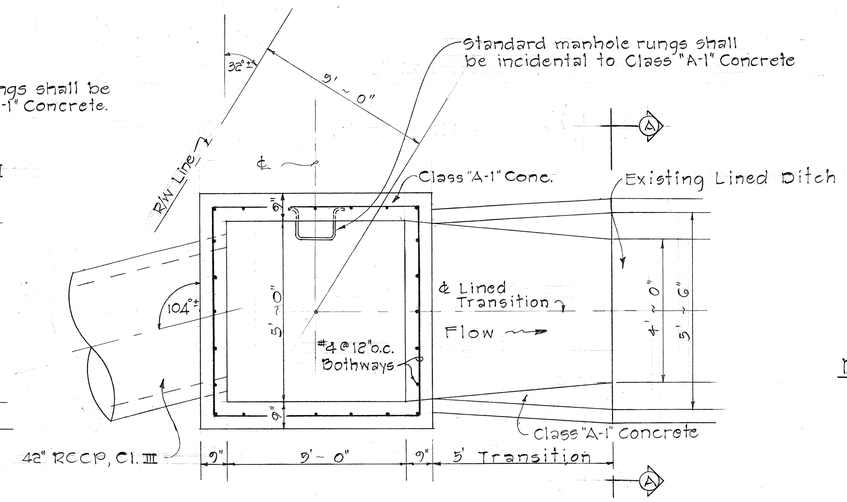

PLAN
Scale: 1/2" = 1'-0"

SIPHON OUTLET AT STA. 421+62 ±

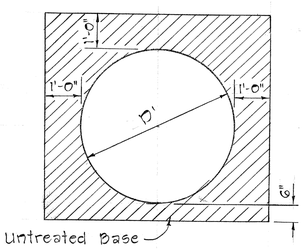

DETAIL OF UNTREATED BASE FOR PIPE FOUNDATION
Not to Scale

ORIGINAL PLAN	SURVEY PLOTTED BY	DATE
	TRACED BY	
	DESIGNED BY	
NOTE BOOK	QUANTITIES BY	
No.	CHECKED BY	

STATE OF HAWAII
DEPARTMENT OF TRANSPORTATION
HIGHWAYS DIVISION

IRRIGATION DETAILS
42" IRRIGATION SIPHON
℄ STA. 420+28 ±

INTERSTATE ROUTE H-1
F.A.I. PROJ. NO. I-H1-1(22):5 Unit 2

Scale: As Shown — Date: June, 1967

SHEET No. 10 OF 28 SHEETS

PRINTED ON NO. 1000H CLEARPRINT

FED. ROAD DIST. NO.	STATE	FED. AID PROJ. NO.	FISCAL YEAR	SHEET NO.	TOTAL SHEETS
HAWAII	HAW.	I-H1-1(22)5 Unit 2	1967	40	99

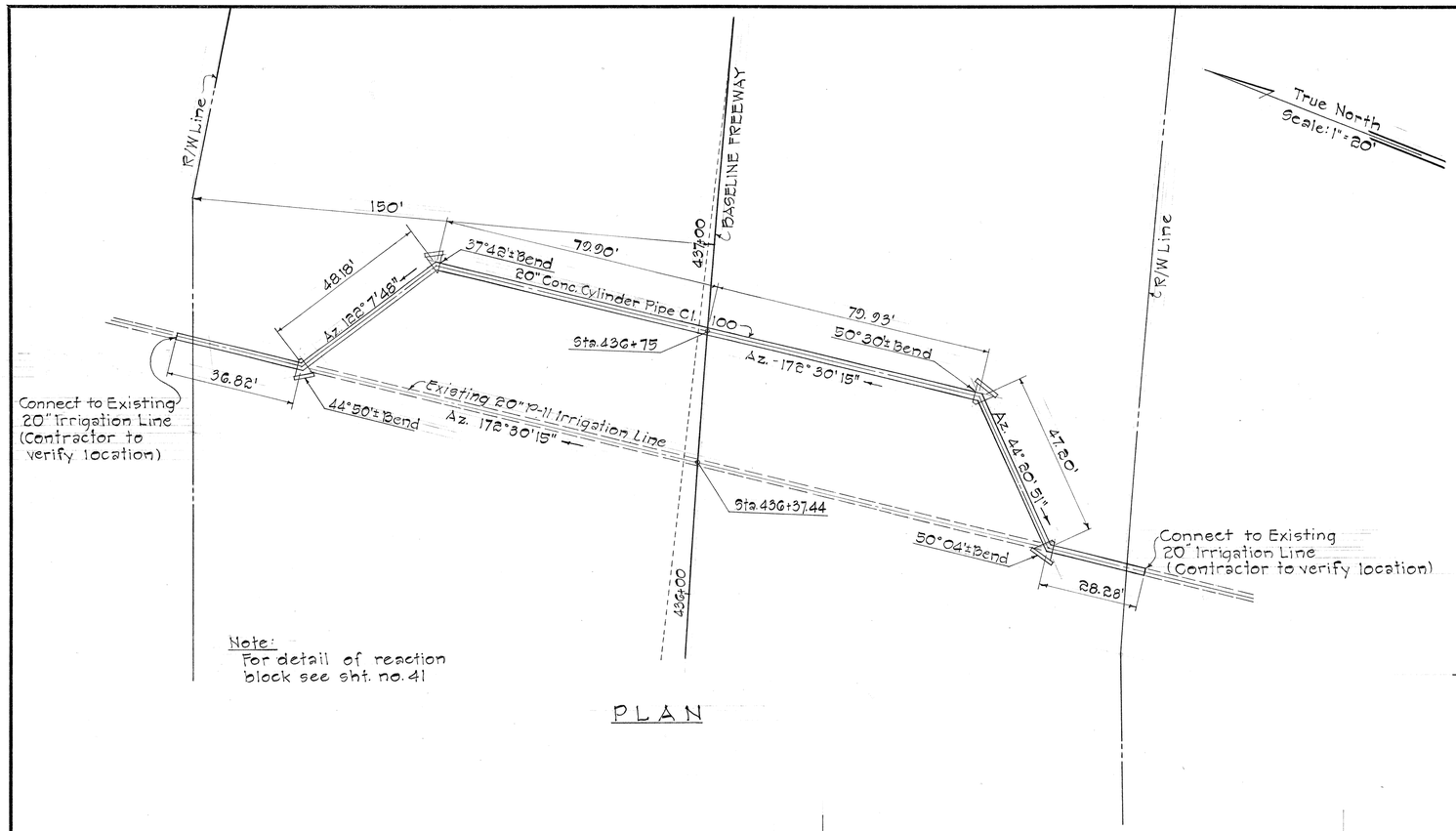

Note:
For detail of reaction block see sht. no. 41

PLAN

ESTIMATED QUANTITIES

Structure Exc.	= ~~265~~ C.Y. 205	
Class "B-1" Concrete	= ~~61~~ C.Y. 18.2	
Reinforcing Steel	= ~~398~~ Lbs. 225	
20" Conc. Cylinder Pipe, Cl. 100 (No Option)	= ~~300~~ L.F 323	
Untreated Base for Pipe Foundation	= ~~113~~ C.Y. 124	
~~GRP~~	= ~~33~~ C.Y.	

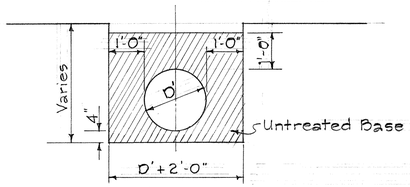

DETAIL OF UNTREATED BASE FOR PIPE FOUNDATION

Scale: 1/2" = 1'-0"

NOTE:
Pipe tested at a hydrostatic pressure of 100 p.s.i.

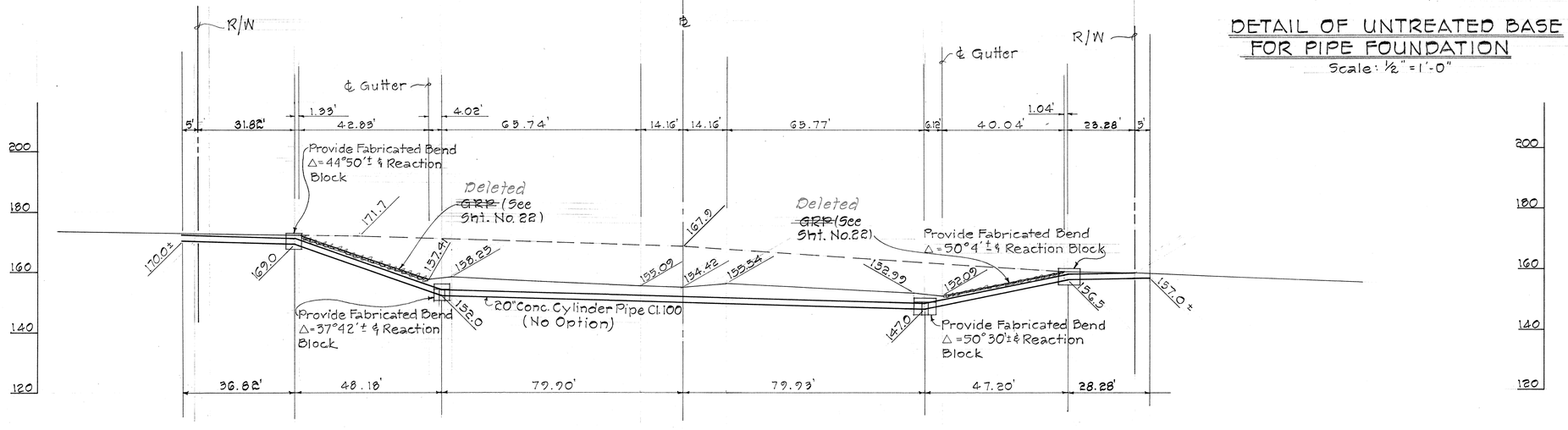

PROFILE OF 20 in. IRRIGATION PIPE LINE - P 11 ℄ STA. 436+75

Scale: 1" = 20'

ORIGINAL PLAN		DATE
	SURVEY PLOTTED BY	
	DRAWN BY	
	TRACED BY	
NOTE BOOK	DESIGNED BY	
	QUANTITIES BY	
No.	CHECKED BY	

STATE OF HAWAII
DEPARTMENT OF TRANSPORTATION
HIGHWAYS DIVISION

IRRIGATION DETAILS

RELOCATION OF P-11 20" IRRIGATION PIPE AT STA. 436+75

INTERSTATE ROUTE H-1
F.A.I. PROJ. NO. I-H1-1(22):5, Unit 2

Scale: As Shown Date: June, 1967

SHEET No. 11 OF 28 SHEETS

41

FED. ROAD DIST. NO.	STATE	FED. AID PROJ. NO.	FISCAL YEAR	SHEET NO.	TOTAL SHEETS
HAWAII	HAW.	I-H1-1(22)-5 Unit 2	1967	41	00

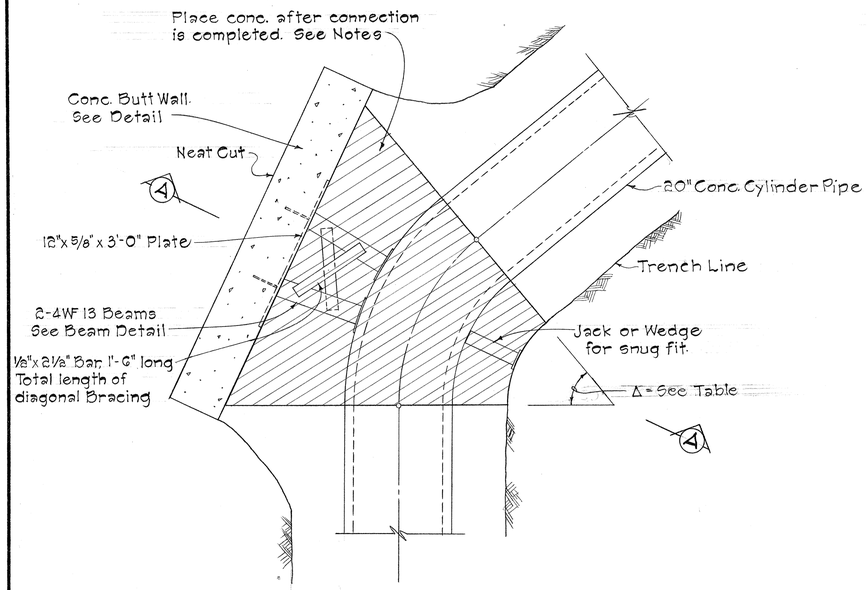

TYPICAL PLAN
Scale: 3/4" = 1'-0"

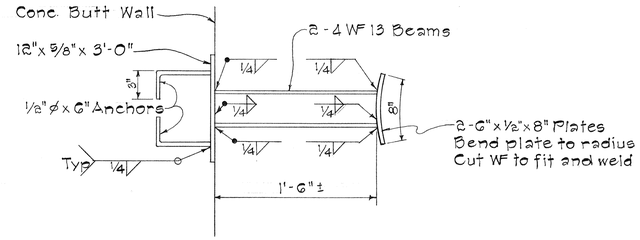

BEAM DETAIL
Scale: 1 1/2" = 1'-0"

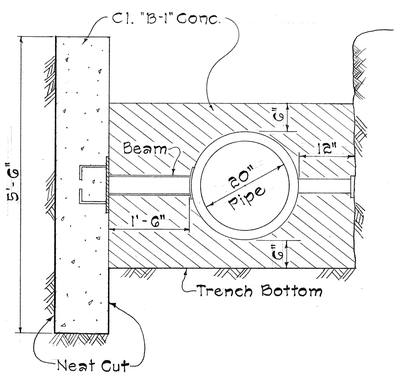

SECTION "A-A"
Scale: 3/4" = 1'-0"

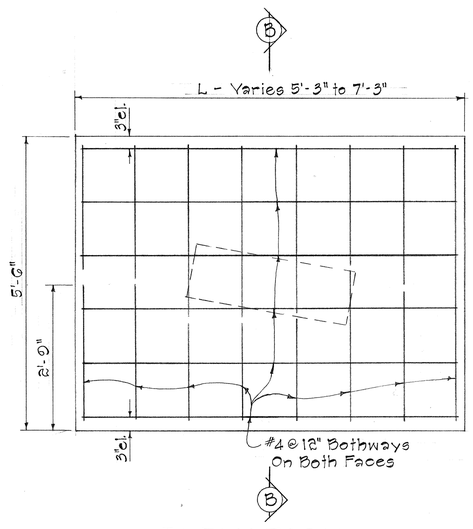

ELEVATION

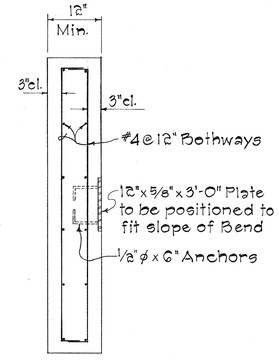

SECTION "B-B"

BEND, Δ	L
37° - 42' ±	5'-3"
44° - 50' ±	5'-6"
50° - 04' ±	6'-9"
50° - 30' ±	7'-3"

CONCRETE BUTT WALL DETAIL
Scale: 3/4" = 1'-0"

NOTES:

1. Minimum cover over reinf. shall be 3"
2. Concrete shall be Class "B-1".
3. Hatched area to be filled with concrete after connection is completed.
4. Payment for structural steel, jack or wedge shall be incidental to Class "B-1" Concrete.

DETAIL OF CONCRETE REACTION BLOCK FOR 20" PIPELINE @ ℄ STA. 436 + 75

ORIGINAL PLAN	SURVEY PLOTTED BY	DATE
	DRAWN BY	
	TRACED BY	
NOTE BOOK	DESIGNED BY	
	QUANTITIES BY	
No.	CHECKED BY	

STATE OF HAWAII
DEPARTMENT OF TRANSPORTATION
HIGHWAYS DIVISION

IRRIGATION DETAILS

RELOCATION OF P-11 20" IRRIGATION PIPE AT ℄ STA. 436+75

INTERSTATE ROUTE H-1
F. A. I. Proj. No. I-H1-1(22):5 Unit 2

Scale: As Shown Date: June, 1967

SHEET No. 12 OF 28 SHEETS

41

PRINTED ON NO. 1000H CLEARPRINT

FED. ROAD DIST. NO.	STATE	FED. AID PROJ. NO.	FISCAL YEAR	SHEET NO.	TOTAL SHEETS
HAWAII	HAW.	I-H1-1(32)5 Unit 3 I-H1-1(22)5 Unit 2	1967	C.O. 42	99

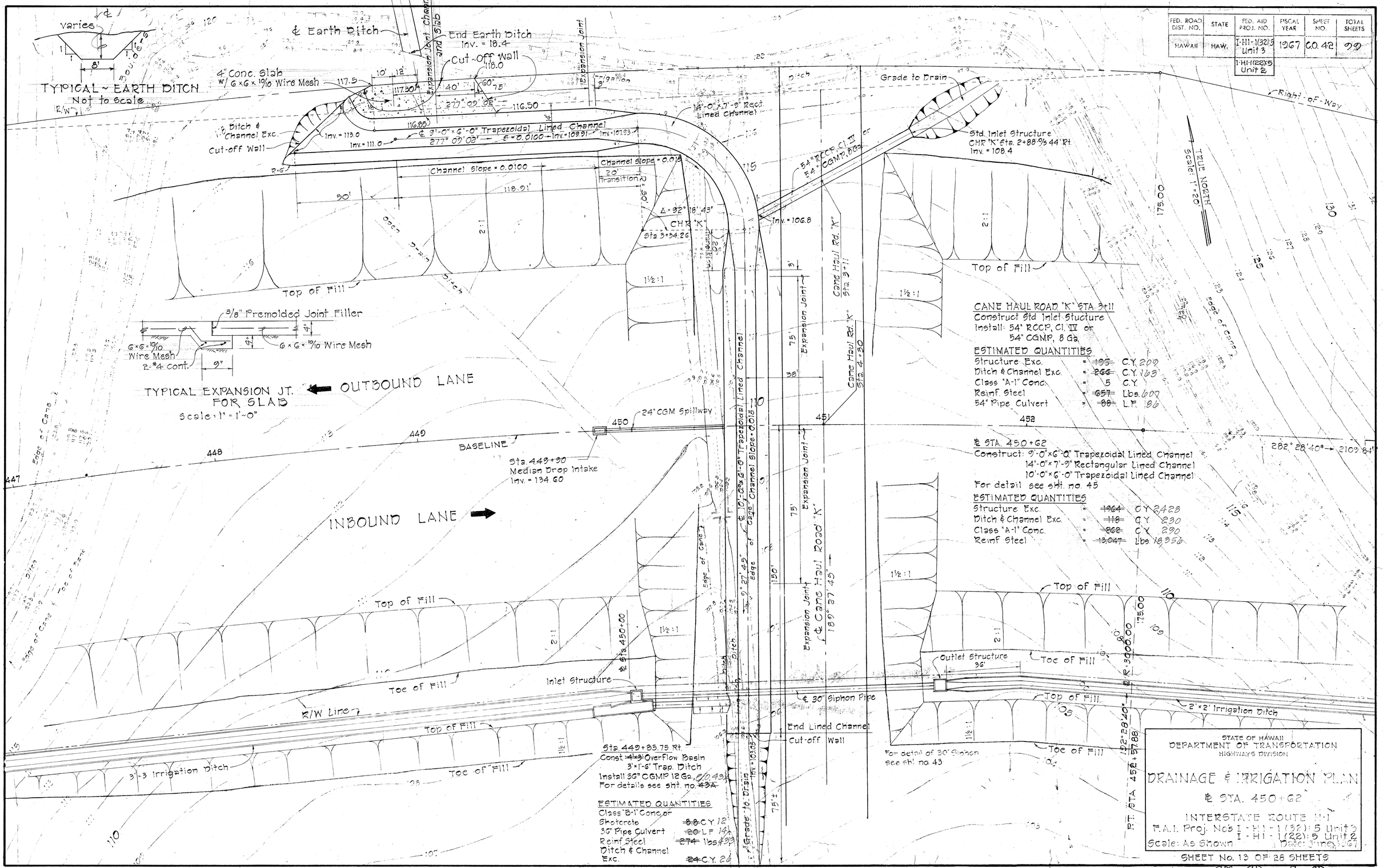

February 5, 1968

C.O. 42

FED. ROAD DIST. NO.	STATE	FED. AID PROJ. NO.	FISCAL YEAR	SHEET NO.	TOTAL SHEETS
HAWAII	HAW.	I-H1-1(22)5 Unit 2	1967	C.0.43	99

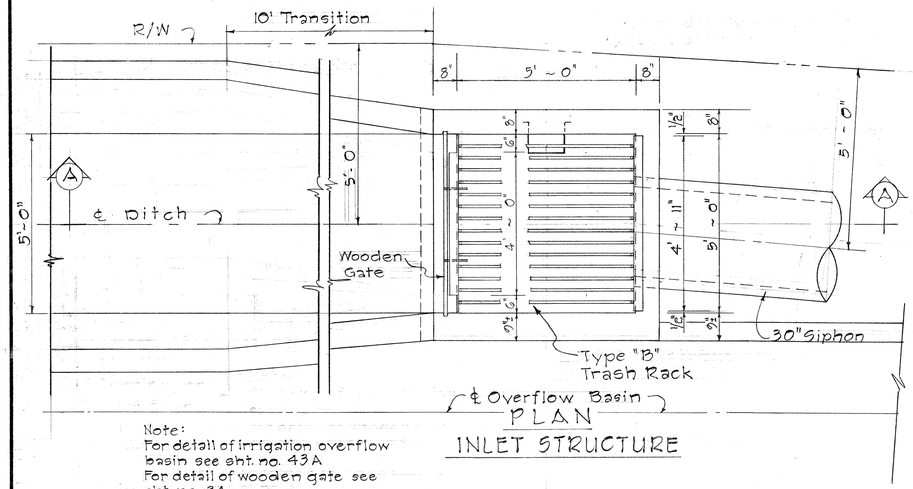

Note:
For detail of irrigation overflow basin see sht. no. 43A
For detail of wooden gate see sht. no. 34

PLAN
INLET STRUCTURE

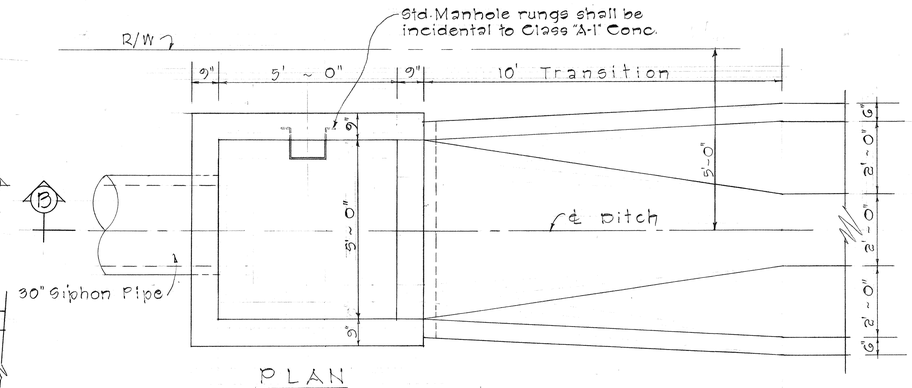

PLAN
OUTLET STRUCTURE

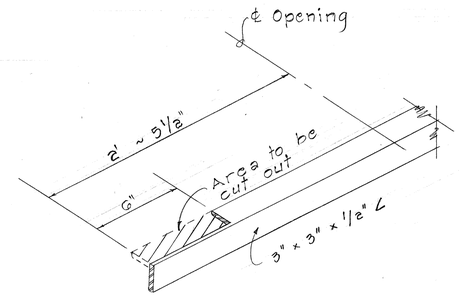

CUT OUT DETAIL
Not to scale

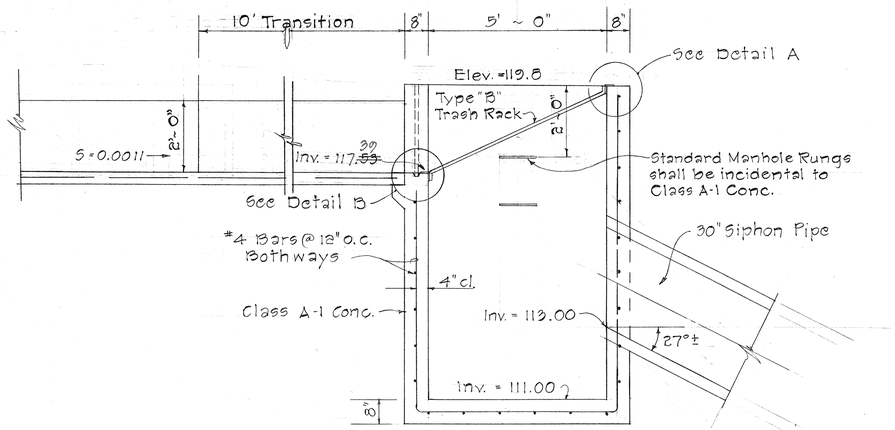

SECTION "A-A"

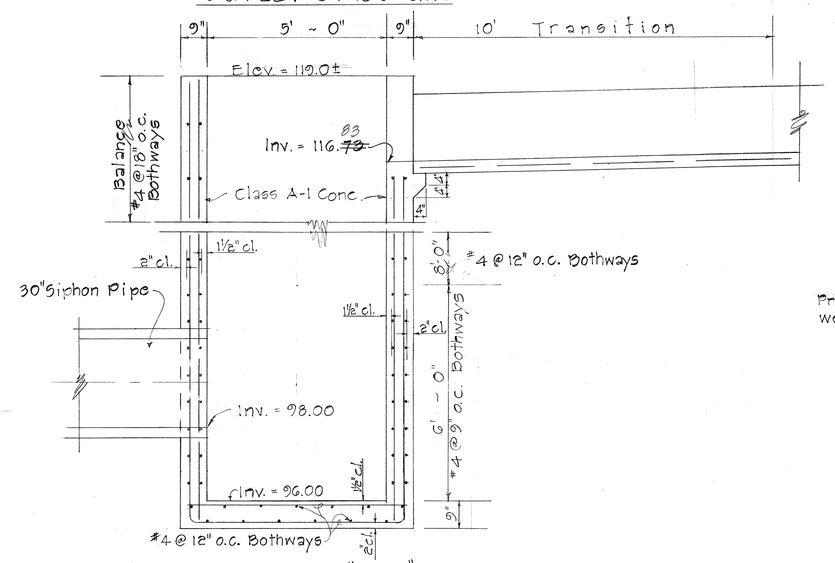

SECTION "B-B"

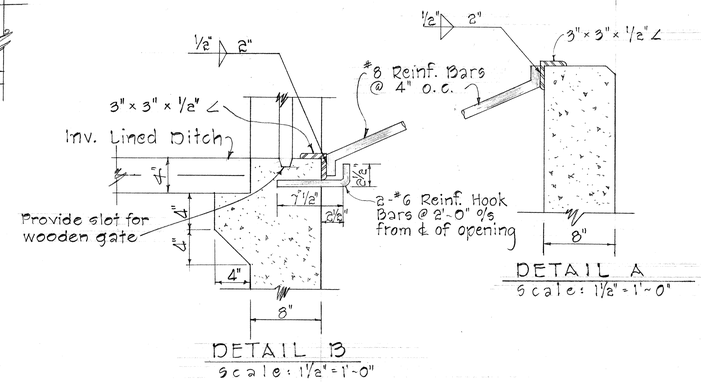

DETAILS OF TYPE "B" TRASH RACK

ESTIMATED QUANTITIES

Structure Exc.	=	~~193~~	C.Y. 217
Class "A-1" Concrete	=	21.2	C.Y.
Reinf. Steel	=	~~1824~~	Lbs. 1,866
~~GRP~~	=	~~3.8~~	~~C.Y.~~
30" Siphon Pipe	=	~~150~~	L.F. 147
Trash Rack	=	1	Ea.

Note: Location of manhole rungs shall be determined by the engineer in the field.

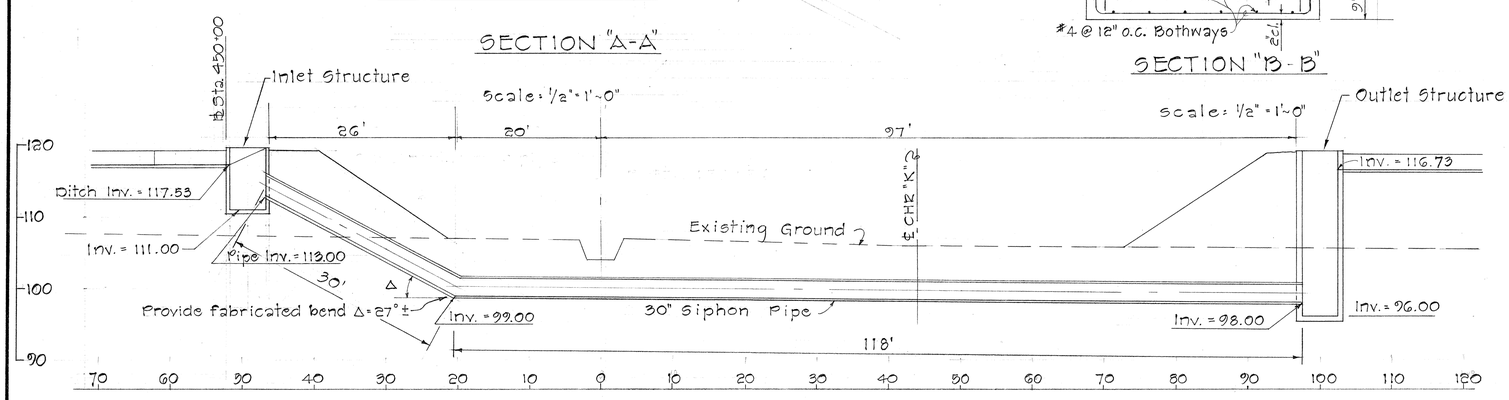

PROFILE OF 30" SIPHON @ STRUCTURE #451
Scale: 1" = 10'

STATE OF HAWAII
DEPARTMENT OF TRANSPORTATION
HIGHWAYS DIVISION

IRRIGATION DETAILS
30" SIPHON AT STRUCTURE #451

INTERSTATE ROUTE H-1
F.A.I. Proj. No. I-H1-1(22):5 Unit 2
Scale: As Shown Date: June, 1967

SHEET No. 14 OF 28 SHEETS

April 1, 1968

ORIGINAL PLAN	SURVEY PLOTTED BY	DATE
	DRAWN BY	
	TRACED BY	
NOTE BOOK	DESIGNED BY	
	QUANTITIES BY	
No.	CHECKED BY	

PRINTED ON NO. 1000H CLEARPRINT

FED. ROAD DIST. NO.	STATE	FED. AID PROJ. NO.	FISCAL YEAR	SHEET NO.	TOTAL SHEETS
HAWAII	HAW.	I-H1-1(32)5 Unit 3 I-H1-1(22)5 Unit 2	1967	C043A	99

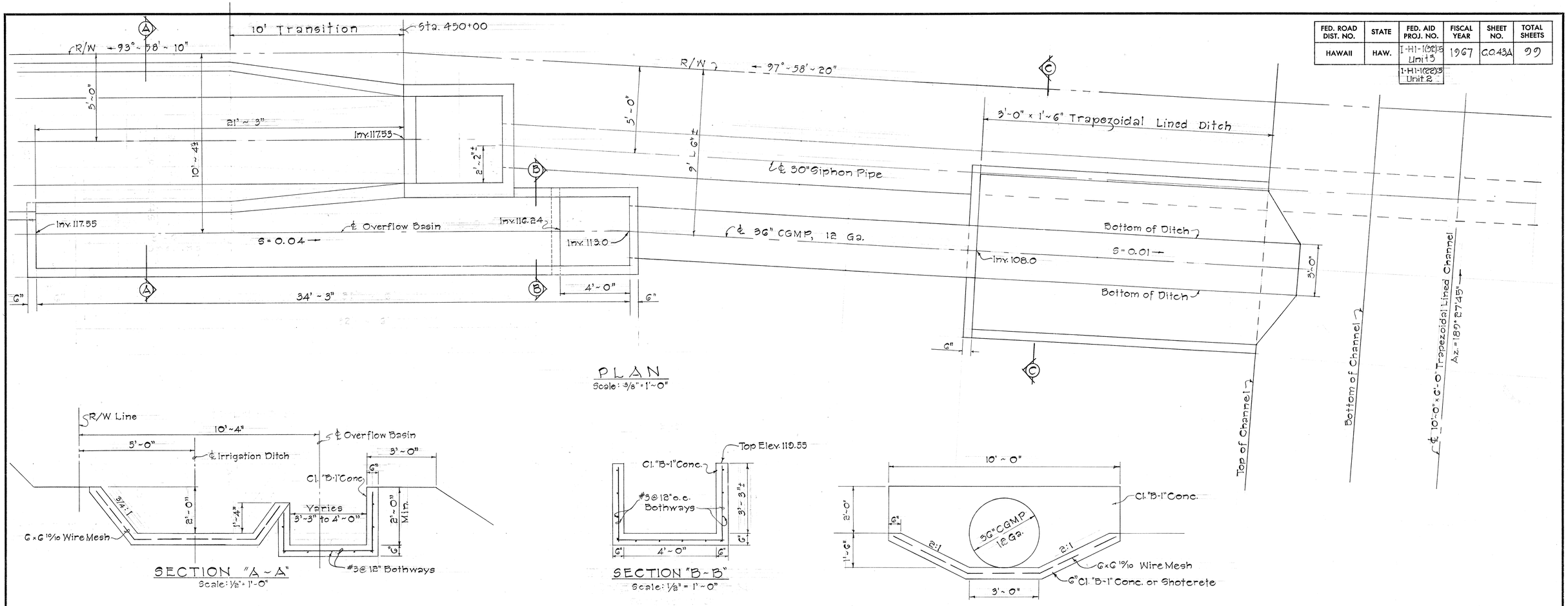

PLAN
Scale: 3/8" = 1'~0"

SECTION "A ~ A"
Scale: 1/2" = 1'~0"

SECTION "B ~ B"
Scale: 1/2" = 1'~0"

SECTION "C ~ C"
Scale: 1/2" = 1'~0"

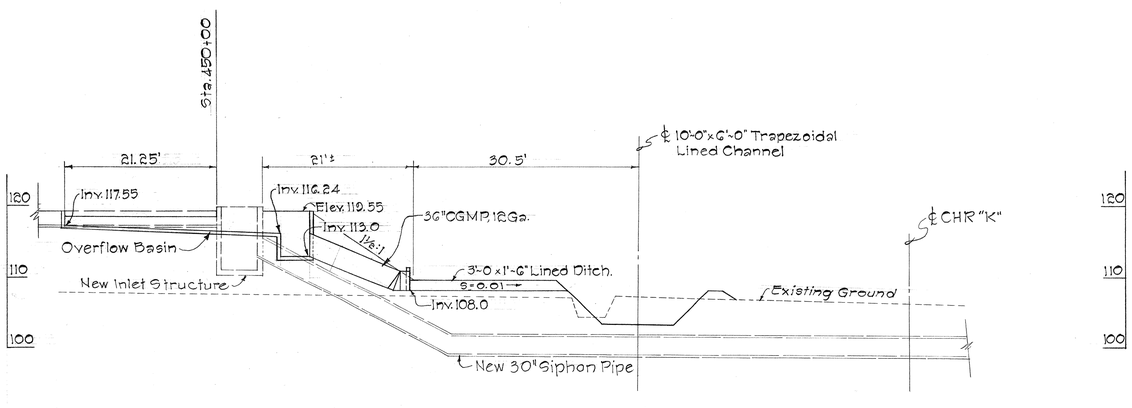

PROFILE OF OVERFLOW BASIN & CONNECTION TO LINED CHANNEL
Scale: 1" = 10'

ORIGINAL PLAN	SURVEY PLOTTED BY	DATE
	TRAVERSE BY	"
	TRACED BY	"
NOTE BOOK	DESIGNED BY	"
	CHECKED BY	"
No.	DIRECTED BY	"

STATE OF HAWAII
DEPARTMENT OF TRANSPORTATION
HIGHWAYS DIVISION

IRRIGATION DETAILS
OVERFLOW BASIN AND
CONNECTION TO LINED CHANNEL
INTERSTATE ROUTE H-1
F. A. I. Proj. Nos I-H1-1(32):5 Unit 3
I-H1-1(22):5 Unit 2
Scale: As Shown Date: Sept. 1967

SHEET No. 14A OF 28 SHEETS

PRINTED ON NO. 1000H CLEARPRINT

April 1, 1968

C043A

FED. ROAD DIST. NO.	STATE	FED. AID PROJ. NO.	FISCAL YEAR	SHEET NO.	TOTAL SHEETS
HAWAII	HAW.	I-HI-1(22):5 Unit 2	1967	C.O. 44	99

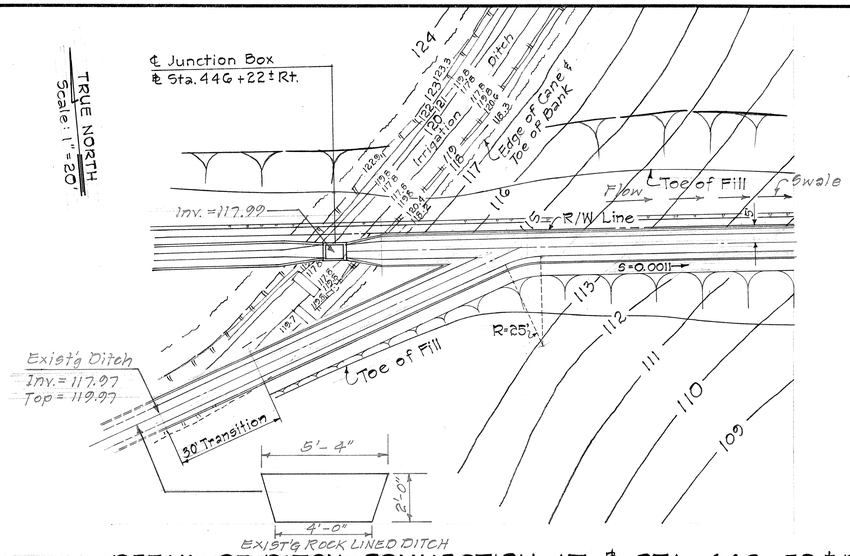

DETAIL OF DITCH CONNECTION AT ℄ STA. 446 + 70 ± RT.

Scale: 1" = 20'

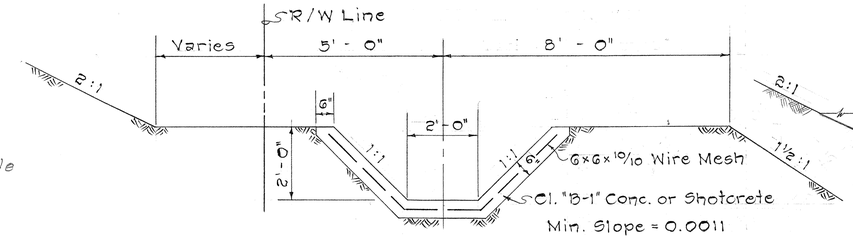

TYPICAL SECTION OF

2' × 2' TRAPEZOIDAL IRRIGATION DITCH

Scale: ½" = 1'-0"

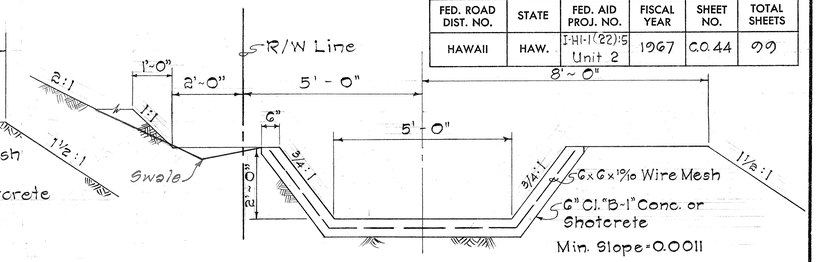

TYPICAL SECTION OF

5' × 2' TRAPEZOIDAL IRRIGATION DITCH

BETWEEN ℄ STA. 446 + 23 AND STA. 450 + 00

Scale: ½" = 1'-0"

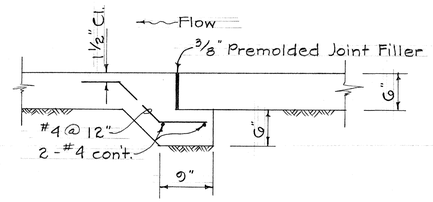

TYPICAL EXPANSION JOINT @ 90' o.c.

FOR TRAPEZOIDAL LINED DITCH

Scale: 1" = 1'-0"

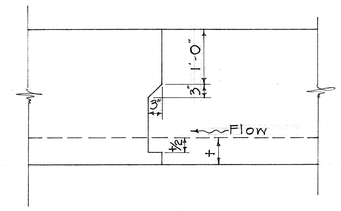

ELEVATION VIEW

TYPICAL CONSTRUCTION JOINT @ 30' o.c.

FOR TRAPEZOIDAL LINED DITCH

Scale: 3/4" = 1'-0"

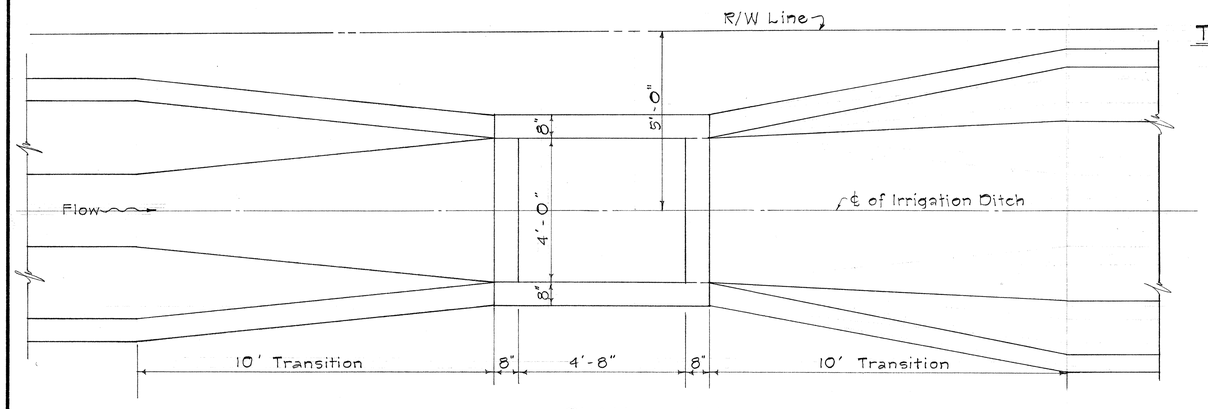

PLAN

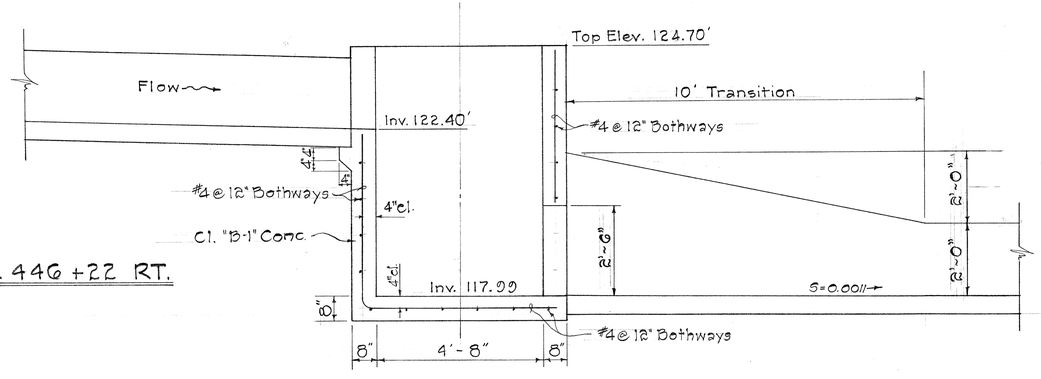

ELEVATION

IRRIGATION JUNCTION BOX @ ℄ STA. 446 + 22 RT.

Scale: ½" = 1'-0"

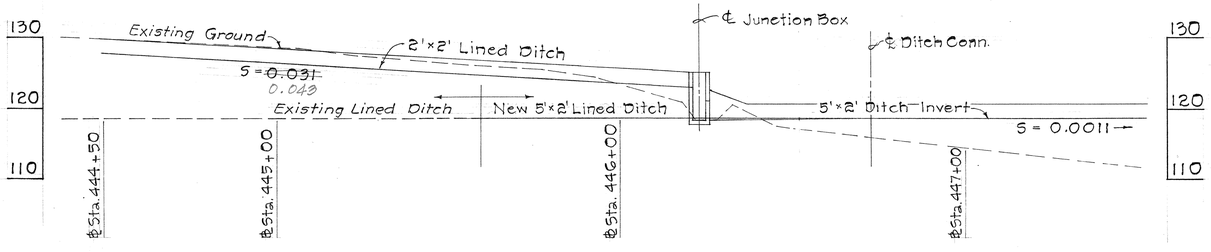

PROFILE OF IRRIGATION DITCH ALONG INBOUND LANE R/W

Scale: Horiz. 1" = 20'
Vert. 1" = 10'

ORIGINAL PLAN		
	SURVEY PLOTTED BY	DATE
	DRAWN BY	"
	TRACED BY	"
NOTE BOOK	DESIGNED BY	"
	QUANTITIES BY	"
No.	CHECKED BY	"

STATE OF HAWAII
DEPARTMENT OF TRANSPORTATION
HIGHWAYS DIVISION

IRRIGATION DETAILS

DITCH CONNECTIONS AND IRRIGATION JUCTION BOX AT STA. 446 + 22 ± RT.
TYPICAL SECTION OF 2 x 2 DITCH

INTERSTATE ROUTE H-1
F.A.I. PROJ. NO. I-HI-1(22):5, Unit 2

Scale: As Shown Date: June, 1967

SHEET No. 15 OF 38 SHEETS

PRINTED ON NO. 1000H CLEARPRINT

April 1, 1968

C.O. 44

FED. ROAD DIST. NO.	STATE	FED. AID PROJ. NO.	FISCAL YEAR	SHEET NO.	TOTAL SHEETS
HAWAII	HAW.	I-H1-1(32):5 Unit 3	1967	45	99

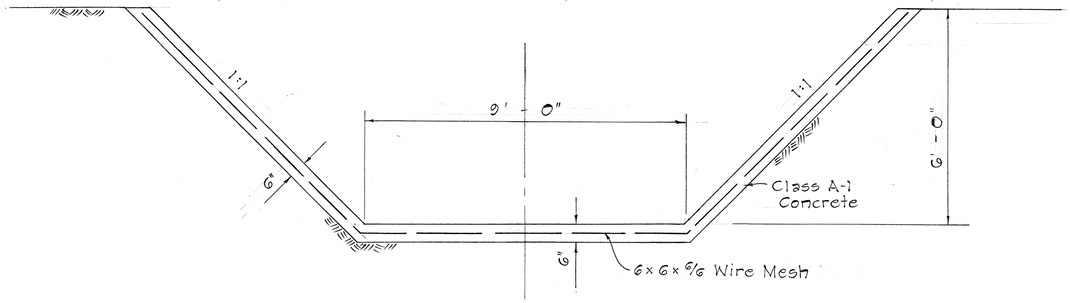

TYPICAL SECTION
9'-0" x 6'-0" TRAPEZOIDAL LINED CHANNEL
Scale: 1/2" = 1'-0"

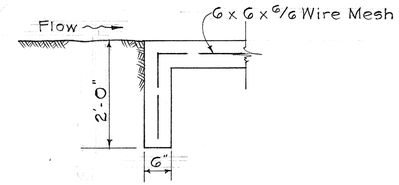

TYPICAL SECTION
CUT-OFF WALL FOR
TRAPEZOIDAL CHANNEL
Scale: 3/4" = 1'-0"

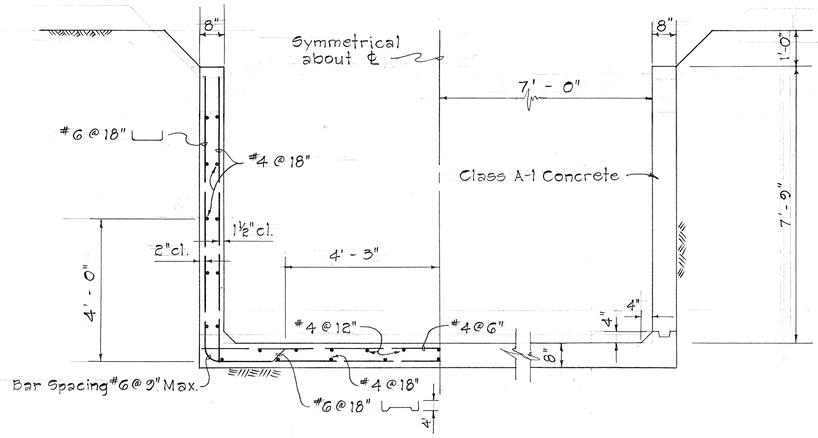

TYPICAL SECTION
14'-0" x 7'-9" RECTANGULAR LINED CHANNEL
Scale: 1/2" = 1'-0"

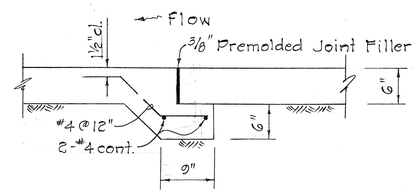

TYPICAL EXPANSION JOINT
FOR TRAPEZOIDAL LINED CHANNELS
(See Plan For Location)
Scale: 1" = 1'-0"

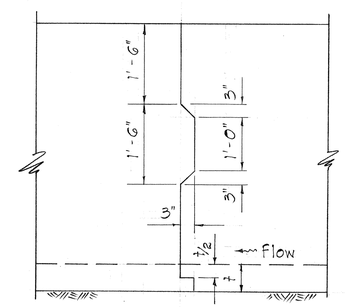

ELEVATION VIEW
TYPICAL CONSTRUCTION JOINT @ 30' o.c.
FOR TRAPEZOIDAL LINED CHANNELS
Scale: 3/4" = 1'-0"

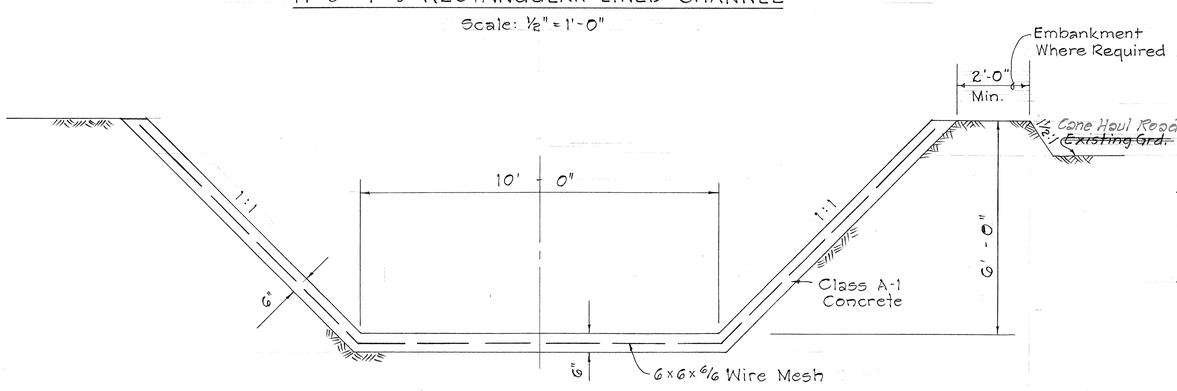

TYPICAL SECTION
10'-0" x 6'-0" TRAPEZOIDAL LINED CHANNEL
Scale: 1/2" = 1'-0"

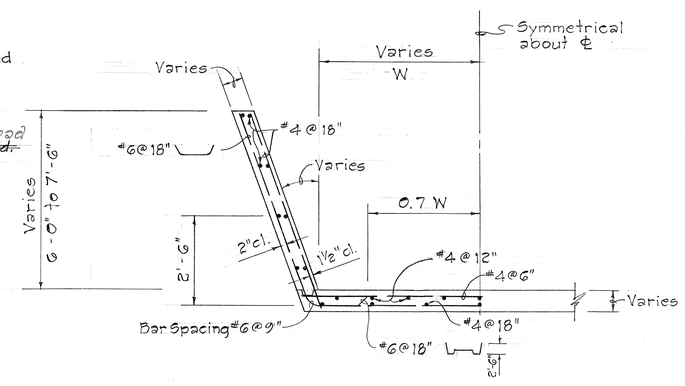

TYPICAL SECTION
TRANSITION BETWEEN TRAPEZOIDAL
AND RECTANGULAR LINED CHANNELS
Scale: 1/2" = 1'-0"

STATE OF HAWAII
DEPARTMENT OF TRANSPORTATION
HIGHWAYS DIVISION

DRAINAGE DETAILS
CONCRETE LINED CHANNEL
AT ℄ STA. 450+68

INTERSTATE ROUTE H-1
F.A.I. PROJ. NO. I-H1-1(32):5, Unit 3

Scale: As Shown Date: June, 1967

SHEET No. 16 OF 28 SHEETS

ORIGINAL PLAN
NOTE BOOK No.
SURVEY PLOTTED BY
TRACED BY
DESIGNED BY
QUANTITIES BY
CHECKED BY
DATE

PRINTED ON NO. 1000H CLEARPRINT

FED. ROAD DIST. NO.	STATE	FED. AID PROJ. NO.	FISCAL YEAR	SHEET NO.	TOTAL SHEETS
HAWAII	HAW.	I-H1-1(22):5 Unit 2	1967	46	99

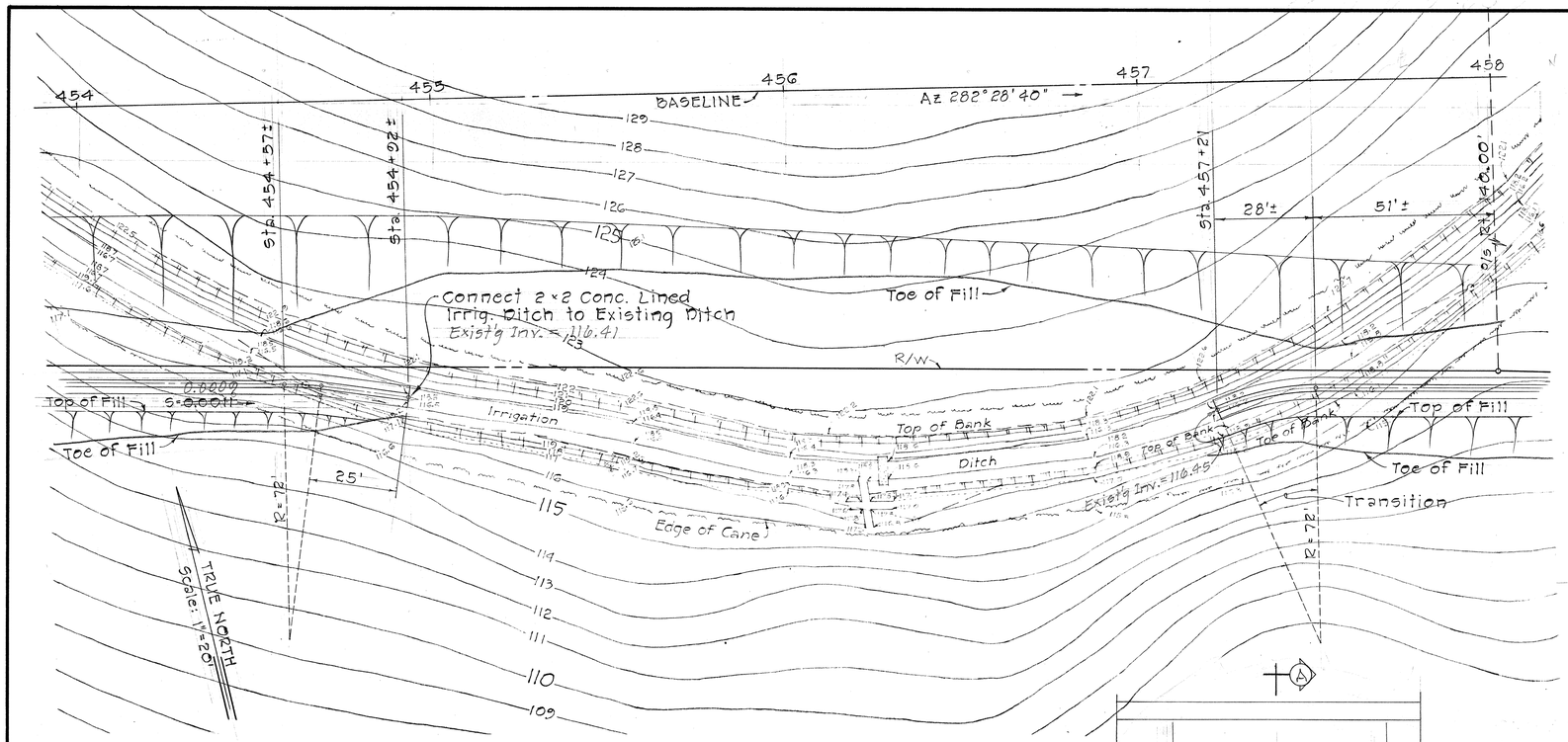

DETAIL OF DITCH CONNECTION
AT ℄ STA. 454+92± AND
AT ℄ STA. 457+21

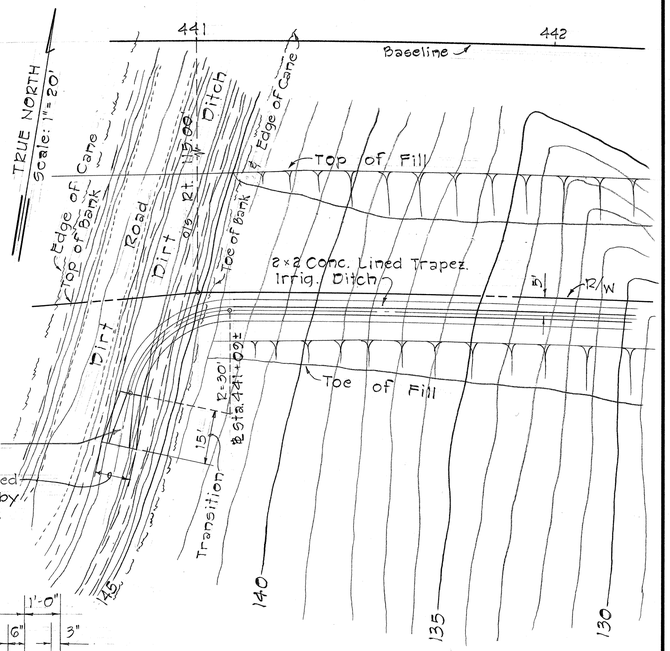

DETAIL OF DITCH CONNECTION
AT ℄ STA. 441+00

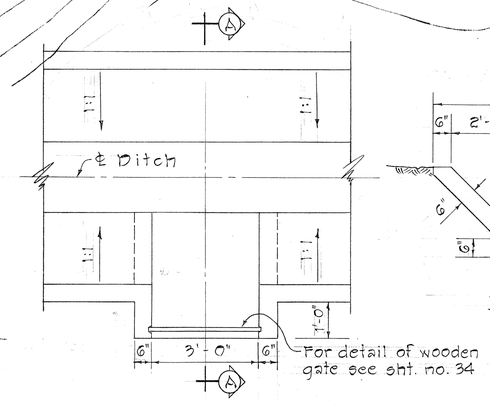

PLAN

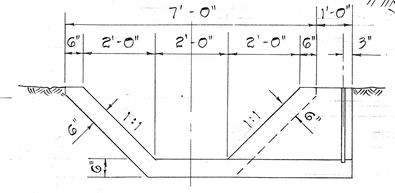

SECTION "A-A"

TYPICAL DETAIL OF SIDE OPENING
FOR 2'×2' IRRIGATION DITCH
Scale: 1/2" = 1'-0"

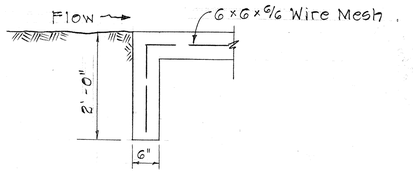

TYPICAL SECTION
CUT-OFF WALL FOR
TRAPEZOIDAL IRRIGATION DITCH
Scale: 3/4" = 1'-0"

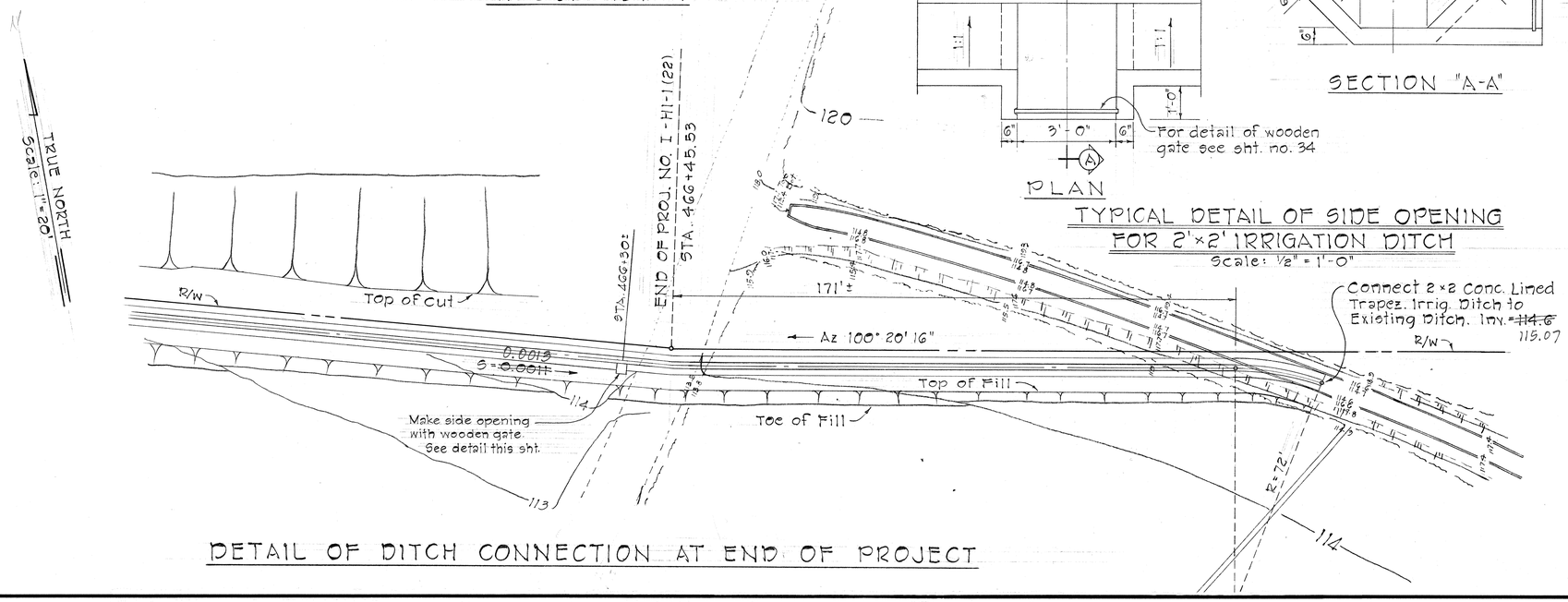

DETAIL OF DITCH CONNECTION AT END OF PROJECT

STATE OF HAWAII
DEPARTMENT OF TRANSPORTATION
HIGHWAYS DIVISION

IRRIGATION DETAILS
DETAILS OF DITCH CONNECTIONS
AT ℄ Sta. 441+00; ℄ Sta. 454+92± &
℄ Sta. 457+21; & END OF PROJECT

INTERSTATE ROUTE H-1
F.A.I. Proj. No. I-H1-1(22):5, Unit 2
Scale: As Shown Date: June, 1967

SHEET No. 17 OF 28 SHEETS

46

FED. ROAD DIST. NO.	STATE	FED. AID PROJ. NO.	FISCAL YEAR	SHEET NO.	TOTAL SHEETS
HAWAII	HAW.	I-H1-1(32)5 Unit 3	1967	47	99

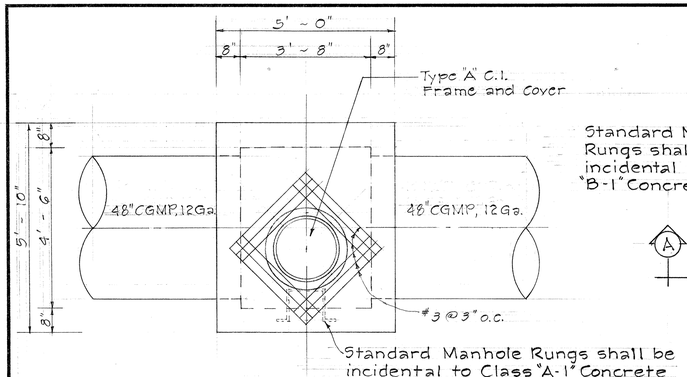

PLAN
Scale: 1/2" = 1'-0"

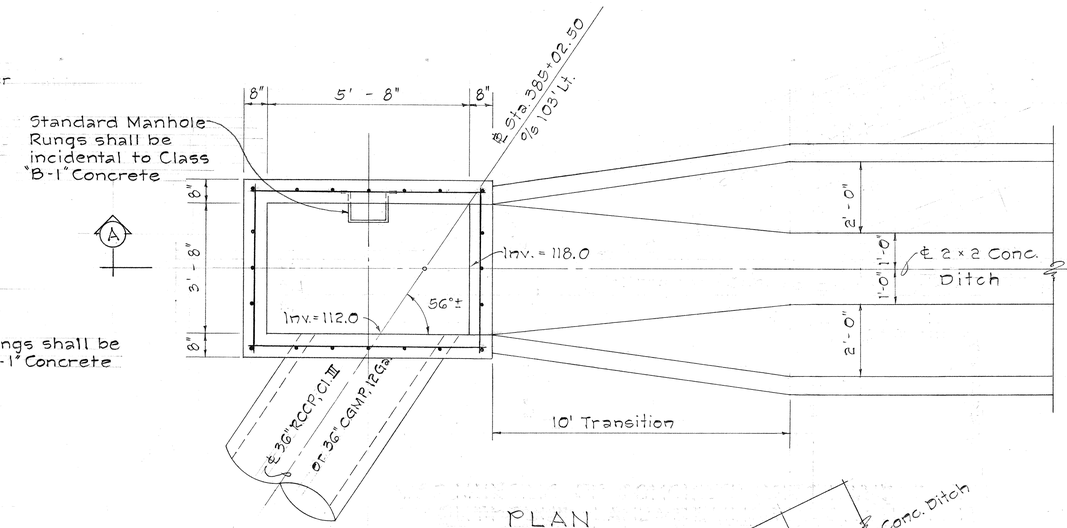

PLAN
Scale: 1/2" = 1'-0"

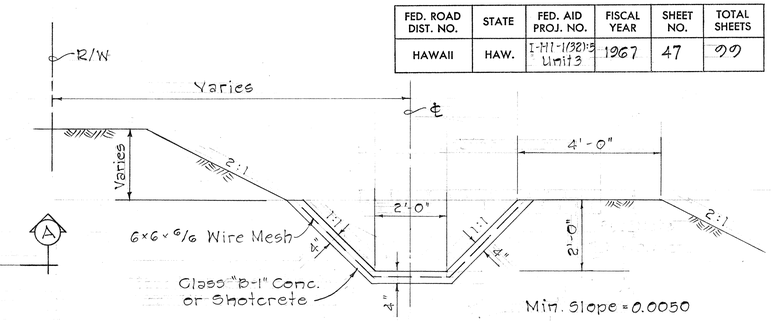

℄ Sta. 385+00± to 398+00±
(See Cross-Sections)

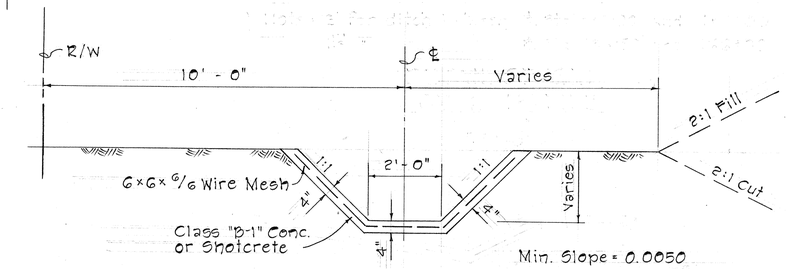

2' for ditch between ℄ Sta. 398+00 to 436+00
1½' for ditch between ℄ Sta. 436+50 to 466+00

CONCRETE CUT-OFF DITCH
Scale: 1/2" = 1'-0"

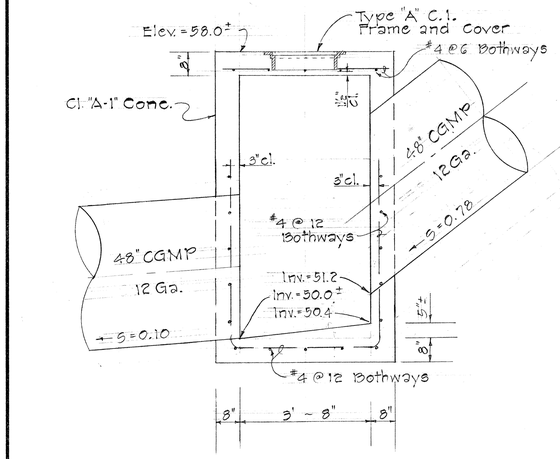

SECTION
Scale: 1/2" = 1'-0"

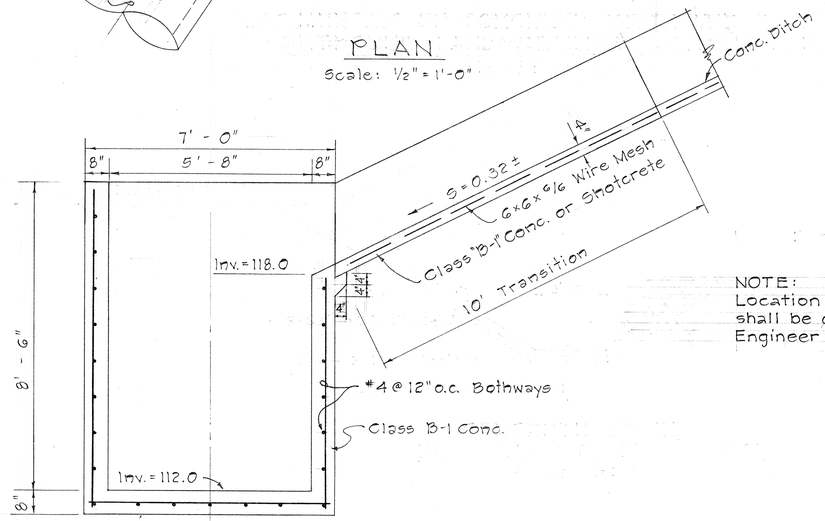

SECTION "A-A"
Scale: 1/2" = 1'-0"

CDI AT ℄ STA. 385+02.50 Lt.

NOTE:
Location of manhole rungs shall be determined by the Engineer in the field.

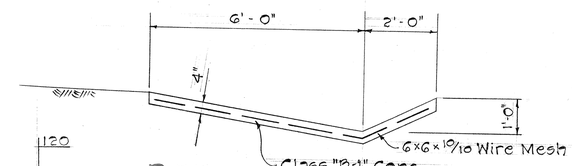

DELETE
~~TYPICAL SECTION OF CONCRETE LINED GUTTER ℄ STA 393+00 - STA. 399+00~~
Scale: 1/2" = 1'-0"

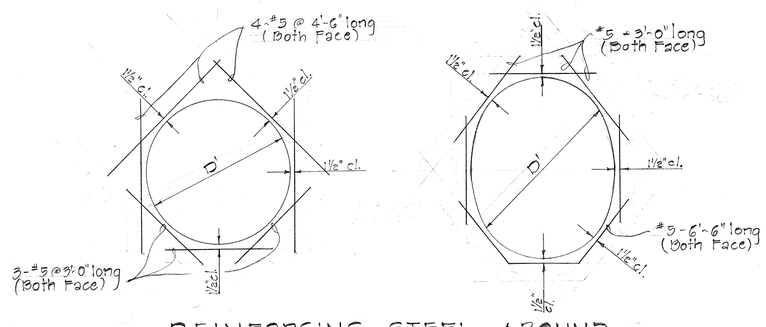

REINFORCING STEEL AROUND 48" PIPE CULVERTS ~ OPENING
Scale: 1/2" = 1'-0"

DETAILS OF TYPE "M-A" S.D.M.H. AT ℄ STA. 384+14

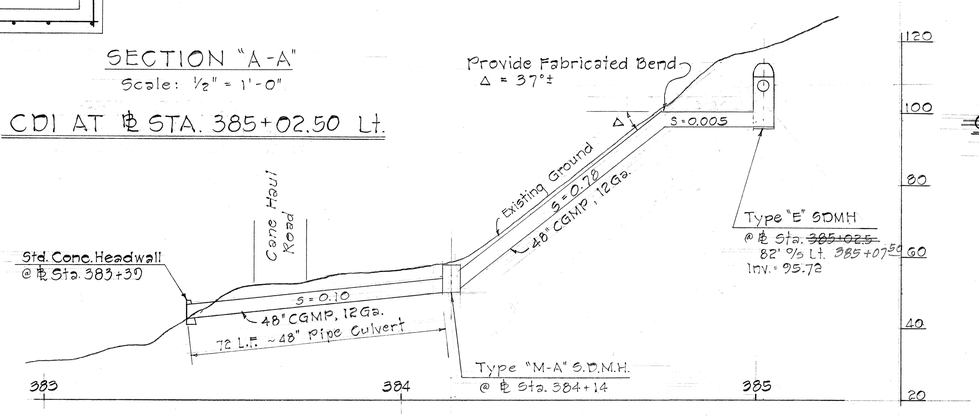

PROFILE OF 48" PIPE CULVERTS AT WAIKELE BRIDGE
Scale: 1" = 20'

STATE OF HAWAII
DEPARTMENT OF TRANSPORTATION
HIGHWAYS DIVISION

DRAINAGE DETAILS
TYPE "M-A" SDMH AT ℄ STA. 384+14
CDI AT ℄ STA. 385+02.50 Lt.
TYPICAL SECTION OF CONC. LINED GUTTER
CONCRETE CUT-OFF DITCH
INTERSTATE ROUTE H-1
F.A.I. PROJ. NO. I-H1-1(32):5 Unit 3

Scale: As Shown Date: June, 1967

SHEET No. 18 OF 28 SHEETS

ORIGINAL PLAN		DATE
	SURVEY PLOTTED BY	7/23/65
	TRACING BY	
	NOTE BOOK	DESIGNED BY	7/27/67
		QUANTITIES BY	
	No.	CHECKED BY	

PRINTED ON NO. 1000H CLEARPRINT

FED. ROAD DIST. NO.	STATE	FED. AID PROJ. NO.	FISCAL YEAR	SHEET NO.	TOTAL SHEETS
HAWAII	HAW.	I-H1-1(32)5 Unit 3	1967	48	99

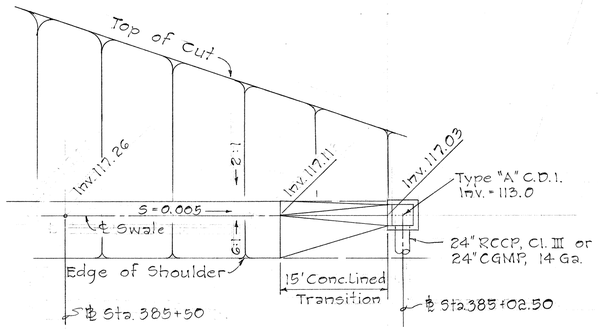

LAYOUT PLAN

Scale: 1" = 10'-0"

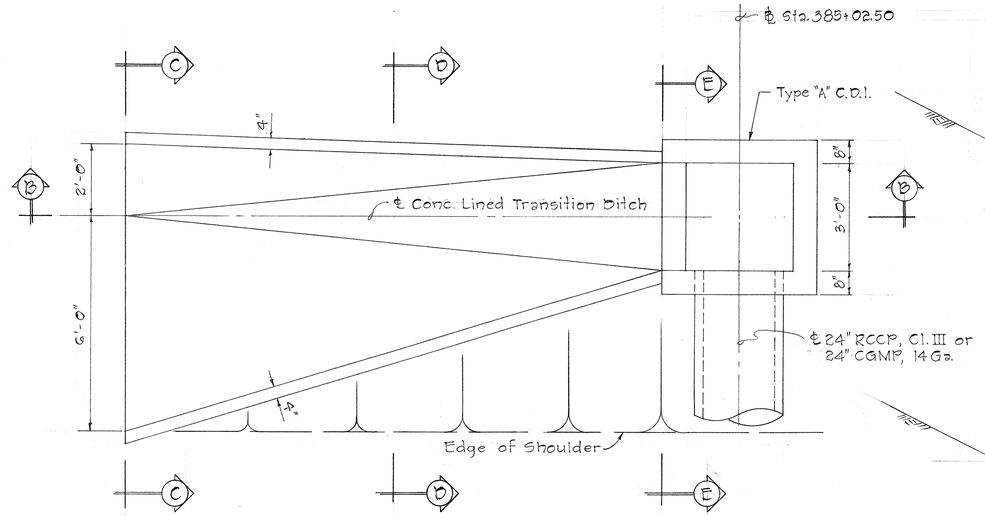

PLAN

Scale: 1/2" = 1'-0"

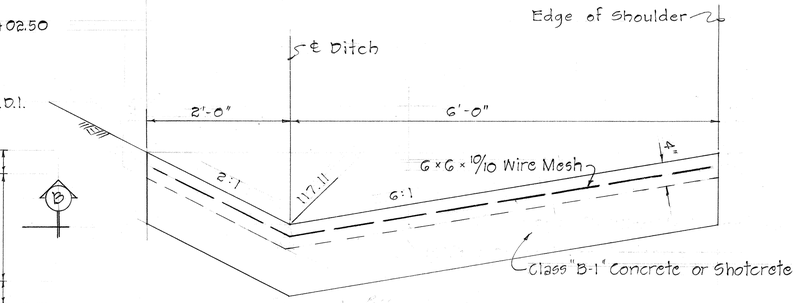

SECTION "C-C"

Scale: 1" = 1'-0"

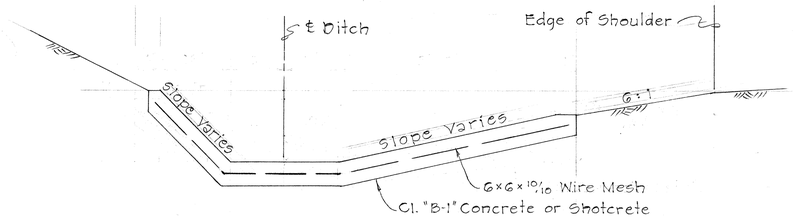

SECTION "D-D"

Scale: 1" = 1'-0"

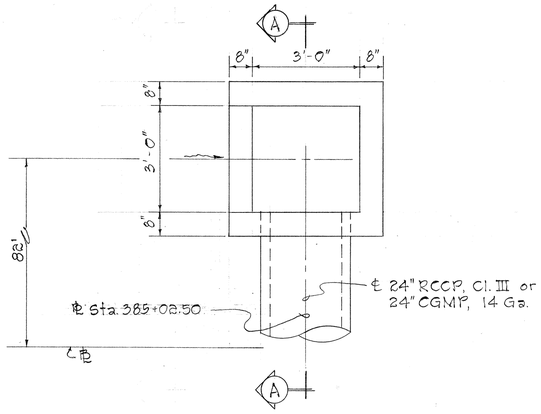

PLAN

Scale: 1/2" = 1'-0"

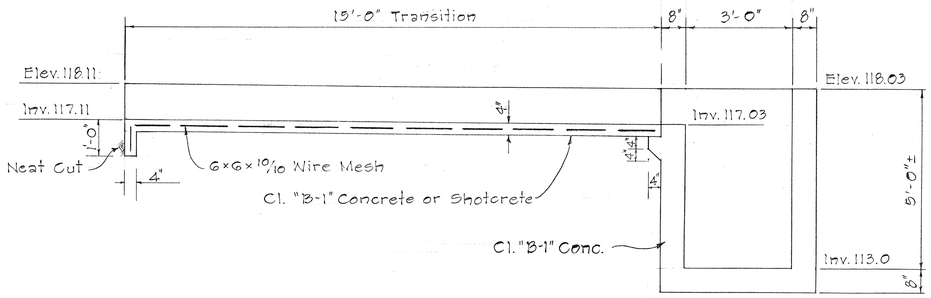

SECTION "B-B"

Scale: 1/2" = 1'-0"

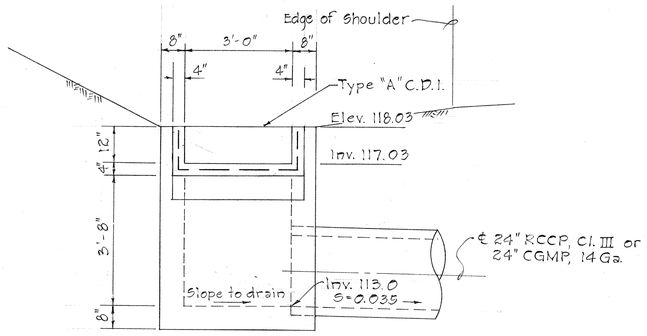

SECTION "E-E"

Scale: 1/2" = 1'-0"

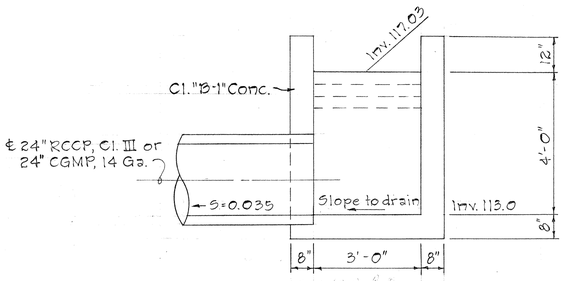

SECTION "A-A"

Scale: 1/2" = 1'-0"

ORIGINAL PLAN		
	SURVEY PLOTTED BY	DATE
	TRACED BY	" " 5/22/67
	DESIGNED BY	" " 5/22/67
NOTE BOOK	QUANTITIES BY	
No.	CHECKED BY	

DETAILS OF TYPE "A" CDI AT ℄ STA. 385+02.50 82' % RT.

STATE OF HAWAII
DEPARTMENT OF TRANSPORTATION
HIGHWAYS DIVISION

DRAINAGE DETAILS

TYPE "A" CDI AT ℄ STA. 385+02.50 82' % Rt.

INTERSTATE ROUTE H-1
F.A.I. PROJ. NO. I-H1-1(32)5 Unit 3

Scale: As Shown Date: June, 1967

SHEET No. 19 OF 28 SHEETS

PRINTED ON NO. 1000H CLEARPRINT

48

FED. ROAD DIST. NO.	STATE	FED. AID PROJ. NO.	FISCAL YEAR	SHEET NO.	TOTAL SHEETS
HAWAII	HAW.	I-H1-1(32)5 Unit 3	1967	49	99

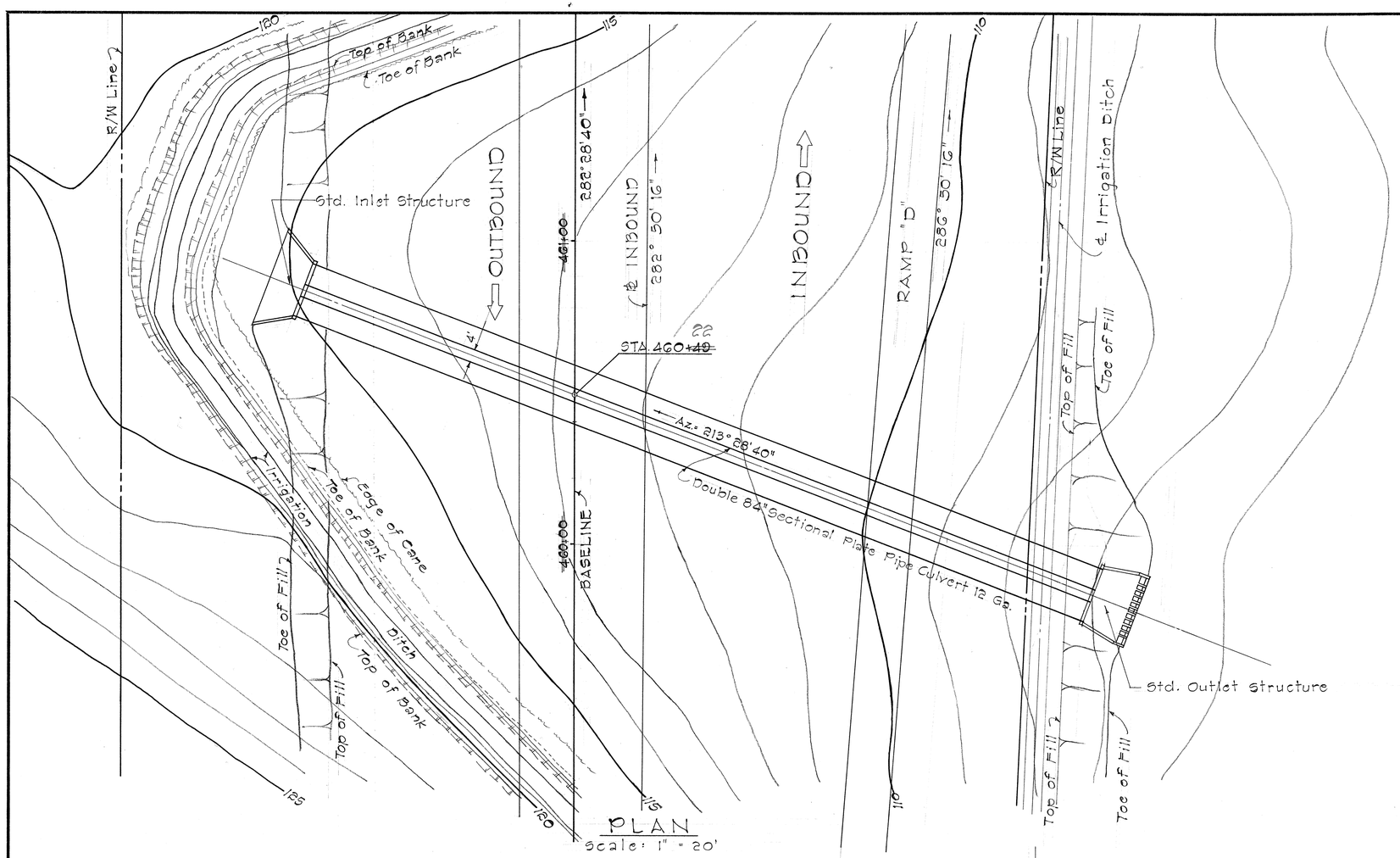

PLAN
Scale: 1" = 20'

GENERAL NOTE

The Double 84" Sectional Plate Pipe Culvert shall have its vertical diameter factory elongated 5%.

ESTIMATED QUANTITIES

Structure Exc.	338 ~~41~~	C.Y.
Ditch & Channel Exc.	11	C.Y.
Untreated Base For Pipe Foundation	1,282.5 ~~1255~~	C.Y.
Class "A-1" Concrete	32.8 ~~303~~	C.Y.
Reinforcing Steel	4,208 ~~3614~~	Lbs.
84" Sect. Plate Pipe Culvert, 12 Ga.	562 ~~560~~	L.F.

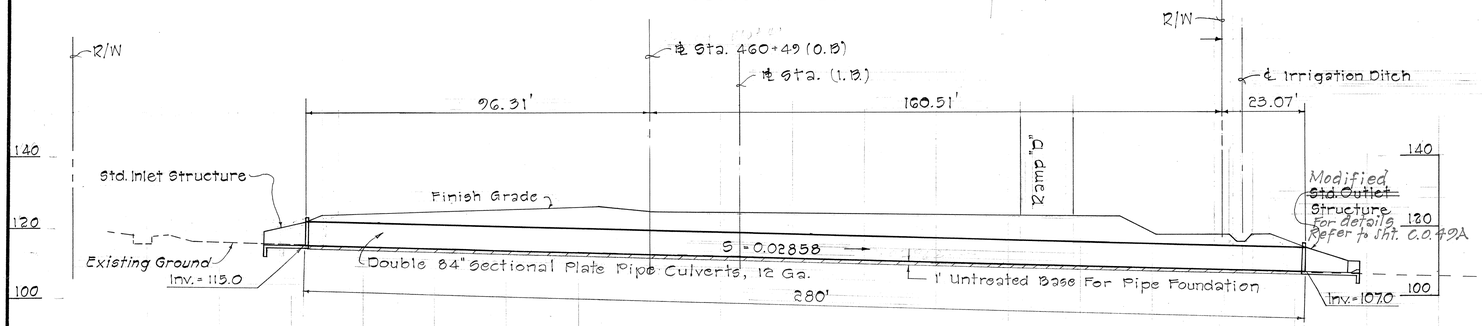

PROFILE @ ℄ OF DOUBLE 84" SECTIONAL PLATE PIPE CULVERTS, 12 Ga.
Scale: 1" = 20'

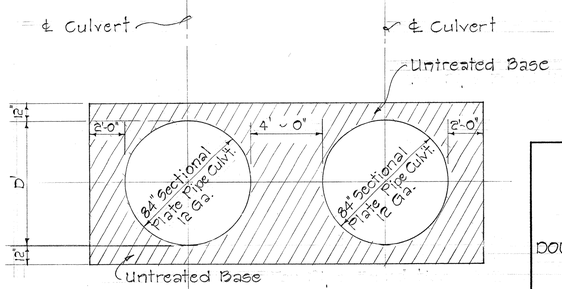

TYPICAL SECTION
CULVERT INSTALLATION SHOWING PIPE FOUNDATION AND BACKFILL
Scale: 1/4" = 1'-0"

STATE OF HAWAII
DEPARTMENT OF TRANSPORTATION
HIGHWAYS DIVISION

DRAINAGE DETAILS

DOUBLE 84" SECT. PLATE PIPE CULVERTS
℄ STA. 460 +49.0

INTERSTATE ROUTE H-1
F.A.I. PROJ. NO. I-H1-1(32):5, Unit 3

Scale: As Shown — Date: June, 1967

SHEET No. 20 OF 28 SHEETS

ORIGINAL PLAN		
	SURVEY PLOTTED BY	DATE
	DRAWN BY	
	TRACED BY	
	DESIGNED BY	
	QUANTITIES BY	
	CHECKED BY	
	NOTE BOOK	
	No.	

PRINTED ON NO. 1000H CLEARPRINT

FED. ROAD DIST. NO.	STATE	FED. AID PROJ. NO.	FISCAL YEAR	SHEET NO.	TOTAL SHEETS
HAWAII	HAW.	I-H1-1(32)-5 Unit 3 I-H1-1(22)-5 Unit 2	1967	C.O. 49 A	99

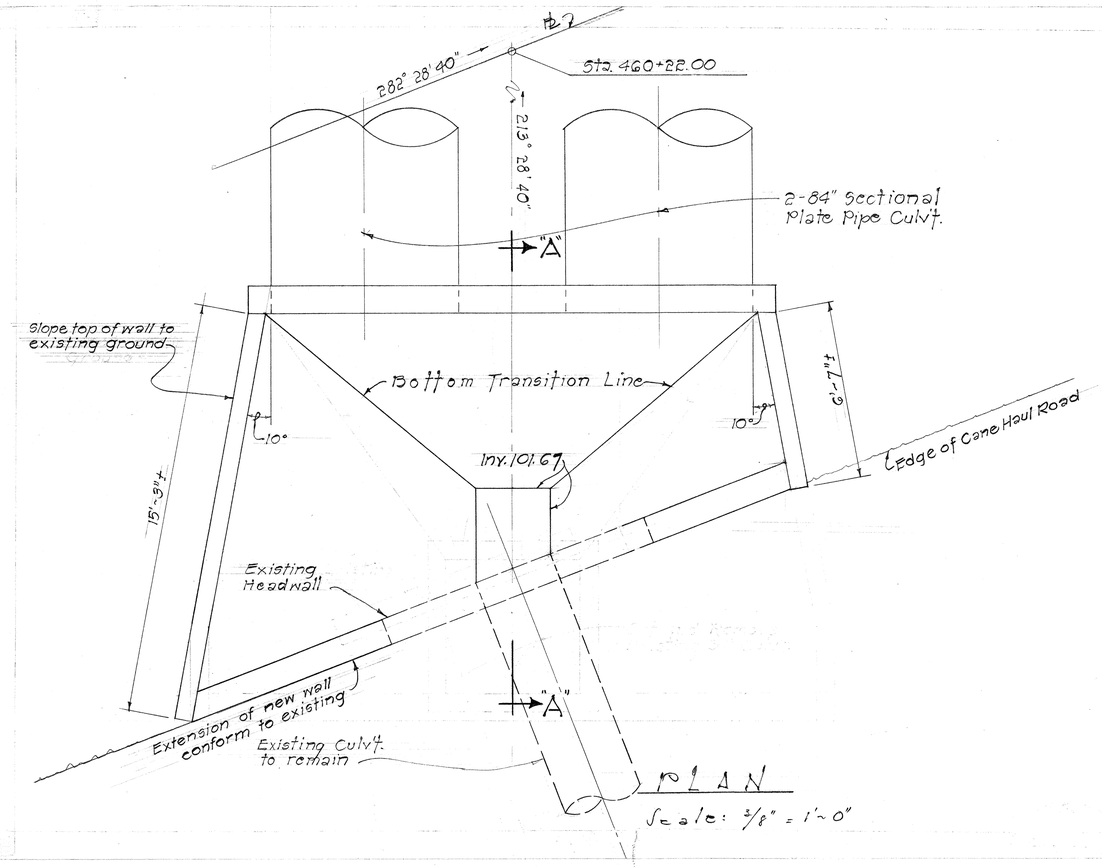

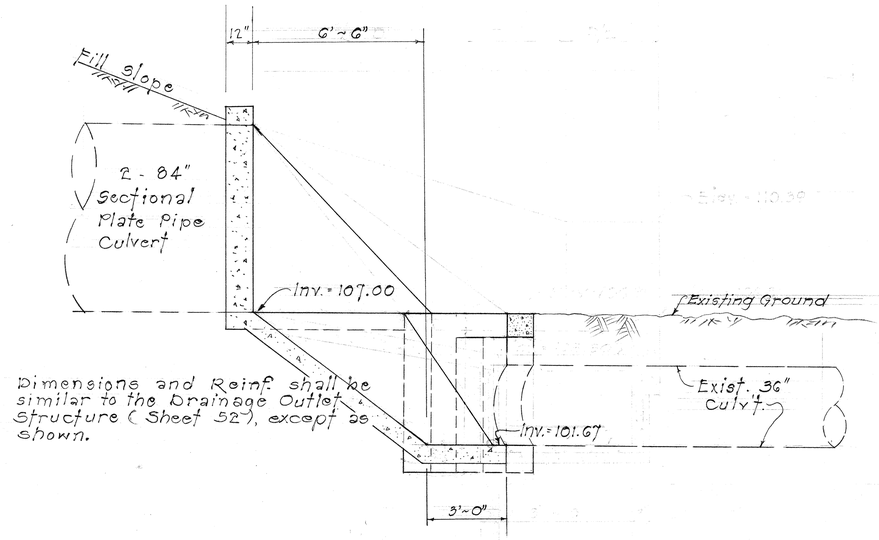

SECTION VIEW "A-A"
Scale 3/8" = 1'-0"

OUTLET STRUCTURE @ ℄ STA. 460 + 22 RT.

ORIGINAL PLAN	SURVEY PLOTTED BY	DATE
	DRAWN BY	"
	TRACED BY	"
	DESIGNED BY	"
NOTE BOOK	QUANTITIES BY	"
No.	CHECKED BY	"

STATE OF HAWAII
DEPARTMENT OF TRANSPORTATION
HIGHWAYS DIVISION

DRAINAGE DETAILS

OUTLET STRUCTURE @
℄ STA. 460 + 22 RT.

INTERSTATE ROUTE H-1
F.A.I. PROJ. NO. I-H1-1(32)-5, Unit 3

Scale: As Shown Date: June, 1967

SHEET No. OF SHEETS

February 5, 1968

C.O. 49 A

FED. ROAD DIST. NO.	STATE	FED. AID PROJ. NO.	FISCAL YEAR	SHEET NO.	TOTAL SHEETS
HAWAII	HAW.	I-H1-1(32)5 Unit 3	1967	50	99

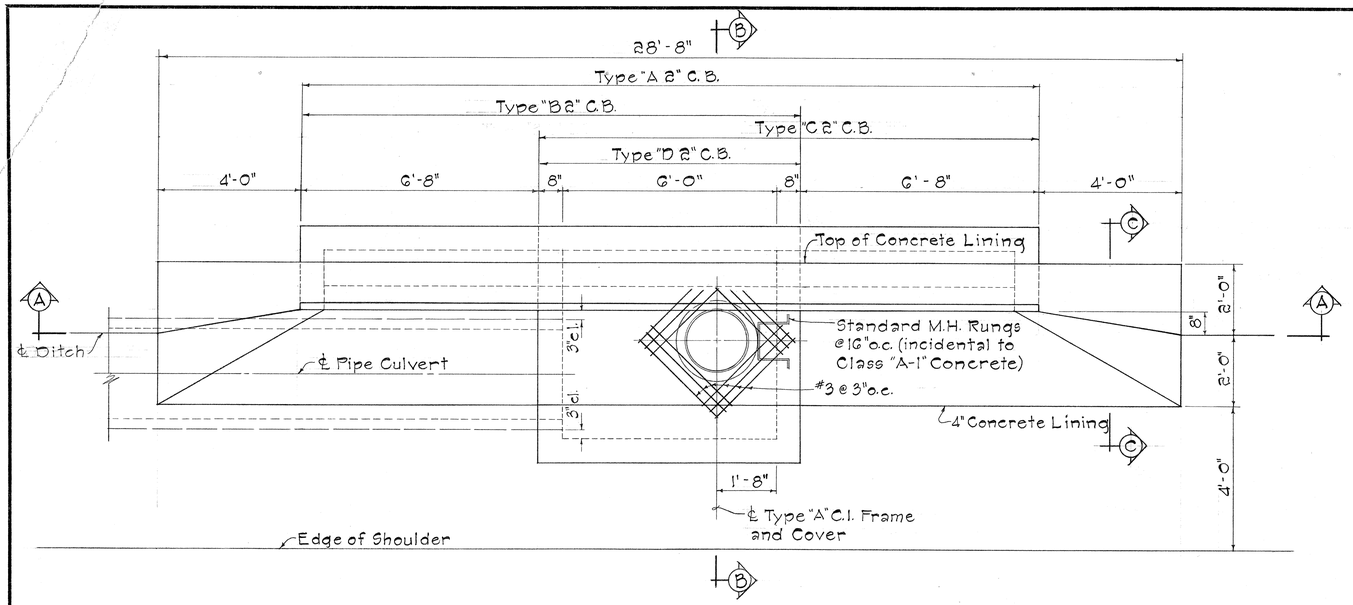

PLAN

Scale: 1/2" = 1'-0"

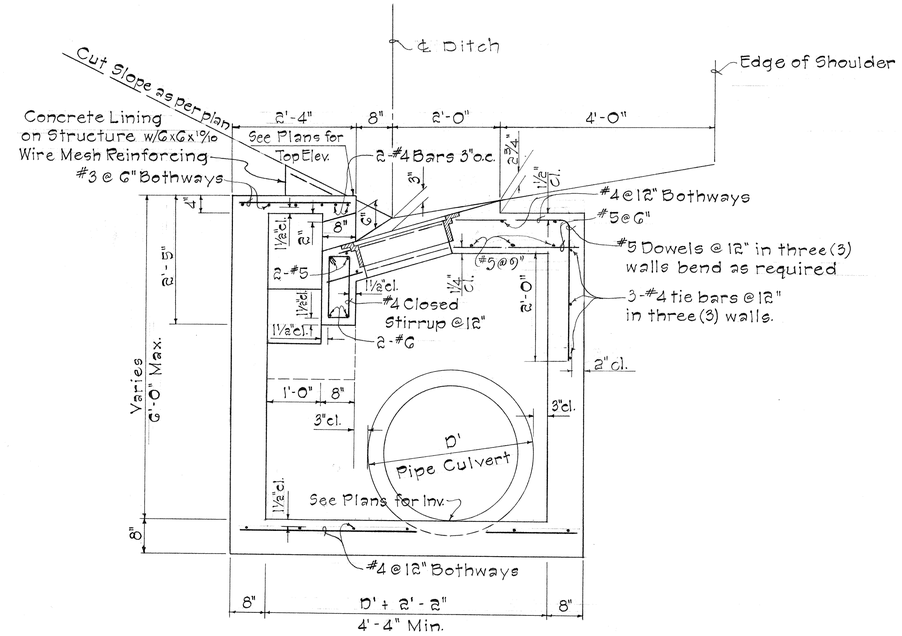

SECTION "B-B"

Scale: 3/4" = 1'-0"

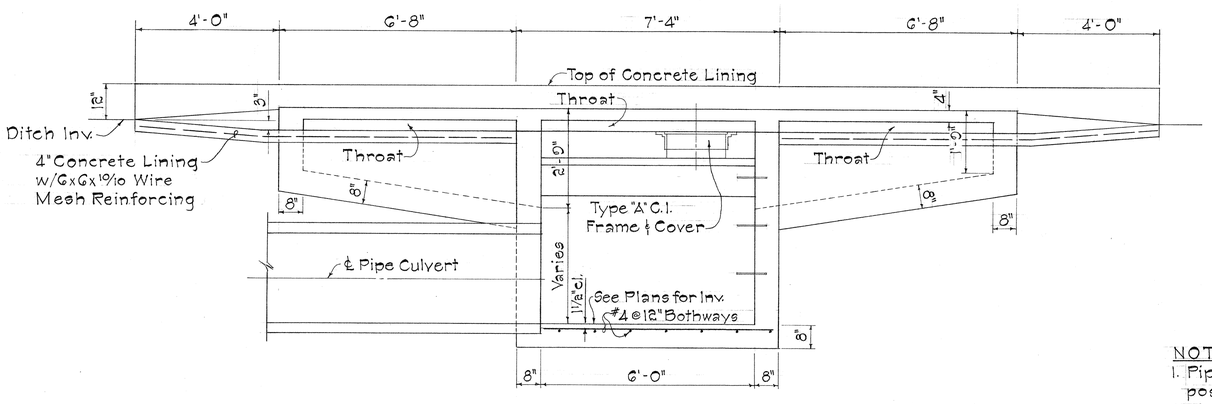

SECTION "A-A"

Scale: 1/2" = 1'-0"

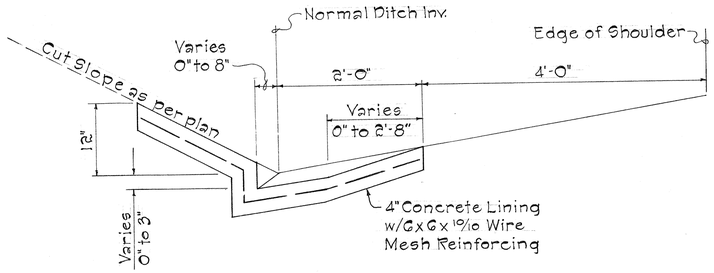

SECTION "C-C"

Scale: 1" = 1'-0"

NOTES:

1. Pipe culvert shall enter and leave C.B. from any position and in the direction indicated by the plans or ordered by the Engineer.
2. D' shall be the maximum outside dimension of the pipe culvert at the C.B. wall.
3. Type "A" C.I. Frame & Cover and Standard Manhole Rungs may be placed at opposite wall if ordered by the Engineer.

DETAILS OF TYPE "A2", "B2", "C2", AND "D2" CATCH BASIN

ORIGINAL PLAN	SURVEY PLOTTED BY	DATE
	DRAWN BY	"
	TRACED BY	"
NOTE BOOK	DESIGNED BY	"
No.	QUANTITIES BY	"
	CHECKED BY	"

STATE OF HAWAII
DEPARTMENT OF TRANSPORTATION
HIGHWAYS DIVISION

DRAINAGE DETAILS
TYPE "A2", "B2", "C2" AND "D2"
CATCH BASIN

INTERSTATE ROUTE H-1
F.A.I. PROJ. NO. I-H1-1(32)5, Unit 3

Scale: As Shown Date: June, 1967

SHEET No. 21 OF 28 SHEETS

50

FED. ROAD DIST. NO.	STATE	FED. AID PROJ. NO.	FISCAL YEAR	SHEET NO.	TOTAL SHEETS
HAWAII	HAW.	I-H1-1(32)5, Unit 3	1967	51	99

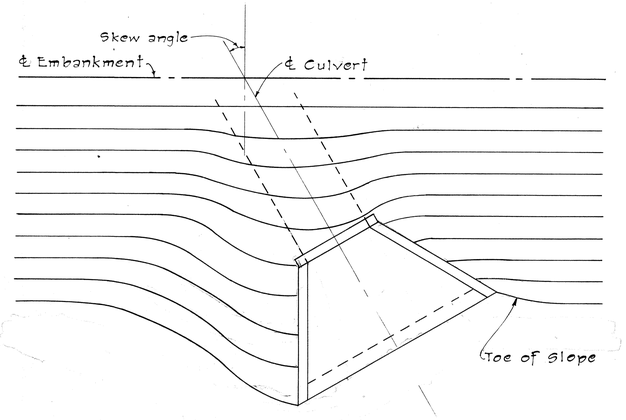

EMBANKMENT CONTOURS FOR SKEWED INLET

When inlet is skewed to embankment slope, the embankment may be contoured to cover the exposed section of wall and pipe.

SUMMARY OF QUANTITIES		
Culvert Dia. inches	Concrete Cu. Yd.	Reinf. Steel Lbs.
48		
54		
60		
72		
84		
96		
108		
120		
144		
180		

Note: Quantities shown are for C.G.M.P. culvert.

GENERAL NOTES

Concrete: All concrete shall be Class A-1.

Cutoff Wall: The depth of wall shown on the plan may be reduced if rock is encountered at a higher elevation.

Mutiple Pipe Installations: To permit careful placing and tamping of back fill material, clear spacing for multiple pipe installations shall be not less than one-half the diameter of the larger pipe between sides of adjacent pipes, but not required to exceed three feet.

Anchor Bolts: Anchor bolts are not required for concrete pipe.

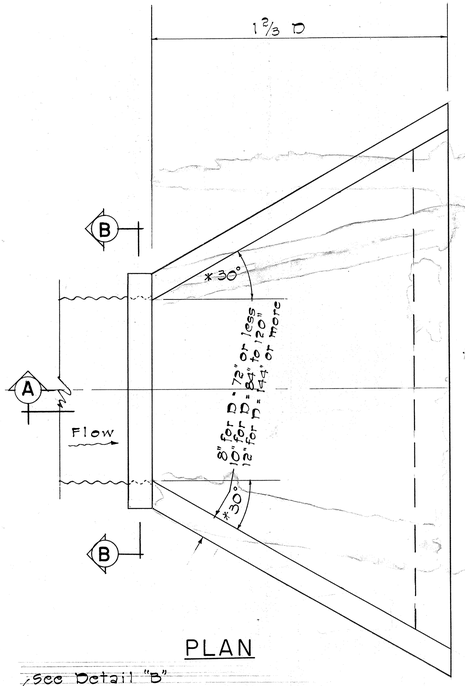

PLAN

* or indicated on plans

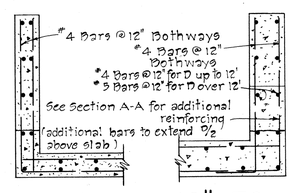

8" WING WALL 10" TO 12" WING WALLS

SECTION C-C

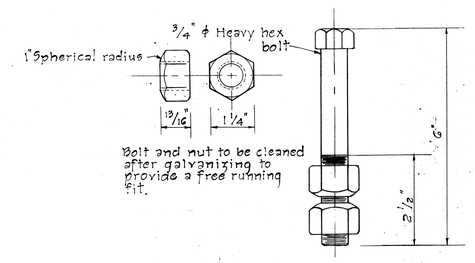

ANCHOR BOLT DETAIL

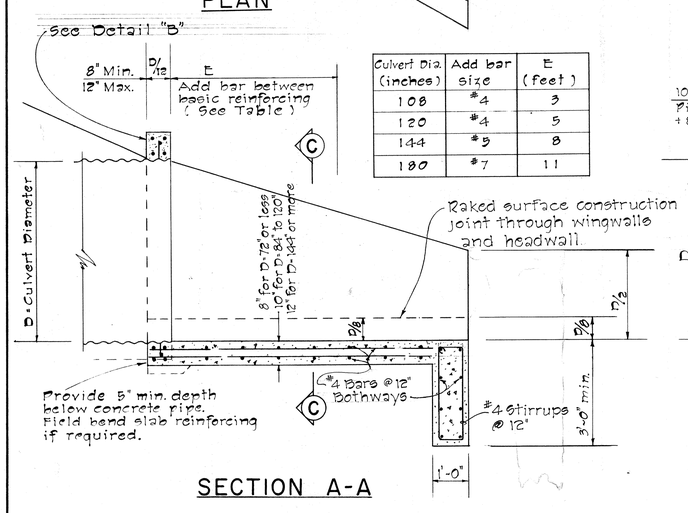

Culvert Dia. (inches)	Add bar size	E (feet)
108	#4	3
120	#4	5
144	#5	8
180	#7	11

SECTION A-A

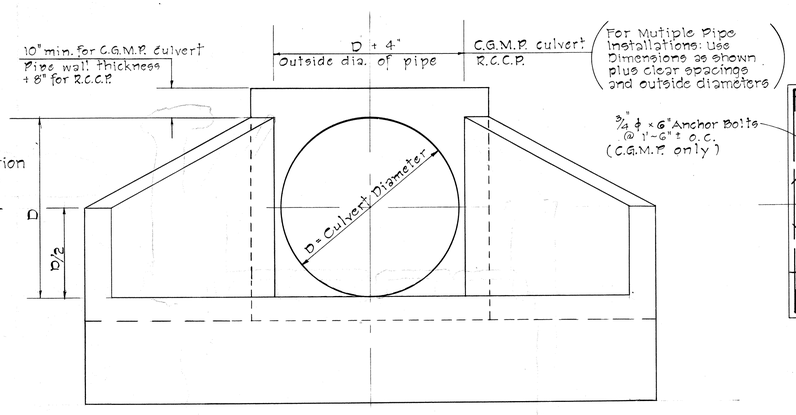

FRONT ELEVATION

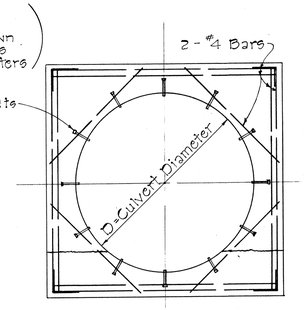

SECTION B-B

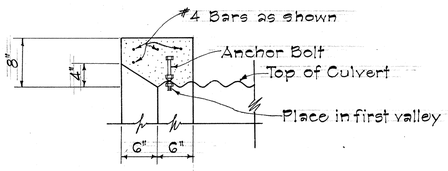

DETAIL "B"
Scale: 1" = 1'-0"

INLET STRUCTURE FOR CULVERT SIZES 48 IN. TO 180 IN. DIAMETER

ORIGINAL PLAN	SURVEY PLOTTED BY	DATE
	DRAWN BY	"
	TRACED BY	"
NOTE BOOK	DESIGNED BY	"
	QUANTITIES BY	"
No.	CHECKED BY	"

STATE OF HAWAII
DEPARTMENT OF TRANSPORTATION
HIGHWAYS DIVISION

DRAINAGE DETAILS
INLET STRUCTURES
FOR
CONCRETE AND CORRUGATED METAL CULVERTS SIZES 48 IN. TO 180 IN.

NOT TO SCALE MAY 1967

SHEET No. 22 OF 28 SHEETS

51

FED. ROAD DIST. NO.	STATE	FED. AID PROJ. NO.	FISCAL YEAR	SHEET NO.	TOTAL SHEETS
HAWAII	HAW.	I-H1-1(32)5, Unit 3	1967	52	99

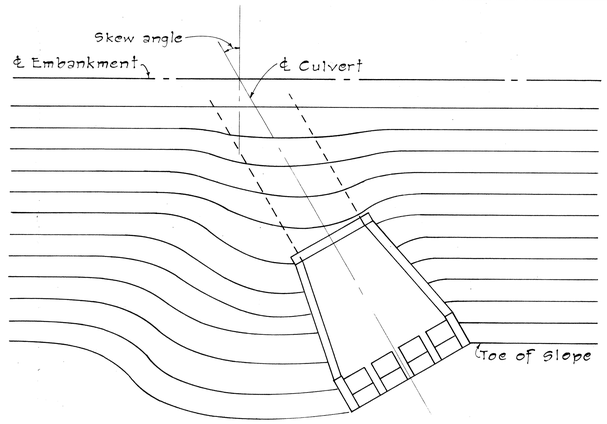

EMBANKMENT CONTOURS FOR SKEWED OUTLET

When outlet is skewed to embankment slope, the embankment may be contoured to cover the exposed section of wall and pipe.

SUMMARY OF QUANTITIES		
Culvert Dia. inches	Concrete Cu. Yd.	Reinf. Steel Lbs.
48		
54		
60		
72		
84	12.7	1270
96	16.2	1570
108	20.3	2010
120	24.8	2460
144	41.8	3610
180	63.8	7090

Note: Quantities shown are for C.G.M.P. culvert.

GENERAL NOTES

Concrete: All concrete shall be Class A-1.

Cutoff Wall: The depth of wall shown on the plan may be reduced if rock is encountered at a higher elevation.

Mutiple Pipe Installations: To permit careful placing and tamping of back fill material, clear spacing for multiple pipe installations shall be not less than one-half the diameter of the larger pipe between sides of adjacent pipes, but not required to exceed three feet.

Anchor Bolts: Anchor bolts are not required for concrete pipe.

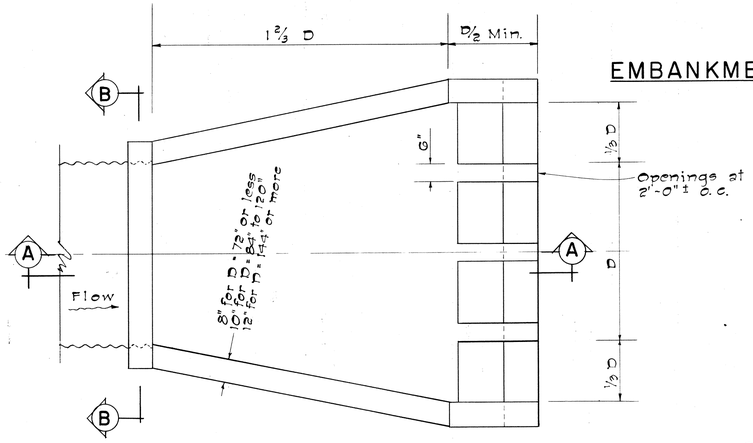

PLAN

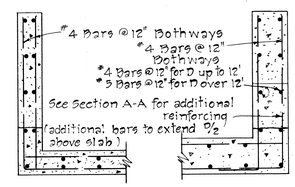

8" WING WALL 10" TO 12" WING WALLS

SECTION C-C

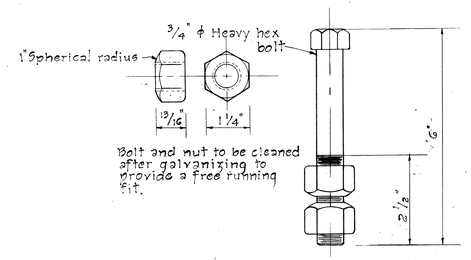

ANCHOR BOLT DETAIL

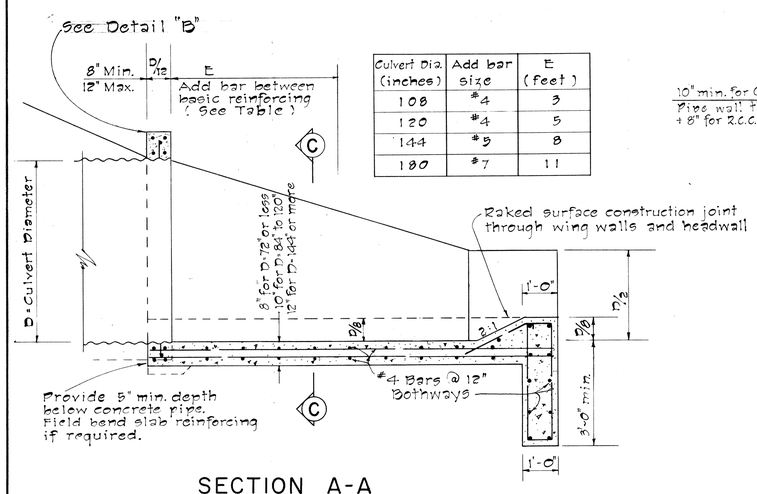

Culvert Dia. (inches)	Add bar size	E (feet)
108	#4	3
120	#4	5
144	#5	8
180	#7	11

SECTION A-A

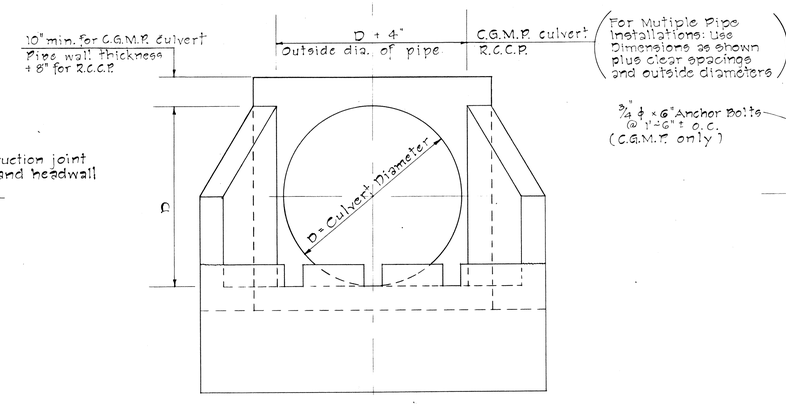

FRONT ELEVATION

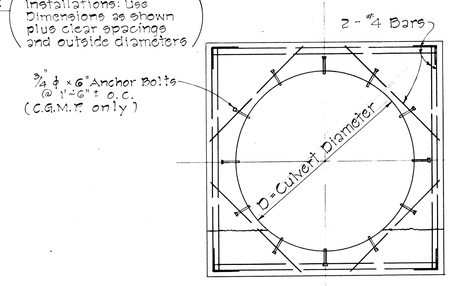

SECTION B-B

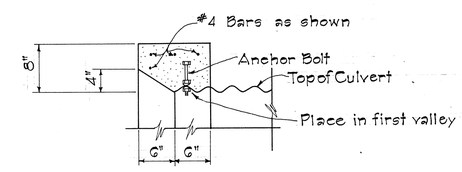

DETAIL "B"

Scale: 1" = 1'-0"

OUTLET STRUCTURE FOR CULVERT SIZES 48 IN. TO 180 IN. DIAMETER

ORIGINAL PLAN		
	SURVEY PLOTTED BY	DATE
	DRAWN BY	" "
	TRACED BY	" "
NOTE BOOK	DESIGNED BY	" "
	QUANTITIES BY	" "
No.	CHECKED BY	" "

STATE OF HAWAII
DEPARTMENT OF TRANSPORTATION
HIGHWAYS DIVISION

DRAINAGE DETAILS
OUTLET STRUCTURES
FOR
CONCRETE AND CORRUGATED METAL CULVERTS SIZES 48 IN. TO 180 IN.

NOT TO SCALE MAY 1967

SHEET No. 23 OF 28 SHEETS

52

FED. ROAD DIST. NO.	STATE	FED. AID PROJ. NO.	FISCAL YEAR	SHEET NO.	TOTAL SHEETS
HAWAII	HAW.	I-HI-1(32):5 Unit 3	1967	53	99

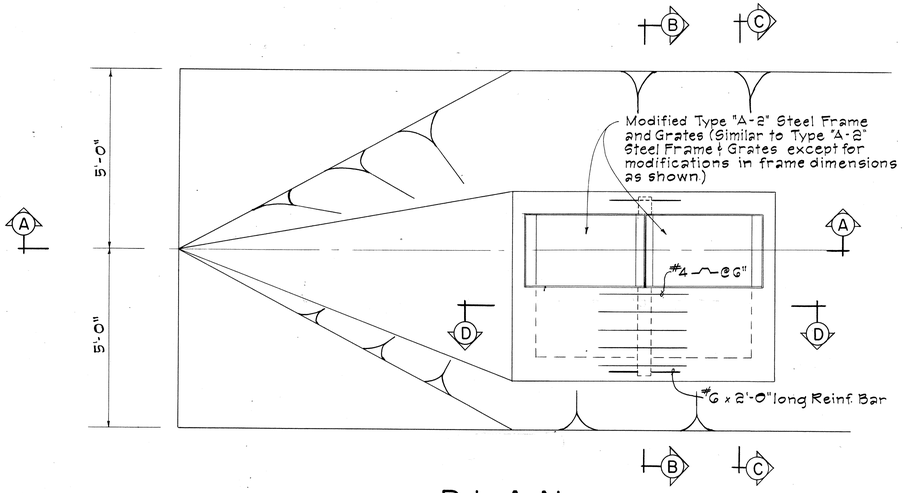

PLAN
Scale: 1/2" = 1'-0"

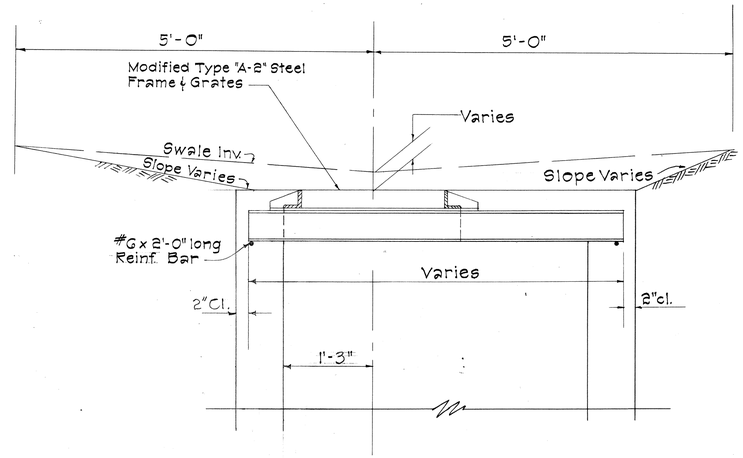

SECTION B-B
Scale: 1" = 1'-0"

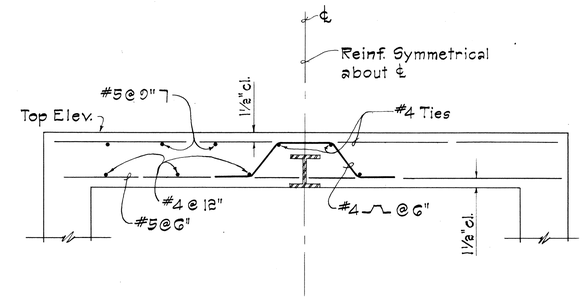

SECTION D-D
Scale: 1" = 1'-0"

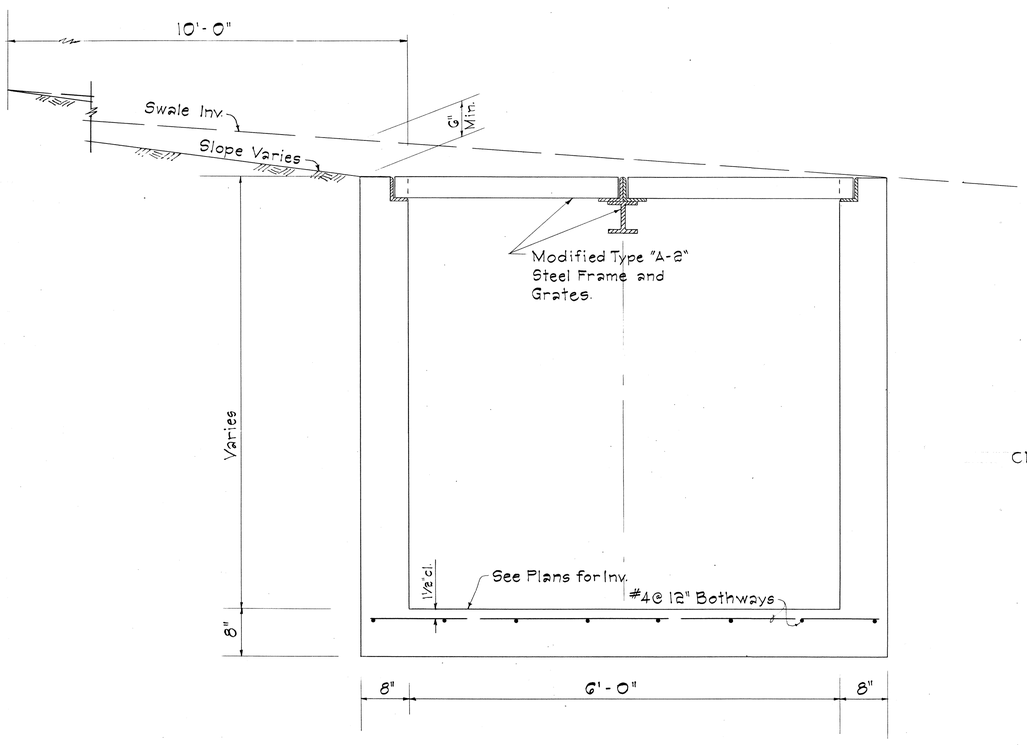

SECTION A-A
Scale: 1" = 1'-0"

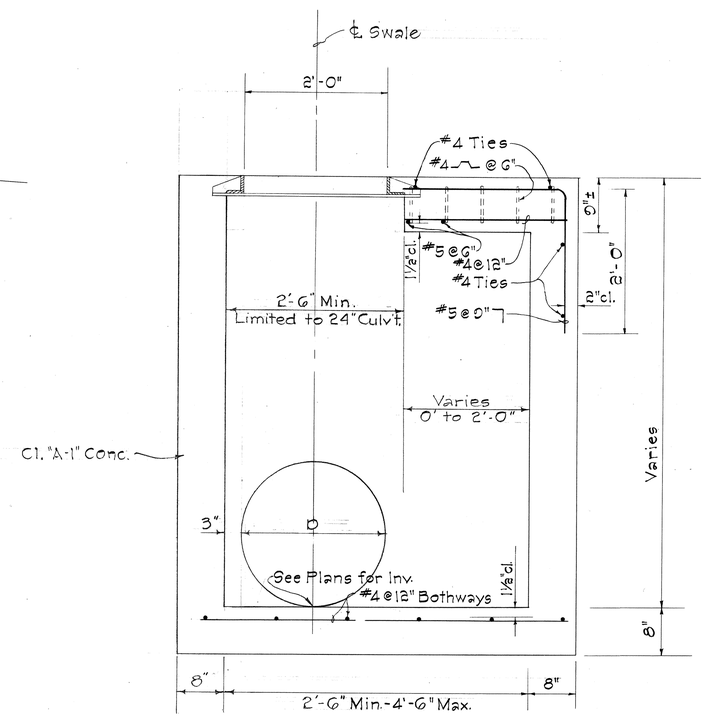

SECTION C-C
Scale: 1" = 1'-0"

ORIGINAL PLAN	SURVEY PLOTTED BY	DATE
	DRAWN BY	" "
	TRACED BY	" "
	DESIGNED BY	" "
NOTE BOOK	COMPUTED BY	" "
No.	CHECKED BY	" "

STATE OF HAWAII
DEPARTMENT OF TRANSPORTATION
HIGHWAYS DIVISION

DRAINAGE DETAILS
MEDIAN DROP INTAKE

INTERSTATE ROUTE H-1
F.A.I. PROJ. NO. I-HI-1(32):5, Unit 3

Scale: As Shown — Date: June, 1967

SHEET No. 24 OF 28 SHEETS

53

FED. ROAD DIST. NO.	STATE	FED. AID PROJ. NO.	FISCAL YEAR	SHEET NO	TOTAL SHEETS
HAWAII	HAW.	I-H1-1(32)5 Unit 3	1967	54	99

Revised: June 1965
Revised: August 1967

DATA FOR OUTLET DITCH			
D	W	H	T=W+H
18"	24"	2'-0"	4'-0"
24"	30"	2'-0"	4'-6"
30"	30"	2'-6"	5'-0"
36"	36"	3'-0"	6'-0"

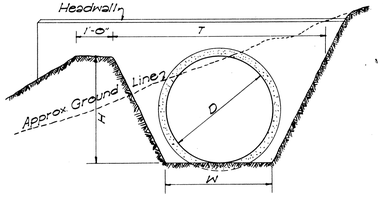

DETAIL OF OUTLET DITCH

Scale: 1/2" = 1'-0"

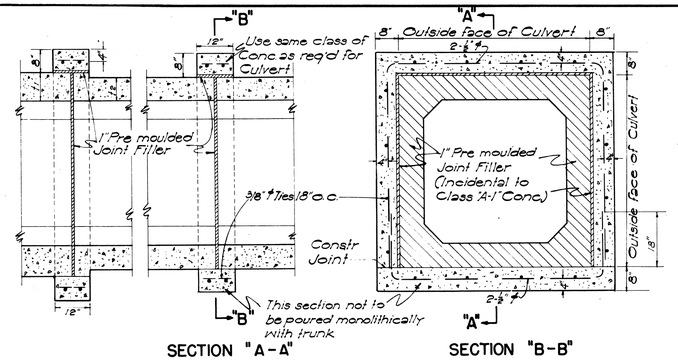

SECTION "A-A" SECTION "B-B"

CONC. COLLAR FOR CONC. BOX CULVERT

Scale: 1/2" = 1'-0"

DATA FOR MASONRY DROP INTAKE				Where Variables Equal
D'	D	L=D'+6"	Cu Yds.	
23"	18"	2'-5"	3.02	4'-6"
30"	24"	3'-0"	3.61	5'-0"
37"	30"	3'-7"	4.21	5'-6"
44"	36"	4'-2"	4.85	6'-0"

NOTE:
Dimension "X" is assumed as 2'-4" in figuring the above quantities.

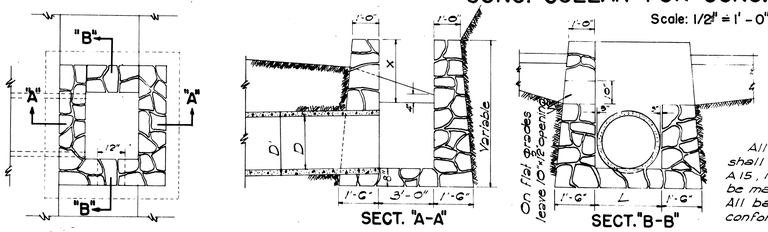

REINFORCING BARS
All reinforcing bars for concrete shall be Billet Steel bars, ASTM A15, intermediate grade. Steel shall be made by the open-hearth process. All bars shall be deformed type conforming to ASTM A-305.

DETAIL OF MASONRY DROP INTAKE

Scale: 3/8" = 1'-0"

Note: To Resident Engineer
1) Consider economy of reinf. conc for high retaining walls which did not originate on plan layout.
2) Elevation of weep holes to be determined by Resident Engineer. Holes to be placed as close to the existing ground line as local conditions permit.

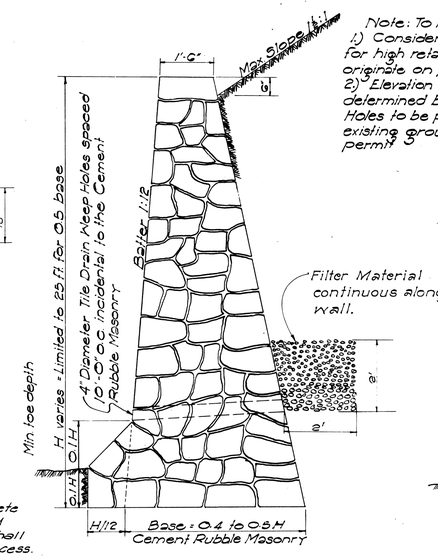

SECTION OF HIGH CEMENT RUBBLE MASONRY RETAINING WALL OR SEAWALL

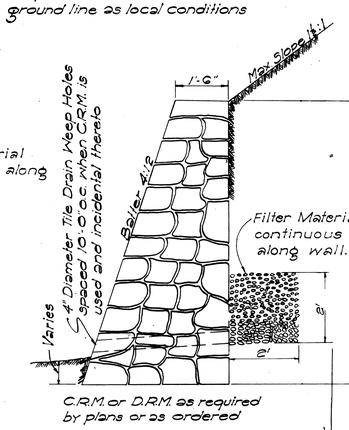

SECTION OF LOW MASONRY RETAINING WALL OR SEAWALL

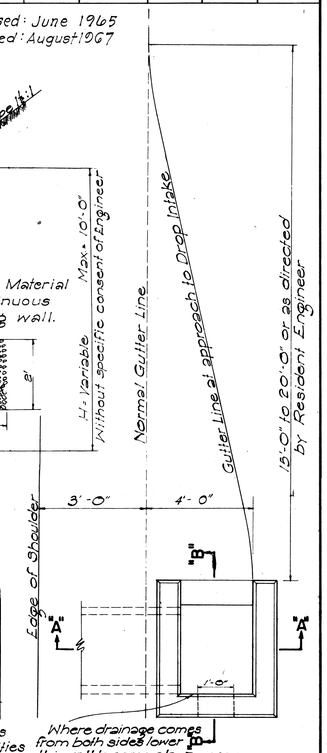

Where drainage comes from both sides lower this wall to same elevation as shown for opposite wall.

PLAN

DATA-CONC. DROP INTAKE					Where Variable Equals
D'	D	L=D'+6"	S	Cu Yds	
23"	18"	2'-5"	8"	1.41	4'-6"
30"	24"	3'-0"	8"	1.72	5'-0"
37"	30"	3'-7"	9"	2.32	5'-6"
44"	36"	4'-2"	9"	2.73	6'-0"
51"	42"	4'-9"	10"	3.54	6'-6"
58"	48"	5'-4"	10"	4.01	7'-0"

Note: Dimension "X" is assumed as 2'-4" in figuring the above quantities

Note: This type of structure shall also be used for the Drop Intakes of Syphons connected with Irrigation Ditches or Flumes with appropriate changes to dimensions. In this case all joints must be made water tight.

Excavate recess in roadway excavation slope for inlet to dimensions and form designated by Engineer. This is "Unclassified Excavation."

Top limits of structure excavation other than at bridges.

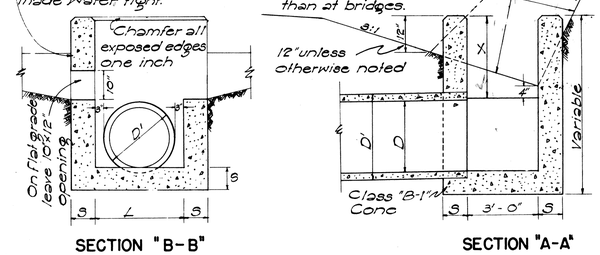

SECTION "B-B" SECTION "A-A"

DETAIL OF CONCRETE DROP INTAKE

Scale: 1/2" = 1'-0"

DATA-MASONRY HEADWALL				CRM for RCCP	CRM for CGMP
D	H	B	L	Cu Yds.	Cu Yds.
18"	4'-6"	1'-0"	6'-0"	1.24	1.20
24"	5'-0"	2'-0"	7'-6"	1.83	1.98
30"	5'-6"	2'-3"	9'-0"	2.59	2.70
36"	6'-0"	2'-6"	10'-6"	3.45	3.66

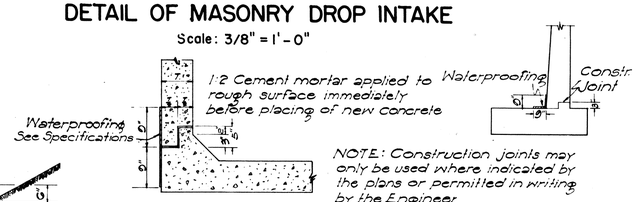

CONSTR. JOINT DETAILS

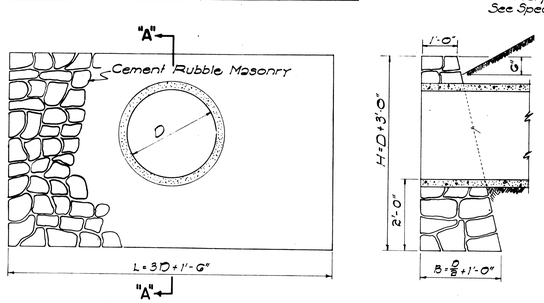

ELEVATION SECT. "A-A"

DETAIL OF MASONRY HEADWALL

Scale: 1/2" = 1'-0"

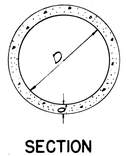

SECTION

CONC. PIPE CULVERT

NOTE:
Thickness "d", reinforcing, and Concrete used, are to conform with the approved design as provided by the Specifications.

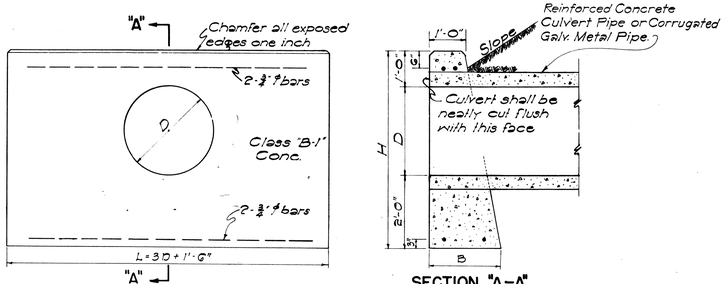

ELEVATION SECTION "A-A"

DATA FOR CONC. HEADWALL				Cl. "B-1" Conc. For RCCP	Cl. "B-1" Conc. For CGMP	Steel For One Headwall			
D	B	L	H	Cu Yd.	Cu Yd.	No. of Bars	Size	Length	Lbs.
18"	1'-6"	6'-0"	4'-6"	1.12	1.17	4	¾" ϕ	8'-6"	38
24"	1'-6"	7'-6"	5'-0"	1.52	1.60	4	¾" ϕ	7'-0"	42
30"	2'-0"	9'-0"	5'-6"	2.36	2.49	4	¾" ϕ	8'-6"	51
36"	2'-0"	10'-6"	6'-0"	3.04	3.13	4	¾" ϕ	10'-0"	60
42"	2'-6"	12'-0"	6'-6"	4.10	4.47	4	¾" ϕ	11'-6"	69
48"	2'-6"	13'-6"	7'-0"	5.01	5.36	4	¾" ϕ	13'-0"	78

DETAIL OF CONCRETE HEADWALL

Scale: 1/2" = 1'-0"

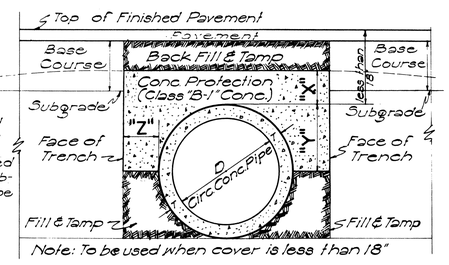

Note:
When subgrade is below top of jacket, it shall be fully compacted to this line, and then re-excavated (struc. exc.) to proper subgrade. This surface shall be rolled again.

Note: To be used when cover is less than 18"

DATA FOR CONCRETE PROTECTION OVER CULVERTS		
X	Y	Z
6" for 18" D	D/2 + T	Z must be from pipe to face of trench
7" " 24" D		Minimum = X
8" " 30" D		Maximum pay quantity will be Z = 12"
9" " 36" D		
10" " 42" D		
11" " 48" D		
12" " 54" D		

SECT. OF CULVERT WITH CONC. PROTECTION

Scale: 1" = 1'-0"

STATE OF HAWAII
DEPARTMENT OF TRANSPORTATION
HIGHWAYS DIVISION

STANDARD DETAILS

DROP INTAKES, RETAINING WALLS, HEADWALLS, CONSTRUCTION JOINTS

SCALES AS NOTED

SHEET № 25 OF 28 SHEETS

ORIGINAL PLAN — PLANS PROFILED BY — DESIGNED BY — DRAWN BY L. Calisto — TRACED BY — QUANTITIES — CHECKED BY — SHEET NO. — DATE — No.

54

FED. ROAD DIST. NO.	STATE	FED. AID. PROJECT	FISCAL YEAR	SHEET NO.	TOTAL SHEETS
HAWAII	HAWAII	I-H1-1(32)5 Unit 3	1967	55	99

Revised: Jan. 25, 1967

NOTE:

1. All welds 3/8" unless otherwise noted.
2. All steel shall be structural grade.
3. Grates and Frame shall be hot dip galvanized after fabrication in accordance with Section 44(H) of the Standard Specifications.
4. Detail of Types "A-1" and "A-2" Steel Frame and Grates are identical except for the thickness of end spacers and number of grate bars. See Table of End Spacer Thickness.

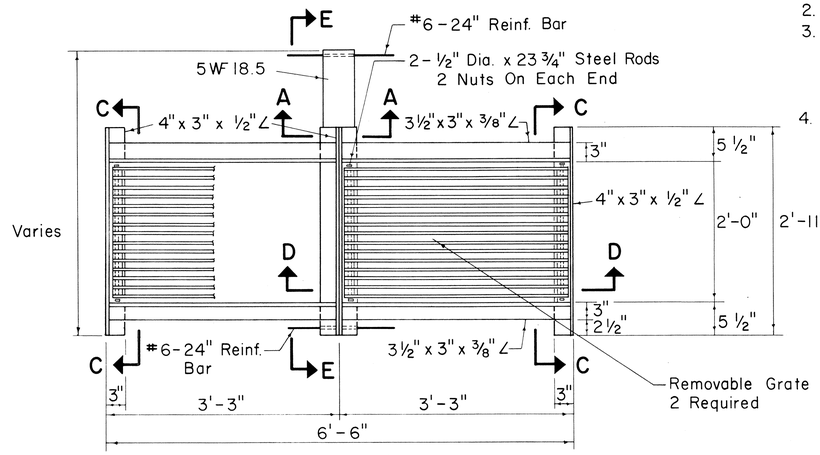

PLAN

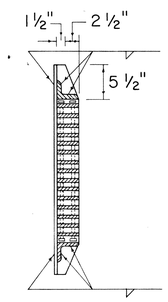

SECTION C-C

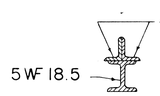

SECTION A-A

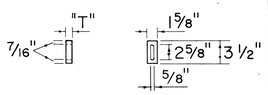

END SPACER

TABLE OF END SPACER THICKNESS

TYPE FRAME & GRATES	"T" (in.)
A-1	1
A-2	1 3/8

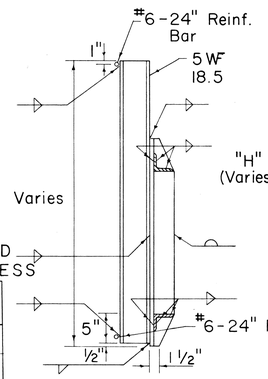

SECTION E-E

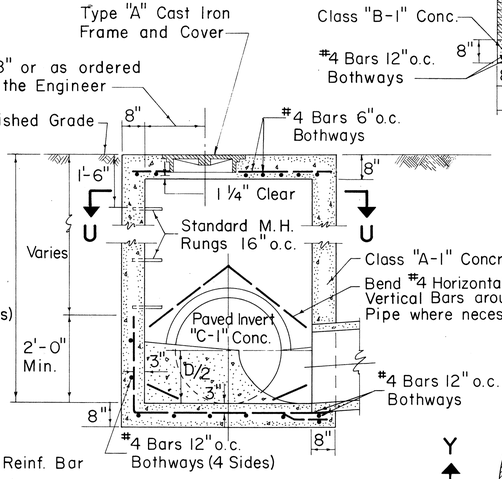

SECTION V-V

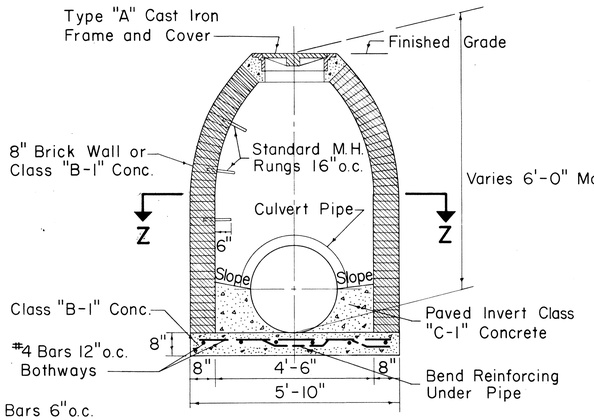

SECTION Y-Y

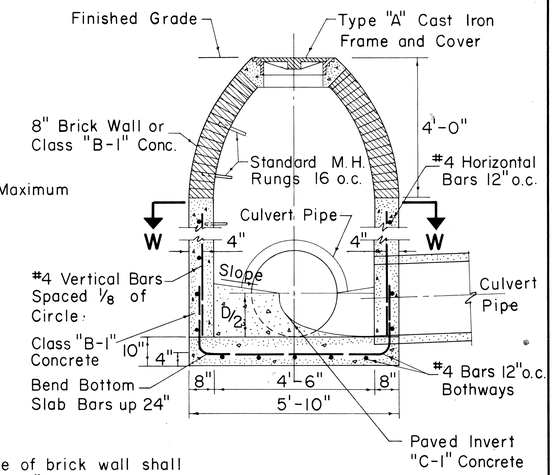

SECTION X-X

NOTE:

1. Exterior surface of brick wall shall be plastered with 1" thickness of 1:2 Cement Mortar.
2. Number size and direction of culvert pipes at manhole to be as shown on plans.
3. Paved invert not required at drop manholes.
4. All Class "C-1" Concrete to be incidental to Class "B-1" Concrete.

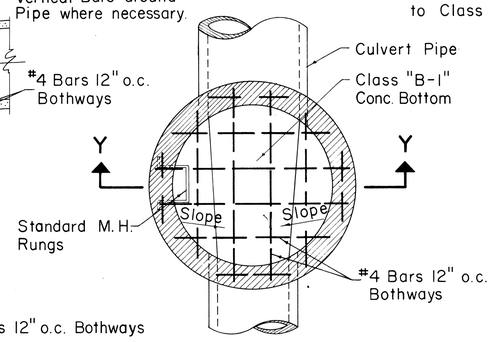

SECTION Z-Z

TYPE "D" STORM DRAIN MANHOLE

Scale: 1/2" = 1'-0"

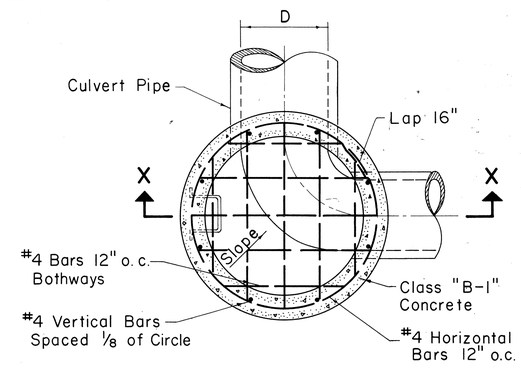

SECTION W-W

TYPE "E" STORM DRAIN MANHOLE

Scale: 1/2" = 1'-0"

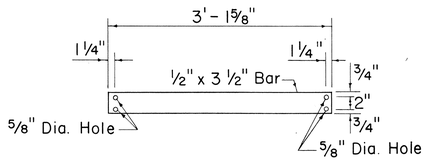

GRATE BARS

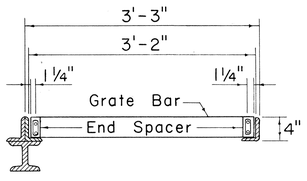

SECTION D-D

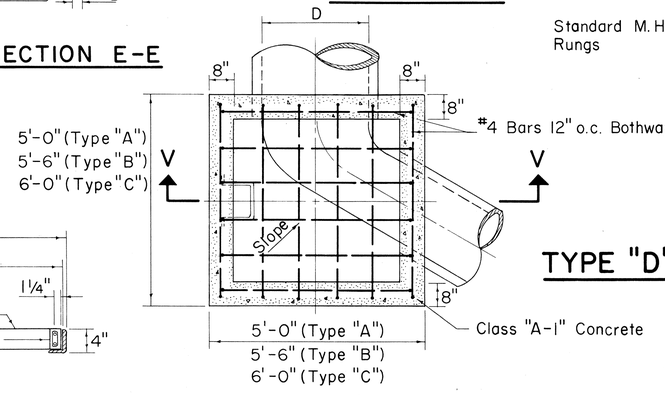

SECTION U-U

TYPE "A", "B", & "C"

S.D.M.H.

Scale: 1/2" = 1'-0"

DETAIL OF TYPE "A-1" & "A-2" STEEL FRAME AND GRATES

Scale: 1" = 1'-0"

STATE OF HAWAII
DEPARTMENT OF TRANSPORTATION
HIGHWAYS DIVISION

STANDARD DETAILS

STEEL FRAME AND GRATES AND STORM DRAIN MANHOLES

Scales: As Noted | Date: June, 1967

SHEET NO. 26 OF 28 SHEETS

55

2/17/59
8/14/59

FED. ROAD DIST. NO.	STATE	FED. AID PROJ. NO.	FISCAL YEAR	SHEET NO.	TOTAL SHEETS
HAWAII	HAW	I-H1-1(22)5	1967	56	77

August 1957 Unit 3

NOTE: Stock Pattern From Novelty Foundry ~ Honolulu

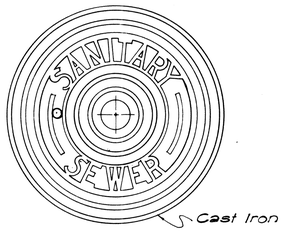

TOP VIEW OF COVER

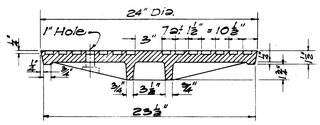

SECTION

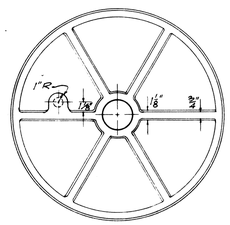

BOTTOM VIEW OF COVER

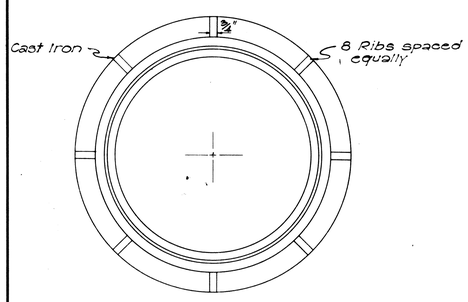

PLAN OF RIM

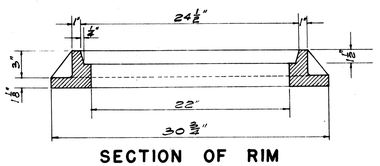

SECTION OF RIM

DETAILS OF TYPE "S" CAST IRON FRAME AND COVER

SCALE: 1-1/2" = 1'-0"

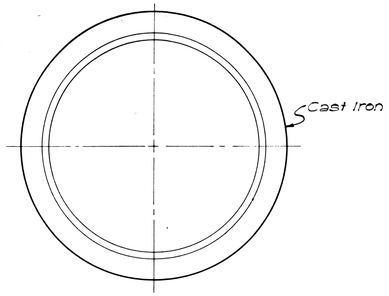

PLAN OF RIM

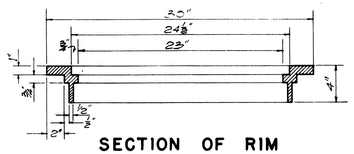

SECTION OF RIM

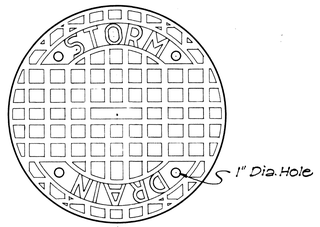

TOP VIEW OF COVER

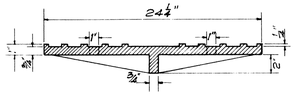

SECTION

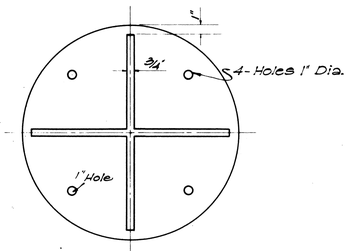

BOTTOM VIEW OF COVER

DETAILS OF TYPE "B" CAST IRON FRAME AND COVER

SCALE: 1-1/2" = 1'-0"

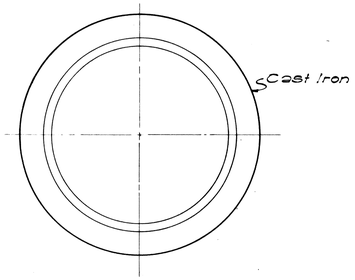

PLAN OF RIM

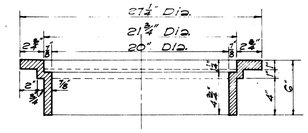

SECTION OF RIM

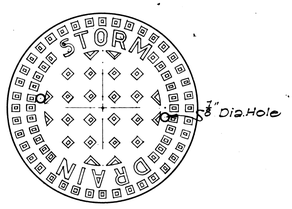

TOP VIEW OF COVER

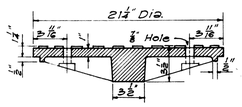

SECTION

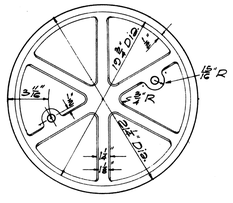

BOTTOM VIEW OF COVER

DETAILS OF TYPE "A" CAST IRON FRAME AND COVER

SCALE: 1-1/2" = 1'-0"

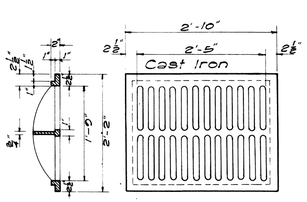

SECTION

TOP VIEW

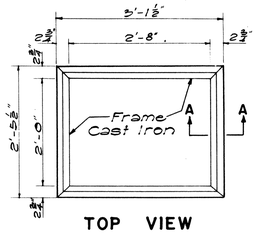

TOP VIEW

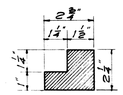

SECTION "A-A"
SCALE 3" = 1'-0"

TYPE C C.I. FRAME AND GRATING

SCALE: 3/4" = 1'-0"

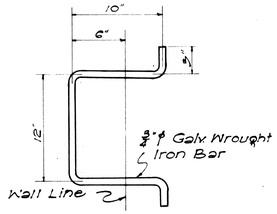

MANHOLE RUNG

SCALE: 1-1/2" = 1'-0"

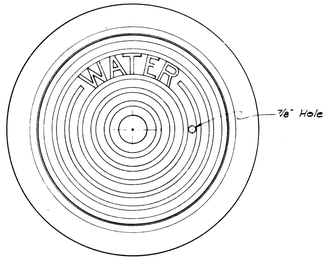

PLAN OF FRAME AND COVER

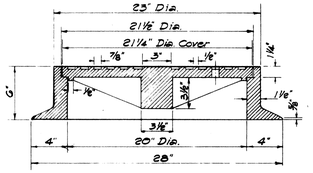

SECTION OF FRAME AND COVER

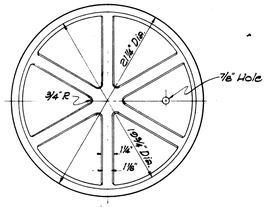

BOTTOM VIEW OF COVER

DETAILS OF TYPE "W" CAST IRON FRAME AND COVER

SCALE: 1-1/2" = 1'-0"

NOTE:

THE TYPE "S" CAST IRON FRAME AND COVER SHOWN ON THIS SHEET IS EQUIVALENT TO THE CITY AND COUNTY OF HONOLULU, DIVISION OF SEWERS' TYPE "A" CAST IRON MANHOLE FRAME AND COVER.

THE TYPE "W" CAST IRON FRAME AND COVER SHOWN ON THIS SHEET IS EQUIVALENT TO THE CITY AND COUNTY OF HONOLULU, BOARD OF WATER SUPPLY'S CAST IRON MANHOLE FRAME AND COVER, 20" SIZE.

STATE OF HAWAII
DEPARTMENT OF TRANSPORTATION
HIGHWAYS DIVISION

STANDARD DETAILS

CATCH BASIN AND MANHOLE CASTINGS

SCALES AS NOTED

SHEET No 27 OF 28 SHEETS

56 (6)

ORIGINAL PLAN		DATE
	SURVEY PLOTTED BY	
	DESIGNED BY	"
	DRAWN BY	"
	TRACED BY J. Calistro	"
NOTE BOOK	QUANTITIES BY	"
No.	CHECKED BY	

FED. ROAD DIST. NO.	STATE	FED. AID PROJ. NO.	FISCAL YEAR	SHEET NO.	TOTAL SHEETS
HAWAII	HAWAII	F-HI-I(32)-5, Unit 3	1967	57	99

Revised : Oct. 1966

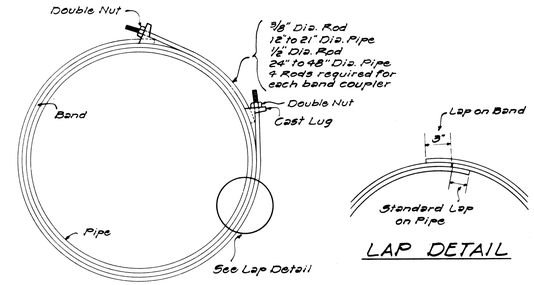

END VIEW

LAP DETAIL

NOTE:
Each watertight band coupler to be supplied with neoprene sponge rubber gasket.

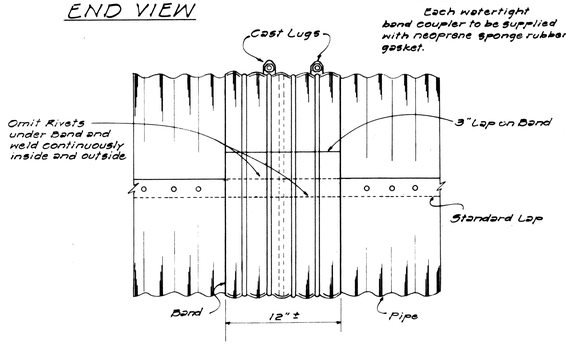

SIDE VIEW

DETAIL OF WATERTIGHT BAND COUPLER

NOT TO SCALE

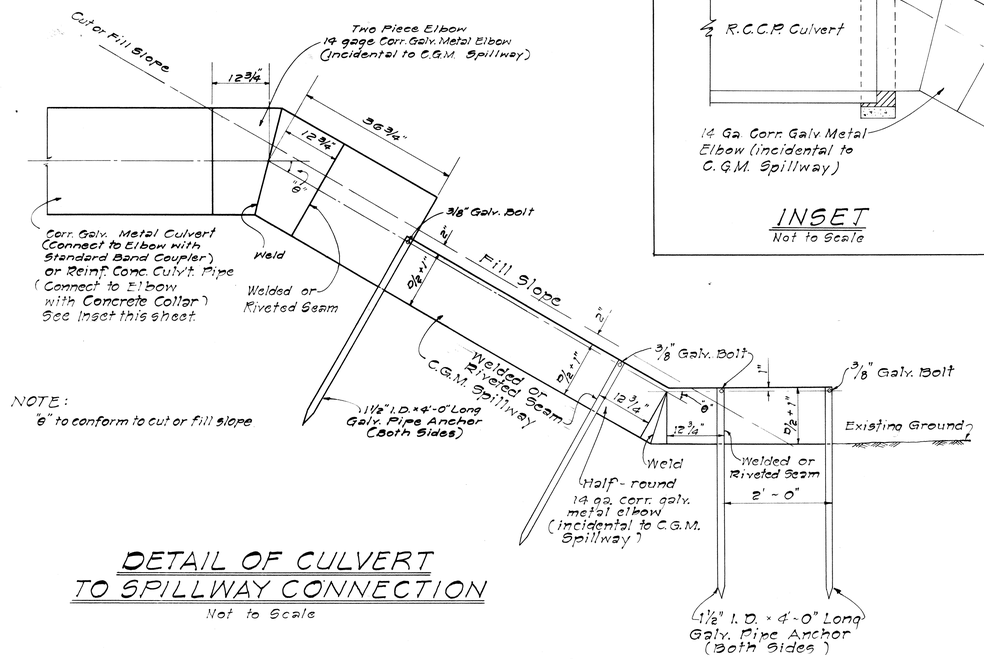

DETAIL OF CULVERT TO SPILLWAY CONNECTION

Not to Scale

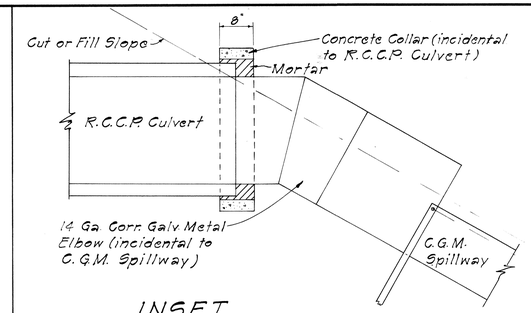

INSET

Not to Scale

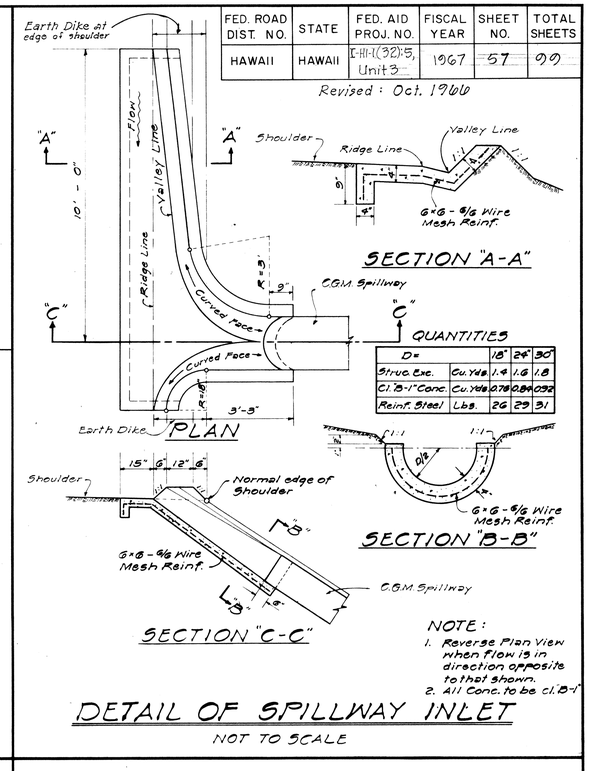

QUANTITIES

D=		18"	24"	30"
Struc. Exc.	Cu. Yds.	1.4	1.6	1.8
Cl. "B-1" Conc.	Cu. Yds.	0.78	0.84	0.92
Reinf. Steel	Lbs.	26	29	31

NOTE:
1. Reverse Plan View when flow is in direction opposite to that shown.
2. All Conc. to be cl. "B-1"

DETAIL OF SPILLWAY INLET

NOT TO SCALE

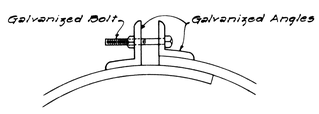

BAND DETAIL

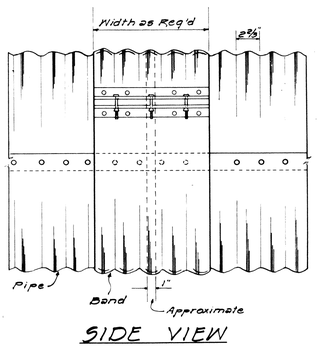

SIDE VIEW

DETAIL OF STANDARD BAND COUPLER

NOT TO SCALE

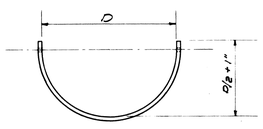

SECTION "D-D"

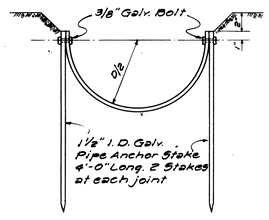

END VIEW

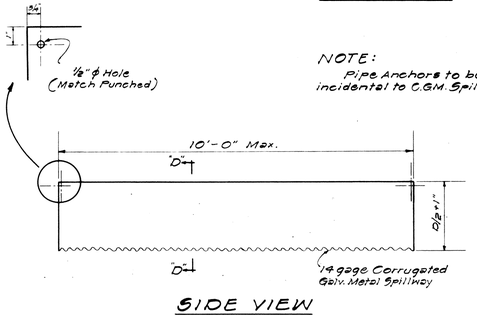

NOTE:
Pipe Anchors to be incidental to C.G.M. Spillway

SIDE VIEW

C.G.M. SPILLWAY

NOT TO SCALE

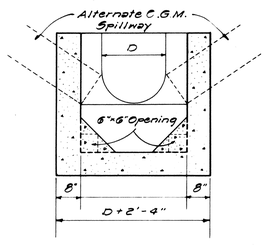

SECTION "H-H"

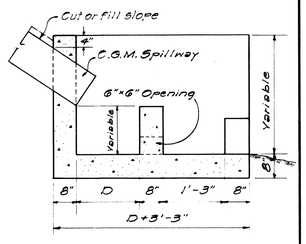

SECTION "G-G"

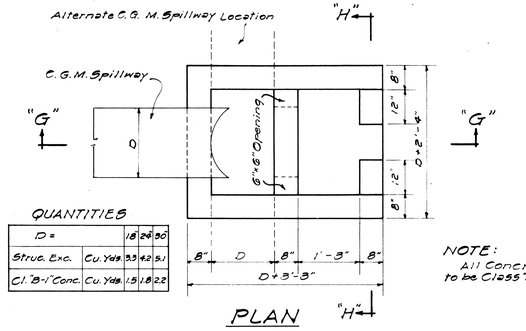

QUANTITIES

D=		18"	24"	30"
Struc. Exc.	Cu. Yds.	3.3	4.2	5.1
Cl. "B-1" Conc.	Cu. Yds.	1.5	1.8	2.2

PLAN

NOTE:
All Concrete to be Class "B-1"

DETAILS OF CONC. DROP BOX AT OUTLET OF C.G.M. SPILLWAY

NOT TO SCALE

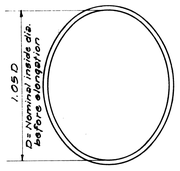

SPECIAL ELLIPTICAL FACTORY SHAPE (WITHOUT STRUTS)

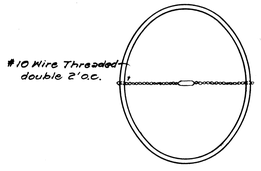

ELONGATED AND WIRE STRUTTED

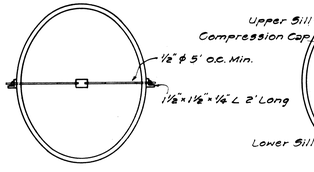

ELONGATED WITH ROD AND TURNBUCKLE

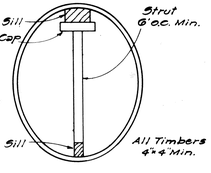

ELONGATED WITH TIMBER STRUT

METHOD OF ELONGATING AND STRUTTING CORRUGATED PIPE

NOT TO SCALE

APPROVED: DATE 8-14-61

DIRECTOR OF TRANSPORTATION

STATE OF HAWAII
DEPARTMENT OF TRANSPORTATION
HIGHWAYS DIVISION

STANDARD DETAILS

CORRUGATED GALVANIZED METAL CULVERTS, SPILLWAYS, AND SPECIAL DETAILS

SCALES AS NOTED

SHEET № 28 OF 28 SHEETS

ORIGINAL PLAN		DATE
	SURVEY PLOTTED BY	
	DRAWN BY R.Y.	5-24-61
	TRACED BY	
	DESIGNED BY O.M.	5-24-61
NOTE BOOK	QUANTITIES BY	
No.	CHECKED BY	