FED. ROAD DIST. NO.	STATE	FED. AID PROJ. NO.	FISCAL YEAR	SHEET NO.	TOTAL SHEETS
HAWAII	HAW.	I-HI-1(31) Unit 1	1967	31	292

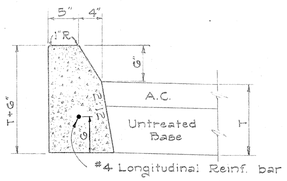

TYPE "A" CURB

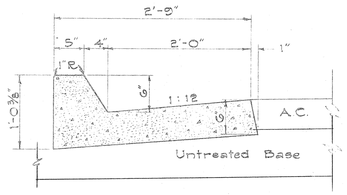

TYPE "AG" CURB & GUTTER

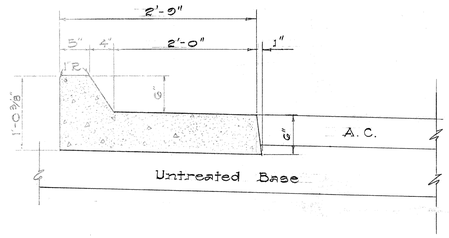

TYPE "AG-M" CURB & GUTTER

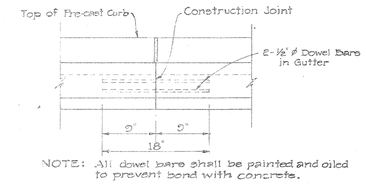

CONSTRUCTION JOINT DETAIL FOR TYPE "A" C.I.P. GUTTER

Scale: 1" = 1'-0"

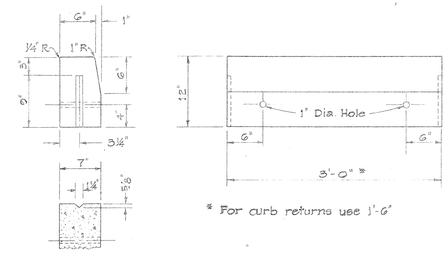

* For curb returns use 1'-6"

PRECAST CONCRETE CURB

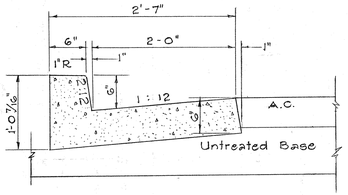

TYPE "DG" CURB & GUTTER

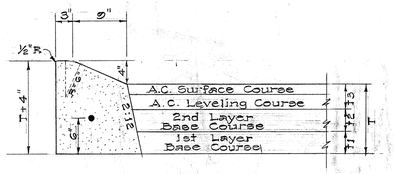

TYPE "E" CAST-IN-PLACE CONCRETE CURB

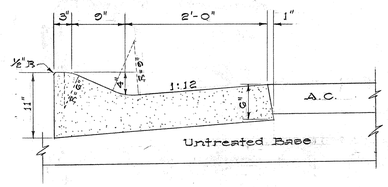

TYPE "EG" CURB & GUTTER

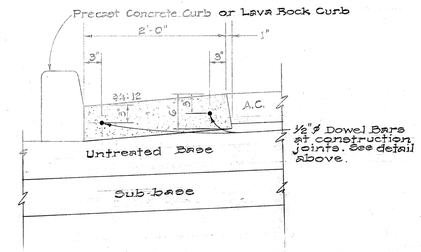

Note: See Transverse weakened plane joint detail on this sheet.

TYPE "A" CAST-IN-PLACE GUTTER

Scale: 1" = 1'-0"

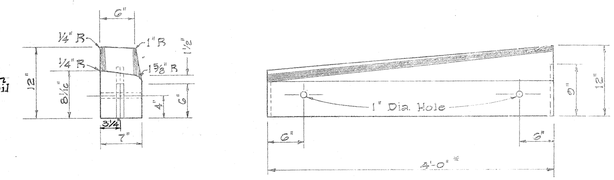

Note:
* - Reduce to 3'-0" where shown on plans.

PRECAST CONCRETE DROP CURB

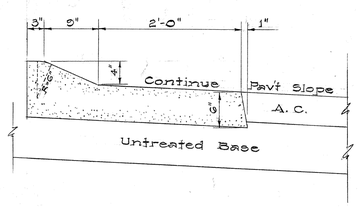

TYPE "EGS" CURB & GUTTER

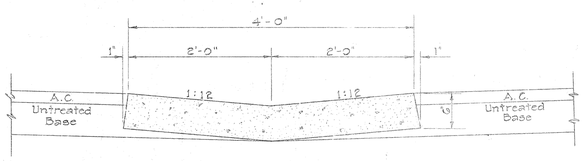

TYPE "G" GUTTER

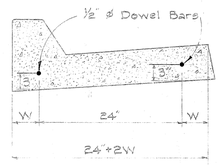

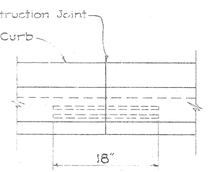

NOTE:
All dowel bars shall be painted and oiled to prevent bond with concrete.

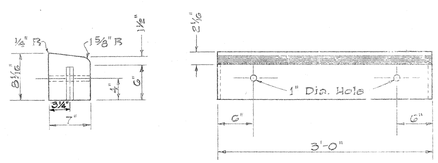

PRECAST CONCRETE DRIVEWAY CURB

PRECAST CONCRETE CURBS

Scale: 1" = 1'-0"

DETAIL OF CAST-IN-PLACE CURBS, GUTTERS, AND CURBS & GUTTERS

Scale: 1" = 1'-0"

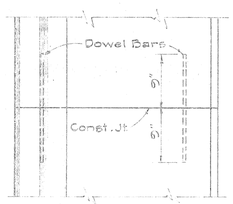

TYPICAL CONSTRUCTION JOINT DETAIL FOR CAST-IN-PLACE CONCRETE CURB & GUTTER

Scale: 1" = 1'-0"

PAYMENT FOR CURB AND CURB & GUTTER TRANSITIONS

TYPE OF TRANSITION		MEASURED FOR PAYMENT AS:
From	To	
C.I.P. curb or Pre-Cast Curb	C.I.P. Curb & Gutter	C.I.P. Curb & Gutter
C.I.P. Curb & Gutter	Pre-Cast Curb & C.I.P. Gutter	C.I.P. Curb & Gutter
C.I.P. Curb & Gutter Type	C.I.P. Curb & Gutter Type	C.I.P. Curb & Gutter ½ of Transition to each type
C.I.P. Curb Type	C.I.P. Curb Type	C.I.P. Curb ½ of Transition to each type
Bridge Abutments	C.I.P. Curb and/or Gutter or Pre-Cast Curb or Lava Rock Curb	C.I.P. Curb and/or Gutter or Pre-Cast Curb or Lava Rock Curb

NOTE: C.I.P. = Cast-in-Place

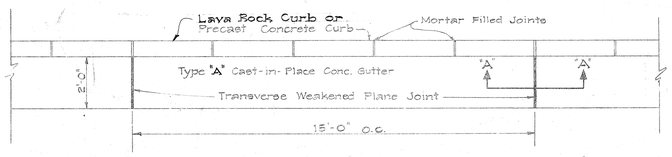

PLAN

Scale: 3/8" = 1'-0"

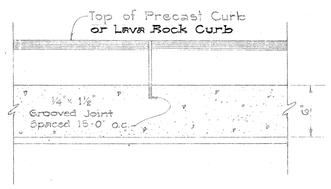

SECTION "A-A"

Scale: 1 1/2" = 1'-0"

TRANSVERSE WEAKENED PLANE JOINT DETAIL FOR TYPE "A" CAST-IN-PLACE CONC. GUTTERS

Scale: As Shown

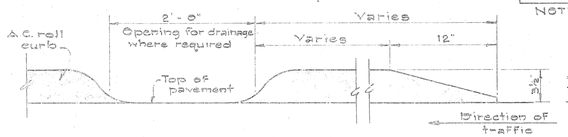

ELEVATION

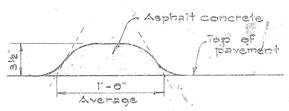

SECTION

A.C. TRAFFIC ROLL CURB

Not to Scale

STATE OF HAWAII
DEPARTMENT OF TRANSPORTATION

DETAILS FOR CONCRETE CURBS AND GUTTERS

INTERSTATE ROUTE H-1
(LUNALILO FREEWAY)
Pele Street to Victoria Street
F.A.I. Proj. No. I-HI-1(31), Unit 1

Scale: As Shown Date: April, 1966

SHEET № 1 OF 10 SHEETS

ORIGINAL PLAN	SURVEY PLOTTED BY	DATE
	DRAWN BY	
	TRACED BY	
NOTE BOOK	DESIGNED BY	
	QUANTITIES BY	
No.	CHECKED BY	

33 1

SPECIAL CURB & GUTTER DETAIL

FED. ROAD DIST. NO.	STATE	FED. AID PROJ. NO.	FISCAL YEAR	SHEET NO.	TOTAL SHEETS
HAWAII	HAW.	I-H1-1(31) Unit 1	1967	32	102

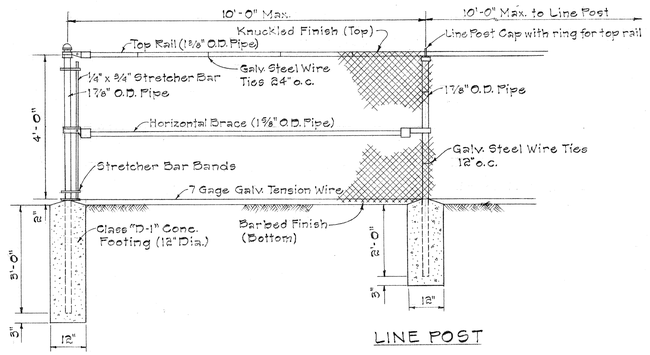

END POST

LINE POST

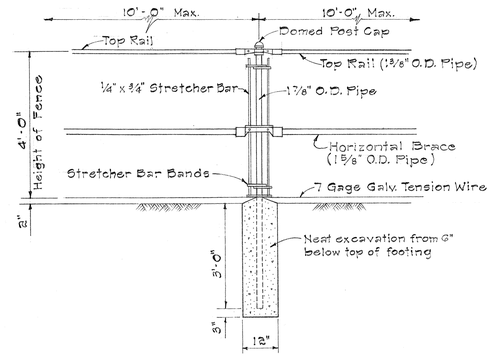

PULL POST

CHAIN LINK FENCE DETAIL

Scale: 1/2" = 1'-0"

CHAIN LINK FENCE QUANTITIES

LOCATION			Item 88.06 6-Ft. Chain Link Fence on Conc. Footing Lin. Ft.	Item 88.16 6-Ft. Chain Link Fence on Retaining Wall Lin. Ft.	Item 88.36 Reconstructed 6-Ft. Chain Link Fence on Ret. Wall Lin. Ft.	Item 88.14 4-Ft. Chain Link Fence on Ret. Wall Lin. Ft.	Item 88.24 4-Ft. Chain Link Fence on CRM Wall Lin. Ft.
ROAD	STA. TO STA.	SIDE					
Freeway (Westbound)	167+30 to 181+40	Left	1,028				
Freeway (Eastbound)	165+75 to 170+25	Right		450			
Freeway (Eastbound)	170+25 to 178+00	Right	811				
Freeway (Eastbound)	179+00 to 182+50	Right	188	75			
Freeway (Eastbound)	184+00 to 188+75	Right	510				
Freeway (Eastbound)	188+75 to 191+25	Right		248			
Freeway (Eastbound)	192+25 to 194+00	Right		202			
Freeway (Eastbound)	194+00 to 195+90	Right	188				
Freeway (Eastbound)	195+90 to 198+80	Right	297				
Freeway (Eastbound)	198+80 to 202+90	Right		442			
Freeway (Eastbound)	179+00 to 182+25	Right					385
Vineyard (Westbound)	151+90 to 157+90	Left	604				
Vineyard (Eastbound)	153+10 to Lu 3+80				265		
Vineyard (Eastbound)	155+00 to 158+90	Right	400				
Ward Ave.	6+30 to 7+45	Right				108	

CURB AND CURB & GUTTER QUANTITIES

LOCATION			LINEAL FEET											
ROAD	STA. TO STA.	SIDE	Reconstructed Lava Rock Curb	A.C. Roll	Precast Conc. Curb	Type "A" Curb	Type "A" Gutter	Type "AG" Curb & Gutter	Type "AGM" Curb & Gutter	Type "E" Curb	Type "DG" Curb & Gutter	Type "G" Gutter		
Freeway (Westbound)	164+88 to 169+00	Median						412						
Freeway (Westbound)	169+00 to 199+00	Median		10					3,000					
Freeway (Westbound)	164+45 to 165+25	Left				88								
Freeway (Westbound)	166+27 to 187+45	Left									2,118			
Freeway (Westbound)	187+64 to 187+75	Left				14								
Freeway (Westbound)	187+65 to 199+00	Left									1,114			
Freeway (Eastbound)	164+95 to 177+20	Median							1,225					
Freeway (Eastbound)	177+20 to 190+40	Median						1,320						
Freeway (Eastbound)	190+58 to 199+00	Median							842					
Freeway (Eastbound)	171+30 to 174+80	Right									350			
Freeway (Eastbound)	183+90 to 188+37	Right							470					
Freeway (Eastbound)	190+00 to 195+25	Right									526			
Ramp "H"	165+25 to 171+30	Right									605			
Ramp B-1	B-1 Sta. 0+35 to B-1 Sta. 4+96.04	Right									496			
Ramp B-1	B-1 Sta. 4+96 to B-1 Sta. 7+30	Lt. & Rt.						235		235				
Ramp "C"	P.C. Curb Return ℄ Ward 6+22.94 to ℄ 198+80	Lt. & Rt.									850			
Ramp "E"	199+00 to 202+70	Left									370			
Vineyard (Westbound)	Vin. 151+75 to Vin. 159+30	Median				755								
Vineyard (Westbound)	Vin. 163+92 to Vin. 168+10	Rt. E.P.				418								
Vineyard (Westbound)	Vin. 151+90 to Vin. 159+31	Lt. E.P.									766			
Vineyard (Westbound)	Vin. 163+92 to Vin. 168+00	Lt. E.P.									408			
Vineyard (Eastbound)	Vin. 152+55 to Vin. 160+13	Median				758								
Vineyard (Eastbound)	Vin. 162+50 to Vin. 169+09	Lt. E.P.						650						
Vineyard (Eastbound)	Vin. 162+50 to Vin. 163+10	Rt. E.P.									60			
Vineyard (Eastbound)	Vin. 154+50 to Vin. 160+13	Rt. E.P.									563			
Frontage Road "J"	"J" 3+67 to "J" 5+15	Right	149											
Frontage Road "J"	"J" 8+07 to "J" 8+57	Right	50											
Frontage Road "J"	"J" 10+50± to "J" 11+00	Right	35											
Frontage Road "J"	"J" 11+75	Right	50											
Frontage Road "J"	"J" 12+80	Right	30											
Frontage Road "J"	"J" 14+50	Right	50											
Frontage Road "J"	"J" 19+00 to 27+00	Right	800				612							
Frontage Road "J"	"J" 19+00 to 21+50	Left	281											
Frontage Road "J"	"J" 21+37 to 21+75	Left										38		
Frontage Road "J"	"J" 24+11 to 25+81	Left			172		142							
Frontage Road "J"	"J" 25+65 to 26+37	Left										73		
Frontage Road "J"	"J" 27+00 to 29+85	Right	267				237							
Frontage Road "J"	"J" 27+20	Left	12											
Frontage Road "J"	"J" 30+55 to 41+12	Right	1,065											
Frontage Road "K"	"K" 0+00 to 6+68	Left			658		658							
Frontage Road "K"	"K" 0+00 to 0+75	Right			124									
Frontage Road "K"	"K" 0+75 to 6+70	Right			595		595							
Pele St.	Cul-De-Sacs		187											
Miller St.	" " "		194											
Frear St.	" " "		192											
Lauhala St.	" " "		135											
Alapai St.	" " "		78											
Victoria St.	" " "		102											
Capt. Cook Ave.	" " "		360											
Ward Ave.	Ward 6+20 to 8+40	Left			231		231							
Ward Ave.	Ward 6+45 to 8+00	Right			156		156							
Lusitana	Vin. 153+25 to Lu 5+75.59		741	141			317				142			

NOTE:
All the quantities shown are original theoretical quantities. For actual quantities, refer to project ledger and/or computation book.

STATE OF HAWAII
DEPARTMENT OF TRANSPORTATION
HIGHWAYS DIVISION

4'-0" CHAIN LINK FENCE AND ESTIMATED QUANTITIES OF CHAIN LINK FENCE, CURBS, AND CURBS & GUTTERS

INTERSTATE ROUTE H-1
(LUNALILO FREEWAY)
Pele Street to Victoria Street
F.A.I. Proj. No. I-H1-1(31), Unit 1

Scale: 1/2" = 1'-0" Date: May, 1966

SHEET No. 2 OF 10 SHEETS

32

ORIGINAL PLAN	SURVEY PLOTTED BY	DATE
	DRAWN BY	"
	TRACED BY	"
NOTE BOOK	DESIGNED BY	"
	QUANTITIES BY	"
No.	CHECKED BY	"

PRINTED ON NO. 1000H CLEARPRINT

FED. ROAD DIST. NO.	STATE	FED. AID PROJ. NO.	FISCAL YEAR	SHEET NO.	TOTAL SHEETS
HAWAII	HAW.	I-H1-1(31) Unit 1	1967	33	292

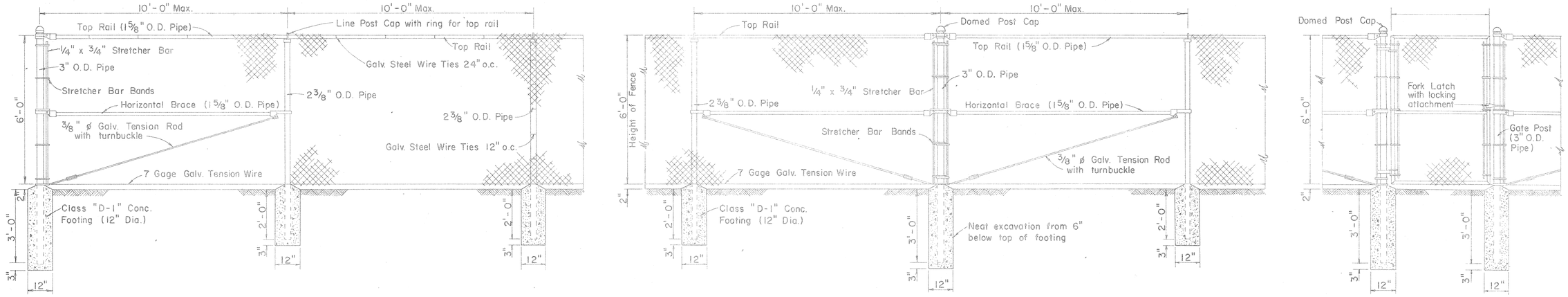

END POST | LINE POST | LINE POST | LINE POST | PULL POST | LINE POST | GATE POST | GATE POST

CHAIN LINK FENCE DETAIL

Scale: 1/2" = 1'-0"

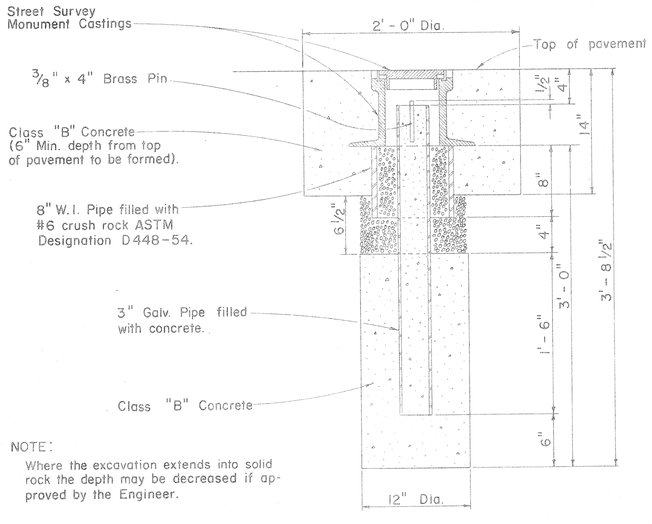

NOTE:
Where the excavation extends into solid rock the depth may be decreased if approved by the Engineer.

STREET SURVEY MONUMENT

Scale: 1/2" = 1'-0"

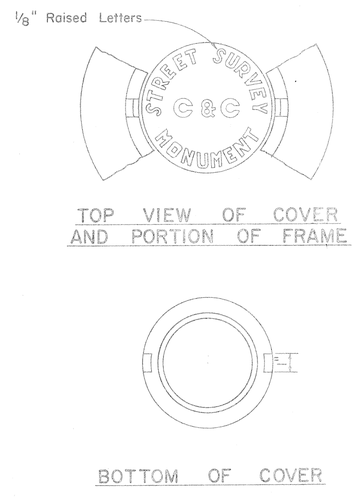

TOP VIEW OF COVER AND PORTION OF FRAME

BOTTOM OF COVER

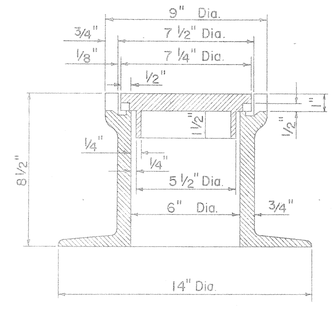

SECTIONAL VIEW OF FRAME AND COVER

STREET SURVEY MONUMENT CASTINGS

Scale: 3" = 1'-0"

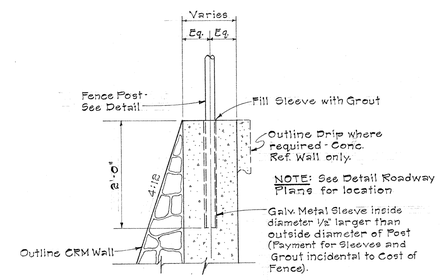

TYPICAL SECTION OF FENCE POST ON CRM & CONC. RETAINING WALL

Scale: 3/4" = 1'-0"

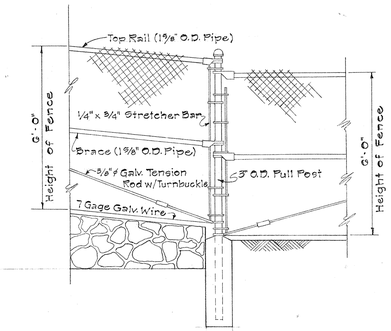

TYPICAL FENCE CONNECTION DETAIL AT RETAINING WALL

Scale: 3/8" = 1'-0"

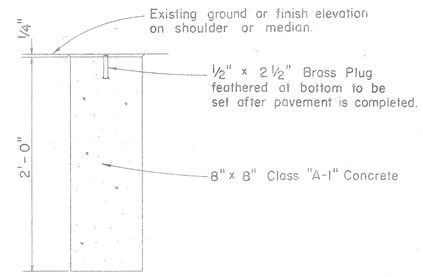

DETAIL FOR ℄ AND REFERENCE SURVEY MONUMENT

Scale: 1/2" = 1'-0"

ORIGINAL PLAN	SURVEY PLOTTED BY	DATE
	DRAWN BY	" "
	TRACED BY	" "
NOTE BOOK	DESIGNED BY	" "
	QUANTITIES BY	" "
No.	CHECKED BY	" "

STATE OF HAWAII
DEPARTMENT OF TRANSPORTATION

CHAIN LINK FENCE AND MONUMENT DETAILS

INTERSTATE ROUTE H-1
(LUNALILO FREEWAY)
Pele Street to Victoria Street
FAI. Proj. No. I-H1-1(31), Unit 1

Scale: As Shown Date: April, 1966

SHEET No. 3 OF 10 SHEETS

33 33

FED. ROAD DIST. NO.	STATE	FED. AID PROJ. NO.	FISCAL YEAR	SHEET NO.	TOTAL SHEETS
HAWAII	HAW.	I-HI-1(31) Unit 1	1967	34	202

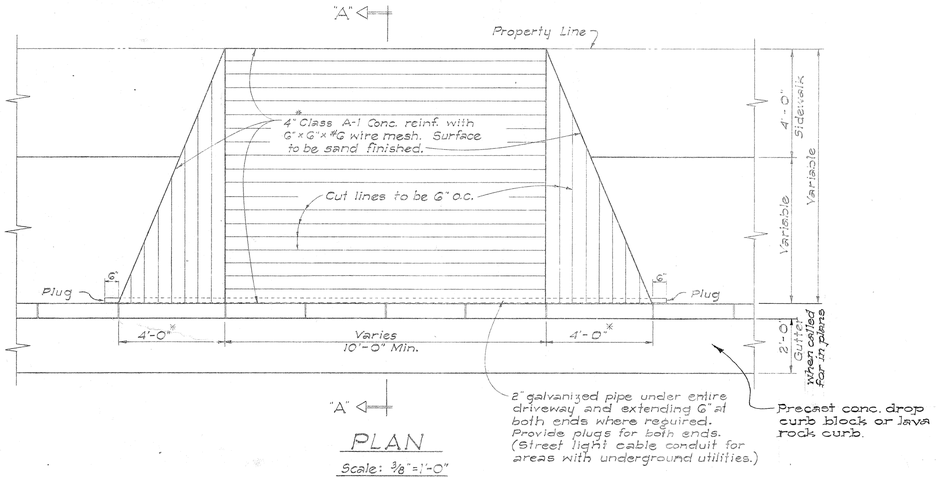

PLAN

Scale: 3/8"=1'-0"

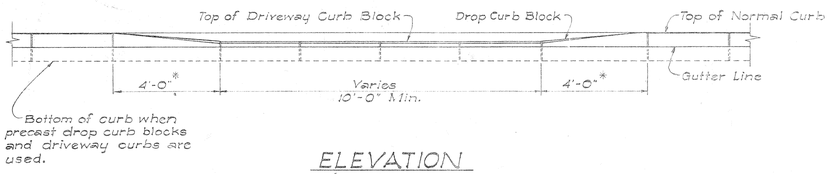

ELEVATION

Scale: 3/8" = 1'-0"

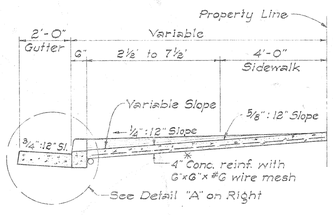

SECTION "A-A"

Scale: 3/8" = 1'-0"

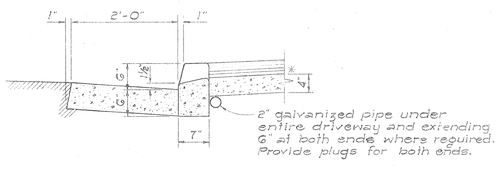

DETAIL "A"

Scale: 3/4" = 1'-0"

CONSTRUCTION DETAILS FOR DROP DRIVEWAY

*Use dimension shown unless otherwise noted on the plans.

LIST OF DRIVEWAYS

LOCATION			CONC. DROPPED DRIVEWAY		DRIVEWAY IN PRIVATE PROPERTY			
					PCC CONC.		ASPHALT CONC.	
STREET	STATION	LOT TAX KEY NO.	WIDTH (Ft.)	AREA (Sq. Ft.)	WIDTH (Ft.)	AREA (Sq. Ft.)	WIDTH (Ft.)	AREA (Sq. Ft.)
Miller St.	11+07 (Right)	2-1-21:12	12	98	Conform at Right-of-Way			
Miller St.	11+17 (Left)	2-1-37:29	20	180	Conform at Right-of-Way			
Frear St.	6+28 (Right)	2-1-37:55	10	90	Conform at Right-of-Way			
~~Alapai St.~~		~~2-1-37:12~~	~~12~~	~~96~~	~~Conform at Right-of-Way~~			
Front Rd. "K"	0+50 (Right)	2-1-40:31	12	156	Conform at Right-of-Way			
Front Rd. "K"	2+26 (Right)		20	160	Conform at Right-of-Way			
Front Rd. "K"	5+36 (Right)	2-1-40:11	20	160	Conform at Sidewalk			
Ward St.	3+46 (Left)	2-4-14:19	20	120**				155
Ward St.	7+49 (Right)	2-1-40:1	12	96	12	36		
Ward St.	7+84 (Left)	2-4-14:24	15	120	12	192		
Lusitana St.	3+90 (Right)	2-1-35:3	15	120**			12	336
Lusitana St.	4+26 (Right)	2-1-35:3	20	180**			20	600
Front Rd. "K"	2+33 (Right)	(State Owned)	20	150	Conform at Right-of-Way			

** Denotes 6" thick P.C.C. dropped driveway.

NOTES:

1. All measurements shown on this sheet are estimated only.
2. Private A.C. driveways shall have the following pavement section:
   Wearing Surface: 2" Asphalt Concrete Mix V
   Base Course: 6" Untreated Base
   Sub-base Course: None
3. Dropped driveways in Business Zone shall be 6" thick.

NOTE:
All the quantities shown are original theoretical quantities. For actual quantities, refer to project ledger and/or computation book.

ORIGINAL PLAN	SURVEY PLOTTED BY	DATE
	DRAWN BY	"
	TRACED BY	"
	DESIGNED BY	"
NOTE BOOK	QUANTITIES BY	"
No.	CHECKED BY	"

STATE OF HAWAII
DEPARTMENT OF TRANSPORTATION
HIGHWAYS DIVISION

DETAILS FOR DRIVEWAYS

INTERSTATE ROUTE H-1
(LUNALILO FREEWAY)
Pele Street to Victoria Street
F.A.I. Proj. No. I-HI-1(31), Unit 1

Scale: As shown Date: April, 1966

SHEET No. 4 OF 10 SHEETS

FED. ROAD DIST. NO.	STATE	FED. AID PROJ. NO.	FISCAL YEAR	SHEET NO.	TOTAL SHEETS
HAWAII	HAW.	I-HI-1(31) UNIT 1	1969	C034 S-1	202

Revised : 8-7-69

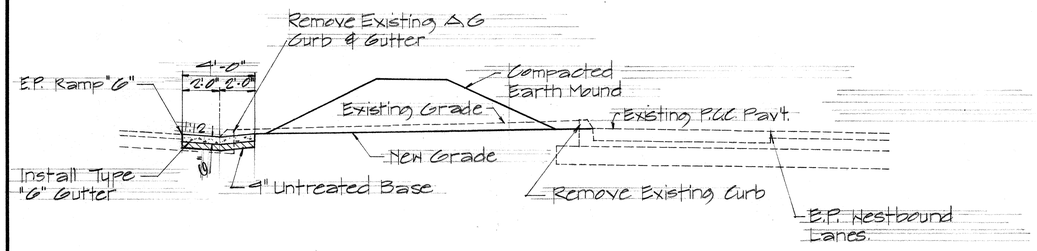

SECTION "D"-"D"
Scale: 1/4"=1'-0"

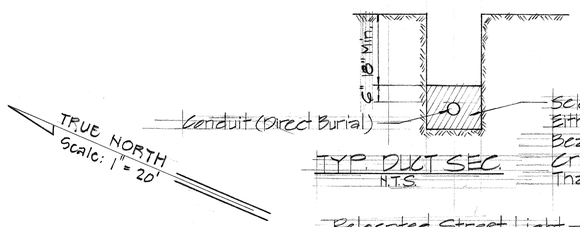

TYP. DUCT SEC.
N.T.S.

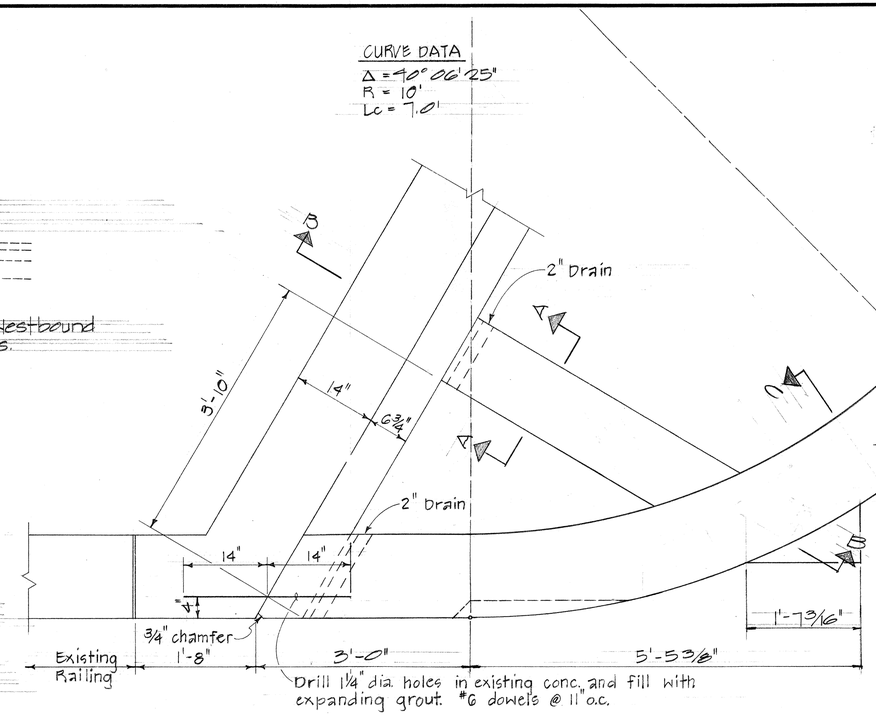

PLAN
Scale: 1" = 1'-0"

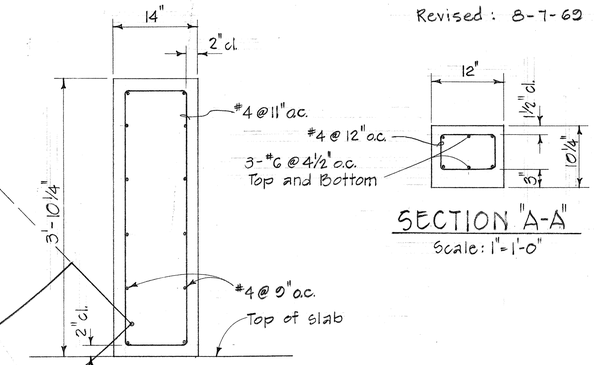

SECTION "C-C"
Scale: 1" = 1'-0"

SECTION "A-A"
Scale: 1" = 1'-0"

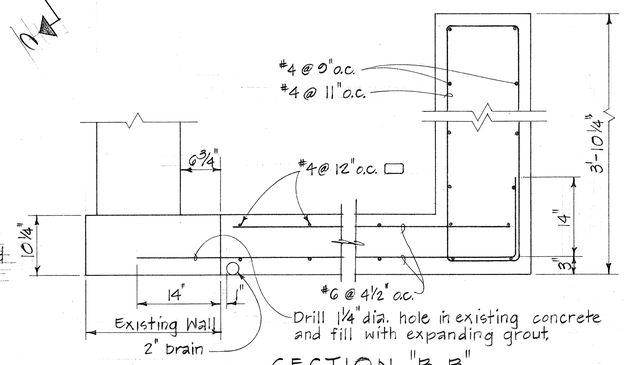

SECTION "B-B"
Scale: 1" = 1'-0"

NOTE:
For Detail of Standard End Post Connection to Metal Guard Rail See Sheet C034 S-5.

GENERAL NOTE
The Contractor shall verify dimensions and locations of existing equipment and facilities.

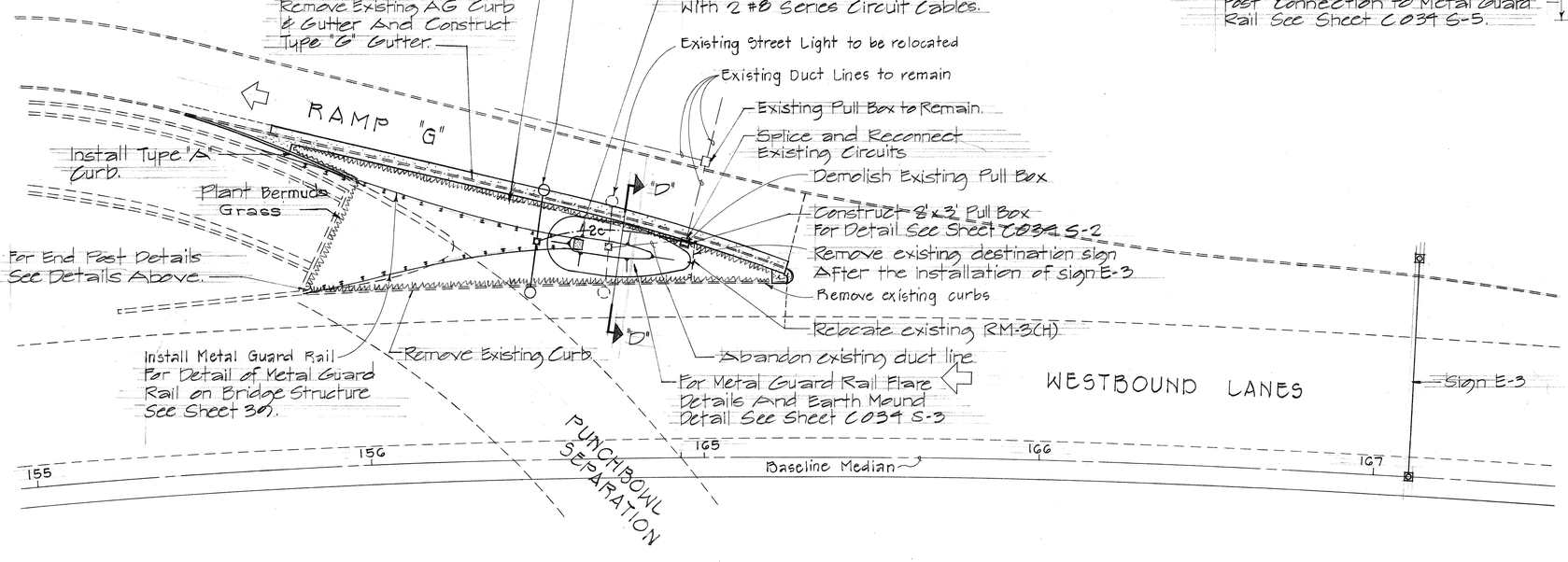

PLAN
Sc. 1" = 20'-0"

THIS SHEET IS A SUPPLEMENT TO THE CONTRACT PLANS.

STATE OF HAWAII
DEPARTMENT OF TRANSPORTATION
HIGHWAYS DIVISION

DETAIL PLAN ROADWAY AND END POST DETAILS

INTERSTATE ROUTE H-1
Pele Street to Victoria Street
F.A.I. Proj. No. I-HI-1(31), Unit 1

Scale: As Shown Date: Jan. 1969

SHEET No. OF SHEETS

C034 S-1

ORIGINAL PLAN	SURVEY PLOTTED BY	DATE
	DRAWN BY	
	TRACED BY	
NOTE BOOK	DESIGNED BY	
	QUANTITIES BY	
No.	CHECKED BY	

PRINTED ON NO. 1000H CLEARPRINT

FED. ROAD DIST. NO.	STATE	FED. AID PROJ. NO.	FISCAL YEAR	SHEET NO.	TOTAL SHEETS
HAWAII	HAW.	I-HI-1(31) UNIT 1	1967	C0 34 S2	202

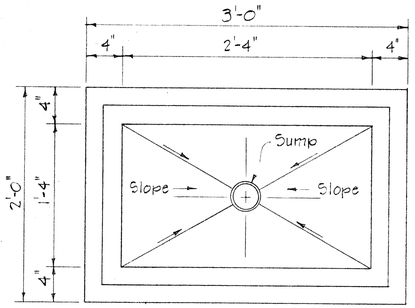

PLAN
Scale: 1½" = 1'-0"

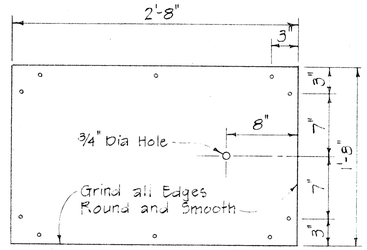

3/8" CHECKED PLATE COVER.
(Hot Dip Galvanizing Checkered Plate after Drilling, Countersinking and Grinding Edge)
Scale: 1½" = 1'-0"

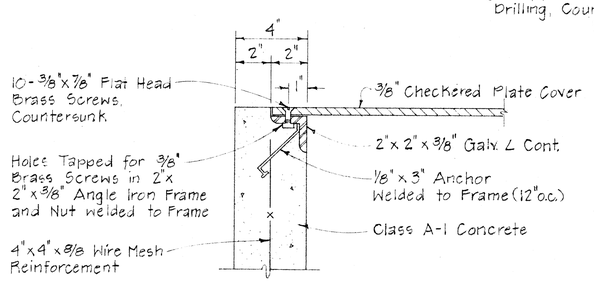

DETAIL "A"
Scale: 3" = 1'-0"

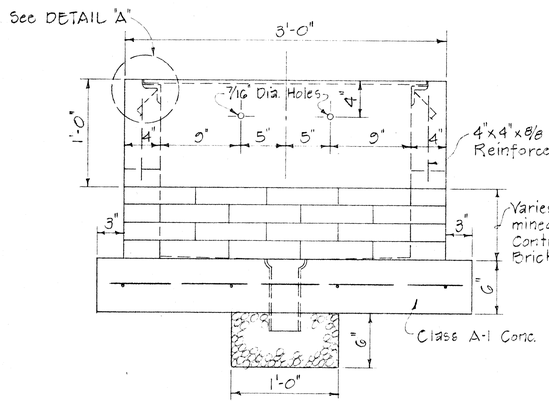

SIDE VIEW
Scale: 1½" = 1'-0"

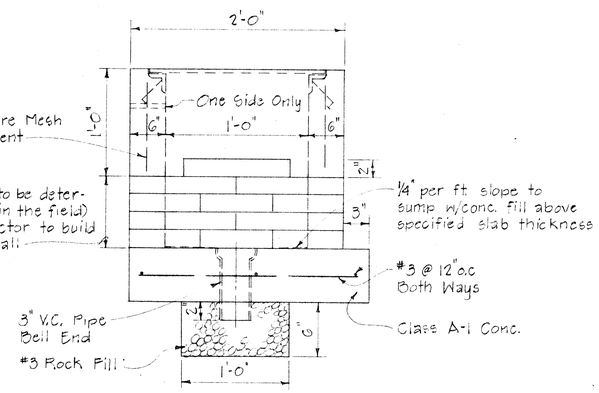

END VIEW
Scale: 1½" = 1'-0"

2'-0" x 3'-0" CONCRETE PULLBOX

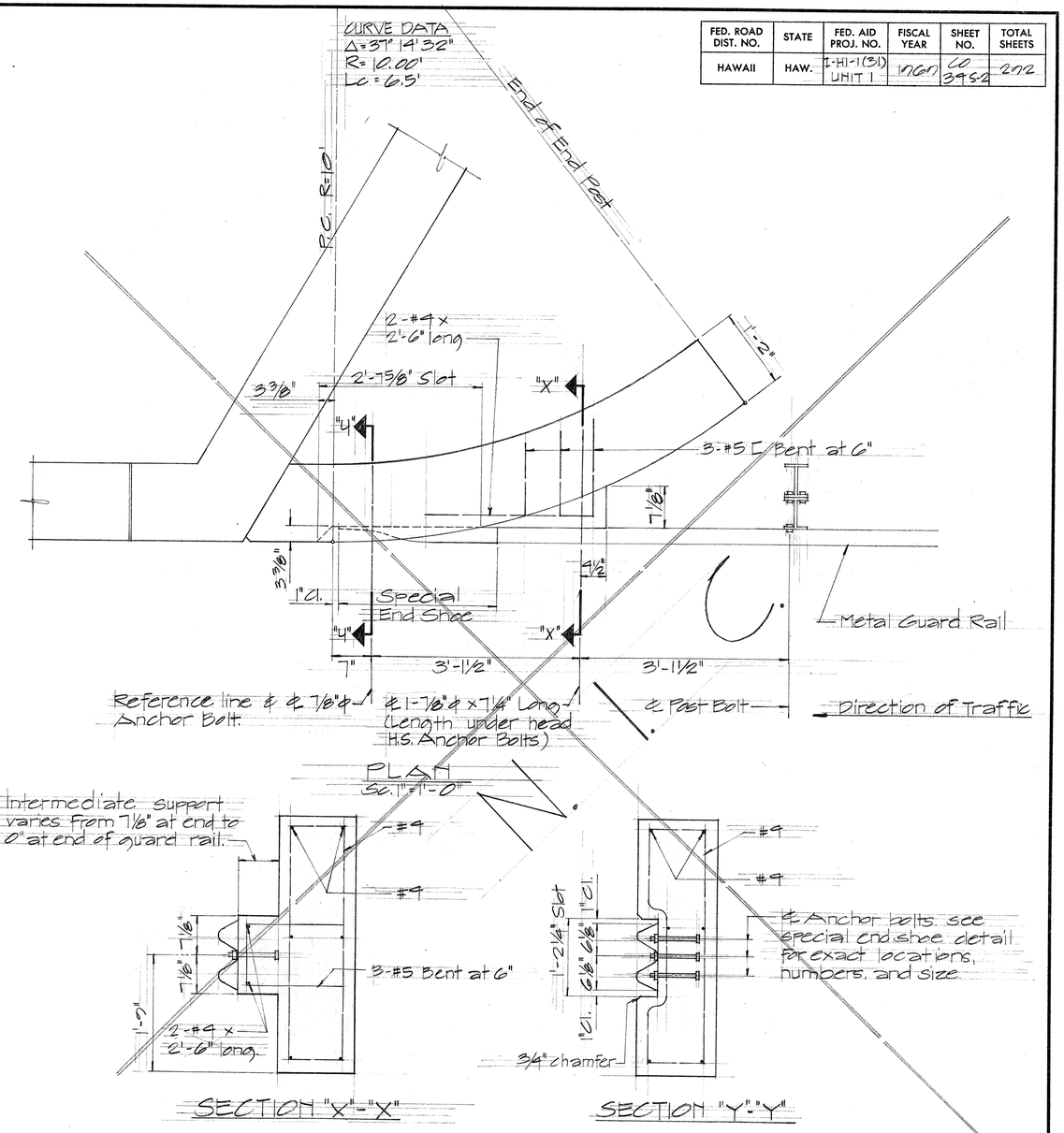

DETAIL OF END POST CONNECTION TO METAL GUARD RAIL
Sc. 1" = 1'-0"

NOTES:

1. Concrete Pullbox shall consist of all work necessary for constructing the Pullbox for the Highway Lighting in the median and shall include furnishing & installing all materials, appurtenances and galvanizing as shown above.
2. A mounting bracket or a 10" x 10" x 6" high (minimum) shelf shall be provided in each Pullbox for the installation of an isolating transformer (Incidental to Concrete Pullbox)

THIS SHEET IS A SUPPLEMENT TO THE CONTRACT PLANS.

STATE OF HAWAII
DEPARTMENT OF TRANSPORTATION
HIGHWAYS DIVISION

2'x3' CONCRETE PULL BOX

INTERSTATE ROUTE H-1
PELE STREET TO VICTORIA STREET
F.A.I. PROJECT NO. I-HI-1(31) U-1
Scale as shown Date: Jan. 1967

SHEET No. OF SHEETS

C0 34 S-2

ORIGINAL PLAN	SURVEY PLOTTED BY	DATE
	DRAWN BY	"
	TRACED BY	"
NOTE BOOK	DESIGNED BY	"
	COMPUTED BY	"
No.	CHECKED BY	"

PRINTED ON NO. 1000H CLEARPRINT

FED. ROAD DIST. NO.	STATE	FED. AID PROJ. NO.	FISCAL YEAR	SHEET NO.	TOTAL SHEETS
HAWAII	HAW.	F-HI-1(31) UHIT 1	1969	60 345-3	202

REVISED: 12-11-68

NOTE:

Two Way Roadway:
Approach End - 15:1 Flare and End Anchor
Trailing End - 10:1 Flare and End Anchor

One Way Roadway (Divided Highway)
Approach End - 15:1 Flare and End Anchor
Trailing End - Flare not required.
Extend Guard Rail 50 ft. beyond the point of theoretical need.
Where such extension is not feasible, extend guard rail at least 25 ft. beyond the limits of the theoretical need and anchor the end.

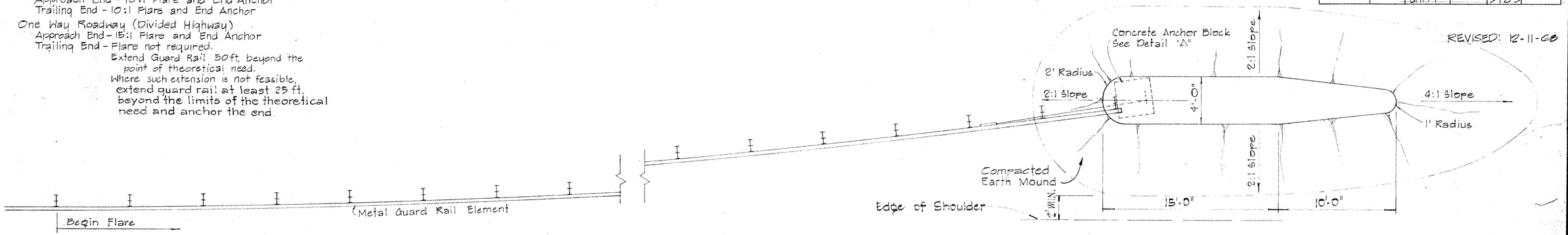

FLARE FOR FLAT, FILL OR CUT SECTIONS

Scale: 1/4" = 1'-0"

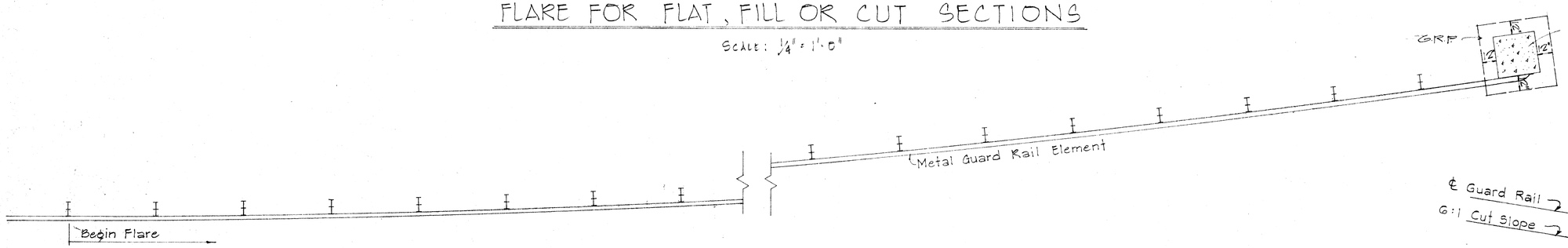

FLARE FOR CUT SECTION

Scale: 1/4" = 1'-0"

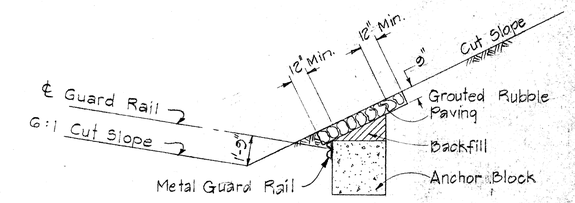

DETAIL "B"

Not to Scale

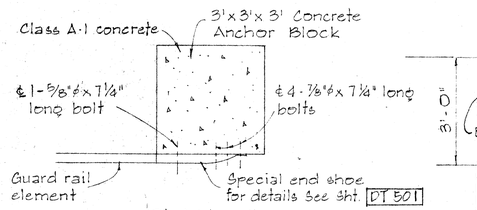

PLAN

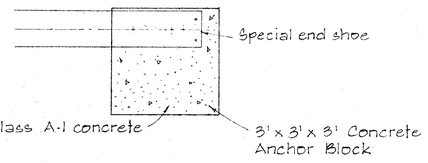

ELEVATION

ANCHOR BLOCK DETAIL

Scale: 1/2" = 1'-0"

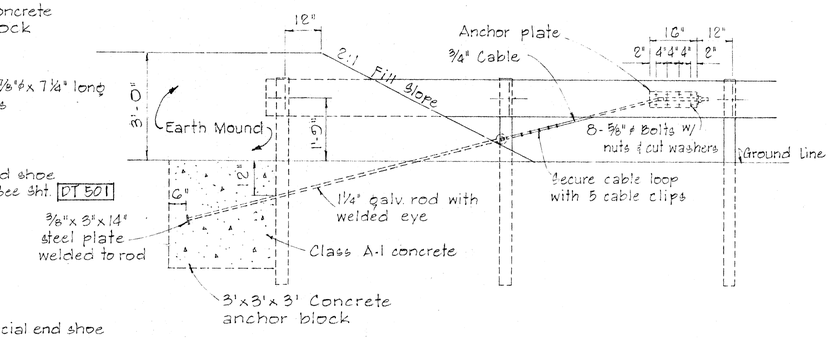

DETAIL "A"

Scale: 1/2" = 1'-0"

NOTE:

1. Galvanized Anchor Rod, Metal Guard Rail and Post buried in ground shall be covered with coat of coal tar enamel

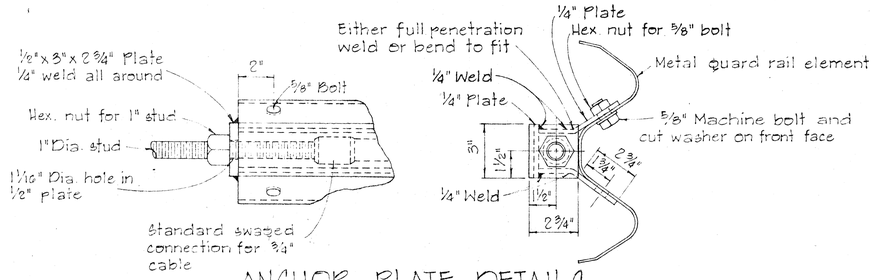

ANCHOR PLATE DETAILS

Scale: 1" = 3"

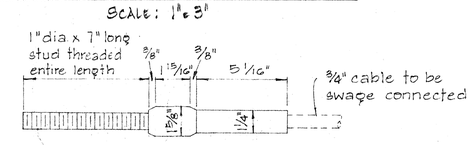

STANDARD SWAGED FITTING AND STUD

Scale: 1" = 3"

THIS SHEET IS A SUPPLEMENT OF THE CONTRACT PLANS.

STATE OF HAWAII
DEPARTMENT OF TRANSPORTATION
HIGHWAYS DIVISION

METAL GUARD RAIL FLARE DETAIL

Scale: As Shown

Nov. 1968

SHEET No. OF SHEETS DT 503

C O 3 4 S - 3

ORIGINAL PLAN	DATE
SURVEY PLOTTED BY	
DRAWN BY	
TRACED BY	
DESIGNED BY	
NOTE BOOK	QUANTITIES BY
No.	CHECKED BY

PRINTED ON NO. 1000H CLEARPRINT

FED. ROAD DIST. NO.	STATE	FED. AID PROJ. NO.	FISCAL YEAR	SHEET NO.	TOTAL SHEETS
HAWAII	HAW.	I-H1-1(31) UNIT 1	1969	60 345-4	2012

Revised: Dec. 11, 1968

BOLT DIMENSIONS		
TYPE A BOLT	D	L
Splice Bolt	5/16"	1 1/4"
Post Bolt for Conc. Post w/ Double Wood Blocks	3/32"	24"
Post Bolt for Conc. Post w/ Single Wood Block	3/32"	18"
Rail Bolt for Metal Block	3/32"	2"

BOLT DIMENSIONS	
TYPE B BOLT	L
Post Bolt for Conc. Post w/ Metal Blocks	9 1/2"
Post Bolt for Metal Post w/ Metal Block	1 3/4"

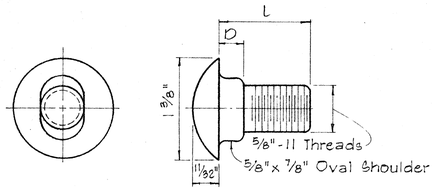

TYPE A BOLT

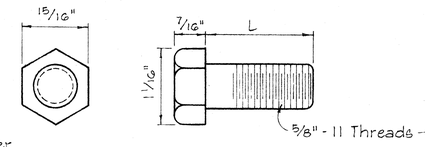

TYPE B BOLT

SPLICE RAIL AND POST BOLTS

Scale: Full Size

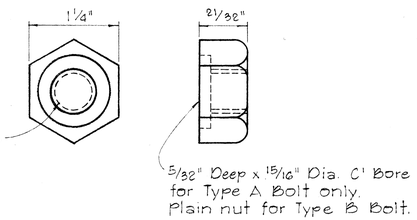

HEXAGON NUT

Scale: Full Size

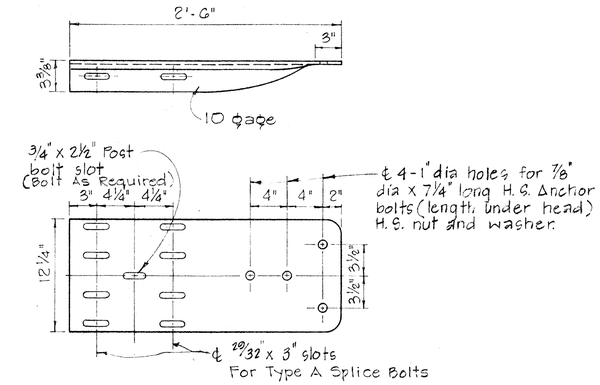

SPECIAL END SHOE

Scale: 1 1/2" = 1'-0"

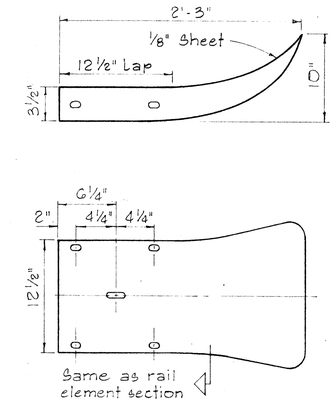

FLARED END

Scale: 1 1/2" = 1'-0"

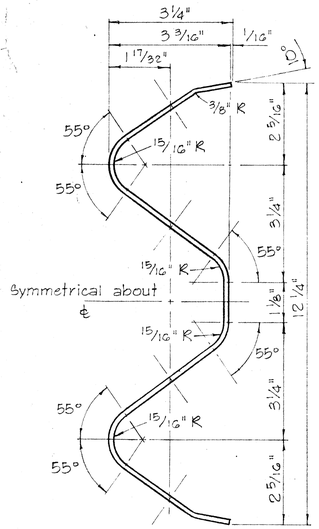

RAIL ELEMENT SECTION

Scale: 6" = 1'-0"

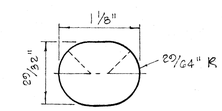

SPLICE BOLT SLOT

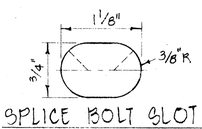

SPLICE BOLT SLOT FOR ALL ENDS

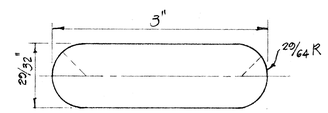

SPLICE BOLT SLOT FOR SPECIAL END SHOE

Scale: Full Size

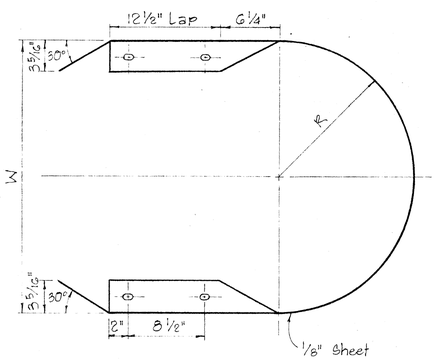

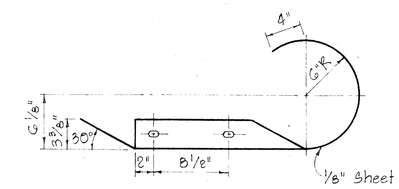

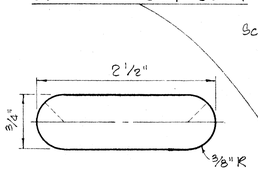

POST BOLT SLOT

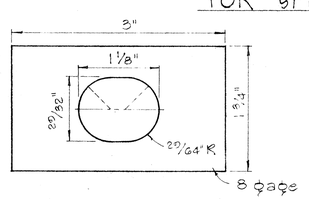

RAIL WASHER

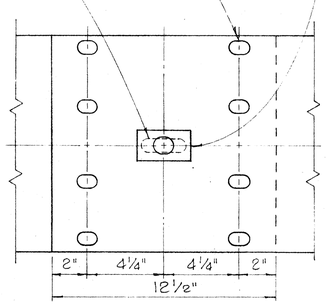

RAIL SPLICE

Scale: 3" = 1'-0"

NOTES:

1. H.S. Bolts shall conform to the requirements of ASTM A-325.
2. Special End Shoe shall be fabricated from 10 Gage steel conforming to the requirements of AASHO 180.

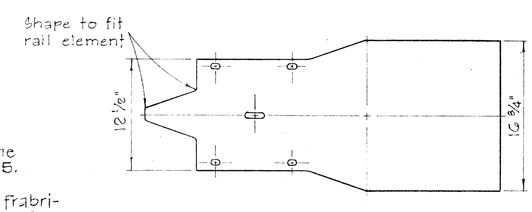

MEDIAN END

Scale: 1 1/2" = 1'-0"

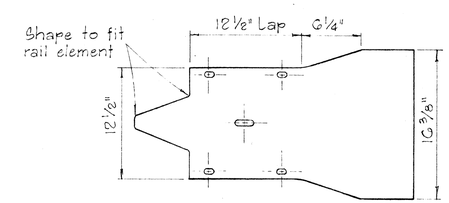

CURVED END

Scale: 1 1/2" = 1'-0"

MEDIAN END DIMENSIONS		
TYPE OF POST AND BLOCK	W	R
Double Metal Guard Rail on Concrete Post with Wood Blocks	20 3/4"	14 7/8"
Double Metal Guard Rail on Concrete Post with Metal Blocks (BJG)	26 1/2"	13 1/4"
Double Metal Guard Rail on Metal Post with Metal Blocks (BJG)	24 3/8"	12 3/16"

THIS SHEET IS A SUPPLEMENT TO THE CONTRACT PLANS.

STATE OF HAWAII
DEPARTMENT OF TRANSPORTATION
HIGHWAYS DIVISION

STANDARD DETAILS

METAL GUARD RAIL

Scale: As Noted — August, 1968

SHEET No. OF SHEETS DT 501

ORIGINAL PLAN	SURVEY PLOTTED BY	DATE
	DRAWN BY	
	TRACED BY	
NOTE BOOK	DESIGNED BY	
No.	QUANTITIES BY	
	CHECKED BY	

PRINTED ON NO. 1000H CLEARPRINT

60 345-4

FED. ROAD DIST. NO.	STATE	FED. AID PROJ. NO.	FISCAL YEAR	SHEET NO.	TOTAL SHEETS
HAWAII	HAW.	F-HI-1(31) UNIT 1	1969	CO 345-5	2072

CURVE DATA

Δ = 40°06' 25"
R = 10'
Lc = 7'

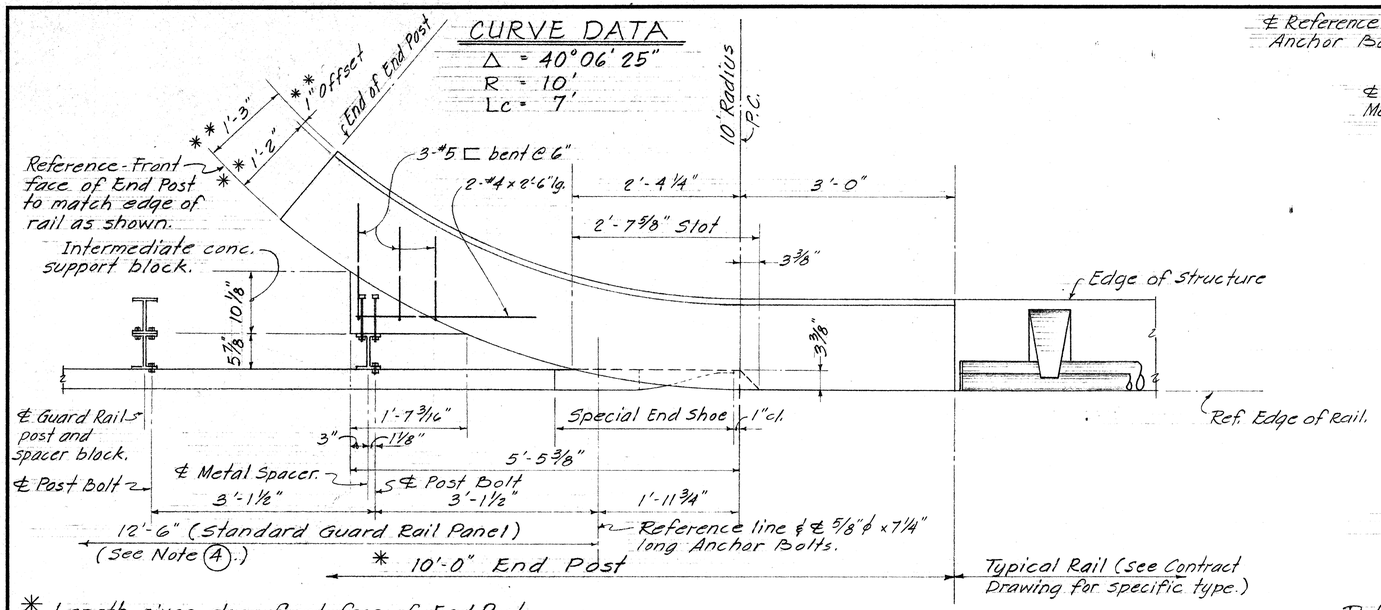

* Length given along front face of End Post.

PLAN Scale: 1" = 1'-0"

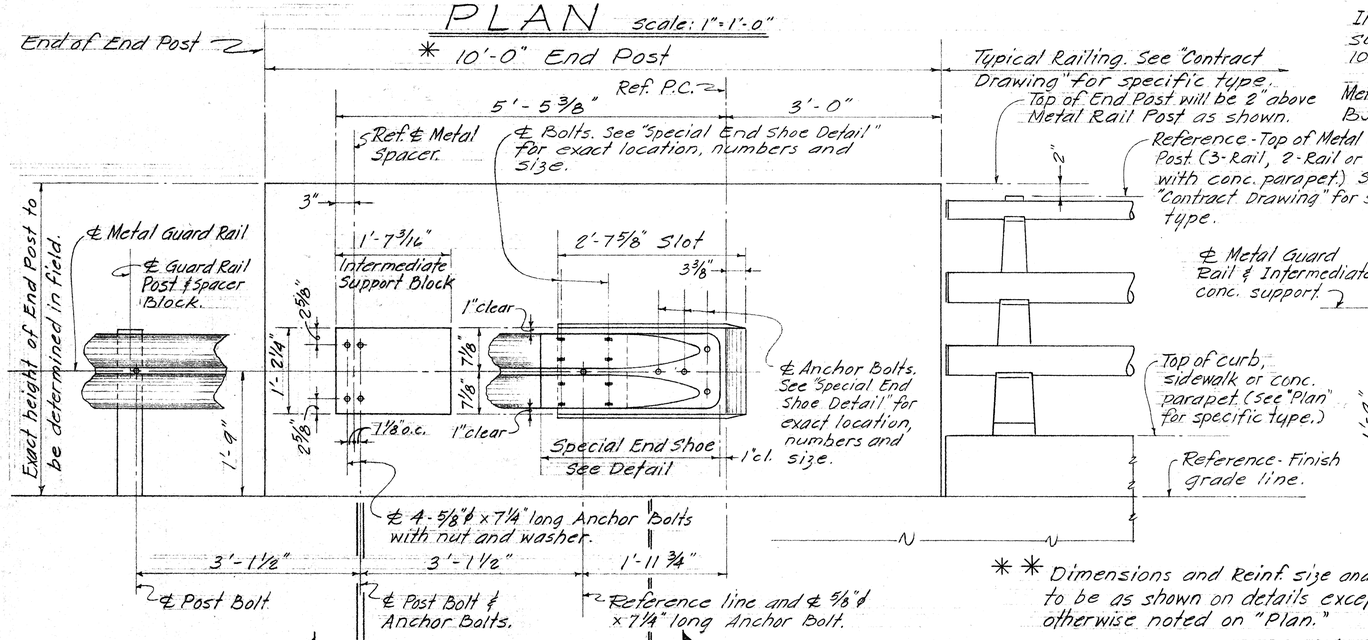

ELEVATION

Scale: 1" = 1'-0"

** Dimensions and Reinf. size and spacing to be as shown on details except otherwise noted on "Plan."

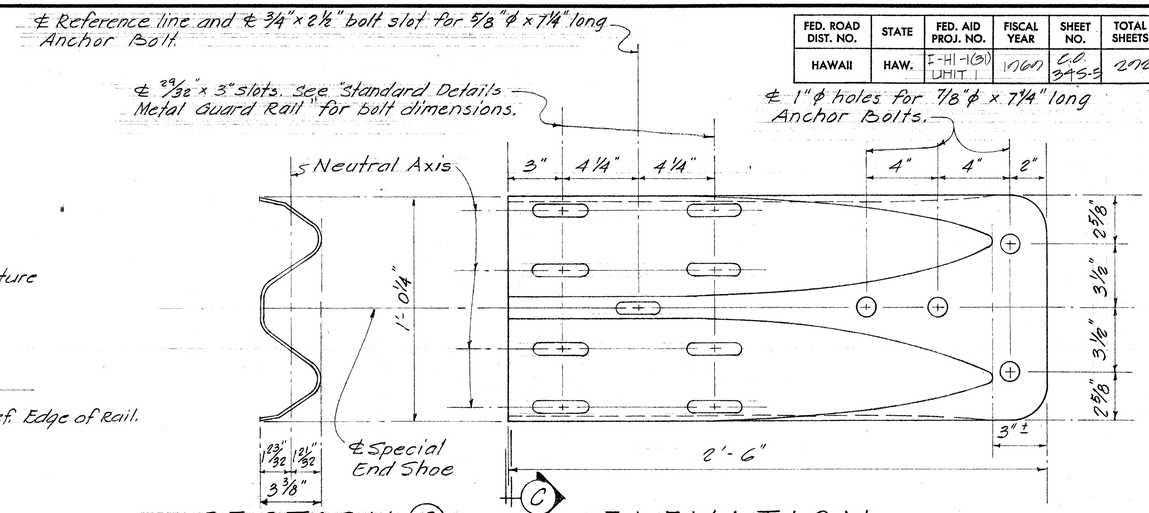

SECTION C — ELEVATION

SPECIAL END SHOE DETAILS

Scale: 3" = 1'-0"

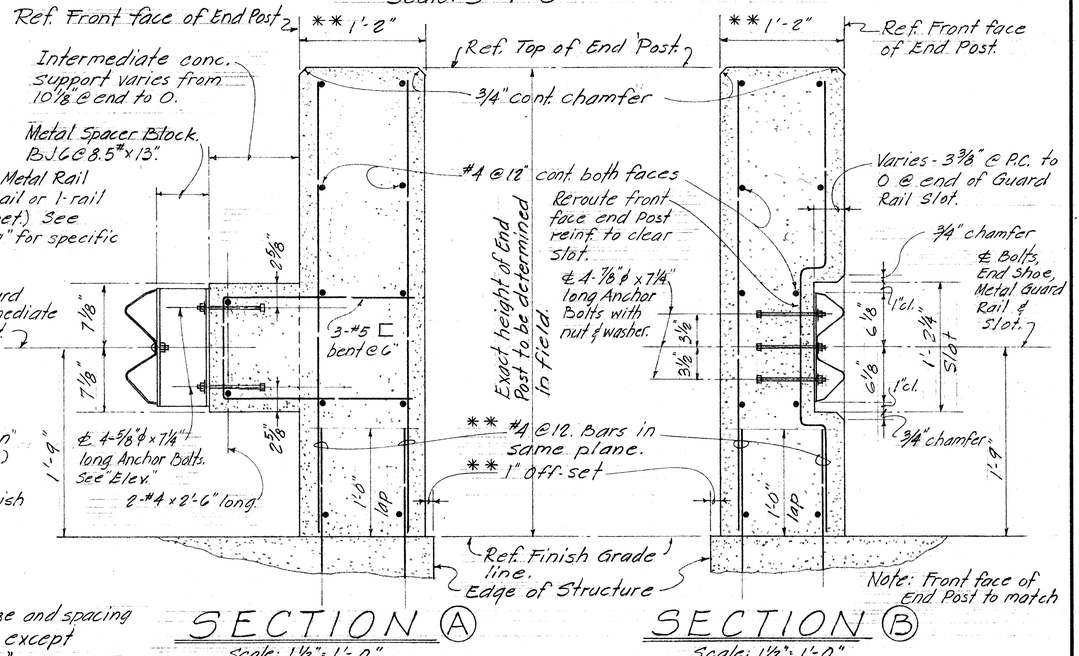

SECTION A

Scale: 1 1/2" = 1'-0"

SECTION B

Scale: 1 1/2" = 1'-0"

NOTES

1. All Anchor Bolts shall be High Strength bolts conforming to the requirements of ASTM A-325.
2. All Shoe assembly, including anchor bolts, nuts and washers, shall be galvanized.
3. Special End Shoe shall be fabricated from 10 gage steel conforming to the requirements of AASHO 180.
4. First Guard Rail Panel adjoining "Special End Shoe" shall be of galvanized steel. See Special Provisions for requirements.
5. Anchor Bolt length given under bolt head.
6. These details are applicable for connections to Retaining Walls also.

THIS SHEET IS A SUPPLEMENT TO THE CONTRACT PLANS.

STATE OF HAWAII
DEPARTMENT OF TRANSPORTATION
HIGHWAYS DIVISION

CONNECTION DETAIL OF METAL GUARD RAIL TO VERTICAL FACED END POST

SCALE AS SHOWN
DATE: MARCH, 1969

SHEET No. OF SHEETS

ORIGINAL PLAN	SURVEY PLOTTED BY	DATE
	DRAWN BY	
	TRACED BY	
NOTE BOOK	DESIGNED BY	
	QUANTITIES BY	
No.	CHECKED BY	

CO 34 S-5

K+E CRYSTALENE LA 2920 TRACING PAPER

FED. ROAD DIST. NO.	STATE	FED. AID PROJ. NO.	FISCAL YEAR	SHEET NO.	TOTAL SHEETS
HAWAII	HAW.	I-HI-1(31) UNIT 1	1969	CO34 S-6	202

Revised: 6-14-69

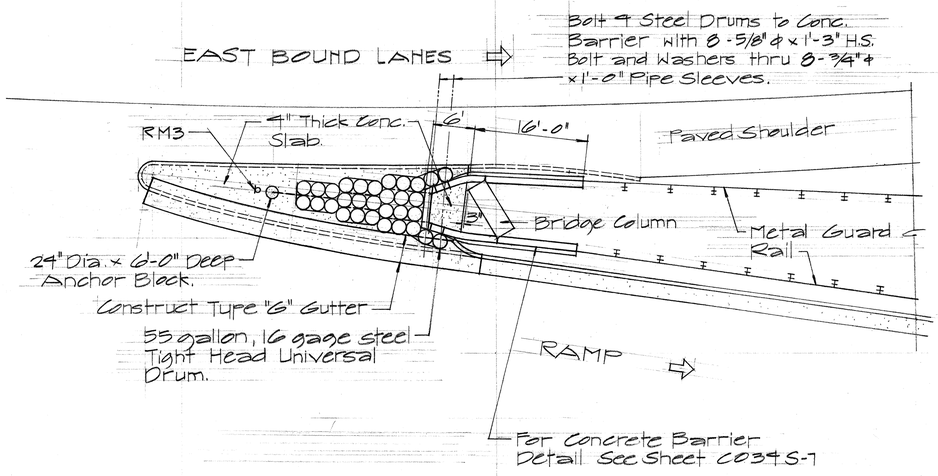

ENLARGED PLAN
Sc. 1" = 10'-0"

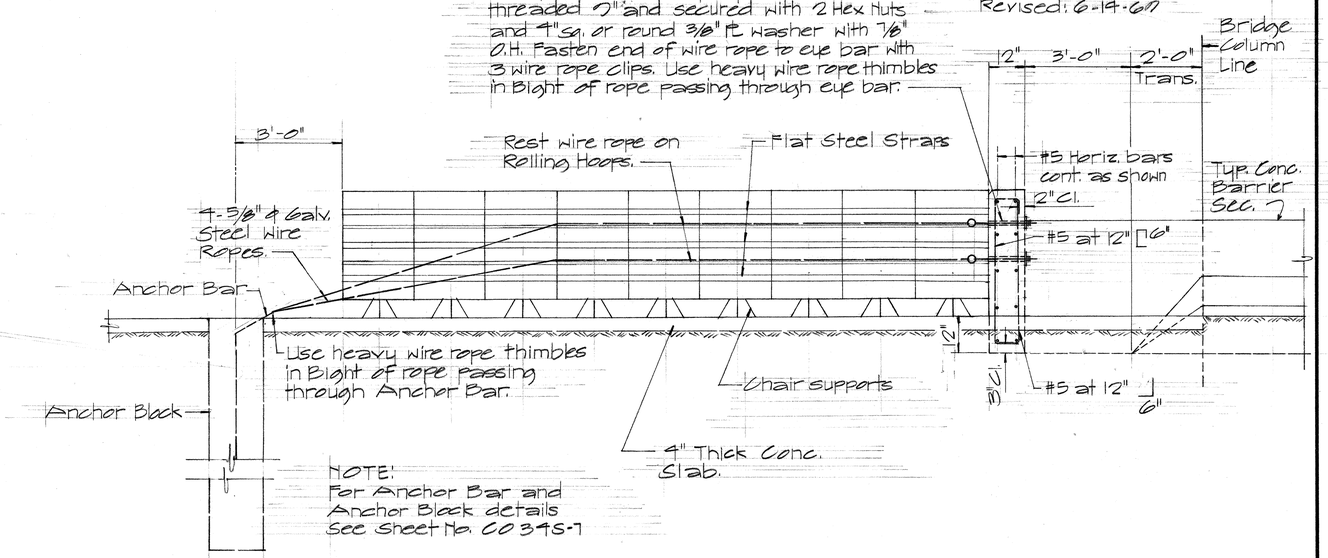

ELEVATION
Sc. 1/2" = 1'-0"

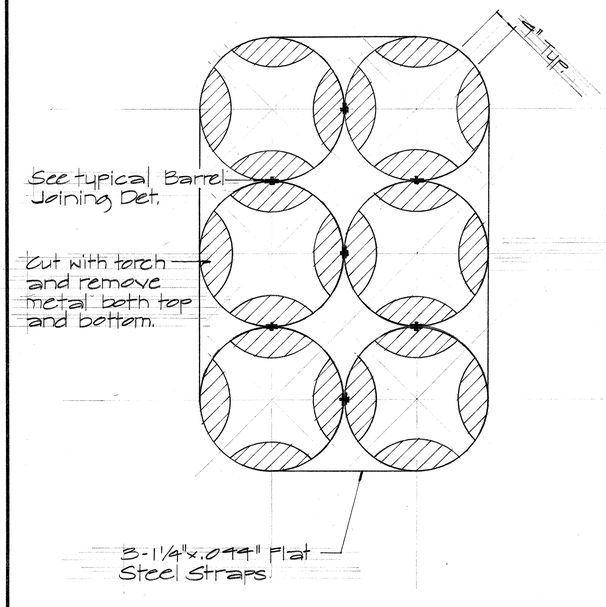

TYP. BARREL LAYOUT
Sc. 1" = 1'-0"

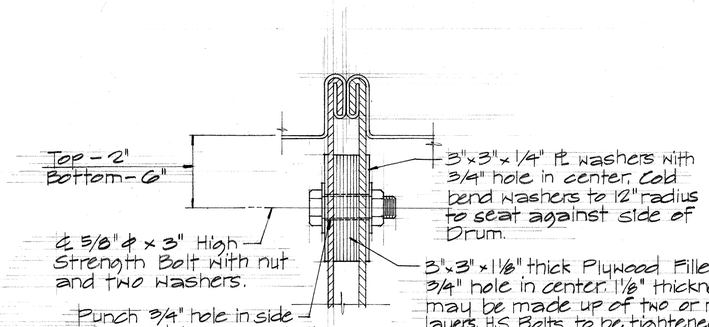

BOLTED JOINT (Bolt at Top & Bottom as shown)

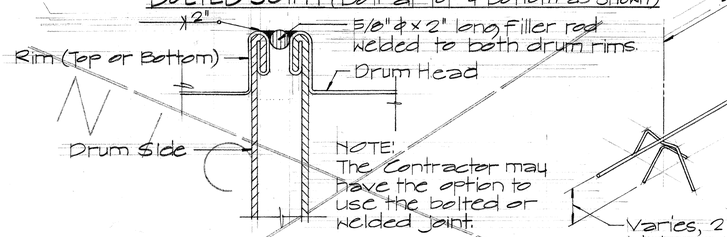

WELDED JOINT (Weld at Top & Bottom Rims as shown)

TYP. BARREL JOINING DETAILS
Not To Scale

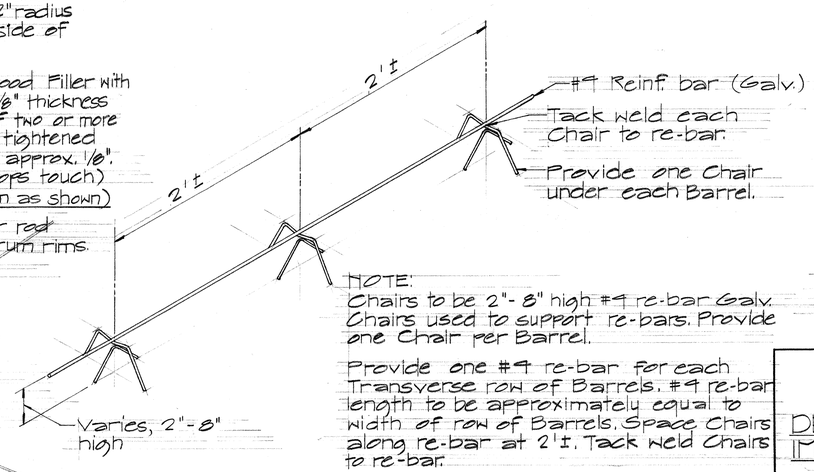

NOTE:
Chairs to be 2" - 8" high #4 re-bar Galv. Chairs used to support re-bars. Provide one Chair per Barrel.

Provide one #4 re-bar for each Transverse row of Barrels. #4 re-bar length to be approximately equal to width of row of Barrels. Space Chairs along re-bar at 2'±. Tack weld Chairs to re-bar.

TYP. DET. OF CHAIR SUPPORTS
Not To Scale

THIS SHEET IS A SUPPLEMENT TO THE CONTRACT PLANS

STATE OF HAWAII
DEPARTMENT OF TRANSPORTATION
HIGHWAYS DIVISION

DETAIL OF STEEL DRUM IMPACT ATTENUATOR

INTERSTATE ROUTE H-1 (LUNALILO FREEWAY)
PELE STREET TO VICTORIA STREET
F.A.I. PROJECT No. I-HI-1(31) UNIT 1

Sc. As Shown April 1969

SHEET No. OF SHEETS

CO 34 S-6

ORIGINAL PLAN		DATE
	SURVEY PLOTTED BY	
	DRAWN BY	
	TRACED BY	
	DESIGNED BY	
NOTE BOOK	QUANTITIES BY	
No.	CHECKED BY	

PRINTED ON NO. 1000H CLEARPRINT

FED. ROAD DIST. NO.	STATE	FED. AID PROJ. NO.	FISCAL YEAR	SHEET NO.	TOTAL SHEETS
HAWAII	HAW.	I-HI-1(31) UNIT 1	1960	CO 34 S-7	202

Revised: 6-14-60

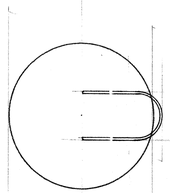

PLAN

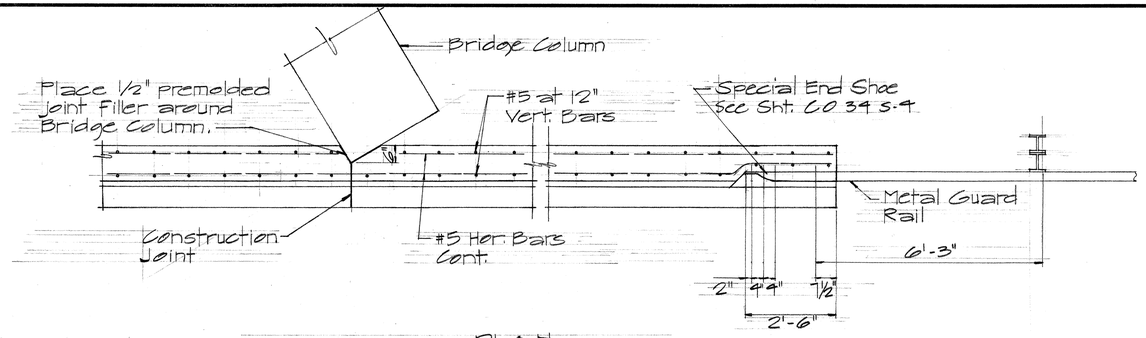

PLAN

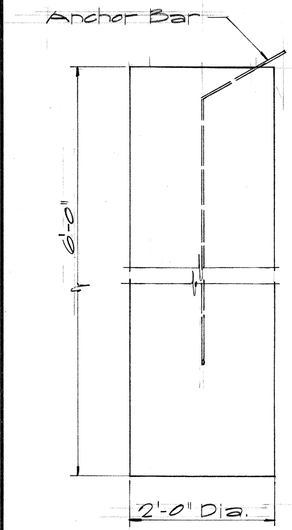

ELEVATION

ANCHOR BLOCK DET.
Sc. 1"=1'-0"

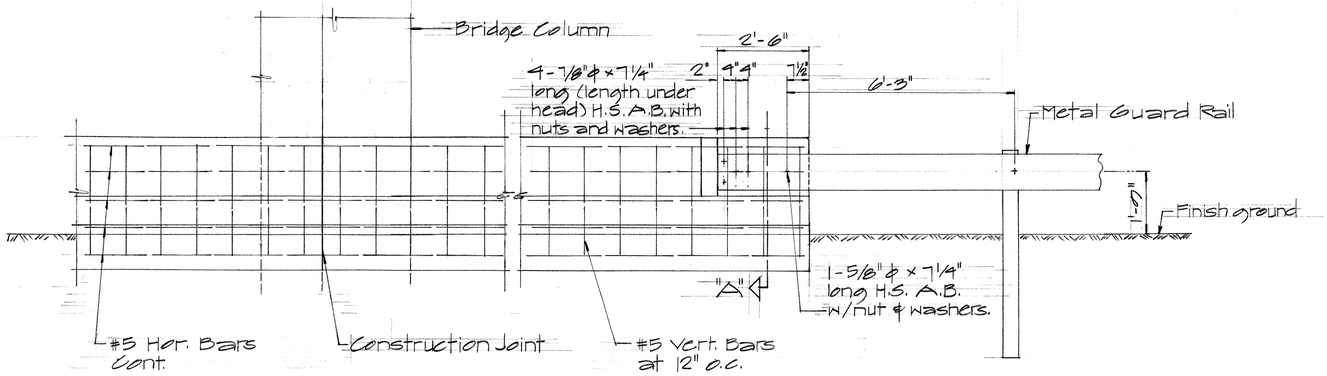

ELEVATION

CONCRETE BARRIER DET.
Sc. 1/2"=1'-0"

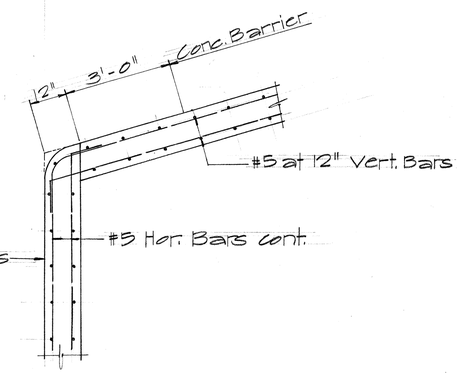

TYP. CORNER DET.
Sc. 1/2"=1'-0"

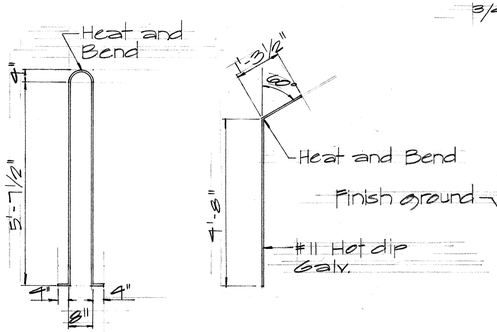

FRONT SIDE

ANCHOR BAR DET.
Sc. 1/2"=1'-0"

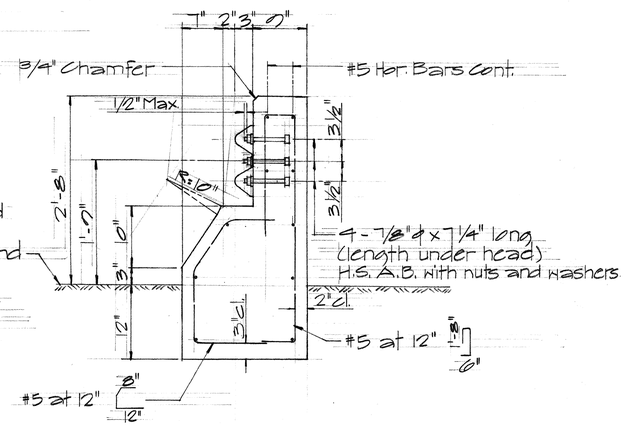

SECTION "A"
Sc. 1"=1'-0"

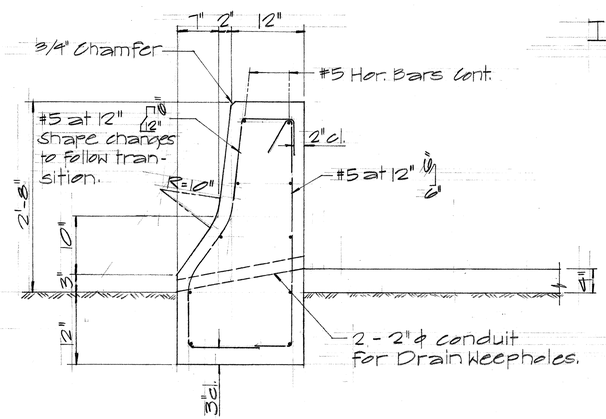

TYP. CONC. BARRIER SEC.
Sc. 1"=1'-0"

GENERAL NOTES

1- The Vehicular Impact Barrel Assembly shall include furnishing and installing all barrels, wire rope and fittings, all bolts, nuts, washers and eye bars and all fabrication and necessary coatings and painting together with all other attachments and appurtenances necessary to complete the assembly.

2- Concrete for Concrete Barrier, Anchor Block and Buttress shall be Class "A-1" concrete.

3- H.S. Bolts shall conform to the requirements of ASTM A-325.

4- Special End Shoe shall be fabricated from 10 ga. steel conforming to the requirements of AASHO 180.

5- Exterior Barrels shall be painted with White Reflectorized Paint.

THIS SHEET IS A SUPPLEMENT TO THE CONTRACT PLANS.

STATE OF HAWAII
DEPARTMENT OF TRANSPORTATION
HIGHWAYS DIVISION

DETAIL OF STEEL DRUM IMPACT ATTENUATOR

INTERSTATE ROUTE H-1
(LUNALILO FREEWAY)
PELE STREET TO VICTORIA STREET
F.A.I. PROJECT NO. I-HI-1(31) UNIT 1

Sc. As Shown April, 1960

SHEET No. OF SHEETS

CO 34 S-7

ORIGINAL PLAN		DATE
	SURVEY PLOTTED BY	
	DRAWN BY	
	TRACED BY	
	DESIGNED BY	
NOTE BOOK	QUANTITIES BY	
No.	CHECKED BY	

PRINTED ON NO. 1000H CLEARPRINT

FED. ROAD DIST. NO.	STATE	FED. AID PROJ. NO.	FISCAL YEAR	SHEET NO.	TOTAL SHEETS
HAWAII	HAW.	I-HI-1(31) UNIT 1	1969	CO 34 S8	202

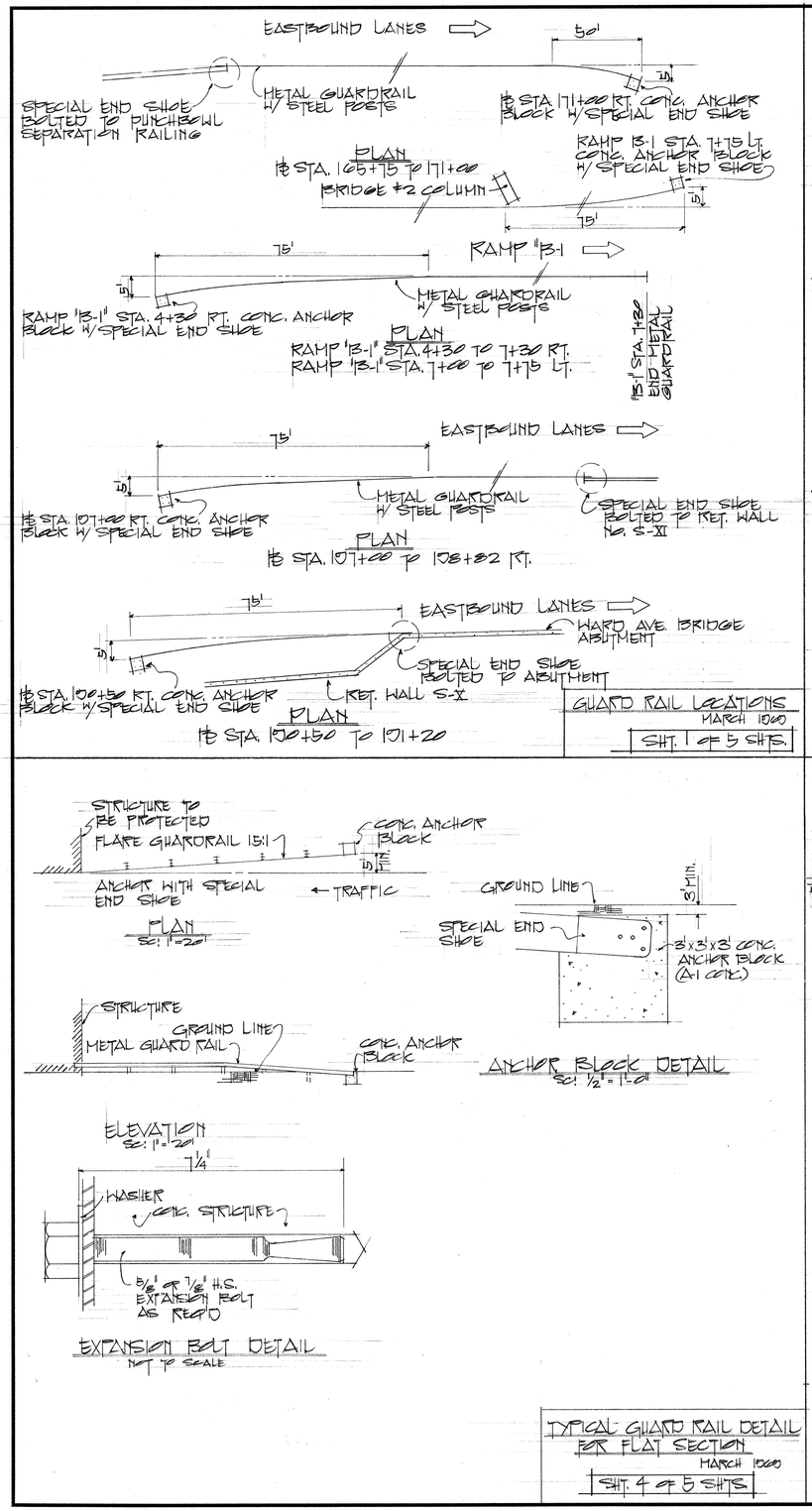

GUARD RAIL LOCATIONS
MARCH 1969
SHT. 1 OF 5 SHTS.

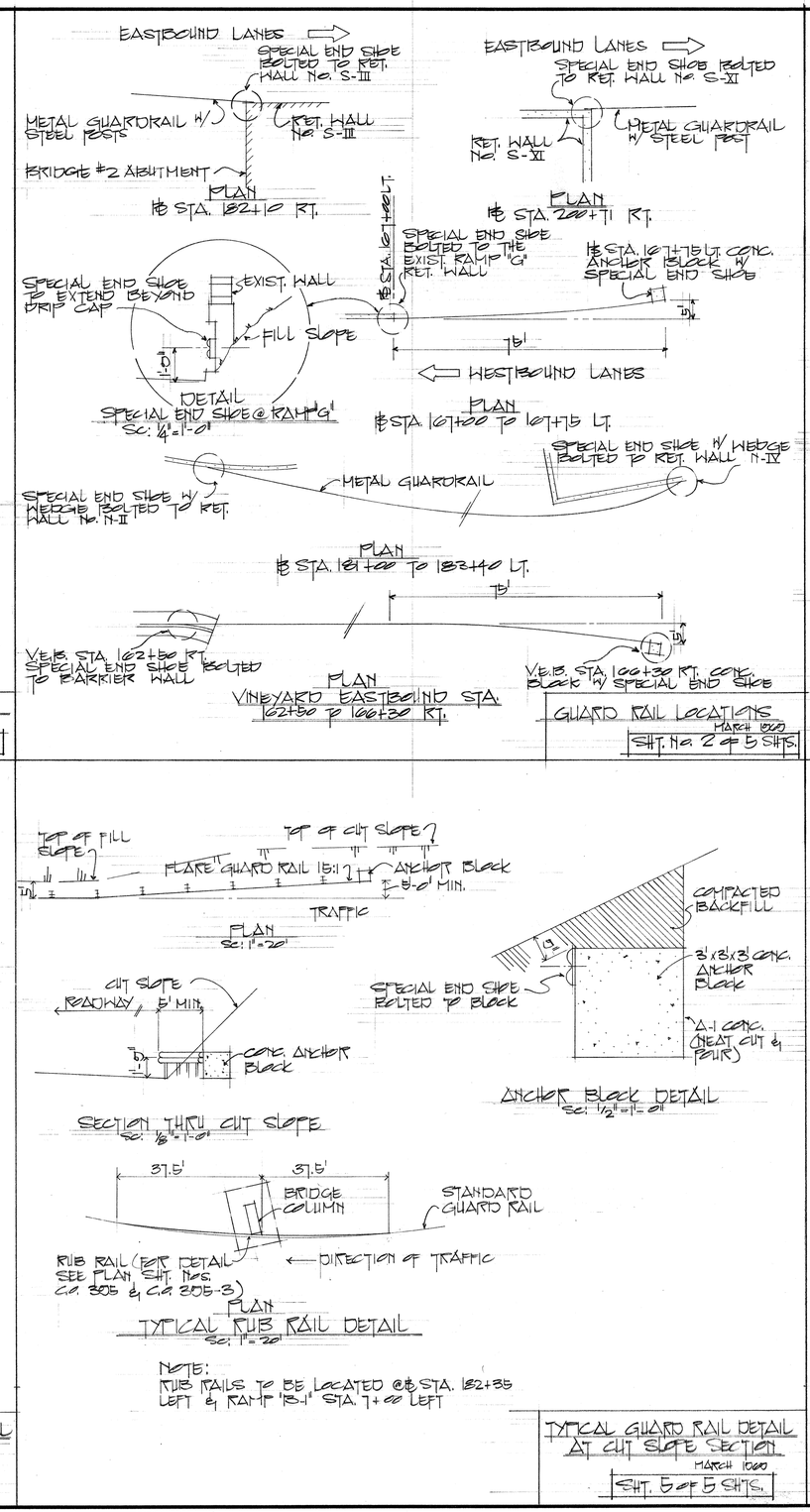

GUARD RAIL LOCATIONS
MARCH 1969
SHT. No. 2 OF 5 SHTS.

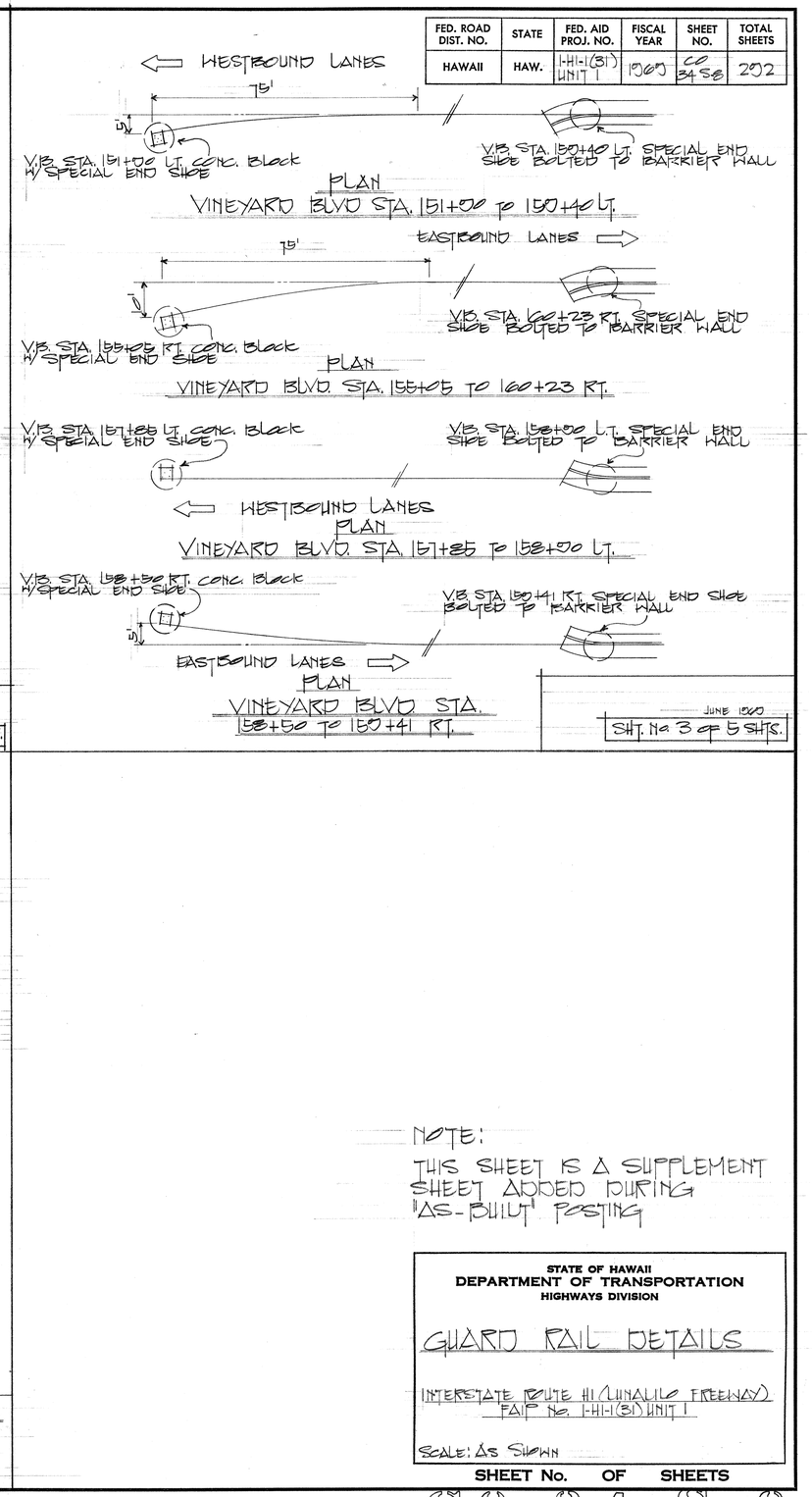

JUNE 1969
SHT. No. 3 OF 5 SHTS.

TYPICAL GUARD RAIL DETAIL FOR FLAT SECTION
MARCH 1969
SHT. 4 OF 5 SHTS.

NOTE:
RUB RAILS TO BE LOCATED @ ℄ STA. 182+35 LEFT & RAMP "B-1" STA. 7+00 LEFT

TYPICAL GUARD RAIL DETAIL AT CUT SLOPE SECTION
MARCH 1969
SHT. 5 OF 5 SHTS.

NOTE:
THIS SHEET IS A SUPPLEMENT SHEET ADDED DURING "AS-BUILT" POSTING

STATE OF HAWAII
DEPARTMENT OF TRANSPORTATION
HIGHWAYS DIVISION

GUARD RAIL DETAILS

INTERSTATE ROUTE H1 (LUNALILO FREEWAY)
FAIP No. I-HI-1(31) UNIT 1

SCALE: AS SHOWN

SHEET No. OF SHEETS
CO 34 S-8

ORIGINAL PLAN		DATE
	SURVEY PLOTTED BY	
	TRACED BY	
	DESIGNED BY	
	QUANTITIES BY	
	CHECKED BY	
NOTE BOOK		
No.		

K+E CRYSTALENE® LA 2920 TRACING PAPER

FED. ROAD DIST. NO.	STATE	FED. AID PROJ. NO.	FISCAL YEAR	SHEET NO.	TOTAL SHEETS
HAWAII	HAW.	I-H1-1(81) UNIT 1	1967	35	232

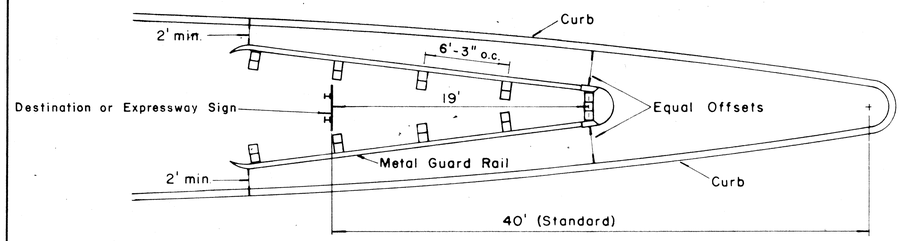

GORE MOUNTED SIGN

Scale: 3/16" = 1'-0"

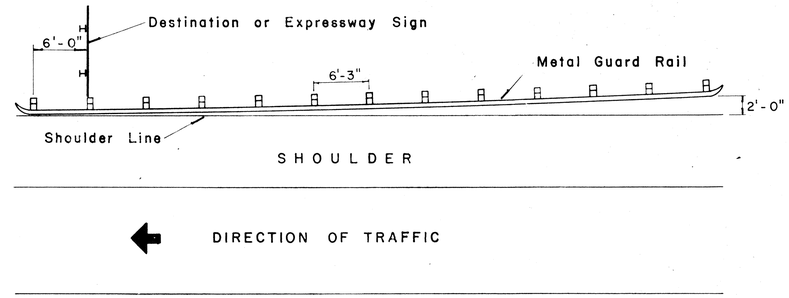

SHOULDER MOUNTED SIGN

Scale: 1/8" = 1'-0"

INSTALLATION OF METAL GUARD RAIL FOR DESTINATION AND EXPRESSWAY SIGNS

X	Y					
	W=3'	W=4'	W=5'	W=6'	W=7'	W=8'
12.5	0.19	0.16	0.14	0.12	0.09	0.08
25.0	0.75	0.64	0.55	0.49	0.35	0.32
37.5	1.69	1.44	1.25	1.10	0.78	0.72
50.0	3.00	2.56	2.22	1.96	1.38	1.28
62.5		4.00	3.47	3.06	2.16	2.00
75.0			5.00	4.41	3.11	2.85
87.5				6.00	4.23	3.92
100.0					5.53	5.12
112.5					7.00	6.48
125.0						8.00

W = GUARD RAIL FLARE

X = DISTANCE FROM POST AT BRIDGE TO OFFSET POINTS

Y = GUARD RAIL FLARE OFFSET

GUARD RAIL OFFSET

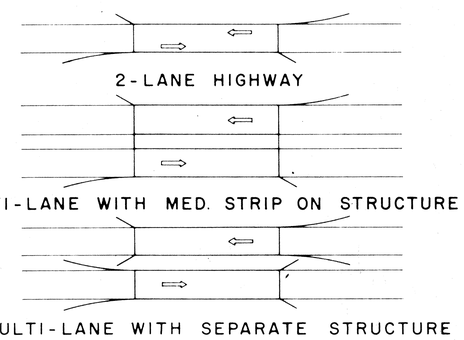

TYPICAL GUARD RAIL FLARES AT STRUCTURE APPROACHES

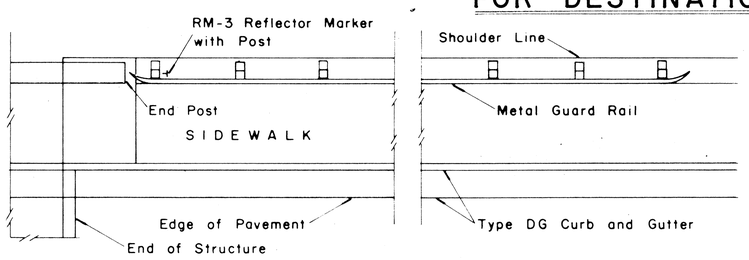

SIDEWALK CARRIED THROUGH STRUCTURE

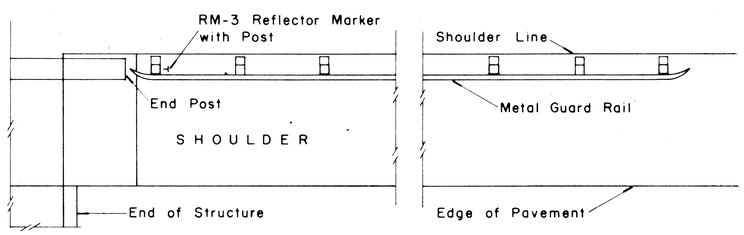

SHOULDER CARRIED THROUGH STRUCTURE

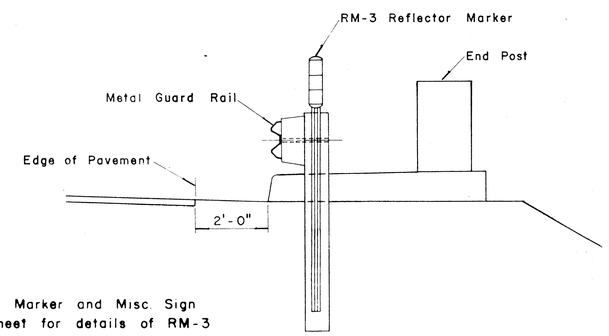

NOTE
See F.A. Marker and Misc. Sign Detail sheet for details of RM-3 Reflector Marker with Post.

SECTION "A-A"

Scale: 1/2" = 1'-0"

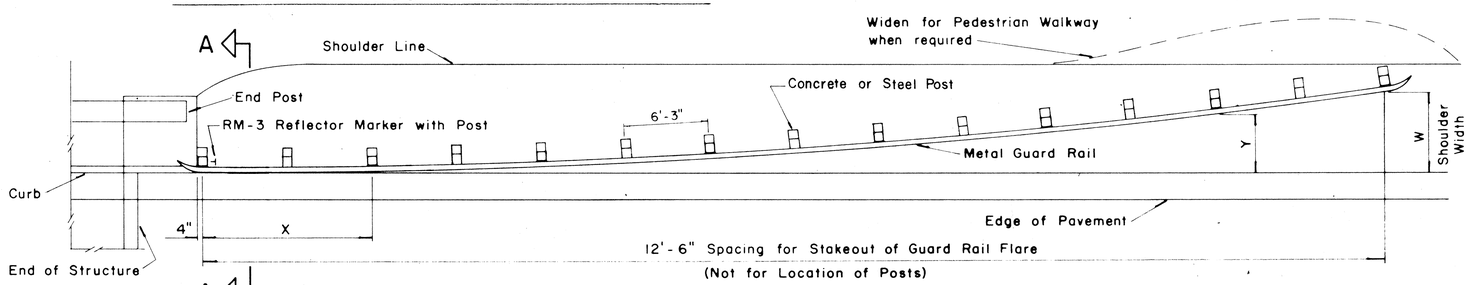

SHOULDER NOT CARRIED THROUGH STRUCTURE

INSTALLATION OF METAL GUARD RAIL FLARE AT STRUCTURES

Scale: 3/16" = 1'-0"

STATE OF HAWAII
DEPARTMENT OF TRANSPORTATION
HIGHWAYS DIVISION

STANDARD DETAILS
METAL GUARD RAILS
AT
STRUCTURES & GUIDE SIGNS

Scale: As Noted

SHEET No. 5 OF 10 SHEETS

35

ORIGINAL PLAN	SURVEY PLOTTED BY DRAWN BY TRACED BY DESIGNED BY QUANTITIES BY CHECKED BY	DATE
NOTE BOOK		
No.		

PRINTED ON CLEARPRINT 1000 H

FED. ROAD DIST. NO.	STATE	FED. AID PROJ. NO.	FISCAL YEAR	SHEET NO.	TOTAL SHEETS
HAWAII	HAW.	S-41-1(8) UNIT 1	1967	36	252

BOLT DIMENSIONS

TYPE A BOLT	D	L
Splice Bolt	5/16"	1 1/4"
Post Bolt for Conc. Post W/ Double Wood Blocks	3/32"	25"
Post Bolt for Conc. Post W/ Single Wood Block	3/32"	18"
Rail Bolt for Metal Block	3/32"	2"

BOLT DIMENSIONS

TYPE B BOLT	L
Post Bolt for Conc. Post W/ Metal Blocks	9 1/2"
Post Bolt for Metal Post W/ Metal Block	1 3/4"

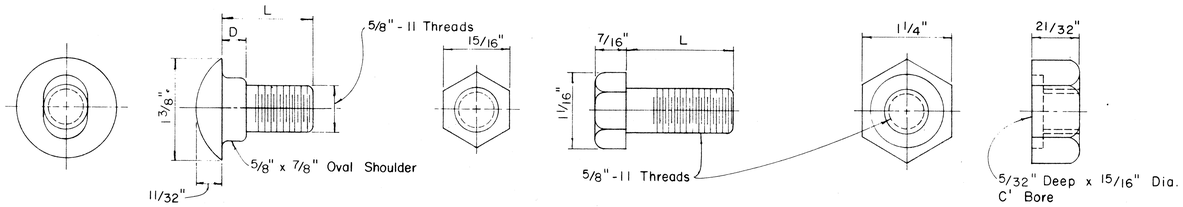

TYPE A BOLT

TYPE B BOLT

HEXAGON NUT

Scale: Full Size

SPLICE RAIL AND POST BOLTS

Scale: Full Size

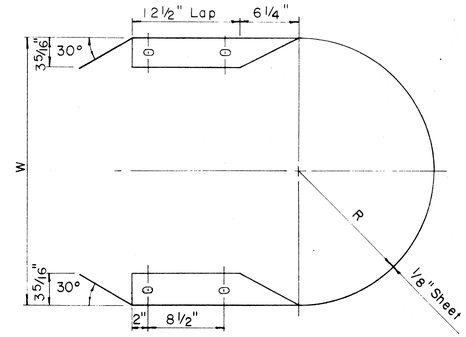

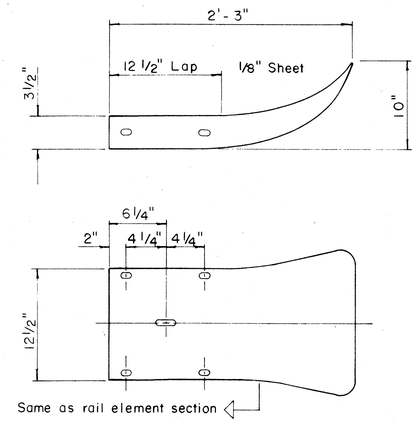

FLARED END

Scale: 1 1/2" = 1' - 0"

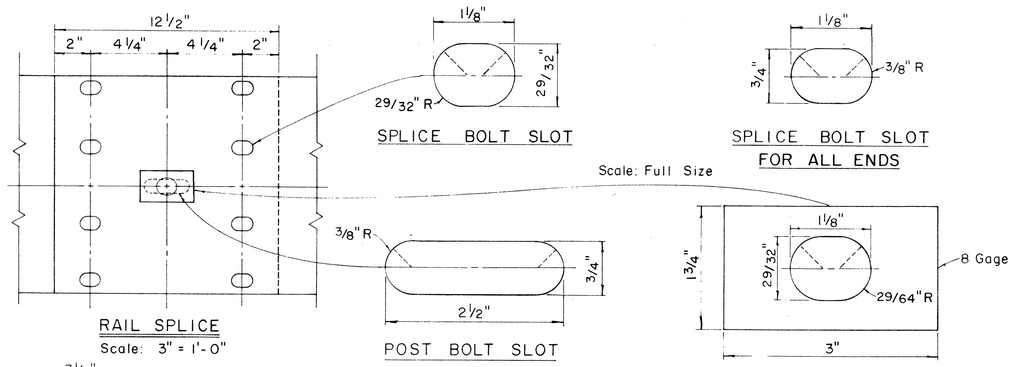

RAIL SPLICE

Scale: 3" = 1'-0"

SPLICE BOLT SLOT

POST BOLT SLOT

SPLICE BOLT SLOT FOR ALL ENDS

RAIL WASHER

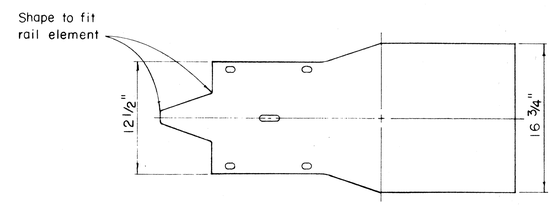

MEDIAN END

Scale 1 1/2" = 1'-0"

MEDIAN END DIMENSIONS

TYPE OF POST AND BLOCK	W	R
Double Metal Guard Rail on Concrete Post with Wood Blocks	29 3/4"	14 7/8"
Double Metal Guard Rail on Concrete Post with Metal Blocks (BJ6)	26 1/2"	13 1/4"
Double Metal Guard Rail on Metal Post with Metal Blocks (BJ6)	24 3/8"	12 3/16"

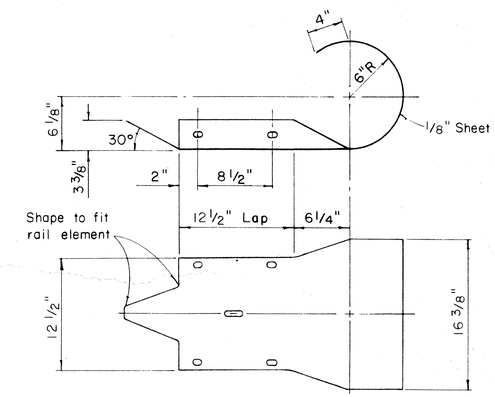

CURVED END

Scale: 1 1/2" = 1'-0"

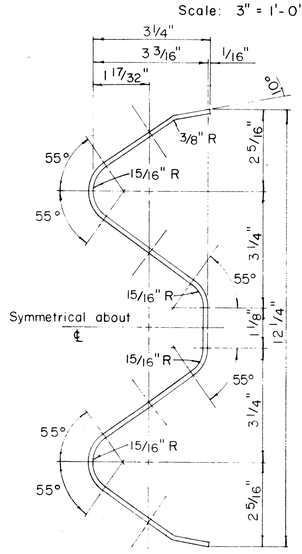

RAIL ELEMENT SECTION

Scale: 6" = 1'-0"

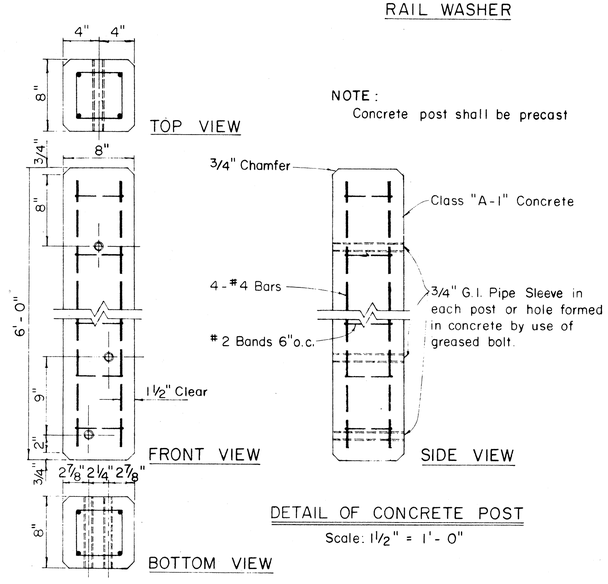

TOP VIEW

FRONT VIEW

BOTTOM VIEW

NOTE:
Concrete post shall be precast

SIDE VIEW

DETAIL OF CONCRETE POST

Scale: 1 1/2" = 1'- 0"

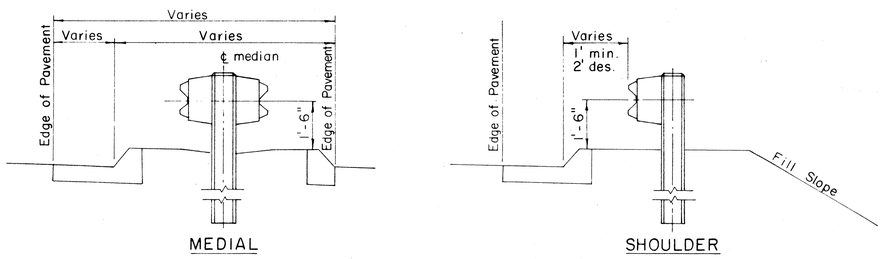

MEDIAL

SHOULDER

TYPICAL GUARD RAIL DETAIL

Scale: 1/2" = 1'-0"

STATE OF HAWAII
DEPARTMENT OF TRANSPORTATION
HIGHWAYS DIVISION

STANDARD DETAILS

METAL GUARD RAIL

Scale: as noted

SHEET No. 6 OF 10 SHEETS

ORIGINAL PLAN	SURVEY PLOTTED BY	DATE
	DRAWN BY	"
	TRACED BY	"
	DESIGNED BY	"
NOTE BOOK	QUANTITIES BY	"
No.	CHECKED BY	"

PRINTED ON NO. 1000H CLEARPRINT

36

FED. ROAD DIST. NO.	STATE	FED. AID PROJ. NO.	FISCAL YEAR	SHEET NO.	TOTAL SHEETS
HAWAII	HAW.	I-21-1(8H) UNIT 1	1961	37	292

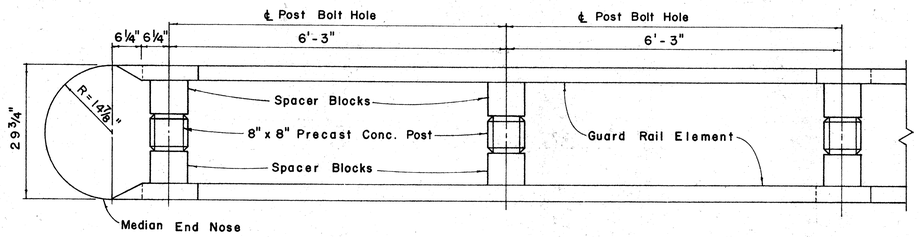

PLAN

Scale: ¾" = 1'-0"

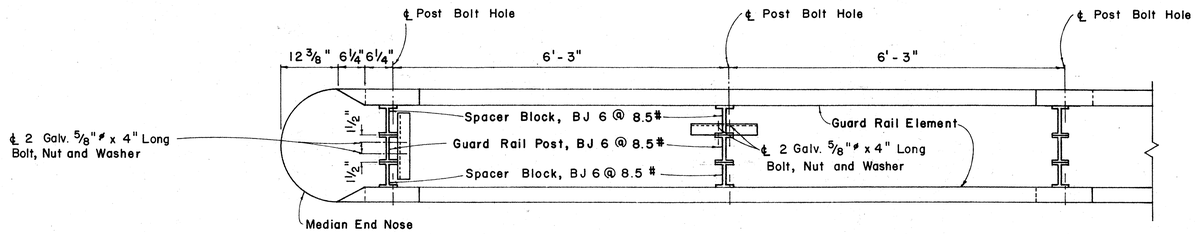

PLAN

Scale: ¾" = 1'-0"

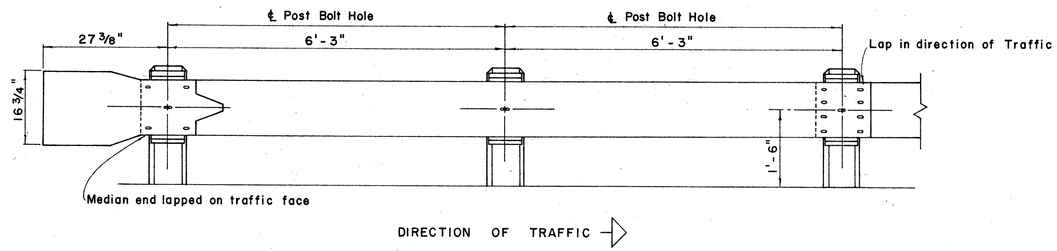

ELEVATION

METAL GUARD RAIL ON CONCRETE POSTS AND WOOD SPACER BLOCKS

Scale: ¾" = 1'-0"

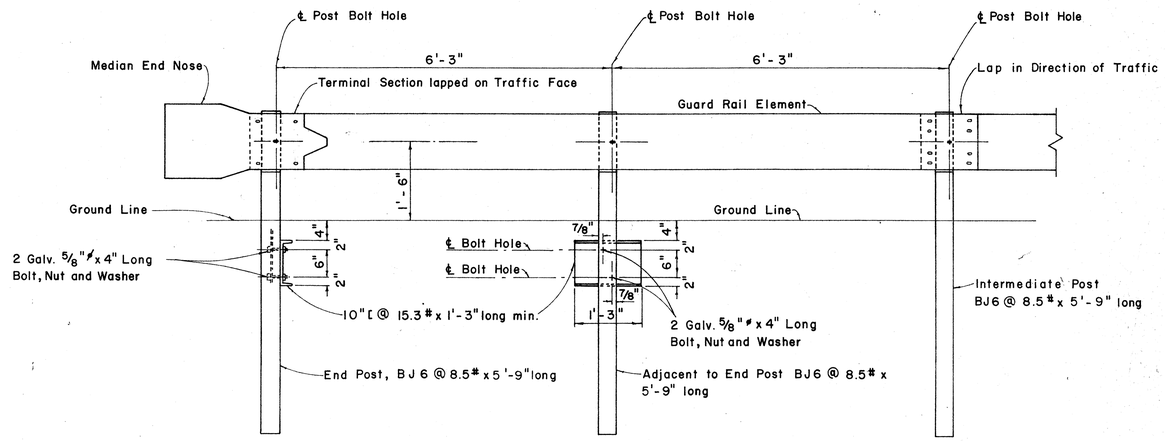

ELEVATION

METAL GUARD RAIL ON METAL POSTS AND METAL SPACER BLOCKS

Scale: ¾" = 1'-0"

DETAIL FOR DOUBLE METAL GUARD RAIL IN MEDIAN

Scale: As Shown

ORIGINAL PLAN	
	SURVEY PLOTTED BY ____ DATE
	DRAWN BY " "
	TRACED BY " "
NOTE BOOK	DESIGNED BY " "
No. ____	QUANTITIES BY " "
	CHECKED BY " "

STATE OF HAWAII
DEPARTMENT OF TRANSPORTATION
HIGHWAYS DIVISION

STANDARD DETAILS

METAL GUARD RAIL

SHEET No. 7 OF 10 SHEETS

37

PRINTED ON NO. 1000H CLEARPRINT

FED. ROAD DIST. NO.	STATE	FED. AID PROJ. NO.	FISCAL YEAR	SHEET NO.	TOTAL SHEETS
HAWAII	HAW.	F-61-1 (91) UNIT 1	1967	38	252

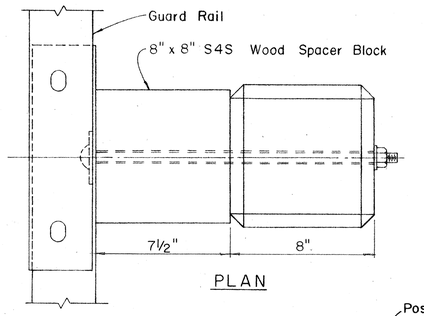

PLAN

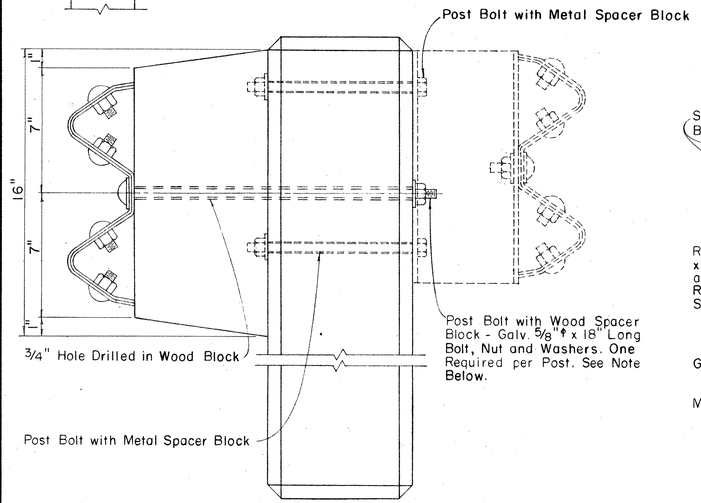

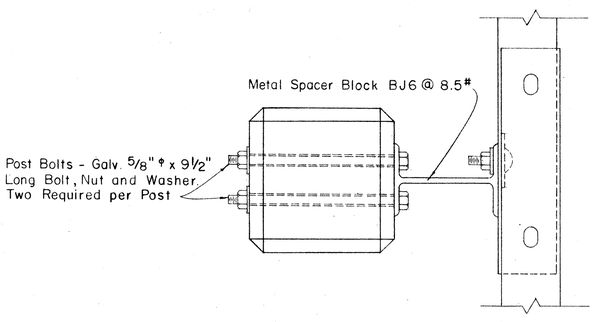

PLAN

SINGLE METAL GUARD RAIL ON PRECAST CONCRETE POST WITH WOOD OR METAL SPACER BLOCK

Scale: 3" = 1' - 0"

NOTE:

Single Guard Rails Shown. For Double Guard Rails Additional Spacer Blocks and Rail Elements Required on Opposite Side of Posts. See Bolt Schedule for Required Bolt Lengths.

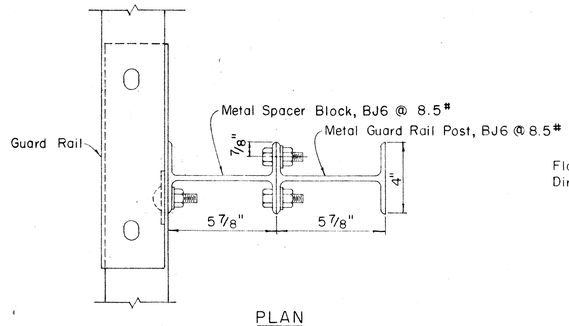

PLAN

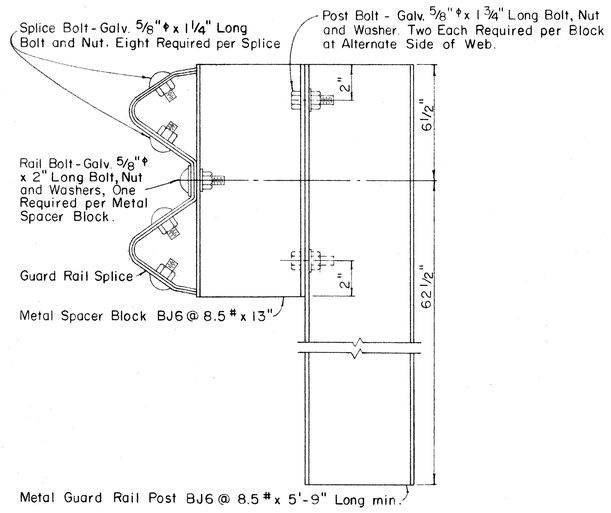

SINGLE METAL GUARD RAIL ON METAL POST WITH METAL SPACER BLOCK

Scale: 3" = 1' - 0"

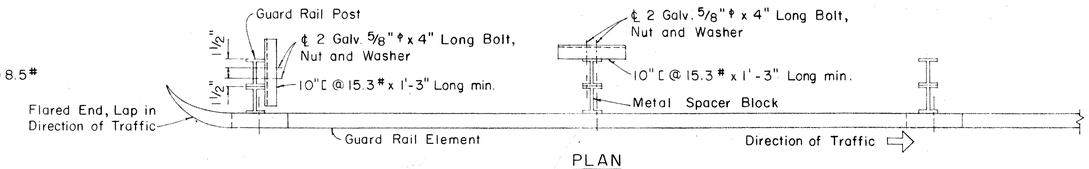

PLAN

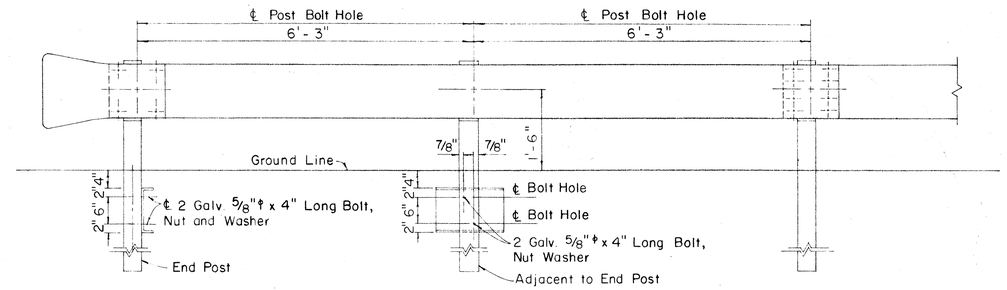

ELEVATION

METAL GUARD RAIL ON METAL POST WITH METAL SPACER BLOCK

Scale: ¾" = 1' - 0"

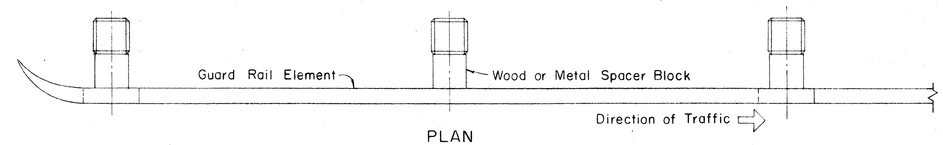

PLAN

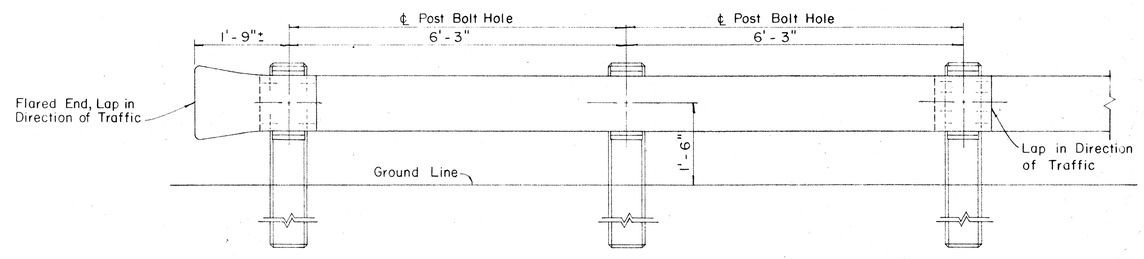

ELEVATION

METAL GUARD RAIL ON CONCRETE POST WITH WOOD OR METAL SPACER BLOCK

Scale: ¾" = 1' - 0"

DETAILS FOR SINGLE GUARD RAIL

STATE OF HAWAII
DEPARTMENT OF TRANSPORTATION
HIGHWAYS DIVISION

STANDARD DETAILS

METAL GUARD RAIL

Scale: as noted

SHEET No. 8 OF 10 SHEETS

ORIGINAL PLAN		DATE
	SURVEY PLOTTED BY	
	DRAWN BY	
	TRACED BY	
NOTE BOOK	DESIGNED BY	
No.	QUANTITIES BY	
	CHECKED BY	

FED. ROAD DIST. NO.	STATE	FED. AID PROJ. NO.	FISCAL YEAR	SHEET NO.	TOTAL SHEETS
HAWAII	HAW.	I-H1-1(31) Unit 1	1967	30	202

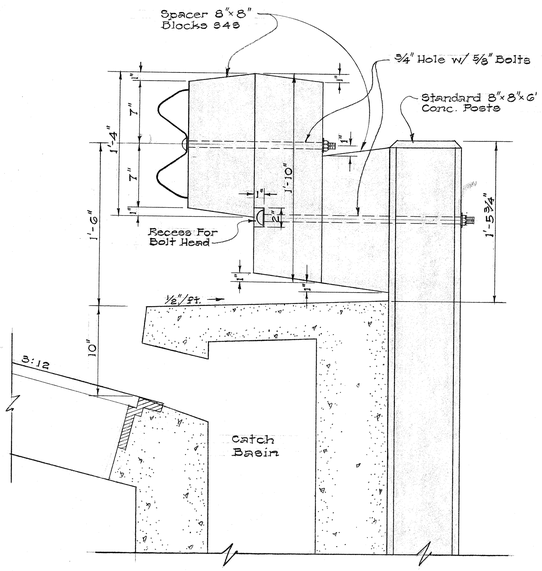

METAL GUARD RAIL ON CONC. POST

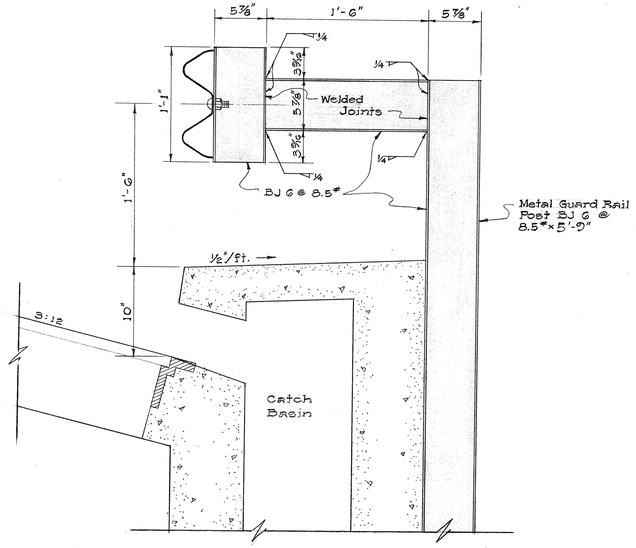

METAL GUARD RAIL ON METAL POST

GUARD RAIL INSTALLATION OVER CATCH BASINS IN SHOULDER

Scale: 1 1/2" = 1'-0"

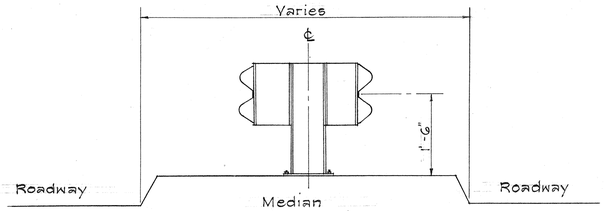

TYPICAL INSTALLATION

Scale: 3/4" = 1'-0"

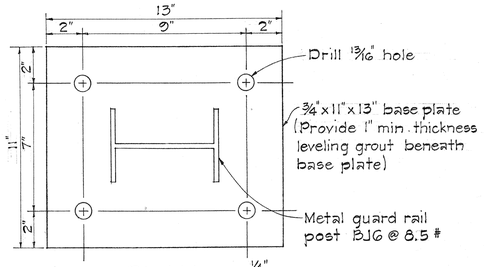

PLAN

Scale: 1" = 3'-0"

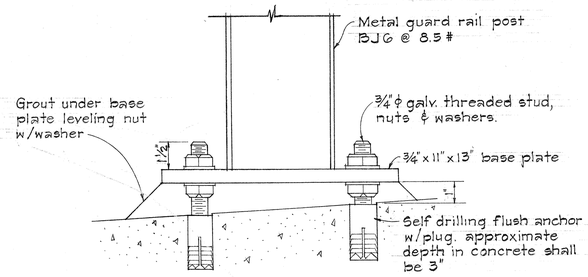

DETAIL OF CONNECTION

Scale: 1" = 3'-0"

METAL GUARD RAIL ON MEDIAN ON BRIDGE STRUCTURE

METAL GUARD RAIL QUANTITIES

LOCATION			ESTIMATED LENGTH Lineal Feet	
ROAD	STATION TO STATION	SIDE	SINGLE	DOUBLE
Freeway	156 + 40* to 178 + 25	Median		1,383
Freeway	189 + 50 to 191 + 20	Median		170
Freeway	192 + 45 to 198 + 75	Median		630
Freeway (Westbound)	178 + 25 to 189 + 50	Median	1,125	
Freeway (Westbound)	191 + 20 to 192 + 45	Median	125	
Freeway (Eastbound)	178 + 25 to 189 + 50	Median	1,125	
Freeway (Eastbound)	191 + 20 to 192 + 45	Median	125	
Freeway (Eastbound)	179 + 80 to 182 + 10	Right	245	
Freeway (Eastbound)	200+ 75 to 202 + 25	Right	150	
Freeway (Westbound)	181 + 40 to 183 + 35	Left	185	
Ramp "H"	165 + 75 to 170 + 75		500	
Vineyard (Westbound)	Vin. Sta. 157+83 to 158 + 83	Left	100	
Ramp B-1	B-1 Sta. 5+40 to 7+05	Left	170	
Ramp B-1	B-1 Sta. 4+35 to 7+30	Right	295	
Ramp "C"	0+40 to 2+22	Right	190	
Ramp "C"	5+22 to 7+05	Right	185	
Vineyard (Eastbound)	Vin. Sta. 158+67 to 159 + 42	Left	75	
Vineyard	Vin. Sta. 151+80 to 159 + 37	Median	757	
Vineyard (Westbound)	Vin. Sta. 163+92 to 164 + 81	Left	90	
Vineyard (Westbound)	Vin. Sta. 165+00 to 167 + 25	Right	225	
Vineyard (Eastbound)	Vin. Sta. 155+05 to 160 + 23	Right	523	
Vineyard (Eastbound)	Vin. Sta. 162+50 to 166 + 30	Right	380	
Pele St.	Cul - De - Sacs		65	
Miller St.	" " "		65	
Frear St.	" " "		65	
Lauhala St.	" " "		25	
Alapai St.	" " "		25	
Victoria St.	" " "		65	

* EQUATION 156+92.15 = 164 +92.27

LOCATION			ESTIMATED LENGTH Lineal Feet	
ROAD	STATION TO STATION	SIDE	SINGLE	DOUBLE
Freeway	155 + 80 to 156 + 30	Left	70	
Freeway	167 + 00 to 167 + 60	Left	60	
Freeway	190 + 60 to 191 + 40	Right	80	

NOTE:
All the quantities shown are original theoretical quantities. For actual quantities, refer to project ledger and/or computation book.

ORIGINAL PLAN		DATE
	SURVEY PLOTTED BY	
	DRAWN BY	
	TRACED BY	
NOTE BOOK	DESIGNED BY	
	QUANTITIES BY	
No.	CHECKED BY	

STATE OF HAWAII
DEPARTMENT OF TRANSPORTATION
HIGHWAYS DIVISION

METAL GUARD RAIL SUMMARY & DETAILS OF GUARD RAILS OVER CATCH BASINS AND ON BRIDGE STRUCTURE
INTERSTATE ROUTE H-1
(LUNALILO FREEWAY)
Pele Street to Victoria Street
F.A.I. Proj. No. I-H1-1(31), Unit 1

Scale: 1 1/2" = 1'-0" Date: May, 1966

SHEET No. 9 OF 10 SHEETS

PRINTED ON NO. 1000H CLEARPRINT

FED. ROAD DIST. NO.	STATE	FED. AID PROJ. NO.	FISCAL YEAR	SHEET NO.	TOTAL SHEETS
HAWAII	HAW.	I-HI-1(31) UNIT 1	1967	00305	2002

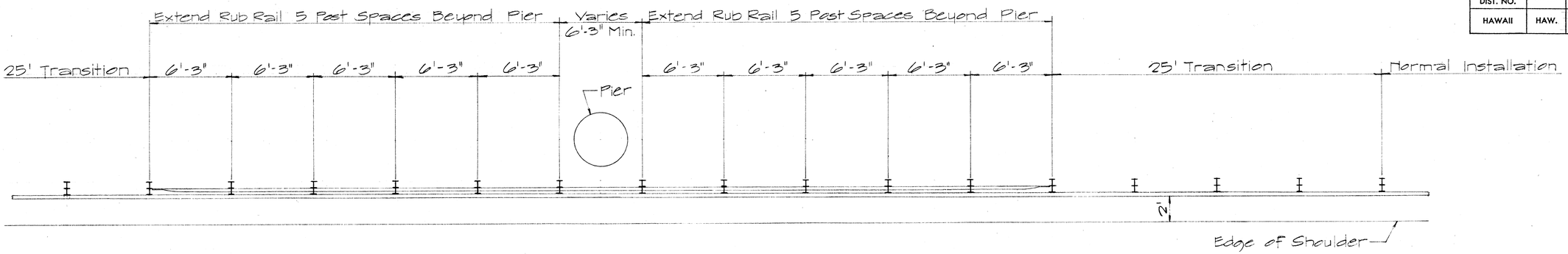

PLAN

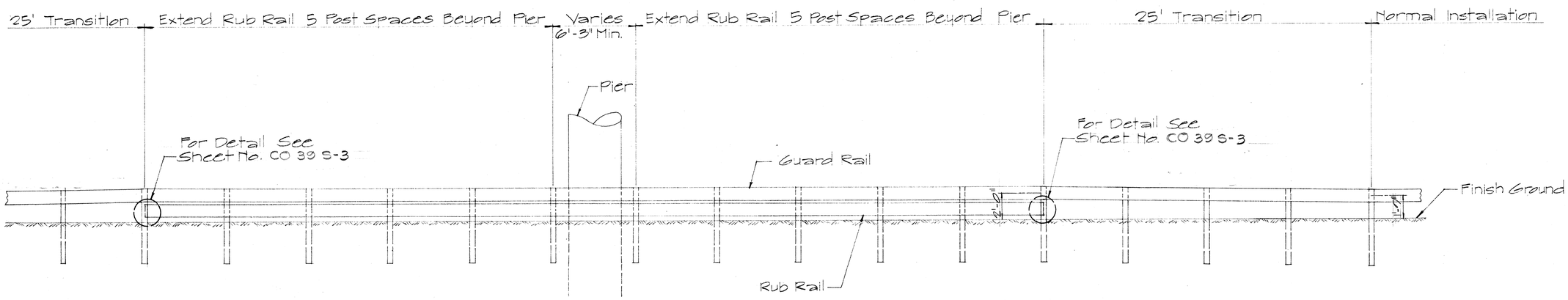

ELEVATION

DETAIL OF GUARD RAIL INSTALLATION AT PIER

Sc. 1/4" = 1'-0"

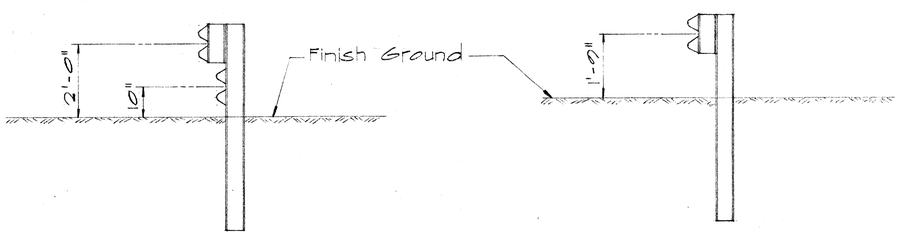

TYP. SEC. AT PIER

TYP. SEC. AT NORMAL INSTALLATION

TYP. GUARD RAIL SECTIONS

Sc. 1/2" = 1'-0"

THIS SHEET SUPERCEDES AND REPLACES SHEET CO 305 DATED NOVEMBER 30, 1967.

STATE OF HAWAII
DEPARTMENT OF TRANSPORTATION
HIGHWAYS DIVISION

DETAILS OF RUB RAIL

PELE STREET TO VICTORIA STREET
F.A.I. PROJ. No. I-HI-1(31), UNIT 1

Sc. As Noted JUNE 1967

SHEET No. CO 39 S OF SHEETS

ORIGINAL PLAN	SURVEY PLOTTED BY	DATE
	DRAWN BY	
	TRACED BY	
	DESIGNED BY	
NOTE BOOK	QUANTITIES BY	
No.	CHECKED BY	

K+E CRYSTALENE® LA 2920 TRACING PAPER

FED. ROAD DIST. NO.	STATE	FED. AID PROJ. NO.	FISCAL YEAR	SHEET NO.	TOTAL SHEETS
HAWAII	HAW.	I-H1-1(31), Unit 1	1968	C03951	292

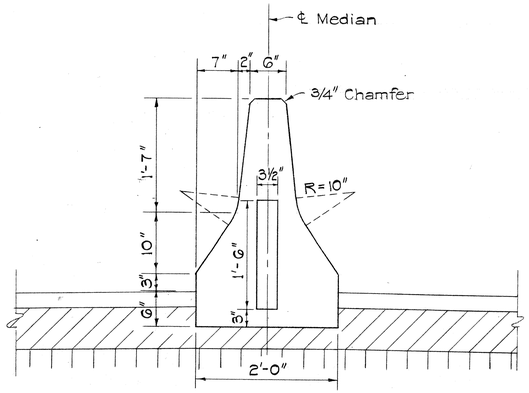

TYPICAL SECTION
(TANGENT SECTION)
Scale : 1" = 1'-0"

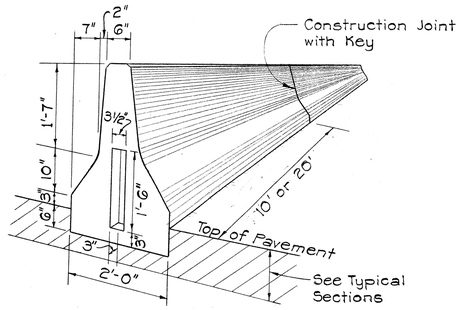

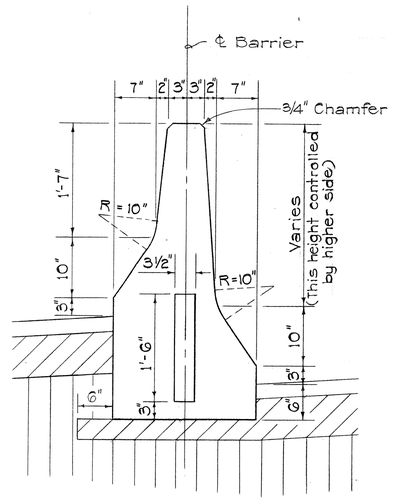

TYPICAL SECTION TYPE "C"
CONCRETE BARRIER
(SUPERELEVATED SECTION)
Scale : 1" = 1'-0"

DETAILS FOR CAST-IN-PLACE TYPE "C" CONCRETE BARRIER

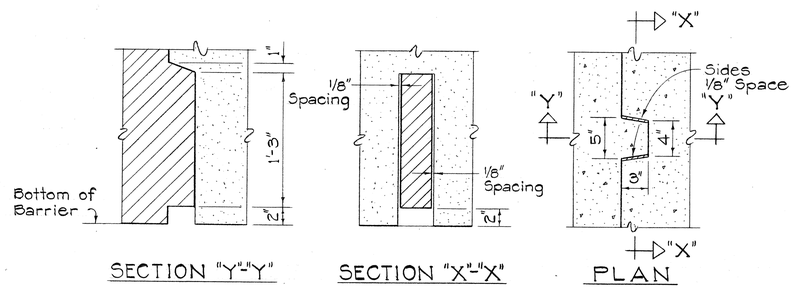

SECTION "Y"-"Y" SECTION "X"-"X" PLAN

TYPICAL CONSTRUCTION JOINT KEY
Scale : 1½" = 1'-0"

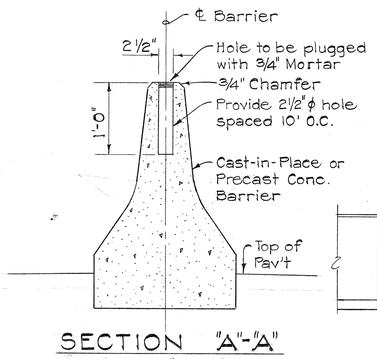

SECTION "A"-"A"
Scale : 1" = 1'-0"

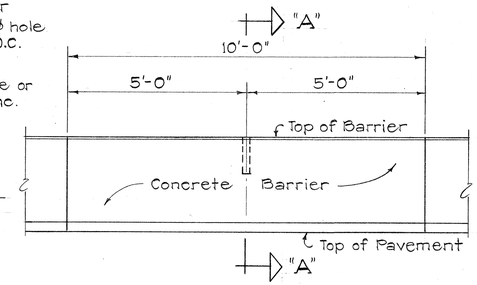

ELEVATION
10' LENGTH CONCRETE BARRIER
Scale : 1/2" = 1'-0"

NOTE:
All the quantities shown are original theoretical quantities. For actual quantities, refer to project ledger and/or computation book.

SUMMARY OF CONCRETE MEDIAN BARRIER

℄ STATION	TYPE "A" (LIN. FT.)	TYPE "B" (LIN. FT.)	TYPE "C" (LIN. FT.)	TYPE "C" AT EXPRESS-WAY SIGN (LIN. FT.)	TRANS. (LIN. FT.)
164+92 to 166+92			200		
166+92 to 167+48				6	50
167+48 to 176+62			914		
176+62 to 177+18				6	50
177+18 to 180+70			352		
180+70 to 181+10		80			
181+10 to 182+97			187		
182+97 to 183+53				6	50
183+53 to 191+12			759		
191+12 to 191+37					25
191+37 to 191+98	61				
191+98 to 192+42					44
192+42 to 192+73				6	25
192+73 to 202+00			927		
202+00 to 202+25					25
TOTALS	61	80	3339	24	269

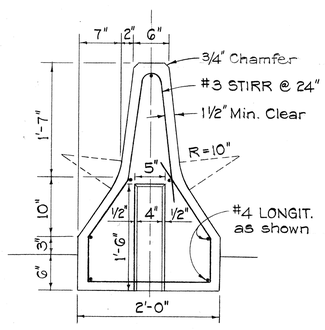

TYPICAL SECTION
Scale : 1" = 1'-0"

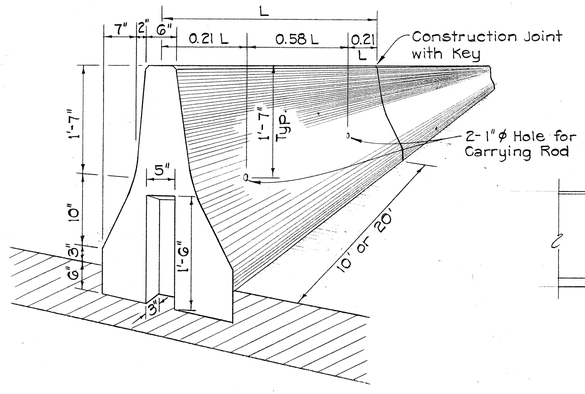

DETAILS FOR PRECAST TYPE "C" CONCRETE BARRIER

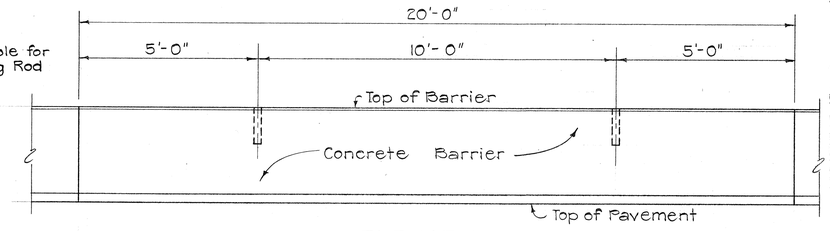

ELEVATION
20' LENGTH CONCRETE BARRIER
Scale : 1/2" = 1'-0"

HOLE SPACING DETAILS FOR CONC. BARRIER

NOTES :

1. Concrete for Concrete Barriers shall be A-1
2. Reinforcing Steel and Construction Joint shall be provided at all Structure Columns as shown in details for Type "A" Concrete Barrier (Incidental to Concrete Barrier)
3. Expansion Joint shall be constructed at ninety(90) foot intervals or at existing expansion joints of structures. (Use 1/2" pre-molded joint filler, incidental to Concrete Barrier)
4. Construction Joints with Keys shall be provided for all Concrete Barriers.
5. Precast Type "C" Concrete Barrier may be installed as an alternate to Cast-in-place Type "C" Concrete Barrier at tangent sections only.
6. 2½" ϕ hole spaced 10' o.c. as shown in details shall be provided for all types of Concrete Barriers. (Incidental to Concrete Barrier)

STATE OF HAWAII
DEPARTMENT OF TRANSPORTATION
HIGHWAYS DIVISION

CONCRETE MEDIAN BARRIER

INTERSTATE ROUTE H-1
(LUNALILO FREEWAY)
Pele Street to Victoria Street
F.A.I. Proj. No. I-H1-1(31), Unit 1

Scale : As Shown Date : Aug., 1968

SHEET No. OF SHEETS

THIS SHEET IS A SUPPLEMENT TO THE CONTRACT DRAWINGS

ORIGINAL PLAN
SURVEY PLOTTED BY
DRAWN BY
TRACED BY
DESIGNED BY
QUANTITIES BY
CHECKED BY
DATE
NOTE BOOK No.

PRINTED ON NO. 1000H CLEARPRINT

C03951

FED. ROAD DIST. NO.	STATE	FED. AID PROJ. NO.	FISCAL YEAR	SHEET NO.	TOTAL SHEETS
HAWAII	HAW.	I-H1-1(31), Unit 1	1968	C03952	292

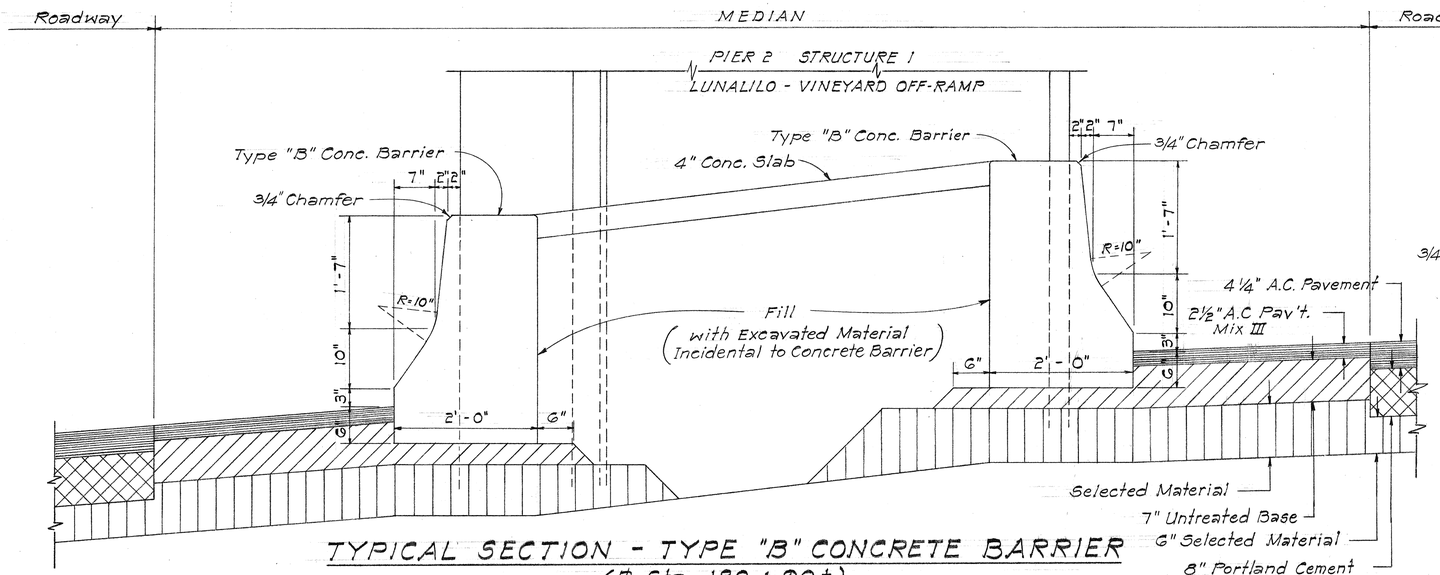

TYPICAL SECTION - TYPE "B" CONCRETE BARRIER
(℄ Sta. 180 + 90 ±)
Scale: 1" = 1'-0"

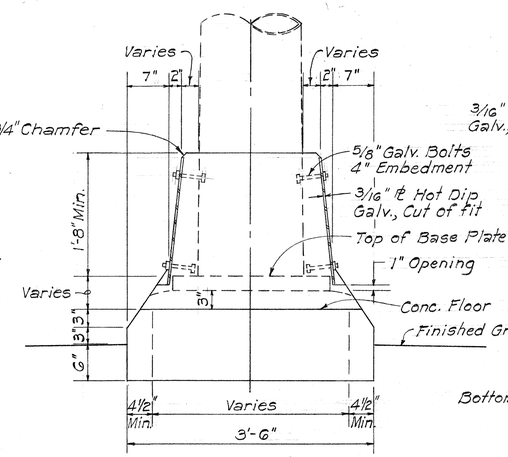

SECTION "B-B"

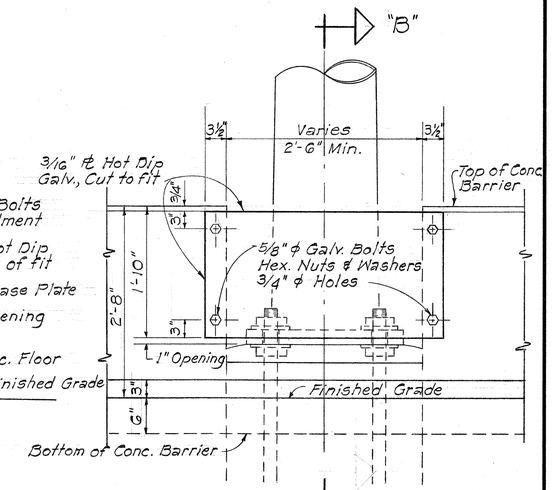

ELEVATION

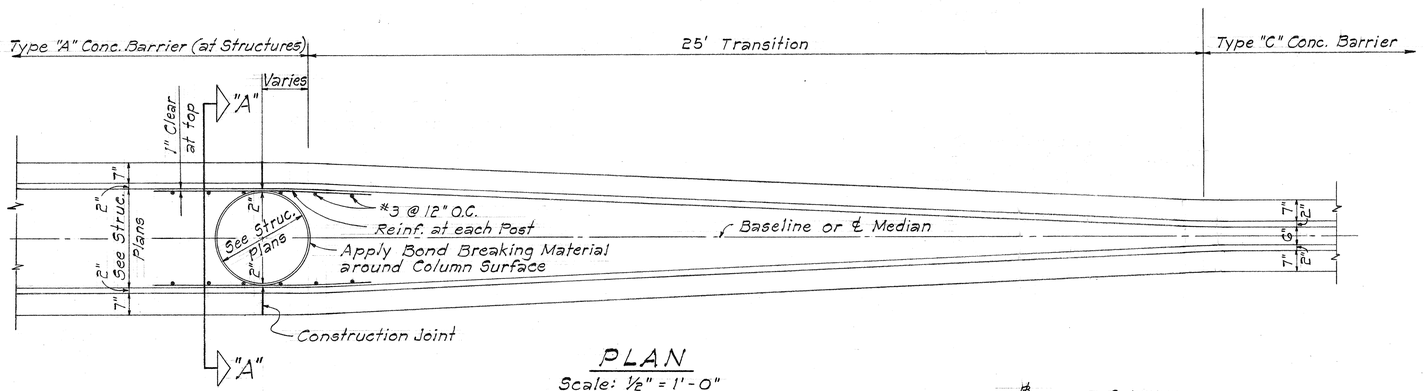

PLAN
Scale: 1/2" = 1'-0"

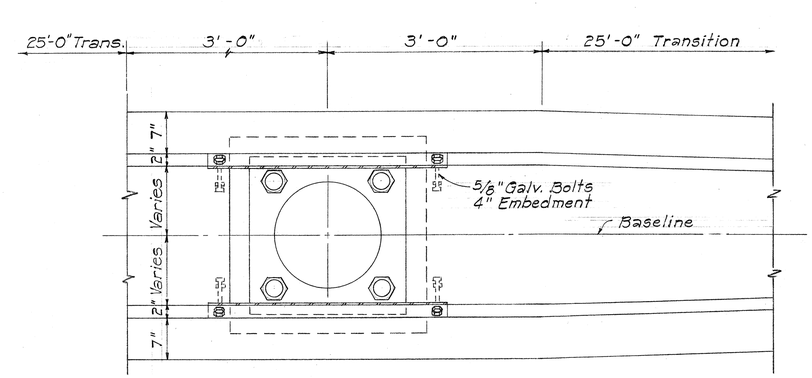

PLAN
TYPE "C" CONCRETE BARRIER AT EXPRESSWAY SIGN POLE
Scale : 1" = 1'-0"

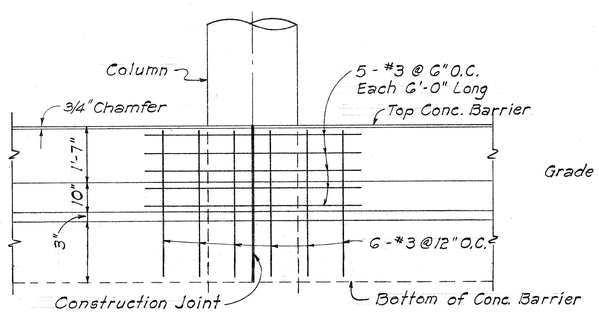

ELEVATION
Scale: 1/2" = 1'-0"

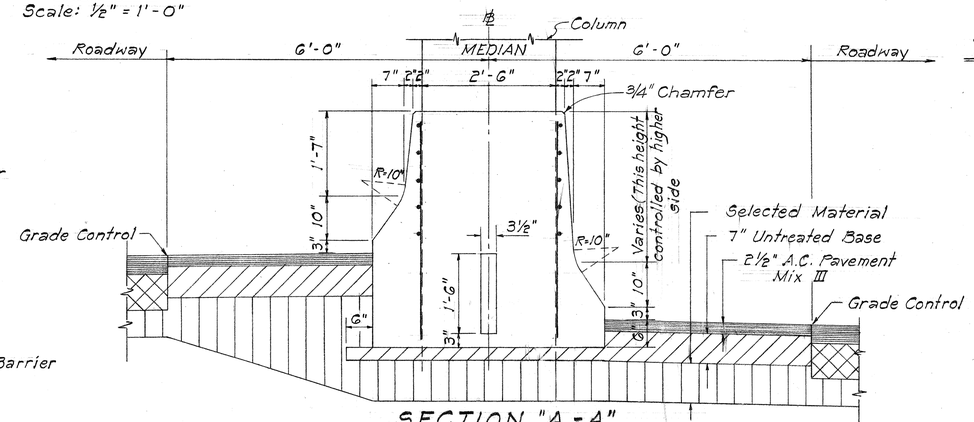

SECTION "A-A"
Scale: 3/4" = 1'-0"

TYPE "A" CONCRETE BARRIER

NOTE :

1. Constructing Concrete Barrier at Expressway Sign Pole including furnishing and installing steel plate, bolts, nuts and washers shall be considered incidental to Concrete Median Barrier and no extra payment shall be made.
2. The length of steel plate cover shall be determined in the field.
3. Refer to PLAN, TYPE "A" CONCRETE BARRIER for transition details of Type "C" Concrete Barrier at Expressway Sign Pole.
4. Constructing Concrete Barrier at Piers including furnishing and installing reinforcing steel shall be considered incidental to Concrete Median Barrier and no extra payment shall be made.

THIS SHEET IS A SUPPLEMENT TO THE CONTRACT DRAWINGS

STATE OF HAWAII
DEPARTMENT OF TRANSPORTATION
HIGHWAYS DIVISION

CONCRETE MEDIAN BARRIER

INTERSTATE ROUTE H-1
(LUNALILO FREEWAY)
Pele Street to Victoria Street
F.A.I. Proj. No. I-H1-1(31), Unit 1

Scale: As Shown Date: Aug., 1968

SHEET No. OF SHEETS

C03952

ORIGINAL PLAN	SURVEY PLOTTED BY	DATE
	DRAWN BY	
	TRACED BY	
NOTE BOOK	DESIGNED BY	
No.	QUANTITIES BY	
	CHECKED BY	

PRINTED ON NO. 1000H CLEARPRINT

FED. ROAD DIST. NO.	STATE	FED. AID PROJ. NO.	FISCAL YEAR	SHEET NO.	TOTAL SHEETS
HAWAII	HAW.	I-H-1 (31) UNIT 1	1967	003953	292

REVISED: 12-11-68
REVISED: 2-29-69

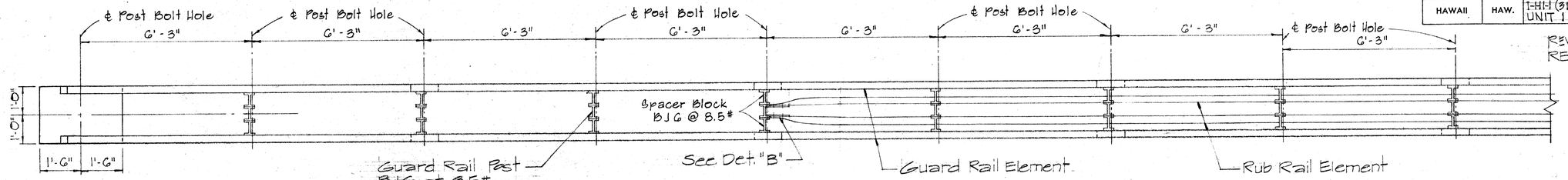

PLAN

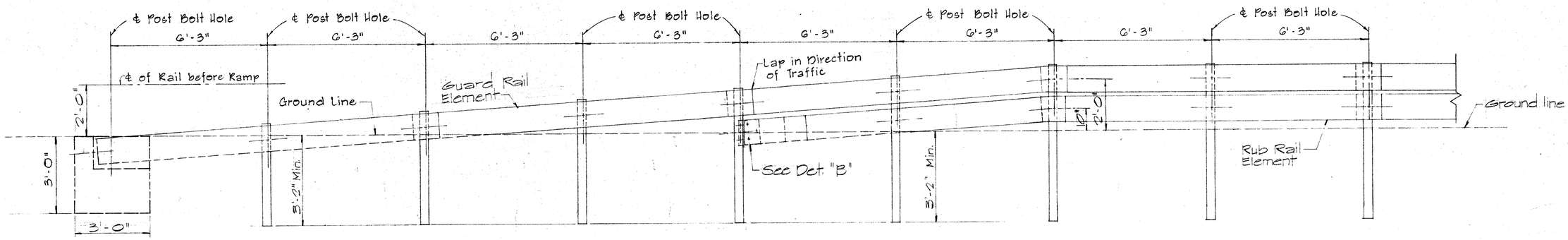

ELEVATION

STRAIGHT APPROACH - RAMP END ANCHORAGE (MEDIAN)

Scale: 1/2" = 1'-0"

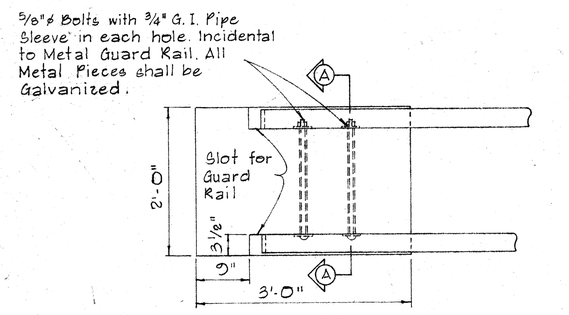

PLAN

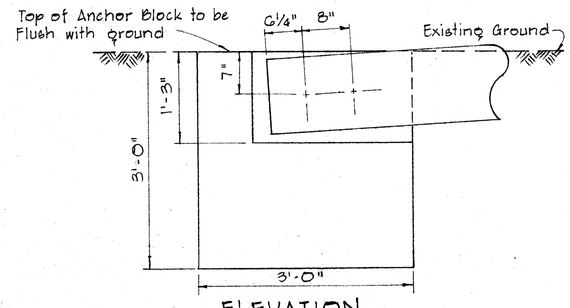

ELEVATION

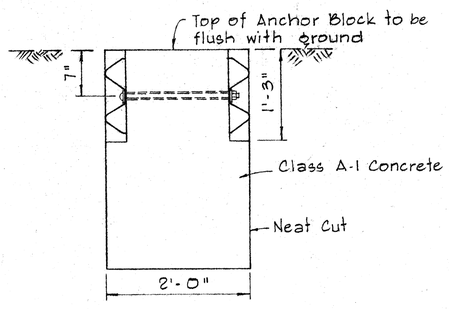

SECTION A-A

NOTE:
Concrete, Excavation, and Miscellaneous Appurtenances necessary to anchor the Guard Rail Ends, Shall be incidental to the Metal Guard Rail.

CONCRETE ANCHOR BLOCK FOR RAMP END

Scale: 1" = 1'-0"

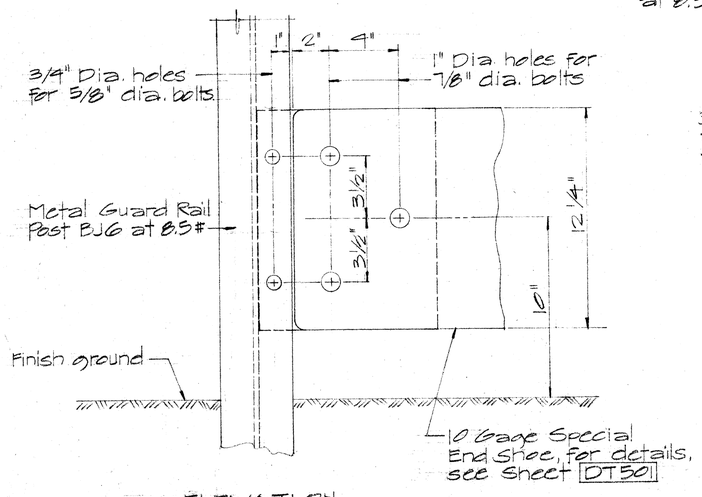

ELEVATION

DETAIL "B"

Sc. 3" = 1'-0"

NOTE:
1. All Shoe Assembly, including anchor bolts, nuts, and washers, shall be galvanized.

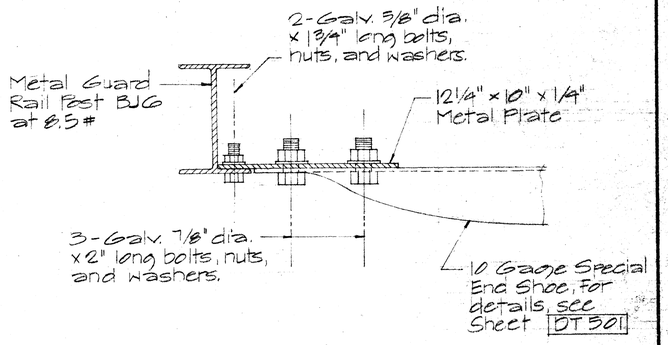

PLAN

STATE OF HAWAII
DEPARTMENT OF TRANSPORTATION
HIGHWAYS DIVISION

STANDARD DETAIL
GUARD RAIL
RAMP END ANCHORAGE

Scale: as Noted — August, 1968

SHEET No. DT 502 OF SHEETS

ORIGINAL PLAN	SURVEY PLOTTED BY	DATE
	DRAWN BY	
	TRACED BY	
NOTE BOOK	DESIGNED BY	
	QUANTITIES BY	
No.	CHECKED BY	

PRINTED ON NO. 1000H CLEARPRINT

(1) 339 S-3

FED. ROAD DIST. NO.	STATE	FED. AID PROJ. NO.	FISCAL YEAR	SHEET NO.	TOTAL SHEETS
HAWAII	HAW.	I-H-1(37) UNIT 1	1967	40	192

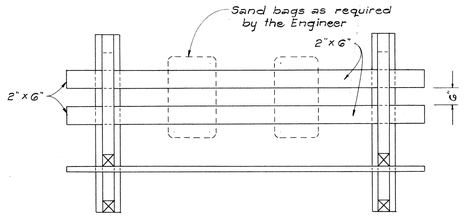

PLAN VIEW

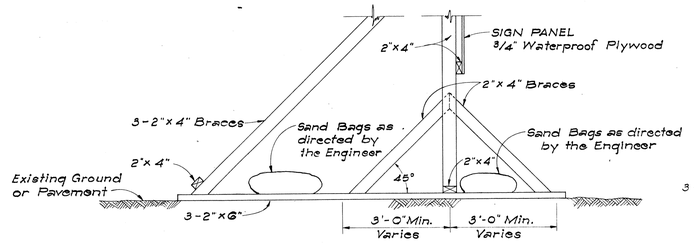

SIDE VIEW

(SIGN FRAME WEIGHTED DOWN)

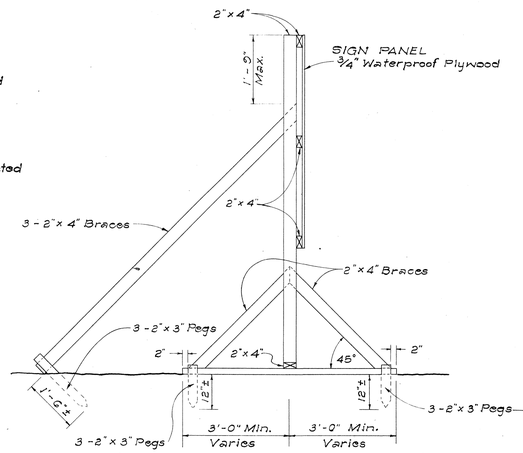

SIDE VIEW

(SIGN FRAME ANCHORED IN GROUND)

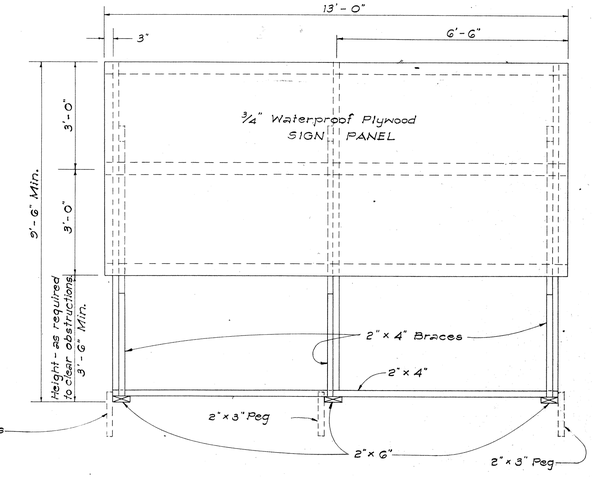

FRONT VIEW

ELEVATIONS

Scale: 1/2" = 1'-0"

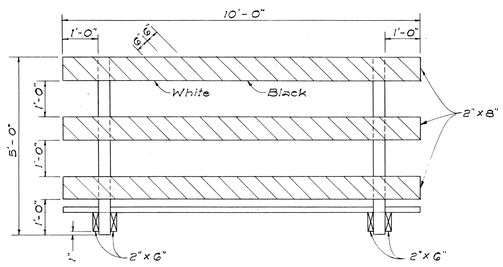

FRONT VIEW

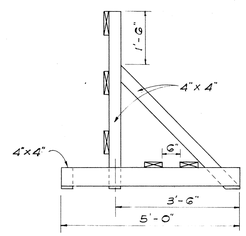

END VIEW

CLASS I BARRICADE

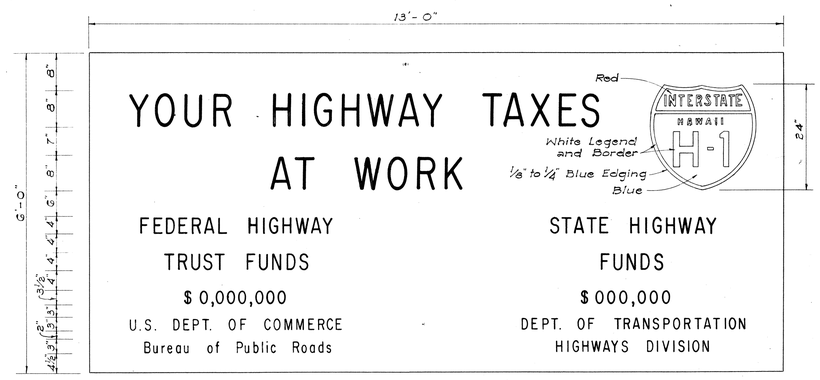

SIGN PANEL

Scale: 3/4" = 1'-0"

INTERSTATE SYSTEM CONSTRUCTION IDENTIFICATION SIGN

Scale: As Shown

NOTES:

A. CONSTRUCTION IDENTIFICATION SIGNS

1. The sign legend shall be black on white background except for the Interstate Route marker which shall be as shown on the plan.
2. The Contractor shall construct, install and maintain the project signs at the locations shown on the Plans and as ordered by the Engineer.
3. The signs shall be removed and stockpiled upon completion of the project as ordered by the Engineer and are to become State property.
4. Letters shall be Series "C" of the sizes shown on the Plan and shall conform with the "Standard Alphabet for Highway Signs", Bureau of Public Roads, 1952.
5. The Contractor shall fill in the proper numerals in place of ciphers as ordered by the Engineer.

B. WOOD BARRICADES

1. The Contractor shall construct, install and maintain the wood barricades at the locations shown on the Plans and as ordered by the Engineer.
2. The permanent wood barricades shall be left in place or relocated upon completion of the project as ordered by the Engineer and are to become State property.

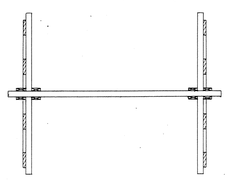

PLAN VIEW

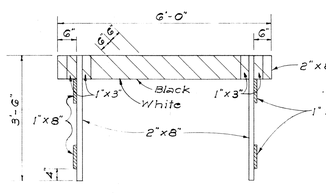

FRONT VIEW

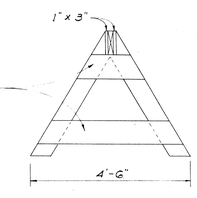

END VIEW

CLASS II BARRICADE

Scale: 1/2" = 1'-0"

ORIGINAL PLAN	SURVEY PLOTTED BY	DATE
	DRAWN BY	"
	TRACED BY	"
NOTE BOOK	DESIGNED BY	"
	QUANTITIES BY	"
No.	CHECKED BY	"

STATE OF HAWAII
DEPARTMENT OF TRANSPORTATION
HIGHWAYS DIVISION

TYPICAL DETAILS
CONSTRUCTION IDENTIFICATION SIGN
AND
WOOD BARRICADES

SCALE: As Shown DATE: May, 1966

SHEET No. 10 OF 10 SHEETS