FED. ROAD DIST. NO.	STATE	FED. AID PROJ. NO.	FISCAL YEAR	SHEET NO.	TOTAL SHEETS
HAWAII	HAW.	I-H1-1(6) UNIT 2	1966	77	203

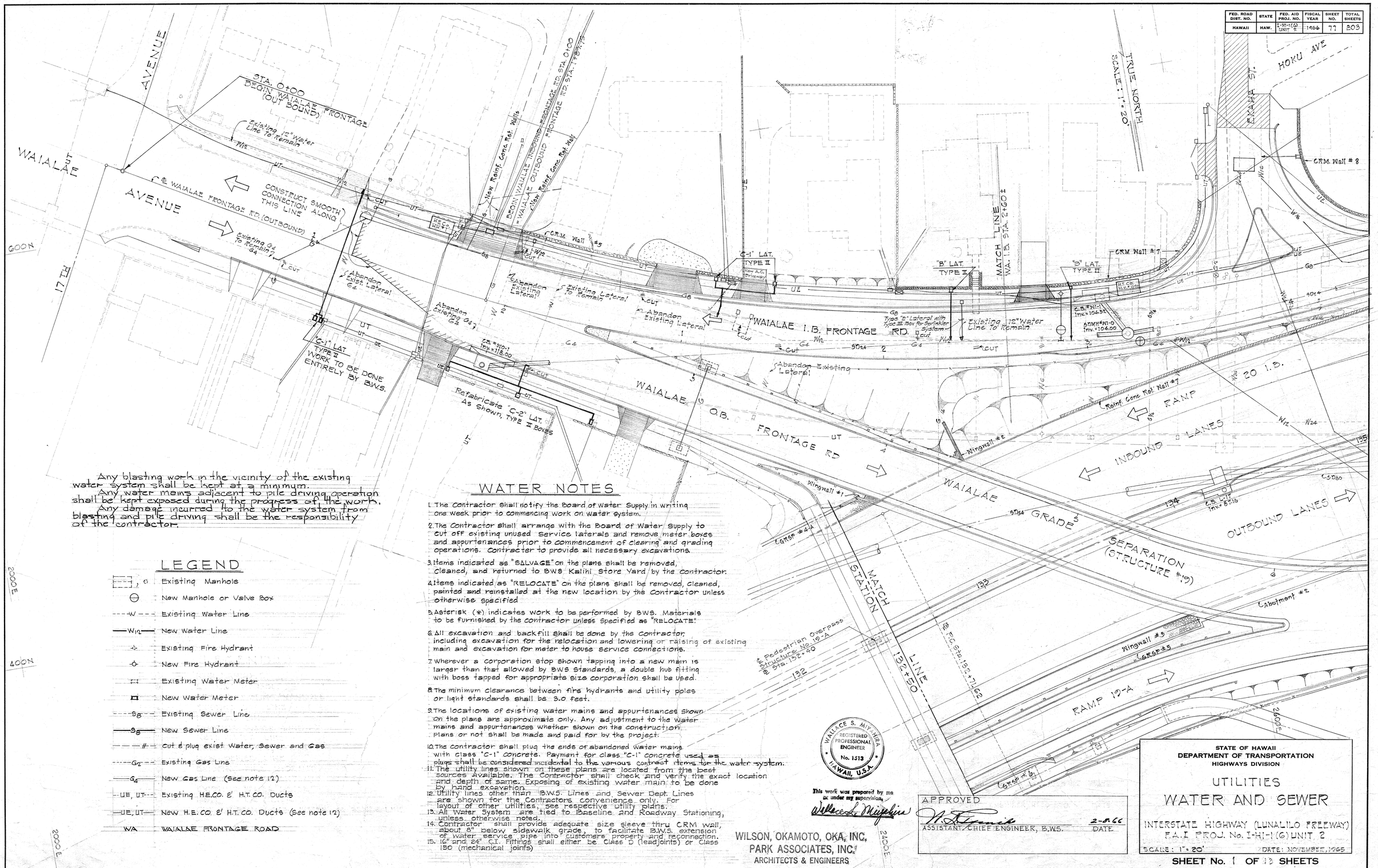

Any blasting work in the vicinity of the existing water system shall be kept at a minimum.
Any water mains adjacent to pile driving operation shall be kept exposed during the progress of the work.
Any damage incurred to the water system from blasting and pile driving shall be the responsibility of the contractor.

LEGEND

- Existing Manhole
- New Manhole or Valve Box
- Existing Water Line
- New Water Line
- Existing Fire Hydrant
- New Fire Hydrant
- Existing Water Meter
- New Water Meter
- Existing Sewer Line
- New Sewer Line
- Cut & plug exist Water, Sewer and Gas
- Existing Gas Line
- New Gas Line (See note 12)
- Existing H.E.CO. & H.T.CO. Ducts
- New H.E.CO. & H.T.CO. Ducts (See note 12)
- WA WAIALAE FRONTAGE ROAD

WATER NOTES

1. The Contractor shall notify the Board of Water Supply in writing one week prior to commencing work on water system.
2. The Contractor shall arrange with the Board of Water Supply to cut off existing unused service laterals and remove meter boxes and appurtenances prior to commencement of clearing and grading operations. Contractor to provide all necessary excavations.
3. Items indicated as "SALVAGE" on the plans shall be removed, cleaned, and returned to BWS Kalihi Store Yard by the contractor.
4. Items indicated as "RELOCATE" on the plans shall be removed, cleaned, painted and reinstalled at the new location by the Contractor unless otherwise specified.
5. Asterisk (*) indicates work to be performed by BWS. Materials to be furnished by the contractor unless specified as "RELOCATE".
6. All excavation and backfill shall be done by the contractor, including excavation for the relocation and lowering or raising of existing main and excavation for meter to house service connections.
7. Wherever a corporation stop shown tapping into a new main is larger than that allowed by BWS Standards, a double hub fitting with boss tapped for appropriate size corporation shall be used.
8. The minimum clearance between fire hydrants and utility poles or light standards shall be 3.0 feet.
9. The locations of existing water mains and appurtenances shown on the plans are approximate only. Any adjustment to the water mains and appurtenances whether shown on the construction plans or not shall be made and paid for by the project.
10. The contractor shall plug the ends of abandoned water mains with Class "C-1" concrete. Payment for class "C-1" concrete used as plugs shall be considered incidental to the various contract items for the water system.
11. The utility lines shown on these plans are located from the best sources available. The Contractor shall check and verify the exact location and depth of same. Exposing of existing water main to be done by hand excavation.
12. Utility lines other than B.W.S. Lines and Sewer Dept. Lines are shown for the Contractors convenience only. For layout of other utilities, see respective utility plans.
13. All Water System are tied to Baseline and Roadway Stationing, unless otherwise noted.
14. Contractor shall provide adequate size sleeve thru C.R.M. wall, about 8" below sidewalk grade, to facilitate B.W.S. extension of water service pipe into customers property and reconnection.
15. 16" and 24" C.I. Fittings shall either be Class D (leadjoints) or Class 150 (mechanical joints)

WALLACE S. MIYASHIRO REGISTERED PROFESSIONAL ENGINEER No. 1513 HAWAII, U.S.A.

This work was prepared by me or under my supervision.
Wallace S. Miyashiro

WILSON, OKAMOTO, OKA, INC.
PARK ASSOCIATES, INC.
ARCHITECTS & ENGINEERS

APPROVED
N. Francis 2-8-66
ASSISTANT CHIEF ENGINEER, B.W.S. DATE

STATE OF HAWAII
DEPARTMENT OF TRANSPORTATION
HIGHWAYS DIVISION

UTILITIES
WATER AND SEWER

INTERSTATE HIGHWAY (LUNALILO FREEWAY)
F.A.I PROJ. No. I-H1-1(6) UNIT 2
SCALE: 1" = 20' DATE: NOVEMBER, 1965

SHEET No. 1 OF 12 SHEETS

ORIGINAL PLAN	SURVEY PLOTTED BY	DATE
	DRAWN BY	"
	TRACED BY	"
	TYPEWRITTEN BY	"
NOTE BOOK	QUANTITIES BY	"
No.	CHECKED BY	"

PRINTED ON CLEARPRINT 1000-H

NOTE: For Fire Hydrant Location See Inset "A" Below

FED. ROAD DIST. NO.	STATE	FED. AID PROJ. NO.	FISCAL YEAR	SHEET NO.	TOTAL SHEETS
HAWAII	HAW.	I-H1-1(6) UNIT 2	1966	78	203

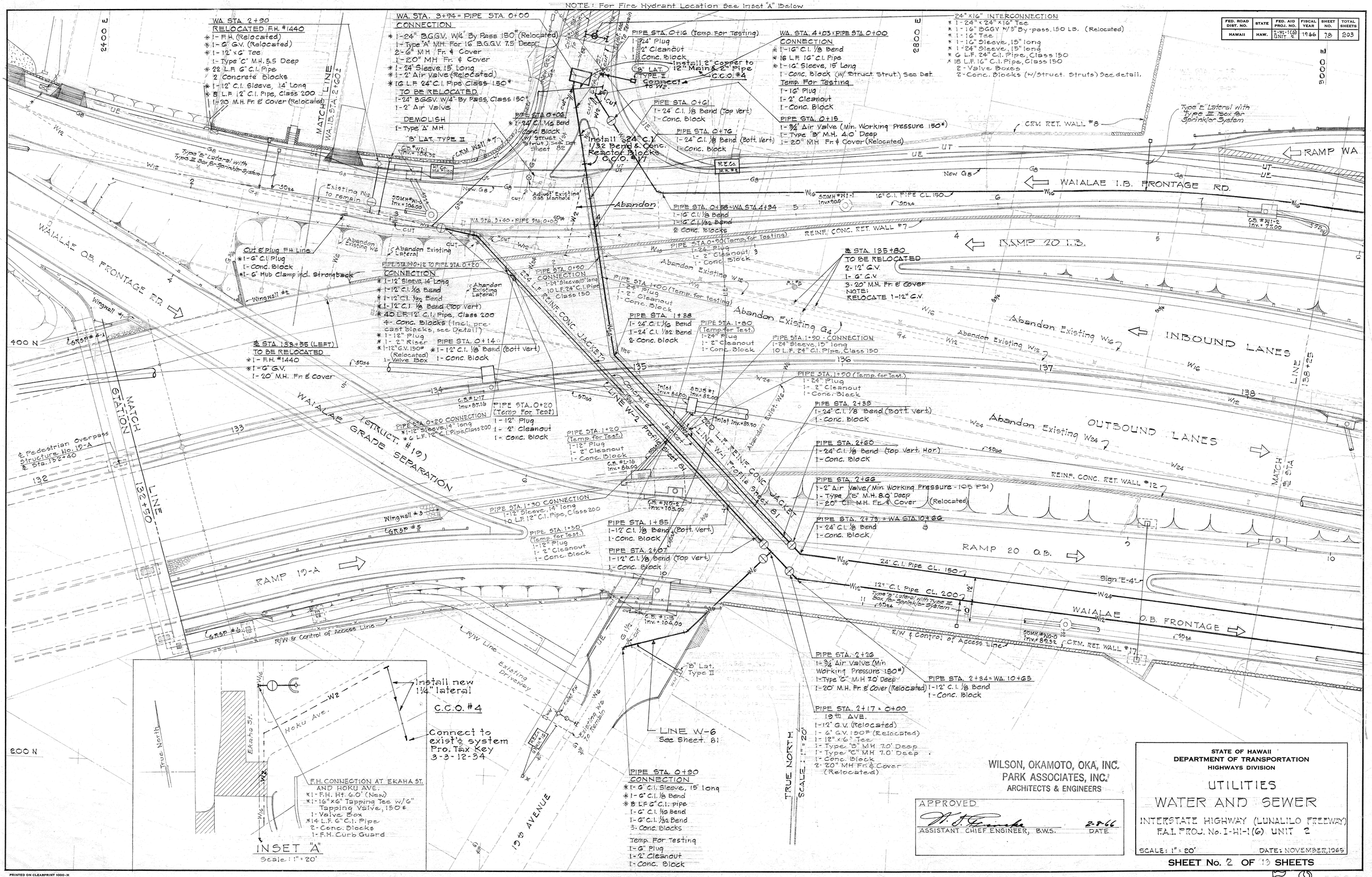

ORIGINAL PLAN	
NOTE BOOK	
No.	

	DATE
SURVEY PLOTTED BY	
DRAWN BY	" " "
TRACED BY	" " "
DESIGNED BY	" " "
QUANTITIES BY	
CHECKED BY	

WILSON, OKAMOTO, OKA, INC.
PARK ASSOCIATES, INC.
ARCHITECTS & ENGINEERS

APPROVED
ASSISTANT CHIEF ENGINEER, B.W.S. — DATE 2-8-66

STATE OF HAWAII
DEPARTMENT OF TRANSPORTATION
HIGHWAYS DIVISION

UTILITIES
WATER AND SEWER

INTERSTATE HIGHWAY (LUNALILO FREEWAY)
F.A.I. PROJ. No. I-H1-1(6) UNIT 2

SCALE: 1" = 20' — DATE: NOVEMBER, 1965

SHEET No. 2 OF 13 SHEETS

PRINTED ON CLEARPRINT 1000-H

FED. ROAD DIST. NO.	STATE	FED. AID PROJ. NO.	FISCAL YEAR	SHEET NO.	TOTAL SHEETS
HAWAII	HAW.	I-H1-1(6) UNIT 2	19 66	79	203

NOTE:
FOR SEWER NOTES
SEE SHEET NO. 80

WAIALAE
DRIVE-IN THEATER

LEGEND
Footings To Be Constructed Under This Project.
Proposed Footings.

SEWER PROFILE
SCALE: HOR. = 1" = 20'
VERT. = 1" = 8'

Construct New Brick SMH #1 Sta. (-) 0+33
Construct New Drop SMH #2 Intercept Existing 21" Line Sta. 0+00
Construct New Plain SMH #3 Sta. 0+33
Exist. Grade
S=0.00296
S=0.030
Exist. 8"
NEW 8" V.C.
INV. 51.11
INV. 50.12
Exist. 21"
S=0.003
NEW 21" V.C.
INV. 41.10
S=0.0025
Exist. 21"
INV. 41.20
0+00

Exist. S.M.H. Inv. 55.17
Exist. Sa to remain
REINF. CONC. RET. WALL #9
RAMP WA
ABUTMENT No. 3 (TO BE CONSTRUCTED)
REINF. CONC. RET. WALL #10
H.T.Co. M.H. #191
WAIALAE I.B. FRONTAGE
16" C.I. Pipe Cl. 150
Sign "E-5"
RAMP 20 I.B.
CB #L-21 Inv. = 68.00
REINF. CONC. RET. WALL #11
MATCH LINE STA. 139+25
INBOUND LANES
C.B. #L-20 Inv. = 78.48
OUTBOUND LANES
24" CMP Inlet Inv. = 76.60
C.B. #L-12 Type "S-2" Inv. = 73.67
P.T. 138+83.72
C.B. #L-18 Inv. = 85.00
Reinf. Conc. Ret. Wall No. 12
RAMP 20 O.B.
24" C.I. PIPE CL. 150
WAIALAE O.B. FRONTAGE
Type "E" Lateral with Type III Box for Sprinkler System
Inlet Inv. = 70.50
Inlet Inv. = 70.00
C.B. #WO-3 Inv. = 68.68
R/W & Control of Access Line
20th AVENUE
Existing W12 to Remain
"C-1" LAT TYPE II
Existing Sa to remain
Existing Sa to remain
Construct New Drop S.M.H. #2 Inv. = 50.12 (8')
Inv. = 41.10 (21")
Cut & Plug
Demolish Exist. S.M.H. Inv. 41.15 (21")
Inv. 50.12 (8")
Type "E" Lateral with Type III Box for Sprinkler System
Construct New Plain S.M.H. #3 Inv. = 41.20
Exist. Sanitary Sewer Easement
See Sewer Profile Above
R/W Line & Control of Access Line
"E" LAT TYPE III
EQUATION STA. FRONT = BD STA. 111+88.29 = STA. FRONT = TO STA. 97+78.03
TRUE NORTH
SCALE: 1" = 20'
(BACK) (FRONT)
Base Line
SDMH #WI-2 Inv. = 52.00
SDMH #WI-3 Inv. = 52.34
C.B. #WO-7 Inv. = 47.10
C.B. #WO-5 Inv. = 57.10
C.D.I. #1 Top = 67.00 Inv. = 63.50
C.D.I. #2 Top = 54.94 Inv. = 49.50
Change Order #16
H.T.Co. M.H. #4
NEW 30" GAS MH
LINE W-5 See Sheet No. 81
Existing W12 To Remain
CONNECT TO EXIST. Ga
Exist. Ga to Remain
AC. Roll Curb
24" C.I. PIPE CL. 150
Exist. 12" bend to remain
Reinf. Conc. Jacket for S21 C.C.O. #6
Conc. Support for duct line C.C.O. #6
Exist. S.M.H. Inv. 41.58 Adjust Frame & Cover to New Grade Reconstruct S.M.H. Wall
Existing S21 To Remain
Exist. S.M.H. Inv. 41.81 Adjust Frame & Cover to New Grade Reconstruct S.M.H. Wall
Existing S21 To Remain
21st AVENUE
Existing W12 To Remain
Exist. Sanitary Sewer Easement
MATCH LINE STA. 144+40
200 N

℄ STA. 139+35
SALVAGE
1-12" G.V.
RELOCATE
1-20" M.H. Fr. & Cover
1-16" B.G.G.V.
DEMOLISH
1-Type "A" M.H.
1-Type "B" M.H.
Abandon Exist. W12
C.B. #L-24 Inv. 18" Inlet = 73.00 Inv. 18" Outlet = 52.80
Abandon Exist. G4
Abandon Exist. W12

℄ STA. 139+78
SALVAGE
1-12" G.V.
RELOCATE
1-20" M.H. Fr. & cover
DEMOLISH
1-Type "B" M.H.
Abandon Existing W24

℄ STA. 139+14 (LEFT)
TO BE RELOCATED
1-F.H. #1471
1-6" G.V.
1-20" M.H. Fr. & Cover
DEMOLISH
Type "C" M.H.

WA. STA. 15+72
1-24" C.I. 1/8 Bend
1-Conc. Block

℄ STA. 139+63 (RIGHT)
TO BE RELOCATED
1-6" G.V.
1-20" M.H. Fr. & Cover
DEMOLISH
Type "C" M.H.
Abandon Existing H.T.Co. Duct
C.B. #L-23 Inv. = 73.49
REINF. CONC. RET. WALL #13

WA. STA. 13+65
RELOCATED F.H. #1471
1-F.H. (Relocated)
1-6" G.V. Relocated
1-12"x6" Tee
30 L.F. 6" C.I. Pipe
4-Conc. Blocks
1-Type "C" M.H. 5.0' Deep
1-6" C.I. O/S (18" Drop) B.B.
1-20" M.H. Fr. & Cover (Relocated)
1-6" 1/16 Bend

WA. STA. 13+96
CONNECTION
1-12" 1/8 Bend
1-6" G.V. (Relocated)
1-Type "C" M.H. 4.5' Deep
* 8 L.F. 6" C.I. Pipe
* 1-6" C.I. 1/16 Bend
* 1-6" C.I. Sleeve, 15" Long
1-20" M.H. Fr. & Cover (Relocated)
2-Conc. Blocks
1-12"x6" Reducer S.E.D.
Temp. For Testing
1-6" Plug
1-Conc. Block
1-2" Cleanout

℄ STA. 142+80
TO BE RELOCATED
1-F.H. #1470
1-6" G.V.
1-16" BGGV/3" By-Pass
1-20" M.H. Frame & Cover
DEMOLISH
1-Type "C" M.H.
1-Type "A" M.H.

WA. STA. 13+50 = ℄ STA. 141+45
CONNECTION
* 1-24" C.I. 1/8 Bend
* 8 L.F. 24" C.I. Pipe, Class 150
* 1-24" Sleeve, 15" Long
1-Conc. Block (w/ Struct. Strut.
Existing W24 To Remain
Temp. For Testing
1-2" Cleanout
1-24" Plug
1-Conc. Block

WA. STA. 10+50
RELOCATED F.H. #1470
1-F.H. (Relocated)
1-6" G.V. (Relocated)
16 L.F. 6" C.I. Pipe
1-16"x6" B.O. Tee
1-Type "C" M.H. 6.0' Deep
1-20" M.H. Fr. & cover (Relocated)
2-Conc. Blocks

℄ STA. 143+36
INSTALLATION OF 12" G.V.
* 1-12" G.V. (Relocated)
1-Type "B" M.H. 3.0' Deep
* 1-12" Sleeve, 14" Long
* 6 L.F. of 12" C.I. Pipe
1-20" M.H. Fr. & Cover (Relocated)

WA. STA. 10+77 = ℄ STA. 143+15
CONNECTION
* 1-16" BGGV W/ 3" By-Pass (Relocated)
1-16" C.I. 1/8 Bend
1-16" C.I. 1/16 Bend
* 8 L.F. 16" C.I. Pipe, Class 150
1-Type "A" M.H. For 16" BGGV 6.5' Deep
* 1-16" C.I. Sleeve, 15" Long
2-Conc. Blocks
1-20" C.I. M.H. Frame & Cover (Relocated)
2-6" C.I. M.H. Frame & Cover
Temp. For Testing
1-16" Plug
1-2" Cleanout
1-Conc. Block

℄ STA. 143+36 To ℄ STA. 144+26
CONNECTION TO EXISTING 12" WATER
* 1-12" 1/8 Bend
* 2-12" 1/8 Bend
* 76 L.F. 12" C.I. Pipe, Class 200
* 1-12" Sleeve, 14" Long
3-Conc. Block
TO BE RELOCATED
1-12" G.V.
2-20" M.H. Frame & Cover
SALVAGE
1-12" G.V.
DEMOLISH
2 Type "B" M.H.

℄ STA. 144+38 (RIGHT)
1-24" C.I. 1/32 Bend
1-Conc. Block

℄ STA. 143+05 to 143+45
Adjust 4 Type A WVMH Top Slab incl., Frame & Cover

℄ STA. 143+80
℄ STA. 143+90
CONNECTION
* 1-24" C.I. 1/32 Bend
* 1-24" C.I. Sleeve, 15" long
* 10 L.F. 24" C.I. Pipe
1-Conc. Block w/ struct. strut. See det. sht.
Temp. for Testing
℄ Sta. 143+90
1-24" Plug
1-2" Cleanout
1-Conc. Block

* Raise Existing 12" Water Sta. 0+46 to Sta. 1+50
* 1-12" Offset 24" Drop
* 101 L.F. 12" C.I. Pipe, Class 200
* 1-12" Sleeve, 14" long
1-Conc. Block

APPROVED
W. S. Yamada
ASSISTANT CHIEF ENGINEER, B.W.S. — DATE 2-8-66
for DIRECTOR, DIVISION OF SEWERS — DATE 2-2-65

ORIGINAL PLAN		DATE
	SURVEY PLOTTED BY	
	DRAWN BY	
	TRACED BY	
	DESIGNED BY	
NOTE BOOK	QUANTITIES BY	
No.	CHECKED BY	

WILSON, OKAMOTO, OKA, INC.
PARK ASSOCIATES, INC.
ARCHITECTS & ENGINEERS

STATE OF HAWAII
DEPARTMENT OF TRANSPORTATION
HIGHWAYS DIVISION

UTILITIES
WATER AND SEWER

INTERSTATE HIGHWAY (LUNALILO FREEWAY)
F.A.I. PROJ. No. I-H1-1 (6) UNIT 2

SCALE: 1" = 20 — DATE: NOVEMBER 1965

SHEET No. 3 OF 13 SHEETS

PRINTED ON CLEARPRINT 1000-H

FED. ROAD DIST. NO.	STATE	FED. AID PROJ. NO.	FISCAL YEAR	SHEET NO.	TOTAL SHEETS
HAWAII	HAW.	I-H1-1(G) UNIT 2	1966	80	203

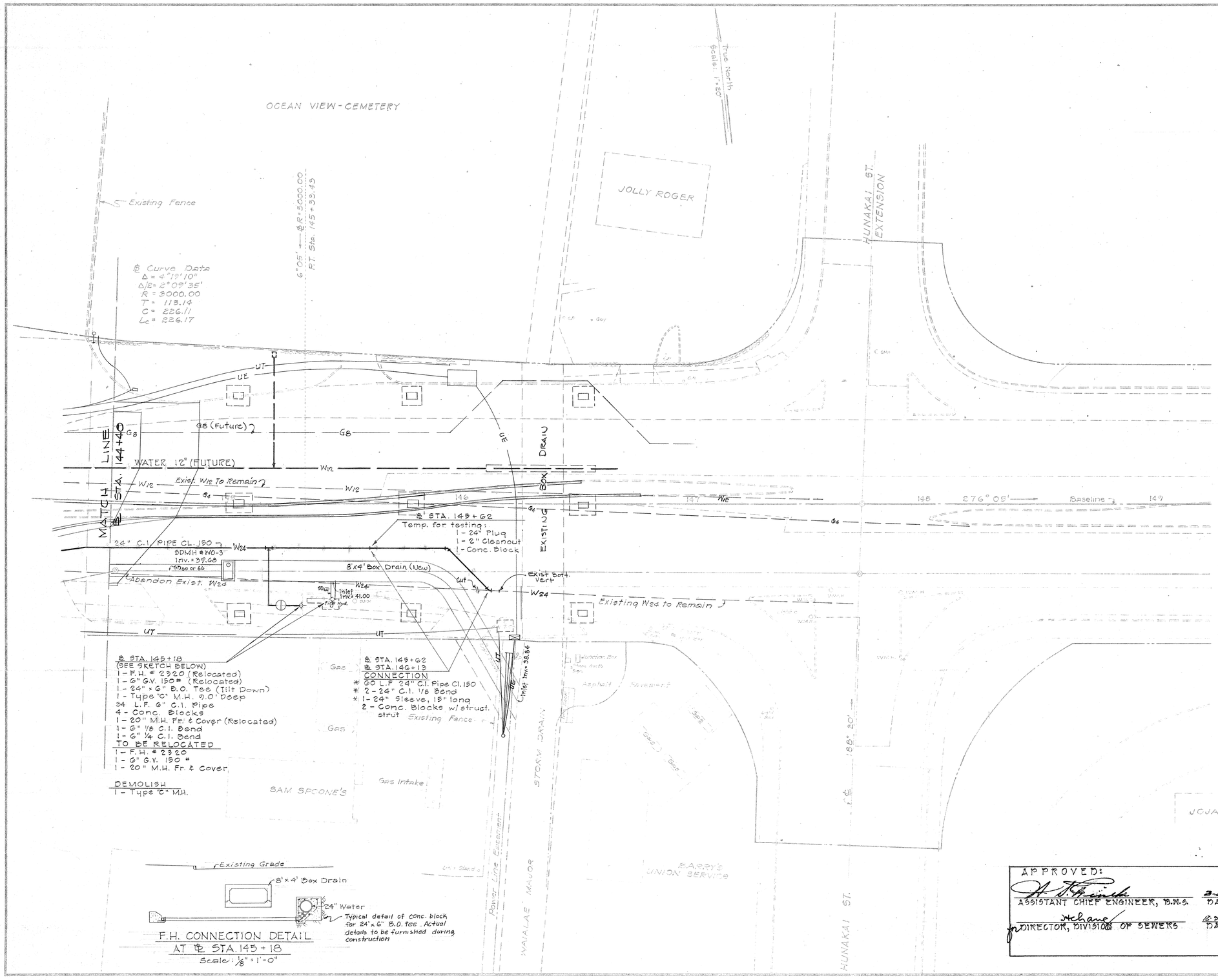

SEWER NOTES

1. Existing Sewer Lines shown on the plans are based on existing records of varying degrees of accuracy and completeness, verified wherever possible by field Surveys. The Contractor shall verify actual location and inverts of existing lines, and shall be required to make adjustment to any new or existing sewer system wherever directed by the Engineer.
2. Adjust existing sewer manholes and manhole frames and covers within proposed roadway to fit new roadway finished grades.
3. If laterals other than those shown on the plans are exposed during construction, the same shall be cut and plugged, or extended and reconnected as required.
4. All services connected to existing sewer mains which are to be abandoned or removed shall be reconnected to new sewer mains if services are required.
5. All work involved in installation of new sewer mains, connection of existing house sewers to new sewer line, construction of concrete jackets around sewer mains, extension of laterals to new property line, and cutting and plugging of abandoned sewer lines and laterals shall be performed in accordance with the latest City and County Standard Sewer Details and Specifications and under the Supervision of an Inspector or Representative of the Division of Sewers, City and County of Honolulu.
6. Concrete blocks and cradles shall be placed for all sewer mains and laterals.
7. Salvaged 21 inch diameter manhole frames and Covers may be used only for manholes at end of lines and only if the depth of manholes are 5 feet or less. All salvaged 24 inch frames and covers shall be used before 21 inch frames and covers are used.
8. All services shall be maintained at all times during construction. Alterations to service lines shall be done with the least amount of disturbance to the existing services to the various houses.
9. All trees, lawns, shrubbery, fences, etc., disturbed in the process of performing work on sewer service lines, shall be restored by the Contractor to the satisfaction of the Engineer. Such restoration work will not be paid for separately, but shall be considered as incidental to the various contract items for the Sewer System.
10. Contractor shall notify the Divison of Sewers two (2) days prior to commencement of sewer work.

ORIGINAL PLAN	SURVEY PLOTTED BY	DATE
	DRAWN BY	
	TRACED BY	
NOTE BOOK	DESIGNED BY	
	QUANTITIES BY	
NO.	CHECKED BY	

APPROVED:

ASSISTANT CHIEF ENGINEER, B.W.S. — DATE 2-8-66

for DIRECTOR, DIVISION OF SEWERS — DATE 12-3-65

STATE OF HAWAII
DEPARTMENT OF TRANSPORTATION
HIGHWAYS DIVISION

UTILITIES
WATER AND SEWER

INTERSTATE HIGHWAY (LUNALILO FREEWAY)
F.A.I. PROJ. NO. I-H1-1(G) UNIT 2

SCALE: 1" = 20' DATE: NOVEMBER 1965

SHEET No. 4 OF 13 SHEETS

S 0

FED. ROAD DIST. NO.	STATE	FED. AID PROJ. NO.	FISCAL YEAR	SHEET No.	TOTAL SHEETS
HAWAII	HAW	(H) I-1-1(6) UNIT 2	1966	B1	803

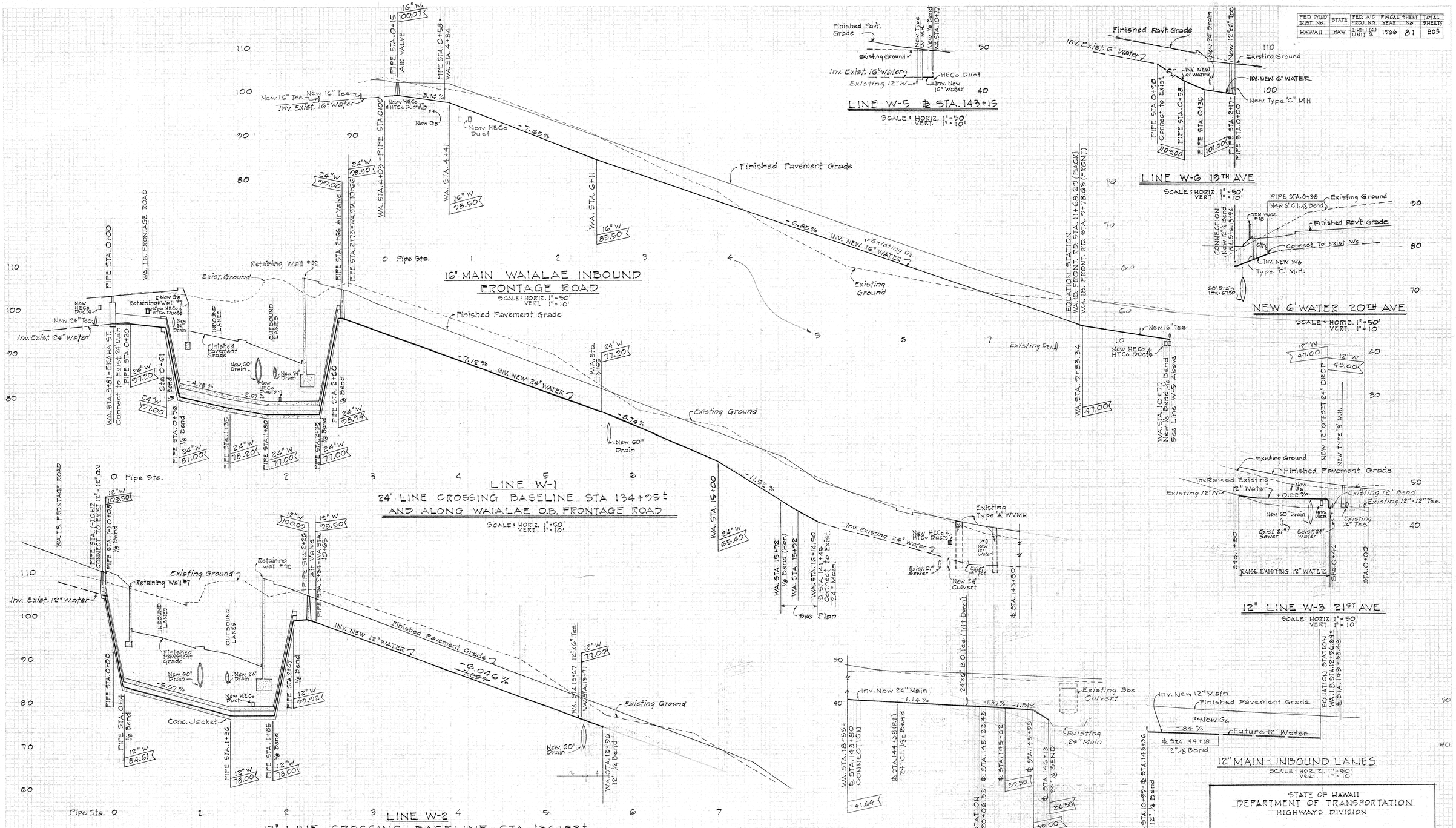

APPROVED:

H. S. Fenicle
ASSISTANT CHIEF ENGINEER B.W.S.

2-8-66
DATE

STATE OF HAWAII
DEPARTMENT OF TRANSPORTATION
HIGHWAYS DIVISION

UTILITIES

PROFILE OF WATER SYSTEM

INTERSTATE HIGHWAY (LUNALILO FREEWAY)
F.A.I. PROJECT NO. I-HI-1(6) UNIT 2

SCALE: AS SHOWN DATE: NOVEMBER, 1965

SHEET No. 5 OF 13 SHEETS

S1

FED. ROAD DIST. NO.	STATE	FED. AID PROJ. NO.	FISCAL YEAR	SHEET NO.	TOTAL SHEETS
HAWAII	HAW.	I-H1-1(6) Unit 2	1966	82	209

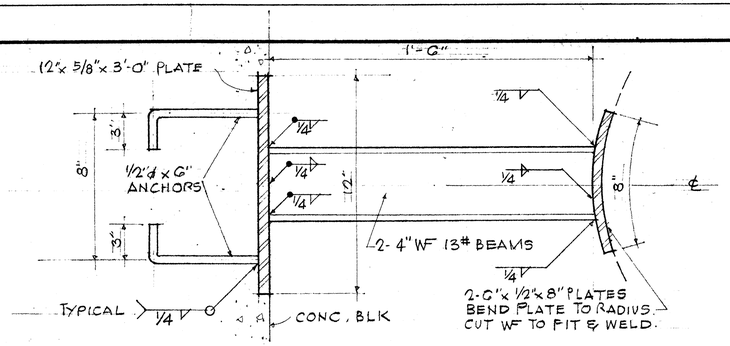

BEAM DETAIL SCALE: 3" = 1'-0"

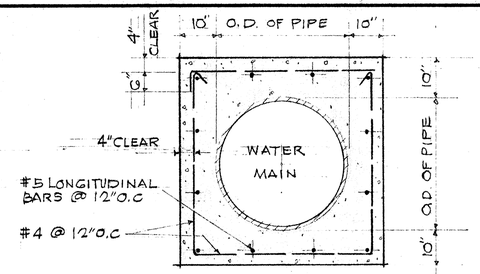

SECTION "C-C"

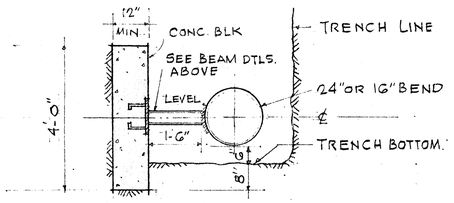

SECTION A 107/107
SCALE: 1/2" = 1'-0"

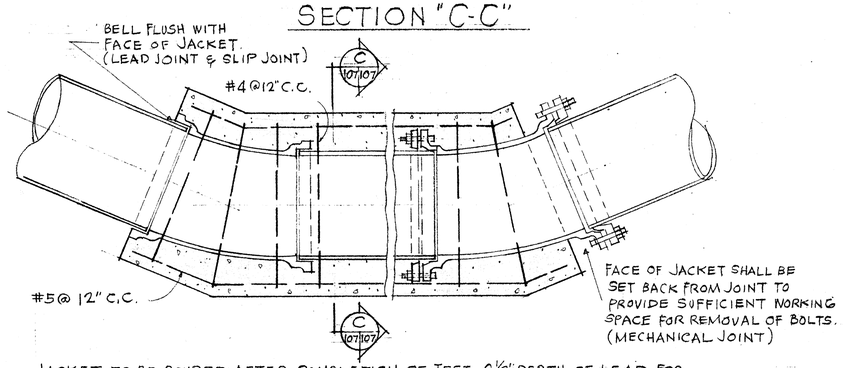

JACKET TO BE POURED AFTER COMPLETION OF TEST. 2 1/2" DEPTH OF LEAD FOR LEAD JOINT PIPE REQUIRED AT ALL EMBEDDED JOINTS. WHEREVER CONSTRUCTION JOINTS ARE REQUIRED 6" RUBBER OR NEOPRENE WATERSTOPS SHALL BE INSTALLED WATERSTOP SHALL BE OF THE TYPE SPECIFIED AND MANUFACTURED BY THE SERVICIZED PRODUCTS CORP., GATE RUBBER CO. OR APPROVED EQUAL.

REINFORCED CONCRETE JACKET

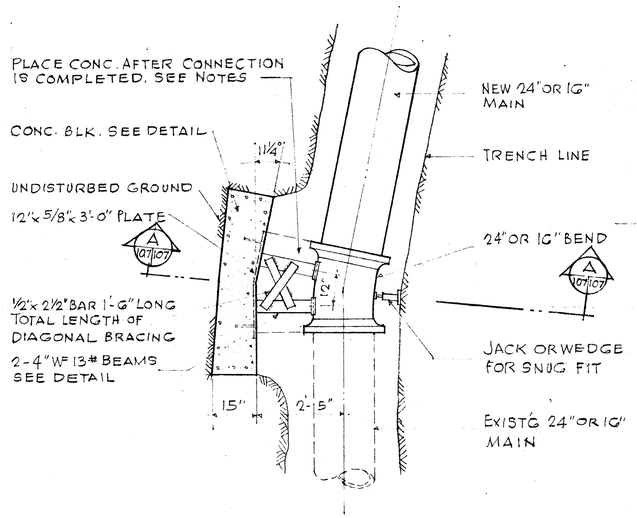

PLAN SCALE: 1/2" = 1'-0"

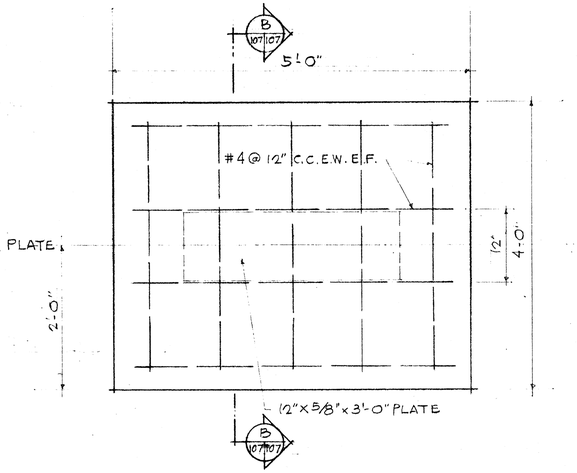

ELEVATION

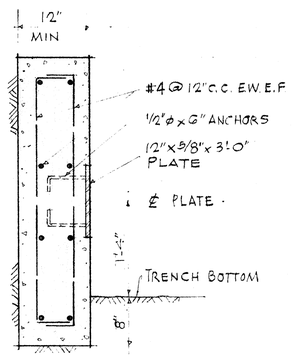

SECTION B 107/107

DETAILS OF CONCRETE BLOCK

SCALE: 1" = 1'-0"

NOTES:

1. MINIMUM COVER OVER REINFORCING SHALL BE 3".
2. CONCRETE SHALL BE CLASS "B-1" 2500 P.S.I.
3. APPROX CONCRETE YARDAGE OF BLK @ 0.93 C.Y.
4. DOTTED AREA TO BE FILLED WITH CONC. AFTER CONNECTION IS COMPLETED.

DETAILS-CONCRETE BLOCK WITH STRUCTURAL STRUT. (FOR BENDS AT CONNECTIONS) ALSO: 24" & 16" TEE CONNECTIONS

WILSON, OKAMOTO, OKA, INC.
PARK ASSOCIATES, INC.
ARCHITECTS & ENGINEERS

APPROVED

W. F. Fumich 2-8-66
ASSISTANT CHIEF ENGINEER, B.W.S. DATE

STATE OF HAWAII
DEPARTMENT OF TRANSPORTATION
HIGHWAYS DIVISION

UTILITIES

SPECIAL WATER DETAILS

INTERSTATE HIGHWAY (LUNALILO FREEWAY)
F.A.I. PROJ. NO. I-H1-1(6) UNIT 2

SCALE: AS SHOWN DATE: NOVEMBER, 1965

SHEET No. 6 OF 13 SHEETS

ORIGINAL PLAN	SURVEY PLOTTED BY	DATE
	DRAWN BY	
	TRACED BY	
NOTE BOOK	DESIGNED BY	
No.	QUANTITIES BY	
	CHECKED BY	

PRINTED ON NO. 1000H CLEARPRINT

FED. ROAD DIST. NO.	STATE	FED. AID PROJ. NO.	FISCAL YEAR	SHEET NO.	TOTAL SHEETS
HAWAII	HAW.	I-HI-1(6) Unit 2	1966	83	203

NOT IN CONTRACT

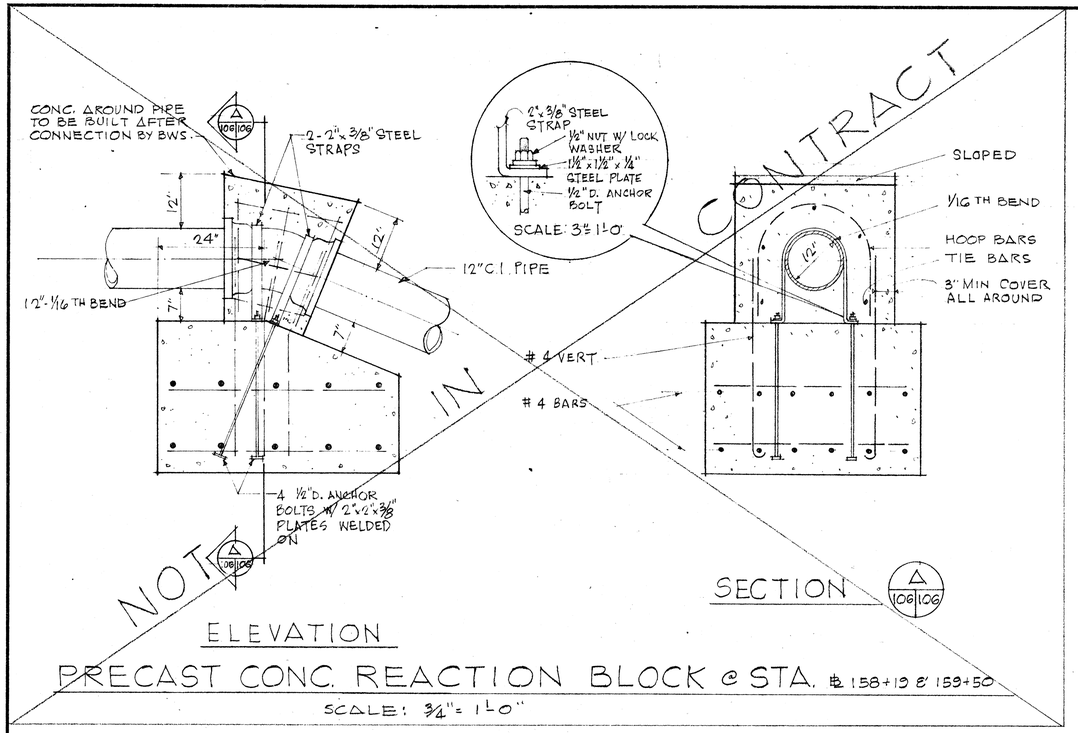

ELEVATION

PRECAST CONC. REACTION BLOCK @ STA. ℄ 158+19 & 159+50

SCALE: 3/4"= 1'-0"

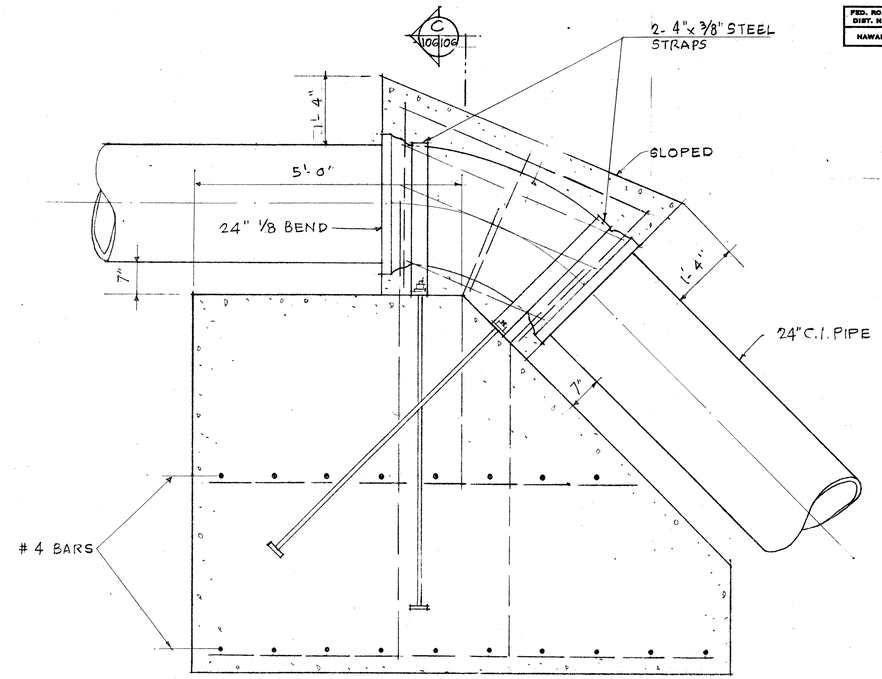

ELEVATION

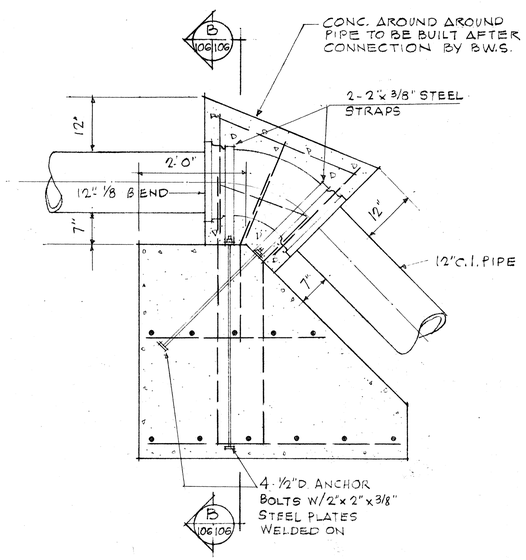

ELEVATION

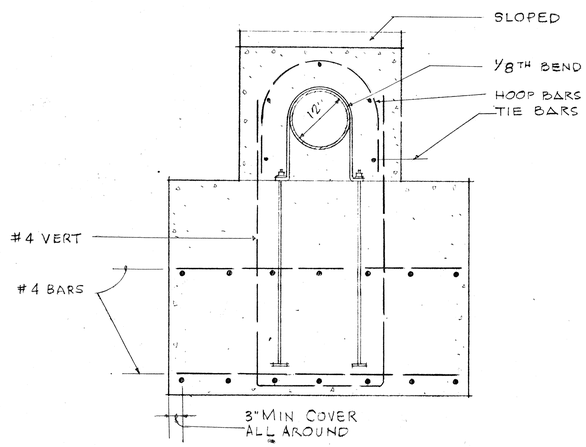

SECTION B 106 106

PRECAST CONC. REACTION BLOCK @ STA. PIPE 0+04 = WA1B 3+28±

SCALE: 3/4"= 1'-0"

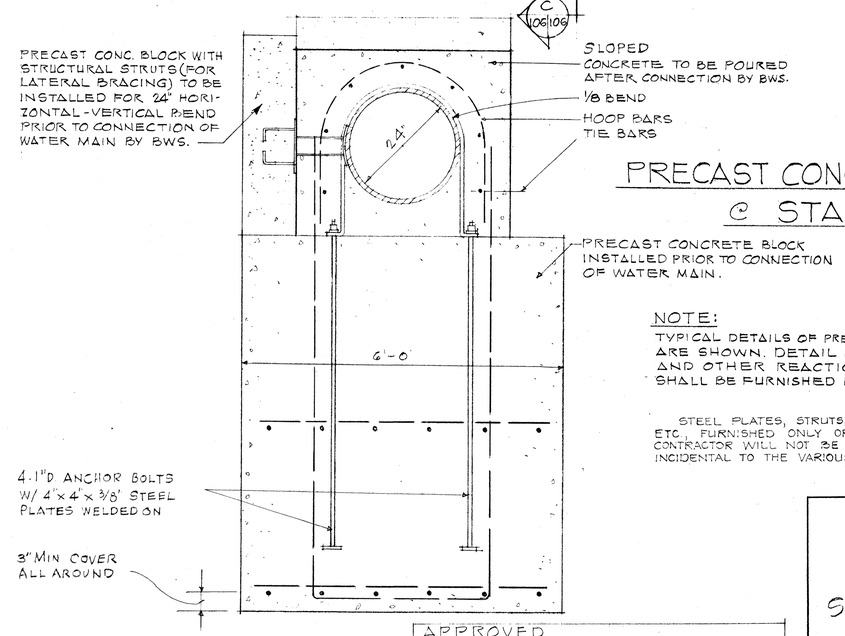

PRECAST CONC. REACTION BLOCK @ STA. ℄ 146+13

NOTE:

TYPICAL DETAILS OF PRECAST CONCRETE REACTION BLOCKS ARE SHOWN. DETAIL DRAWINGS OF ACTUAL PRECAST BLOCKS AND OTHER REACTION BLOCKS (NOT PRECAST) TO BE USED, SHALL BE FURNISHED DURING CONSTRUCTION.

STEEL PLATES, STRUTS, AND STRAPS, ANCHOR BOLTS, NUTS, WASHERS, ETC., FURNISHED ONLY OR FURNISHED AND INSTALLED BY THE CONTRACTOR WILL NOT BE PAID FOR DIRECTLY, BUT SHALL BE CONSIDERED INCIDENTAL TO THE VARIOUS CONTRACT ITEMS FOR THE WATER SYSTEM.

WILSON, OKAMOTO, OKA, INC.
PARK ASSOCIATES, INC.
ARCHITECTS & ENGINEERS

SECT. C 106 106
SC: 3/4"= 1'-0"

APPROVED
ASSISTANT CHIEF ENGINEER, BWS — DATE 2-8-66

STATE OF HAWAII
DEPARTMENT OF TRANSPORTATION
HIGHWAYS DIVISION

UTILITIES

SPECIAL WATER DETAILS

INTERSTATE HIGHWAY (LUNALILO FREEWAY)
FAI PROJ. NO. I-HI-1(6) UNIT 2

SCALE: 3/4"=1'-0" — DATE: NOVEMBER, 1965

SHEET No. 7 OF 13 SHEETS

ORIGINAL PLAN	SURVEY PLOTTED BY	DATE
	DRAWN BY	
	TRACED BY	
NOTE BOOK	DESIGNED BY	
	QUANTITIES BY	
No.	CHECKED BY	

PRINTED ON NO. 1000H CLEARPRINT

S 3

FED AID DIST NO	STATE	FED AID PROJ NO	FISCAL YEAR	SHEET NO	TOTAL SHEETS
HAWAII	HAWAII	I-H1-1(6) Unit 2	1966	84	209

NOTE:
Contractor to furnish 1 1/2" brass plug (Tapered thread) to replace corporation stop upon completion of chlorination.

TOP VIEW

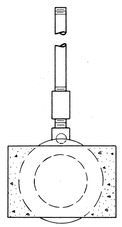

END VIEW

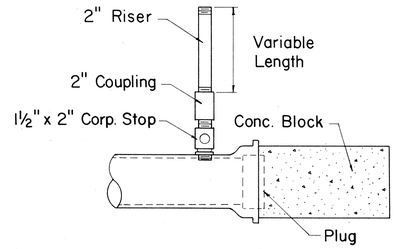

SIDE VIEW

DETAIL OF TEMPORARY 2" CLEANOUT

Not to Scale

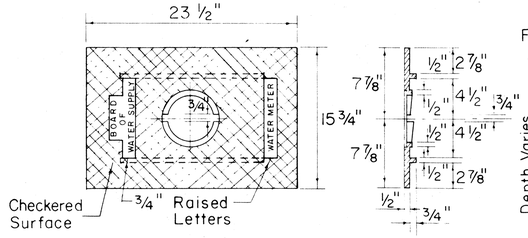

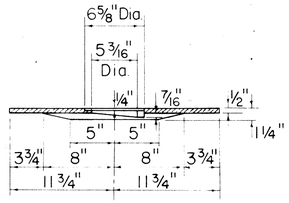

COVER PLATE

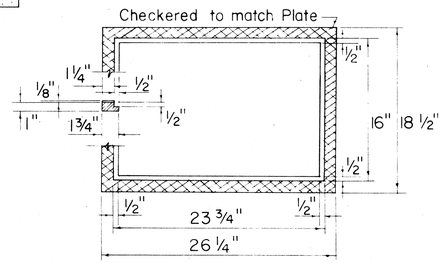

FRAME

CAST IRON FRAME AND PLATE TYPE II

Scale: 1 1/2" = 1'-0"

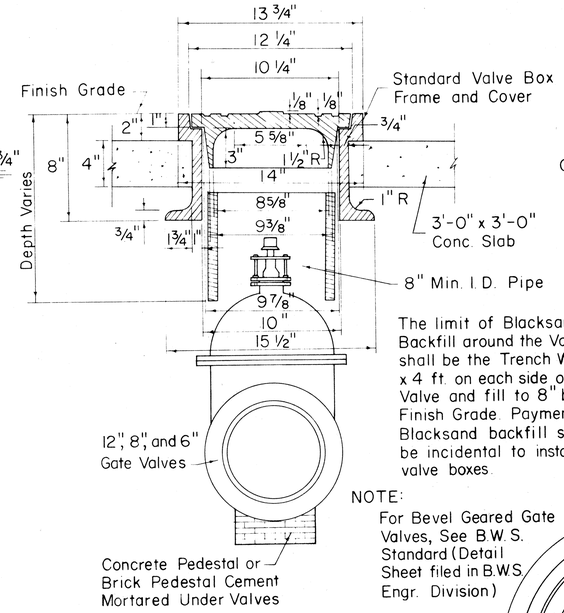

The limit of Blacksand Backfill around the Valve shall be the Trench Width x 4 ft. on each side of Valve and fill to 8" below Finish Grade. Payment for Blacksand backfill shall be incidental to installing valve boxes.

NOTE:
For Bevel Geared Gate Valves, See B.W.S. Standard (Detail Sheet filed in B.W.S. Engr. Division)

INSTALLATION OF VALVE BOX FOR GATE VALVES

Not to Scale

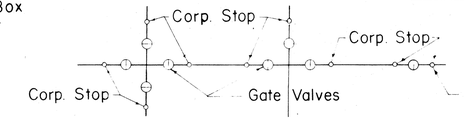

Size of one Corp. Stop given in Table "A". Extra Corp. Stop required at valves located on the "run" shall be 1" x 1 1/4" for all sizes of pipes and shall be installed as directed by the Engineer.

CORP. STOP LAYOUT

Not to Scale

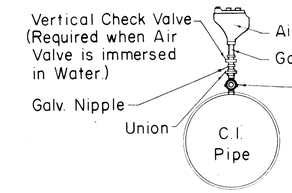

For 3/4" Air Valve - 3/4" x 1" Corp. Stop w/Bushing
For 2" Air Valve - 1 1/2" x 2" Corporation Stop

For Vertical Check Valve Fig. 490 from Kennedy Valve Mfg. Co., Cat. No. 78, or Fig. 24, from Crane Co., Cat. No. 53 or approved equal.

DETAIL OF CONNECTION FOR AIR ELIMINATING TRAP

Not to Scale

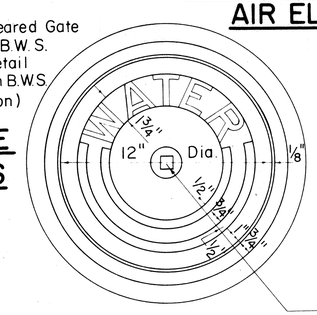

Offset word "WATER" 1 3/4" high, 1/8" deep

NOTE:
All castings shall be made accurately to the dimensions shown. Seat and Cover shall be ground where necessary to secure flat and true surfaces. The Cover shall not rattle in any position.

Minor changes in dimensions may be made to suit foundry conditions provided such changes are approved by the Board of Water Supply.

3/4" Sq. Hole with 1/2" wide ridge

CAST IRON FRAME AND COVER

Scale: 3" = 1'-0"

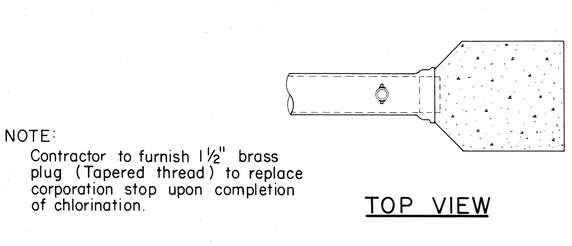

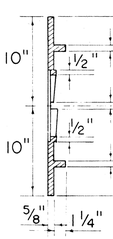

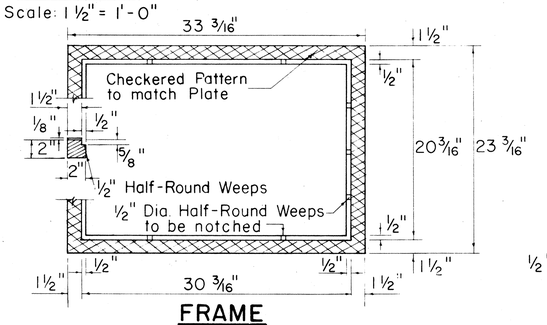

FRAME

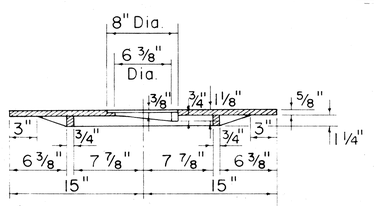

COVER PLATE

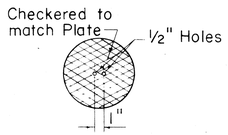

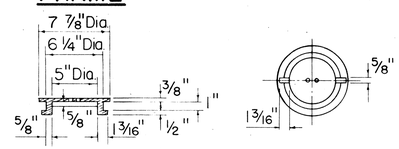

READING COVER

CAST IRON FRAME, PLATE AND COVER TYPE III

Scale: 1 1/2" = 1'-0"

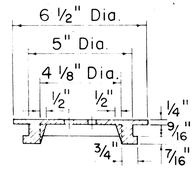

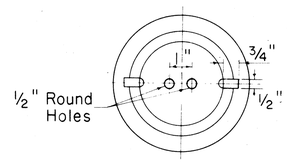

READING COVER

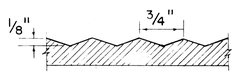

CHECKERED PATTERN

CAST IRON COVER FOR TYPE II FRAME

Not to Scale

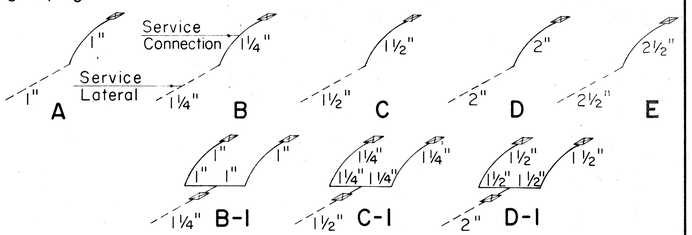

TYPICAL LAYOUT OF SERVICE LATERALS AND CONNECTIONS

Not to Scale

APPROVED:

ASSISTANT CHIEF ENGINEER
BOARD OF WATER SUPPLY

DATE 2-8-66

WILSON, OKAMOTO, OKA, INC.
PARK ASSOCIATES, INC.
ARCHITECTS & ENGINEERS

STATE OF HAWAII
DEPARTMENT OF TRANSPORTATION
HIGHWAYS DIVISION
BOARD OF WATER SUPPLY
CITY & COUNTY OF HONOLULU

STANDARD DETAILS

INTERSTATE HIGHWAY (LUNALILO FRWY)
F.A.I. PROJ. NO. I-H1-1(6) UNIT 2
Scale As Noted
Date NOVEMBER, 1965

SHEET NO. 8 OF 13 SHEETS

S 4

FED. AID DIST. NO.	STATE	FED. AID PROJ. NO.	FISCAL YEAR	SHEET NO.	TOTAL SHEETS
HAWAII	HAWAII	I-HI-1(6) Unit 2	1966	85	209

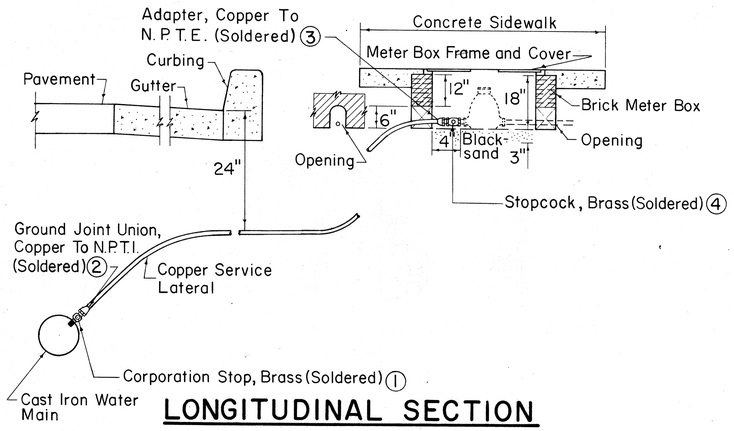

LONGITUDINAL SECTION

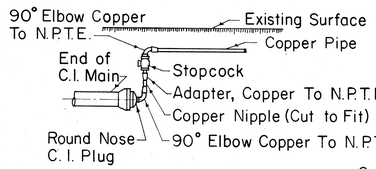

SOLDERED JOINT

SERVICE LATERAL CONNECTION AT END OF LINE

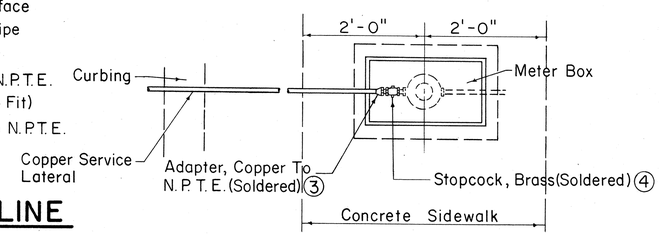

SINGLE SERVICE CONNECTION

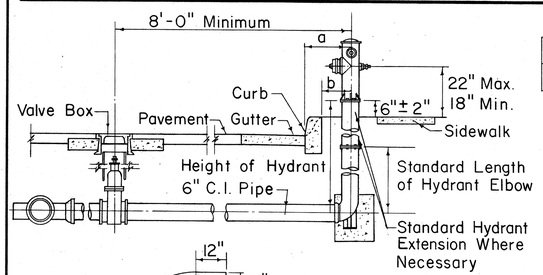

a	20" Min. (Standard Curb)
b	20" Min. (Roll Curb)

NOTE:

Gaskets for flanged joints shall be 1/16 inch duck-inserted rubber packing Garlock No. 19.

Bolts shall be 5/8" diameter x 2 3/4" long steel machine bolts with cut threads, American Standard heavy hexagon heads, galvanized.

Nuts shall be American Standard heavy cold punched hexagon nuts, galvanized.

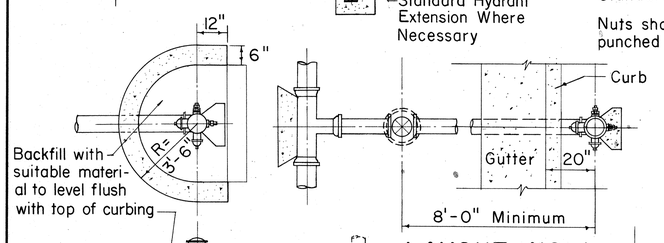

LAYOUT NO. 1

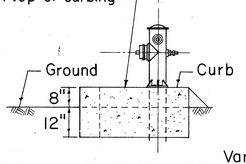

DETAIL OF CURBING AT HYDRANT WHERE REQUIRED

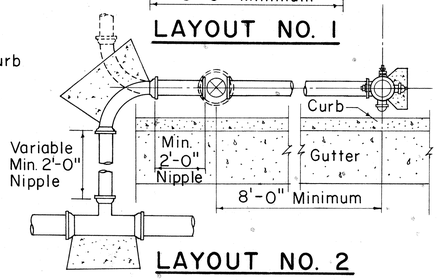

LAYOUT NO. 2

STANDARD LENGTHS FOR HYDRANT ELBOWS
30"
36"
42"
48"

Standard Hydrant Extensions are available in the following Lengths:

6 to 30 inches long in in increments of 6 inches

STANDARD FIRE HYDRANT LAYOUT

TYPE "A" METER BOX

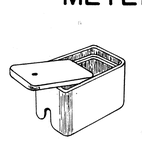

TYPE "B" METER BOX

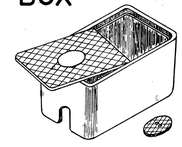

TYPE "X" METER BOX

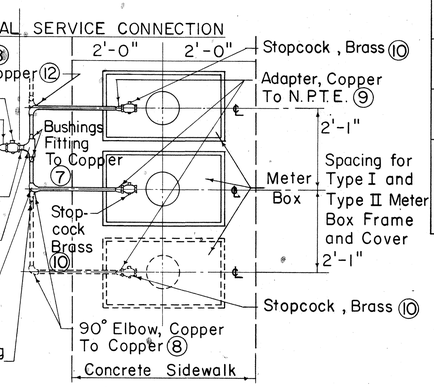

MULTIPLE SERVICE CONNECTION
SOLDERED JOINTS

SCHEDULE OF COPPER FITTINGS
(SOLDERED JOINT)

ITEM NO.	DESCRIPTION	SINGLE SERVICE CONN.	MULTIPLE SERV. CONN. TWO SERVICES	MULTIPLE SERV. CONN. THREE SERVICES
1	Corporation Stop Brass (H-10003)	1	1	1
2	Ground Joint Union (Style Copper To N.P.T.E. No. C-109)	1	1	1
3	Adapter, Copper To N.P.T.E. (Style No. C-101)	2	1	1
4	Stopcock Brass (B.W.S Standard)	1	1	1
5	Fitting Adapter, (Style Fitting To N.P.T.E. No. C-104)	—	1	1
6	Tee, Copper To Copper To Copper (Style No. T-300)	—	1	1
7	Bushings, Fitting To Copper (Style No. C-103)	—	2	2
8	90° Elbow, Copper To Copper (Style No. C-200)	—	2	2
9	Adapter, Copper To N.P.T.E. (Style No. C-101)	1	2	3
10	Stopcock Brass (B.W.S. Standard)	1	2	3
11	Reducing Tee, Copper To Copper To Copper (Substitute For Items Number 6 and 7). (Style No. T-300)	—	1	1
12	Tee, Copper To Copper To Copper (Style No. T-300)	—	—	1
13	Bushing, Fitting To Copper (Style No. C-103)	—	—	1
14	Reducing Tee, Copper To Copper To Copper (Substitute For Items Number 12 and 13 (Style No. T-300)	—	—	1

NOTE:

Reference Numbers shown thus (H-10003) are from Mueller Co. Catalog "H" and (Style No. T-300) are from Mueller Brass Co. "Streamline" Catalog S-354. Approved Equal may be used.

METER BOX DATA					
TYPE METER BOX	METER SIZES	OVERALL DIMENSIONS AT BOTTOM	OVERALL DIMENSIONS AT TOP	COMPLETE WEIGHT	OVERALL DIMENSIONS OF LID
A	5/8" or 3/4" Without Valve	7 1/4" x 7 1/4"	10" x 10"	45 lbs.	7 3/8" Dia.
B	5/8" or 3/4"	9 1/2" x 16"	12 1/4" x 18 3/8"	82 lbs.	8 3/4" x 14 1/2"
X		14 1/2" x 23 1/2"	16" x 25"	143 lbs.	13 1/8" x 22 1/8"

APPROVED:

A. Fukunaga 2-8-66
ASSISTANT CHIEF ENGINEER DATE
BOARD OF WATER SUPPLY

WILSON, OKAMOTO, OKA, INC.
PARK ASSOCIATES, INC.
ARCHITECTS & ENGINEERS

STATE OF HAWAII
DEPARTMENT OF TRANSPORTATION
HIGHWAYS DIVISION
BOARD OF WATER SUPPLY
CITY & COUNTY OF HONOLULU

STANDARD DETAILS

INTERSTATE HIGHWAY (LUNALILO FRWY)
F.A.I. PROJ. NO. I-HI-1(6) UNIT 2

Not to Scale Date: NOVEMBER, 1965

SHEET NO. 9 OF 13 SHEETS

S5

LIETZ 1103 ARKWRIGHT TRACING CLOTH 10-60 200P

FED. AID DIST. NO.	STATE	FED. AID PROJ. NO.	FISCAL YEAR	SHEET NO.	TOTAL SHEETS
HAWAII	HAWAII	I-HI-1(6) unit 2	1966	86	209

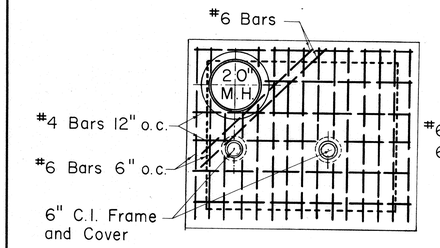

PLAN OF TOP SLAB

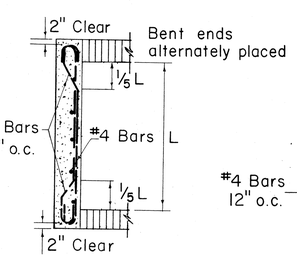

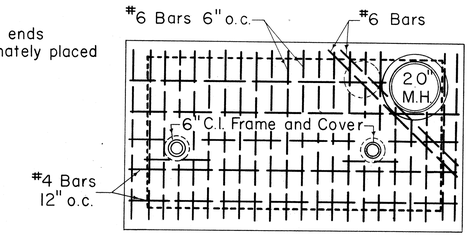

PLAN OF TOP SLAB

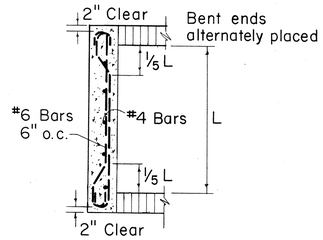

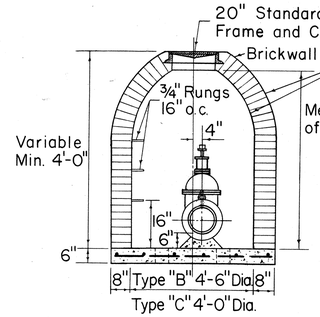

SECTION A-A

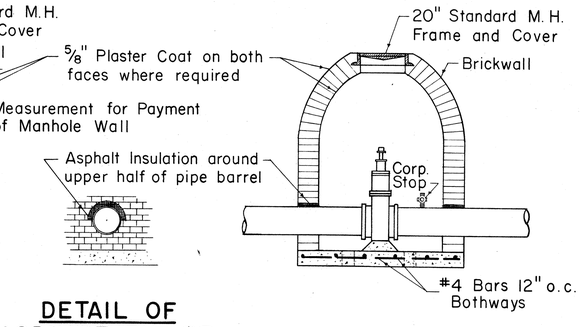

DETAIL OF ASPHALT FILLER

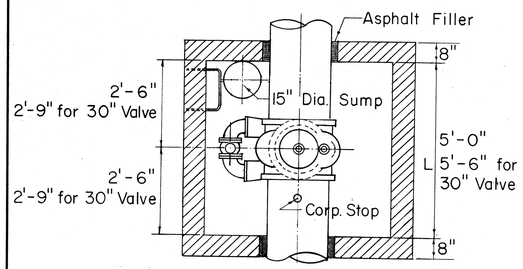

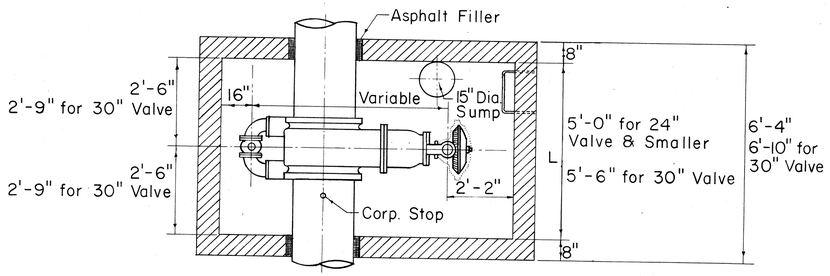

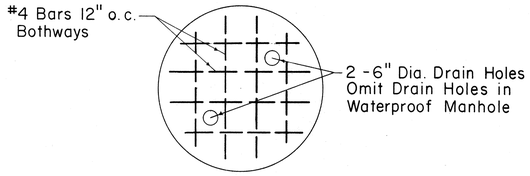

STEEL DETAIL IN BOTTOM SLAB

TABLE "A"

REQUIRED CORPORATION STOP SIZES AT GATE VALVE

DIA. OF MAIN INCHES	SIZE OF CORP. STOP
4	1" x 1¼"
6	1" x 1¼"
8	1" x 1¼"
12	1" x 1¼"
16	1" x 1¼"
20	1" x 1¼"
24	1½" x 2"
36	1½" x 2"
42	1½" x 2"

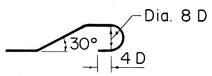

BAR BENDING DETAIL

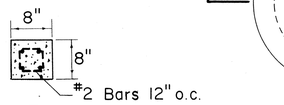

SECTION THRU LINTEL

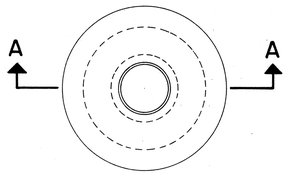

PLAN

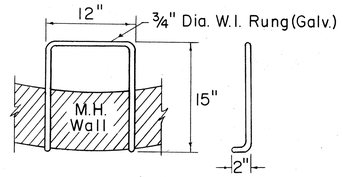

DETAIL OF RUNG

TYPE "B" AND "C" MANHOLES

TYPE "B" 4'-6" DIA. (FOR 12" G.V.)

TYPE "C" 4'-0" DIA. (FOR 6" & 8" G.V.)

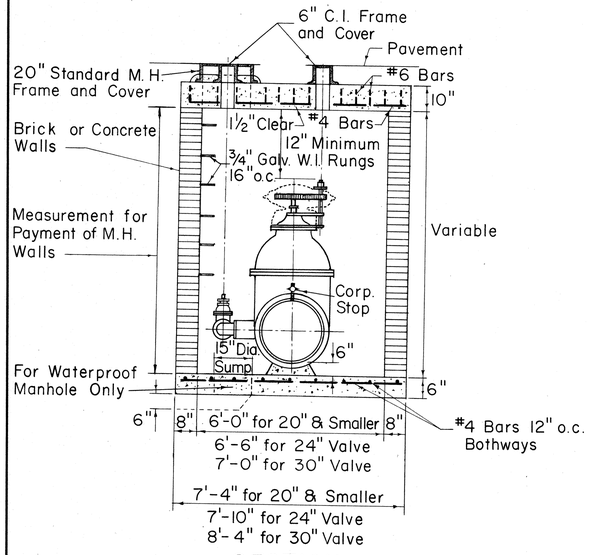

SECTION

TYPE "A" MANHOLE FOR SPUR GEARED GATE VALVES

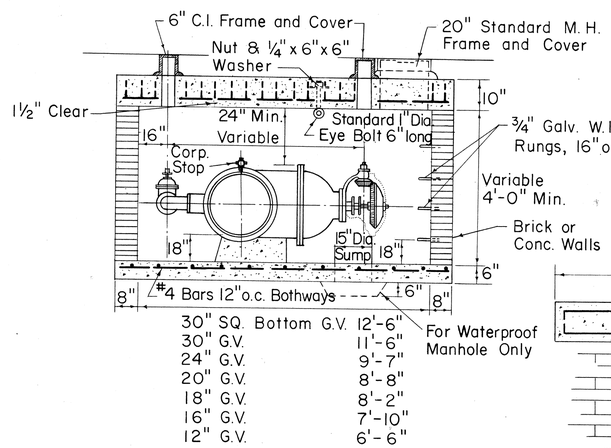

SECTION

TYPE "A" MANHOLE FOR BEVEL GEARED GATE VALVES

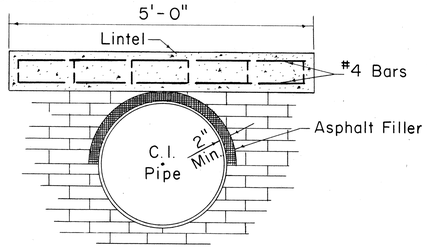

DETAIL OF LINTEL AND ASPHALT FILLER

APPROVED:

DIRECTOR OF TRANSPORTATION DATE

W. S. Ginoli 2-8-66

ASSISTANT CHIEF ENGINEER DATE
BOARD OF WATER SUPPLY

WILSON, OKAMOTO, OKA, INC.
PARK ASSOCIATES, INC.
ARCHITECTS & ENGINEERS

STATE OF HAWAII
DEPARTMENT OF TRANSPORTATION
HIGHWAYS DIVISION

BOARD OF WATER SUPPLY
CITY & COUNTY OF HONOLULU

STANDARD DETAILS

INTERSTATE HIGHWAY (LUNALILO FRWY)
F.A.I. PROJ. NO. I-HI-1(6) UNIT 2

Not to Scale Date: NOVEMBER, 1965

SHEET NO. 10 OF 12 SHEETS

S 6

LIETZ 1103 ARKWRIGHT TRACING CLOTH 10-60 200P

FED. AID DIST. NO.	STATE	FED. AID PROJ. NO.	FISCAL YEAR	SHEET NO.	TOTAL SHEETS
HAWAII	HAWAII	I-H1-1(6) UNIT 2	1966	87	203

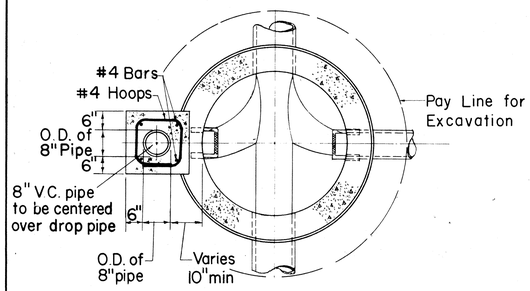

SECTION A-A

Scale: 1/2" = 1'-0"

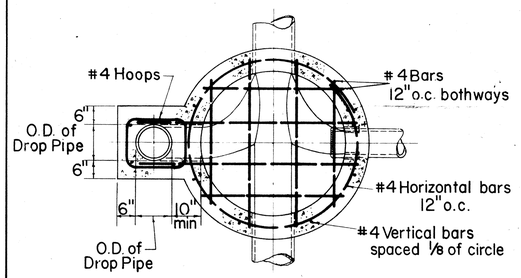

SECTION B-B

Scale: 1/2" = 1'-0"

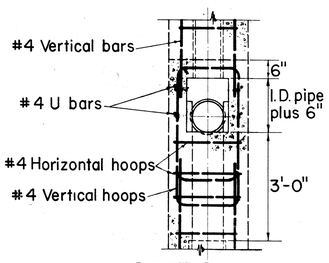

SECTION C-C

Scale: 1/2" = 1'-0"

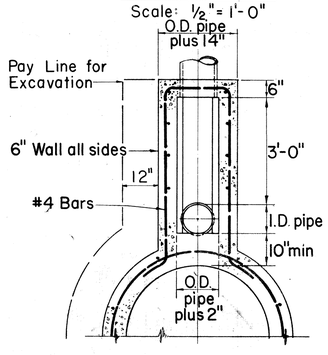

SECTION D-D

Scale: 1/2" = 1'-0"

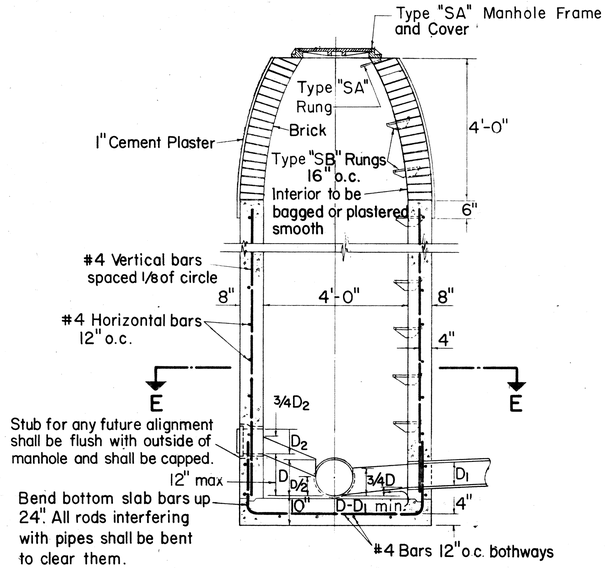

PLAIN MANHOLE

Scale: 1/2" = 1'-0"

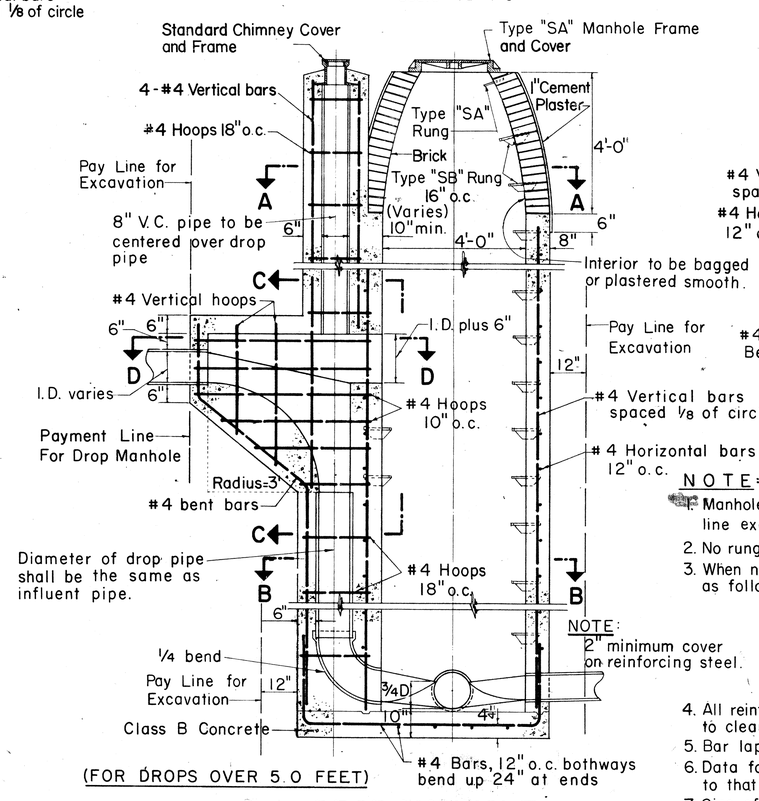

(FOR DROPS OVER 5.0 FEET)

DROP MANHOLE

Scale: 1/2" = 1'-0"

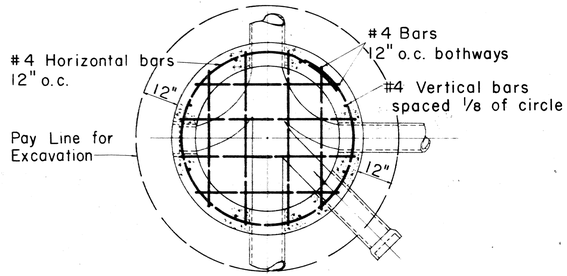

SECTION E-E

Scale: 1/2" = 1'-0"

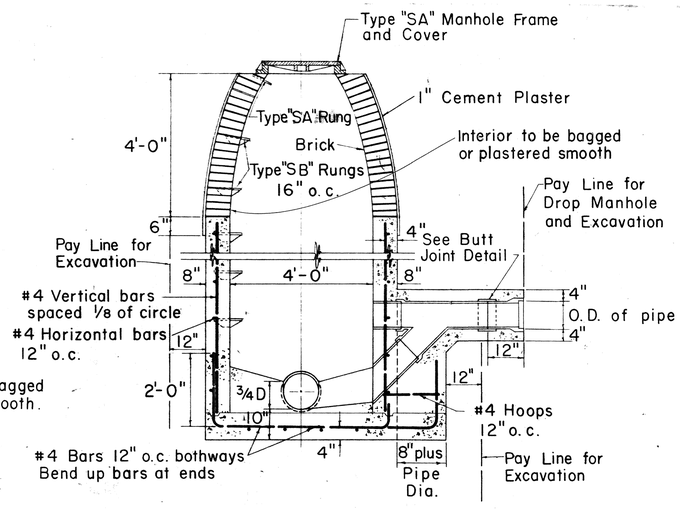

(FOR DROPS UNDER 5.0 FEET)

SHALLOW DROP MANHOLE

Scale: 1/2" = 1'-0"

NOTE:

1. Manhole rungs shall not be aligned above any flow line except in drop manhole.
2. No rungs shall be installed in manholes less than 3' high.
3. When not otherwise noted, manhole stubs shall be sloped as follows:

Pipe Size	Rise Per Foot
6"	1/8"
8"	3/32"
10"	1/16"
12"	1/16"

4. All reinforcing rods interfering with pipes shall be bent to clear them.
5. Bar lap to be 40 diameters in length.
6. Data for special manholes not shown shall be similar to that for plain manholes.
7. Size of drop pipe in all Drop Manholes shall be same as influent line.
8. Manhole wall to be of reinforced concrete to height 1' above normal ground water table.

NOTE:

Reinforced concrete manhole walls (See detail of plain manhole) shall be used for portions below the water table.

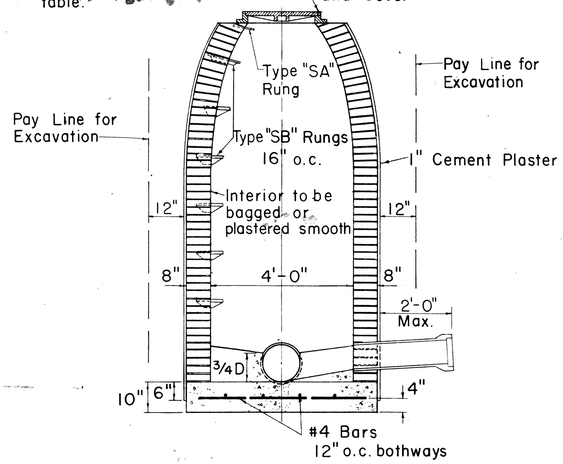

(MAXIMUM HEIGHT - 10.0 FEET)

BRICK MANHOLE

Scale: 1/2" = 1'-0"

Payment for excavation for manholes shall be made under unit price for trench excavation and shall be measured to one foot outside of walls from original ground elevation to authorized bottom elevation.

Payment for manhole walls (brick, or cast-in-place concrete) shall include brick, motar, concrete, reinforcing steel, cast-iron steps, galvanized wrought iron rungs, and plastering.

APPROVED:

12-9-65

SEWER SYSTEM DIRECTOR, DIVISION OF SEWERS — DATE

STATE OF HAWAII
DEPARTMENT OF TRANSPORTATION
HIGHWAYS DIVISION
DIVISION OF SEWERS
CITY & COUNTY OF HONOLULU

STANDARD DETAILS

SEWERS - DROP MANHOLE AND BRICK MANHOLE, DETAILS

INTERSTATE HIGHWAY (LUNALILO FREEWAY)
F.A.I. PROJ. No. I-H1-1(6) UNIT 2

Scales: As Noted — Date: NOVEMBER 1965

SHEET NO. 11 OF 13 SHEETS

IMPERIAL 196 K & E CO., N.Y. TRADE MARK

FED. AID DIST. NO.	STATE	FED. AID PROJ. NO.	FISCAL YEAR	SHEET NO	TOTAL SHEETS
HAWAII	HAWAII	I-H1-1(6) UNIT 2	1966	88	203

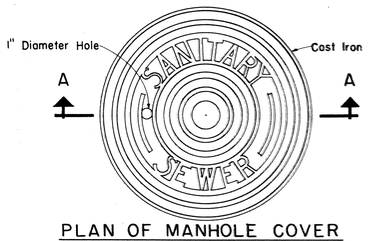

PLAN OF MANHOLE COVER
Scale: 1 1/2" = 1'-0"

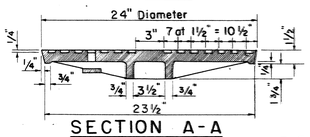

SECTION A-A
Scale: 1 1/2" = 1'-0"

NOTE:
This cover is used with the "SA" or "SD" frame

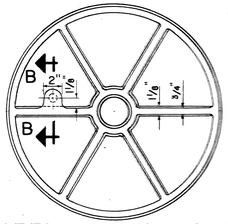

BOTTOM VIEW OF COVER
Scale: 1 1/2" = 1'-0"

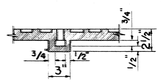

SECTION B-B

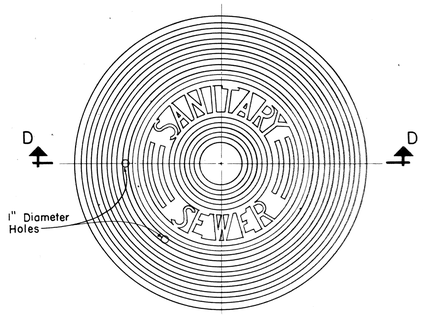

PLAN
SPECIAL MANHOLE COVER
Scale: 1 1/2" = 1'-0"

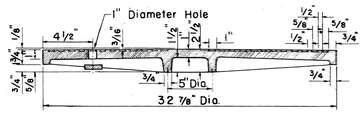

SECTION D-D
Scale: 1 1/2" = 1' 0"

Approx. Weight 260 Pounds

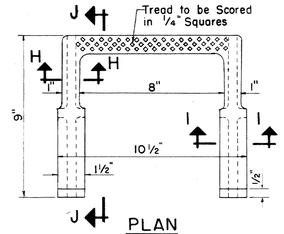

PLAN

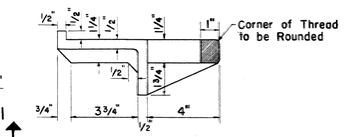

SECTION J - J

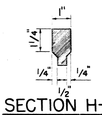

SECTION H-H

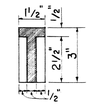

SECTION I - I

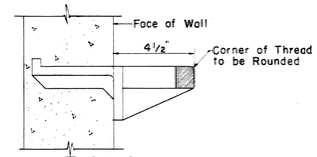

METHOD OF INSTALLATION

TYPE "SB" MANHOLE RUNGS (CAST IRON)
Scale: 3" = 1'-0"

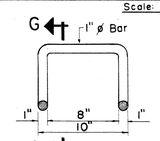

PLAN

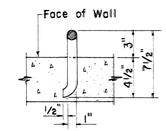

SECTION G-G

TYPE "SA" MANHOLE RUNGS (WROUGHT IRON)
Scale: 1 1/2" = 1'-0"

PLAN OF COVER

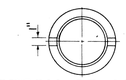

BOTTOM OF COVER

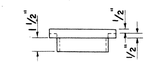

ELEVATION

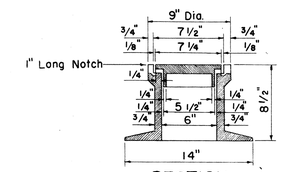

SECTION

DROP MANHOLE CHIMNEY CASTINGS
Scale: 1 1/2" = 1'-0"

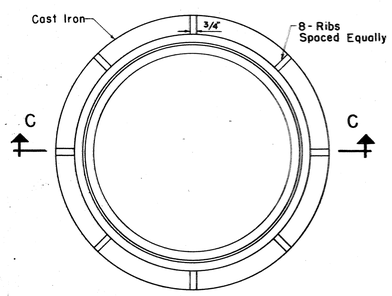

PLAN OF MANHOLE FRAME
Scale: 1 1/2" = 1'-0"

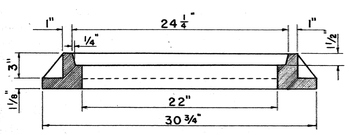

SECTION C-C
Scale: 1 1/2" = 1'-0"

TYPE "SA" SEWER MANHOLE FRAME AND COVER
Scale: 1 1/2" = 1'-0"

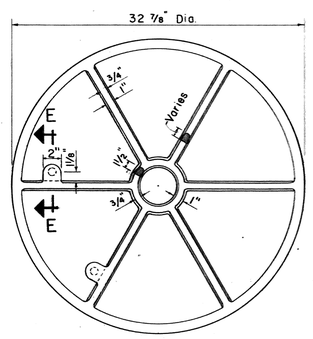

BOTTOM VIEW OF COVER
Scale: 1 1/2" = 1'-0"

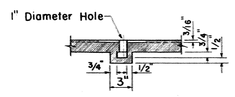

SECTION E-E
Scale: 1 1/2" = 1'-0"

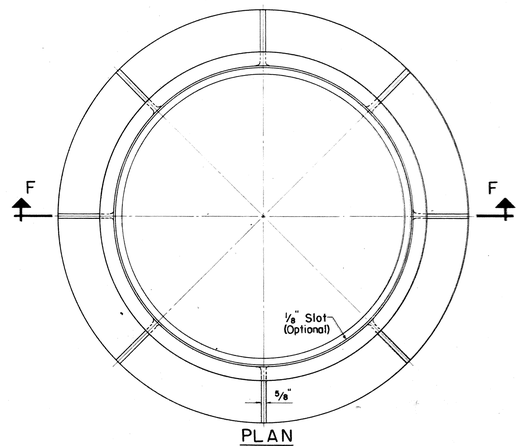

PLAN
SPECIAL MANHOLE FRAME
Scale: 1 1/2" = 1'-0"

Approx. Weight 437 Pounds

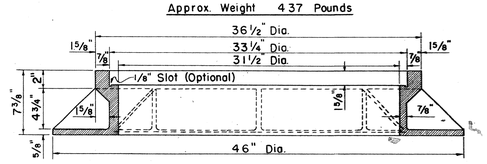

SECTION F-F
Scale: 1 1/2" = 1'-0"

TYPE "SB" SEWER MANHOLE FRAME AND COVER
Scale: 1 1/2" = 1'-0"

APPROVED:

12-5-05
SEWER SYSTEM DIRECTOR, DIVISION OF SEWERS — DATE

STATE OF HAWAII
DEPARTMENT OF TRANSPORTATION
HIGHWAYS DIVISION
DIVISION OF SEWERS
CITY & COUNTY OF HONOLULU
STANDARD DETAILS
SEWERS - MANHOLE RUNGS, CHIMNEY CASTINGS AND FRAME AND COVER DETAILS
INTERSTATE HIGHWAY (LUNALILO FREEWAY)
F.A.I. PROJ. NO. I-H1-1(6) UNIT 2
Scales: As Noted — Date: NOVEMBER 1965

SHEET NO. 12 OF 13 SHEETS

ORIGINAL PLAN		DATE
	SEWER PLOTTED BY	
	DRAWN BY	11-5-65
	TRACED BY	11-5-65
NOTE BOOK	DESIGNED BY	
	QUANTITIES BY	
No.	CHECKED BY	

HEPO 125 IMPERIAL TRACING CLOTH 10-62

FED AID DIST. NO.	STATE	FED AID PROJ NO	FISCAL YEAR	SHEET NO.	TOTAL SHEETS
HAWAII	HAWAII	I-H1-1(6) UNIT 2	1966	89	203

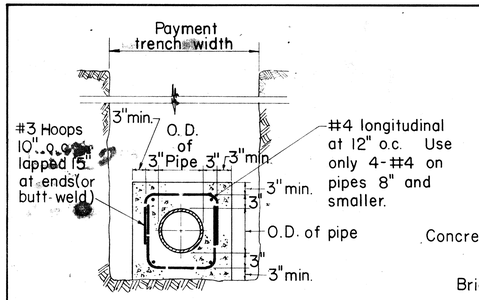

DETAIL OF CONCRETE JACKET

Scale: 3/4" = 1'-0"

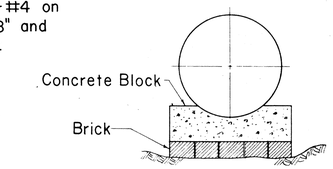

METHOD OF USING BRICKS UNDER CONCRETE BLOCKS

Not To Scale

Contractor shall set Concrete Blocks on undisturbed ground. Where ground is too low, the contractor shall not heap up dirt under the Concrete Block but use Concrete Bricks to take up the deficiency, scraping away beneath Concrete Block to give sufficient room for Brick.

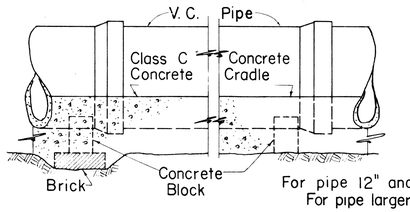

ELEVATION SHOWING METHOD OF LAYING PIPE

Not To Scale

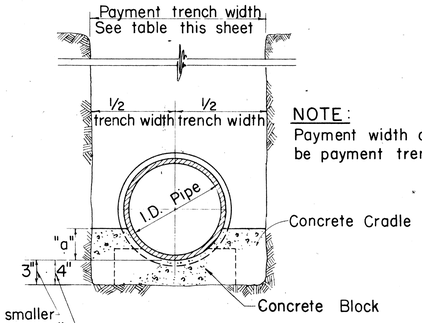

NOTE:
Payment width of cradle shall be payment trench width.

CONCRETE CRADLE FOR VITRIFIED CLAY PIPE

Not To Scale

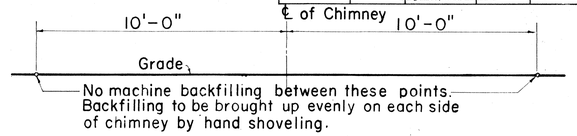

No machine backfilling between these points. Backfilling to be brought up evenly on each side of chimney by hand shoveling.

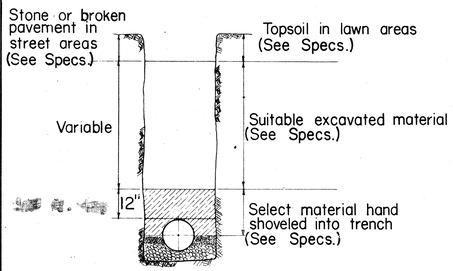

METHOD OF BACKFILL

Not To Scale

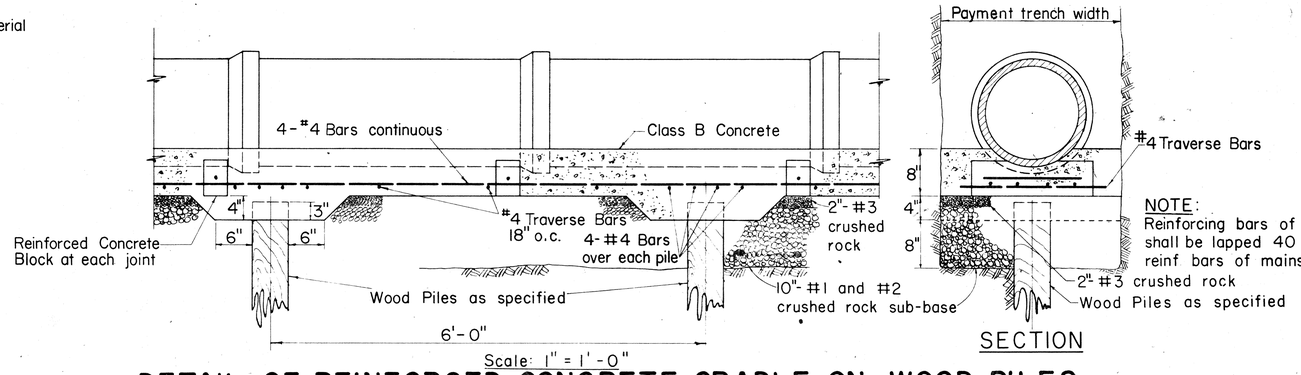

Scale: 1" = 1'-0"

SECTION

NOTE:
Reinforcing bars of laterals shall be lapped 40 dia. to reinf bars of mains.

DETAIL OF REINFORCED CONCRETE CRADLE ON WOOD PILES

(FOR 6, 8, 10 & 12 IN. V.C. PIPE)

DETAIL OF REINFORCED CONCRETE CRADLE WITHOUT PILES SIMILAR EXCEPT FOR WOOD PILES AND PILE CAPS

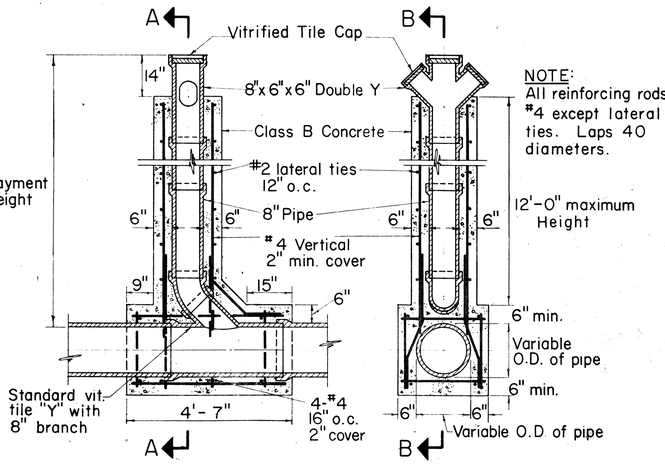

NOTE:
All reinforcing rods #4 except lateral ties. Laps 40 diameters.

12'-0" maximum Height

SECTION B-B SECTION A-A

DETAILS OF CHIMNEY

Scale: 1/2" = 1'-0"

Payment quantities for trench excavation, crushed rock fill, crushed rock cradle, and crushed rock sub-base shall be computed using payment trench widths as shown in the table of "Trench Widths". No payment shall be made for excess quantities resulting from trench widths greater than the payment trench widths shown.

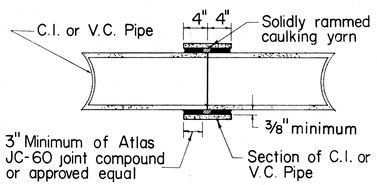

BUTT JOINT DETAIL

Scale: 1" = 1'-0"

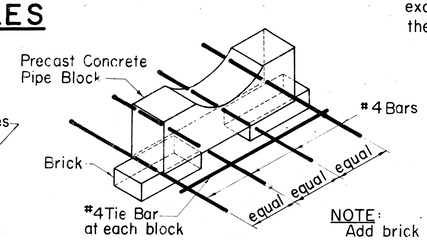

NOTE:
Add brick for larger size pipe

Not To Scale

ALTERNATE DETAIL OF CONC. PIPE BLOCK FOR REINF. CRADLE

VITRIFIED CLAY PIPE TABLE				
TRENCH WIDTHS		DIM. OF CONC. CRADLE		
PIPE SIZE	PAY. WIDTH	PIPE SIZE	"a"	WIDTH
6"	24"	6"	3"	24"
8"	24"	8"	3"	24"
10"	24"	10"	3"	24"
12"	30"	12"	3"	30"
15"	38"	15"	4"	38"
18"	41"	18"	5"	41"
21"	45"	21"	5"	45"
24"	50"	24"	6"	50"
27"	53"	27"	7"	53"
30"	57"	30"	7"	57"

NOTE: Permission is to be secured from property owner before construction at property line is started.
To avoid cutting of short nipple, 6" pipe may extend a maximum of 12" into the property to be served.

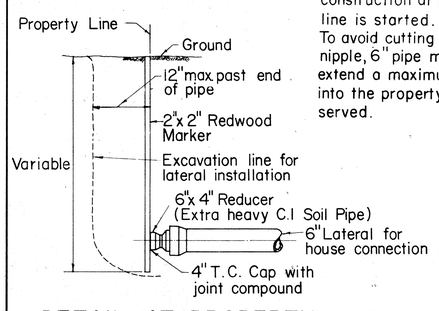

DETAIL AT PROPERTY LINE

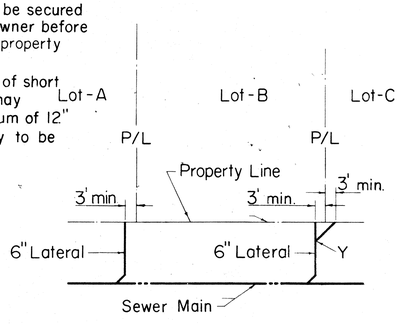

LAYOUT

CONSTRUCTION OF LATERALS

Not To Scale

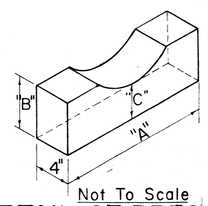

Not To Scale

DETAIL OF PRECAST CONC. PIPE BLOCK

CONCRETE BLOCK DIMENSIONS			
PIPE SIZE	"A"	"B"	"C"
6"	1'-2"	6"	3"
8"	1'-5"	6"	3"
10"	1'-7"	6"	3"
12"	1'-7"	6"	3"
15"	1'-8"	6"	4"
18"	1'-9"	6"	4"
21"	1'-10"	6"	4"
24"	1'-11"	6"	4"
27"	2'-0"	6"	4"
30"	2'-3"	6"	4"

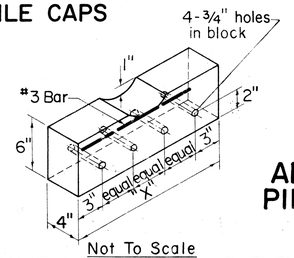

Not To Scale

DETAIL OF CONC. PIPE BLOCK FOR REINF. CRADLE

DIM. OF REINF. CONC. BLOCK	
PIPE SIZE	"X"
6"	1'-6"
8"	1'-6"
10"	1'-8"
12"	1'-8"
15"	1'-10"
18"	1'-10"
21"	1'-10"
24"	2'-0"
27"	2'-0"
30"	2'-0"

APPROVED:

SEWER SYSTEM DIRECTOR, DIVISION OF SEWERS — DATE 12-3-65

STATE OF HAWAII
DEPARTMENT OF TRANSPORTATION
HIGHWAYS DIVISION
DIVISION OF SEWERS
CITY & COUNTY OF HONOLULU

STANDARD DETAILS

SEWERS - CONCRETE JACKET & MISCELLANEOUS DETAILS

INTERSTATE HIGHWAY (LUNALILO FREEWAY)
F.A.I. PROJ. No. I-H1-1(6) UNIT 2

Scales: As Noted — Date: NOVEMBER 1965

SHEET NO. 13 OF 13 SHEETS

Revised Oct. 1965

IMPERIAL 136 X 8 E CO., N.Y. TRADE MARK