FED. ROAD DIST. NO.	STATE	FED. AID PROJ. NO.	FISCAL YEAR	SHEET NO.	TOTAL SHEETS
HAWAII	HAW	BRS-0170(2) UNIT 3	1960	69	70

FED. ROAD DIST. NO.	STATE	FED. AID PROJ. NO.	FISCAL YEAR	SHEET NO.	TOTAL SHEETS
HAWAII	HAW	BRS-0170(2) UNIT 4	1960	48	118
		BRS-0170(2) UNITS	1960	46	115

6-23-60
7-5-60

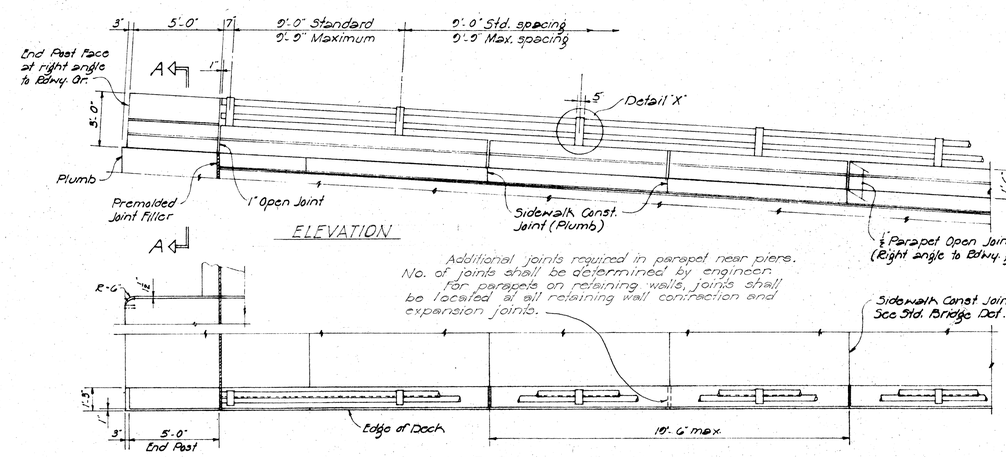

ALUMINUM RAILING DETAIL

Scale ~ 1/4" = 1'-0"

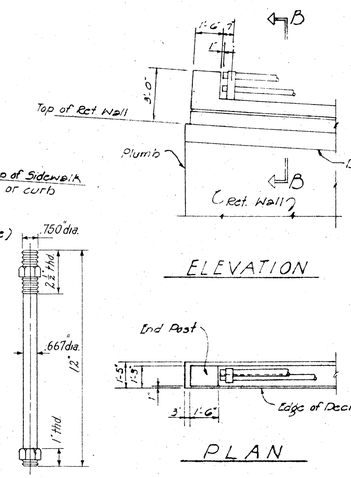

ANCHOR BOLT DETAIL

Scale: 3" = 1'-0"

TREATMENT OF RAILING ON RETAINING WALL

Scale ~ 1/4" = 1'-0"

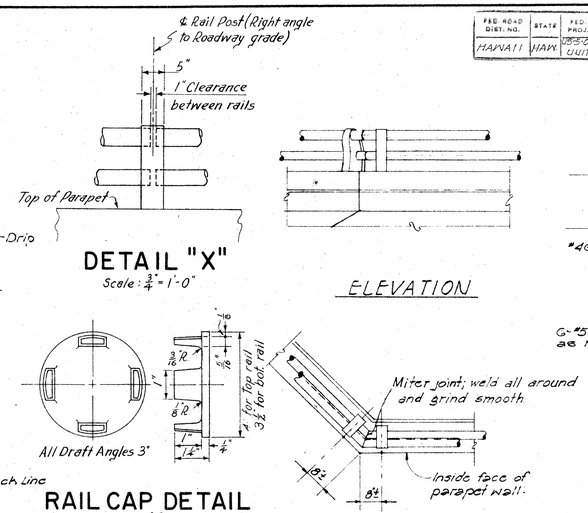

RAIL CAP DETAIL

Scale: 6/8" = 1'

TREATMENT OF RAILING AT SKEWED JOINT

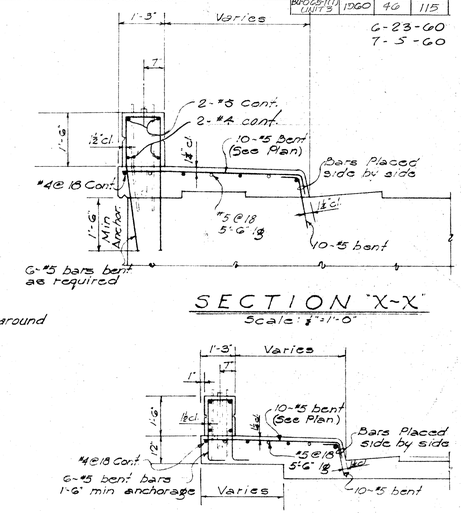

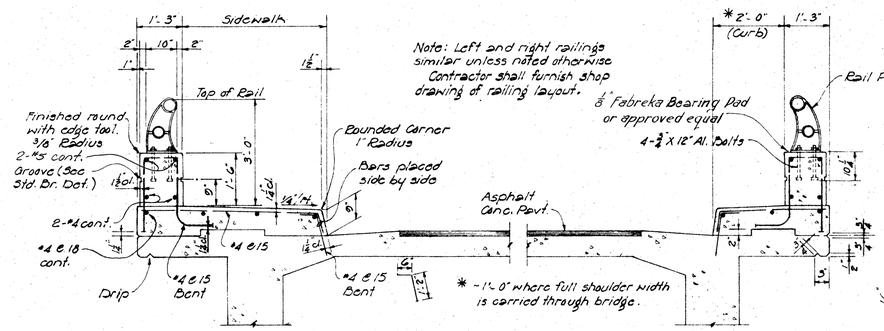

TYPICAL SECTION

Scale ~ 1/2" = 1'-0"

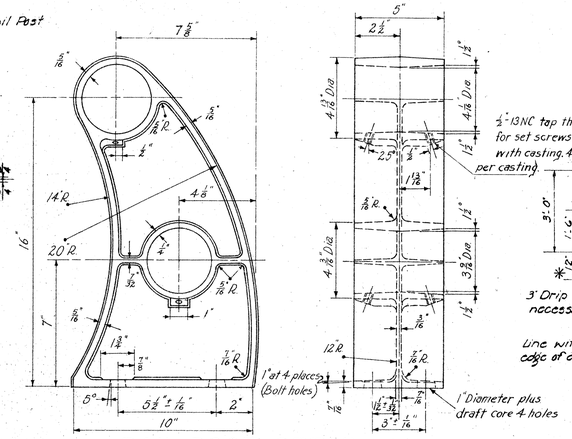

RAIL POST DETAIL

Scale: 3" = 1'-0"

SECTIONS

Scale ~ 3/8" = 1'-0"

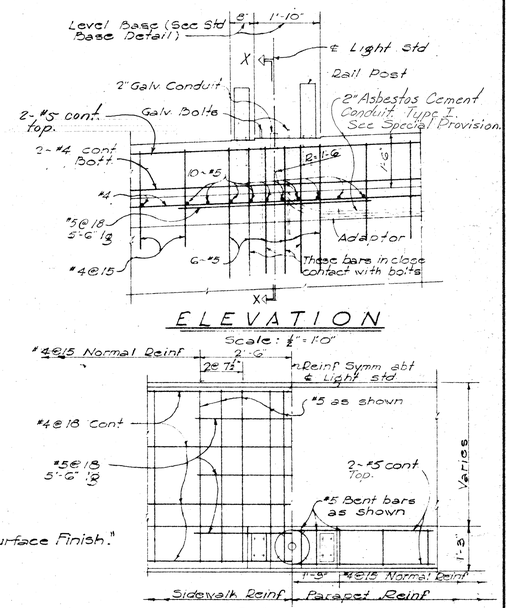

LIGHT STD. BASE REINF. DETAIL

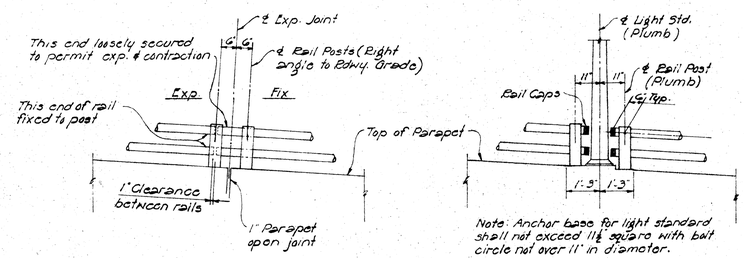

TREATMENT OF RAILING AT EXP. JOINT

Scale ~ 3/8" = 1'-0"

TREATMENT OF RAILING AT LIGHT STD.

Scale ~ 3/8" = 1'-0"

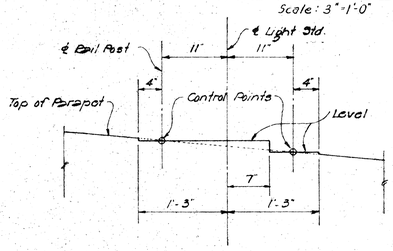

LIGHT STD. BASE DETAIL

Scale ~ 1" = 1'-0"

GENERAL NOTE

Except where detailed otherwise in the plans, all details on this sheet govern.

Aluminum railing concrete parapet & end post to receive "Class 2 Surface Finish."

SPECIFICATION FOR ALUMINUM RAILING

ITEM	DESCRIPTION	ALLOY	UNIT WT.
Top Rail	Al. Alloy Drawn Or Extruded Tube 4" o.d. x 1/8" thick wall.	6061 - T6	1.79 #/ft.
Bot. Rail	Al. Alloy Drawn Or Extruded Tube 3½" o.d. x 1/8" thick wall.	6061 - T6	1.56 #/ft.
*Rail Post	Permanent Mold Casting. See Rail Post Detail	Post A356 - T6 Set Sc. 2024 - T4	16.0 #/ea.
Rail Cap	See Rail Cap Detail	Cap 356 - T6	Top - .415 #/ea. Bot. - .340 #/ea.
Bolts	See Anchor Bolt Detail. Provide Hexagon Nut and Plain Washer	Bolt 2024 - T4 Nut 6061 - T6 Wash. 2024 - T4	——

* Rail Post Finish: Front, top and rear faces of post shall receive a standard scratch brush finish, to be approved by the Engineer.

HAWAII STATE HIGHWAY DEPARTMENT
STATE OF HAWAII

STANDARD DETAILS

ALUMINUM RAILING

SCALE AS NOTED

SHEET No. OF SHEETS

ORIGINAL PLAN	SURVEY PLOTTED BY	DATE 1-58
	DESIGNED BY M.P. Bartels	
	DRAWN BY A. Yamura	
	TRACED BY	
NOTE BOOK No.	QUANTITIES BY	
	QUANTITIES CHECKED BY	
	CHECKED BY	

APPROVED DATE: Aug. 26, 1960

STATE HIGHWAY ENGINEER

$526.29 $174.48 $161.46

78

PRINTED ON DIEPO 1000H CLEARPRINT