FED. ROAD DIST. NO.	STATE	FED. AID PROJ. NO.	FISCAL YEAR	SHEET NO.	TOTAL SHEETS
HAWAII	HAW.	STP-8930(2)	2007	ADD. 189	331

LEGEND:

- Structure excavation pay limits
- Aggregate subbase
- 2 Coarse aggregate

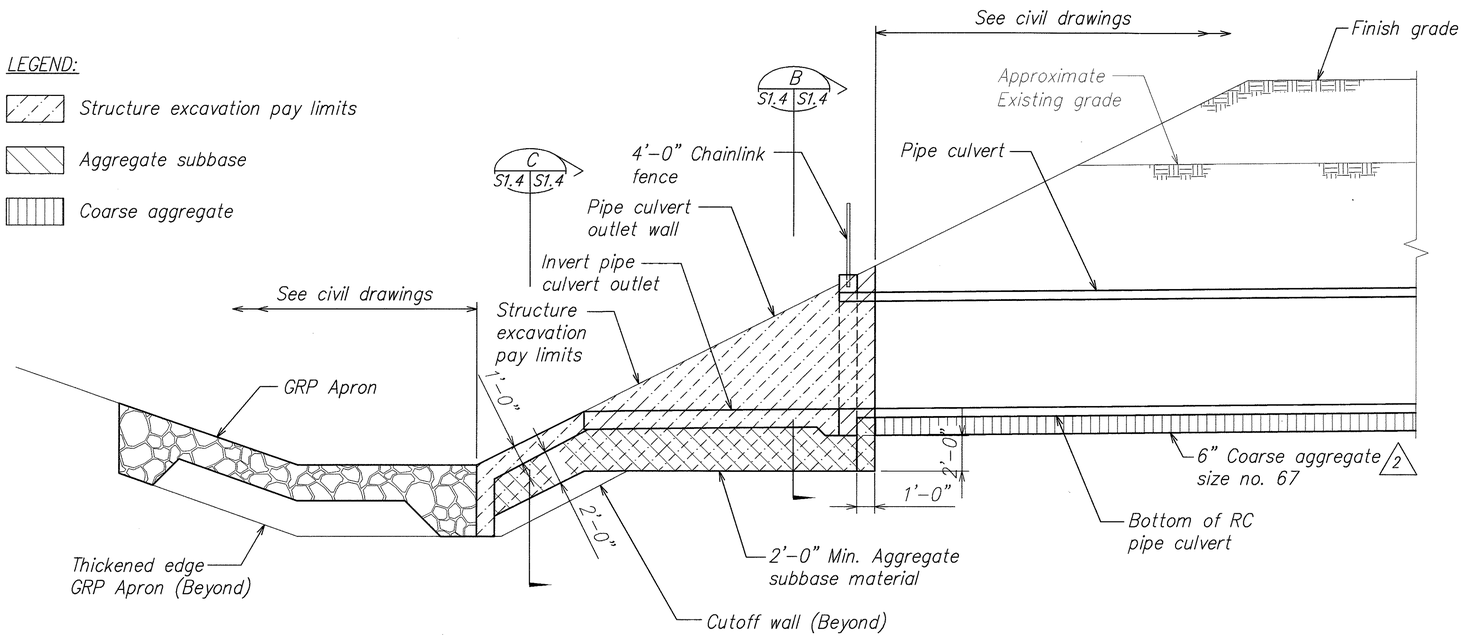

2 NOTE:
The cost of aggregate subbase shall be incidental to the cost of excavation of the structure.

2 DRAINLINE OUTLET EXCAVATION AND PAY LIMITS (A S1.4 S1.4)

Scale: 1/4" = 1'-0"

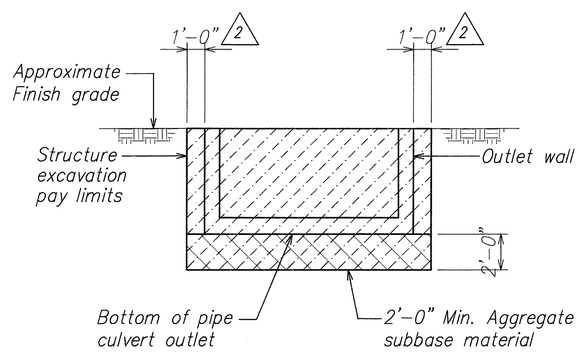

2 DRAINLINE OUTLET EXCAVATION AND PAY LIMITS (B S1.4 S1.4)

Scale: 1/4" = 1'-0"

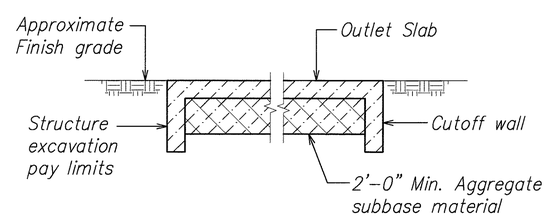

2 DRAINLINE OUTLET EXCAVATION AND PAY LIMITS (C S1.3, S1.4 S1.4)

Scale: 1/4" = 1'-0"

DATE	REVISION
5/11/07	2 Revised and Added Notes, Revised Titles and Dimensions

STATE OF HAWAII
DEPARTMENT OF TRANSPORTATION
HIGHWAYS DIVISION

2 DRAINLINE OUTLET EXCAVATION AND PAY LIMITS

North-South Road

Phase 1B

F.A.I. Proj. No. STP-8930(2)

Scale: As Noted Date: Feb. 21, 2007

DAVID K. FUJIWARA LICENSED PROFESSIONAL ENGINEER NO. 8104-S HAWAII, U.S.A.

THIS WORK WAS PREPARED BY ME OR UNDER MY SUPERVISION.

SIGNATURE EXPIRATION DATE OF THE LICENSE 4-30-08

ORIGINAL PLAN | NOTE BOOK No. | SURVEY PLOTTED BY | DRAWN BY | TRACED BY | DESIGNED BY | QUANTITIES BY | CHECKED BY | DATE