| FED. ROAD DIST. NO. | STATE | FED. AID PROJ. NO. | FISCAL YEAR | SHEET NO. | TOTAL SHEETS |
|---|---|---|---|---|---|
| HAWAII | HAW. | STP-8930(2) | 2007 | 61 | 331 |

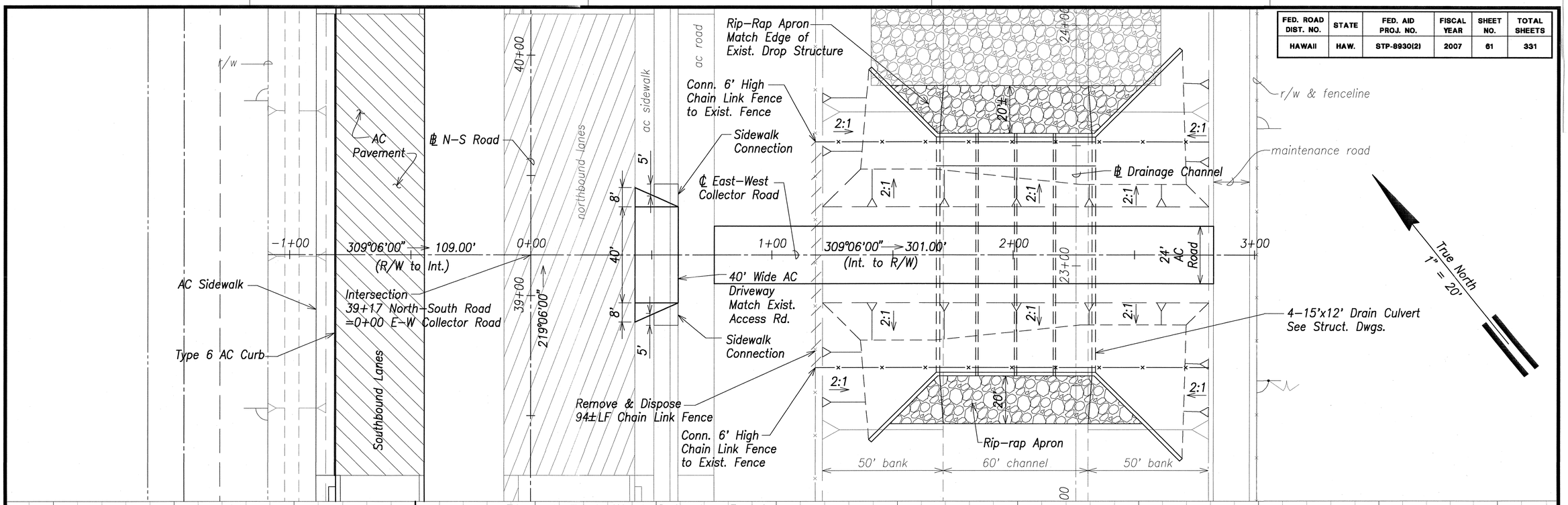


## Plan – East-West Collector Road

Scale: 1" = 20'

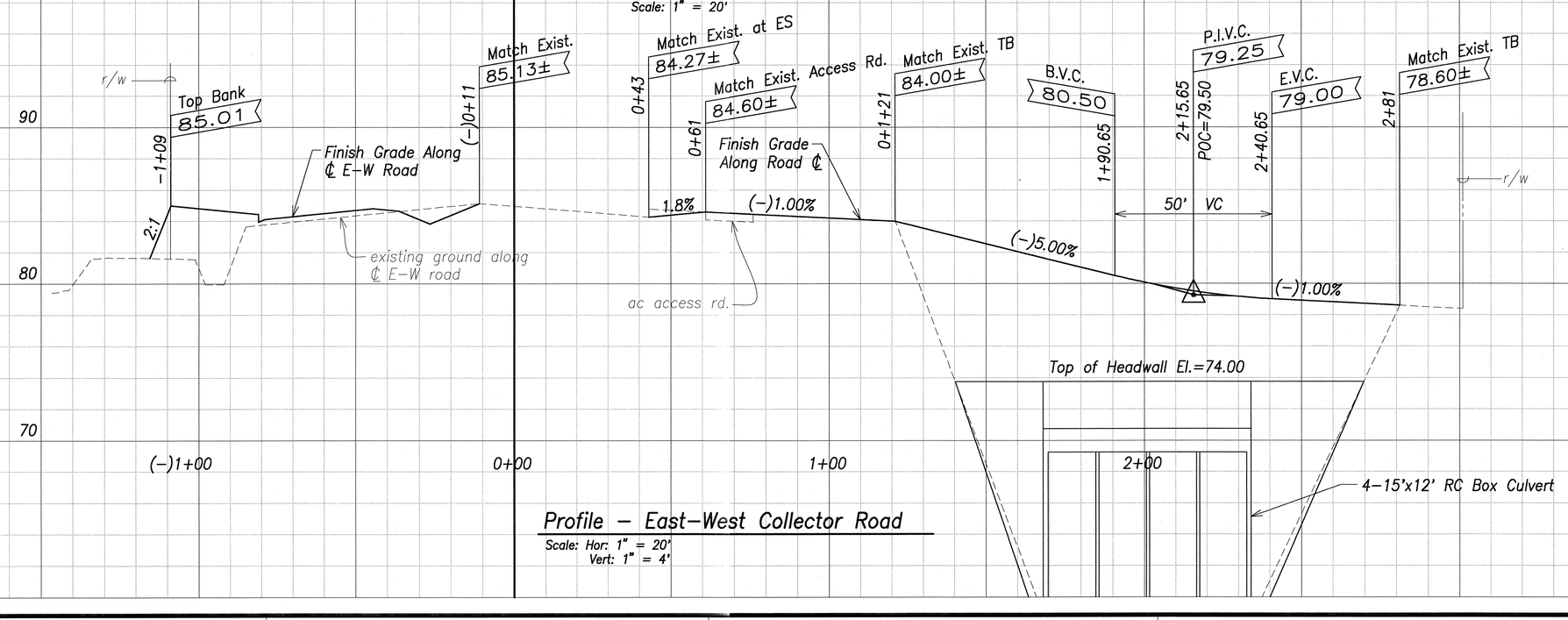


## Profile – East-West Collector Road

Scale: Hor: 1" = 20'
Vert: 1" = 4'

GREG H. HIYAKUMOTO
LICENSED PROFESSIONAL ENGINEER
No. 6662-C
HAWAII, U.S.A.

THIS WORK WAS PREPARED BY ME OR UNDER MY SUPERVISION.

SIGNATURE — DATE OF LICENSE EXPIRY: APR 30, 2008

Graphic Scale:

1" = 4' : 4' 2' 0 4' 8'

1" = 20' : 20' 10' 0 20' 40'

Scale in Feet

STATE OF HAWAII
DEPARTMENT OF TRANSPORTATION
HIGHWAYS DIVISION

**EAST-WEST COLLECTOR RD.**
**PLAN AND PROFILE**

North-South Road
Phase 1B
F.A.I. Proj. No. STP-8930(2)

Scale: As Shown — Date: Feb 21, 2007

SHEET No. C4.7 OF 150 SHEETS

ORIGINAL PLAN — NOTE BOOK No. — SURVEY PLOTTED BY — DRAWN BY — TRACED BY — DESIGNED BY — QUANTITIES BY — CHECKED BY — DATE

| FED. ROAD DIST. NO. | STATE | FED. AID PROJ. NO. | FISCAL YEAR | SHEET NO. | TOTAL SHEETS |
|---|---|---|---|---|---|
| HAWAII | HAW. | STP-8930(2) | 2007 | C.O. 61S-2 | 331 |

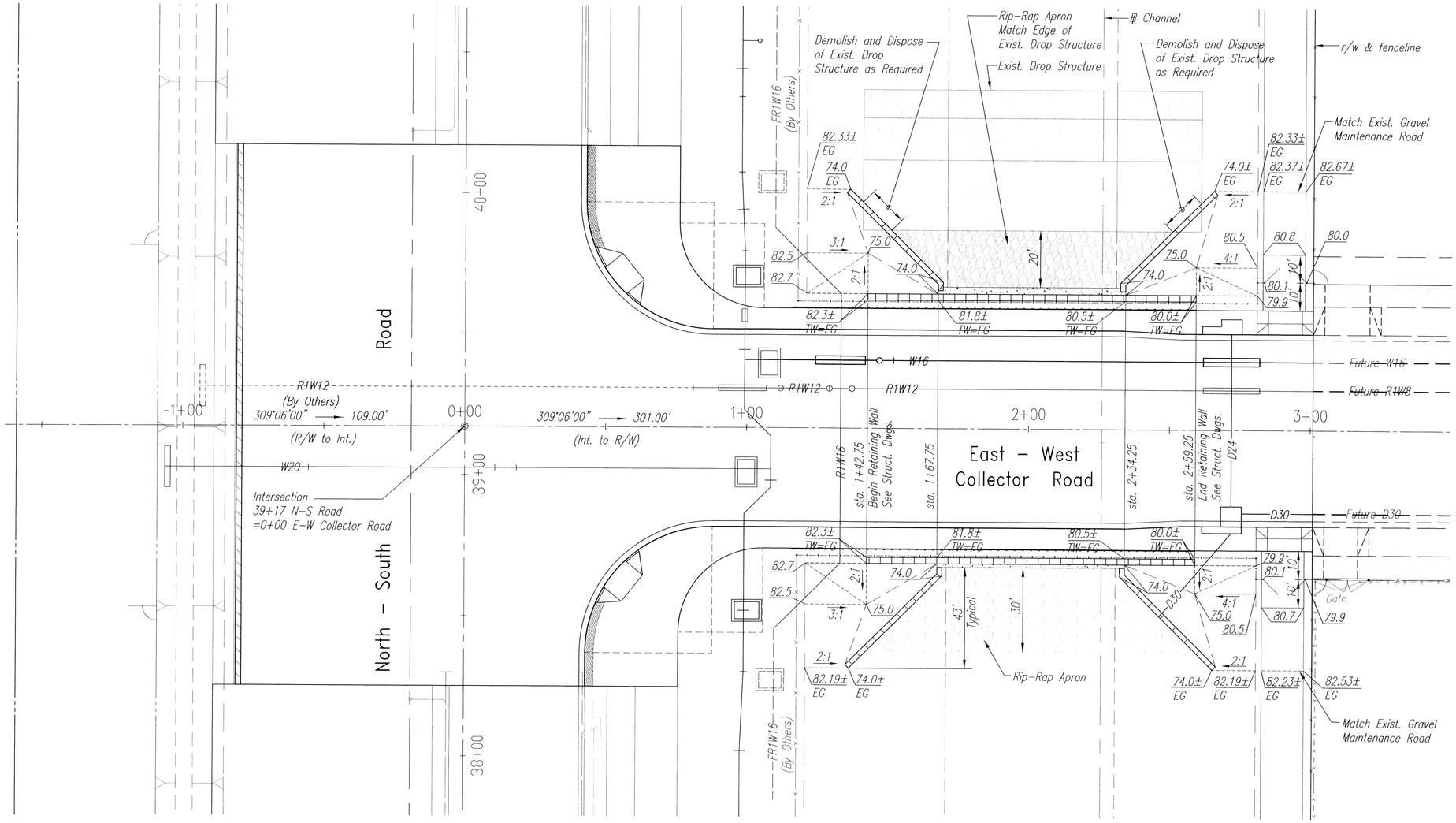


TRUE NORTH
Scale: 1 in. = 20 ft.

## Grading Plan – East–West Collector Road

Scale : 1" = 20'

| ORIGINAL PLAN | SURVEY PLOTTED BY | DATE |
|---|---|---|
| | DRAWN BY | |
| | TRACED BY | |
| NOTE BOOK | DESIGNED BY SS | |
| | QUANTITIES BY | |
| No. | CHECKED BY DSK | |

DOUGLAS S. KAMIYA
LICENSED PROFESSIONAL ENGINEER
No. 3706-C
HAWAII, U.S.A.

THIS WORK WAS PREPARED BY ME OR UNDER MY SUPERVISION.

SIGNATURE — APRIL 30, 2010 DATE OF LICENSE EXPIRATION

Community Planning and Engineering, Inc.
Engineering Design | Construction Management | Infrastructure Planning
1100 Alakea Street, Sixth Floor Honolulu, Hawaii

STATE OF HAWAII
DEPARTMENT OF TRANSPORTATION
HIGHWAYS DIVISION

# EAST–WEST COLLECTOR RD.
# GRADING PLAN

North–South Road
Phase 1B
F.A.I. Proj. No. STP–8930(2)

Scale : As Shown Date : Apr. 15, 2008

SHEET No. C4.7 OF 150 SHEETS

C.O. 61S-2

| FED. ROAD DIST. NO. | STATE | FED. AID PROJ. NO. | FISCAL YEAR | SHEET NO. | TOTAL SHEETS |
|---|---|---|---|---|---|
| HAWAII | HAW. | STP-8930(2) | 2007 | C.O. 61S-3 | 331 |

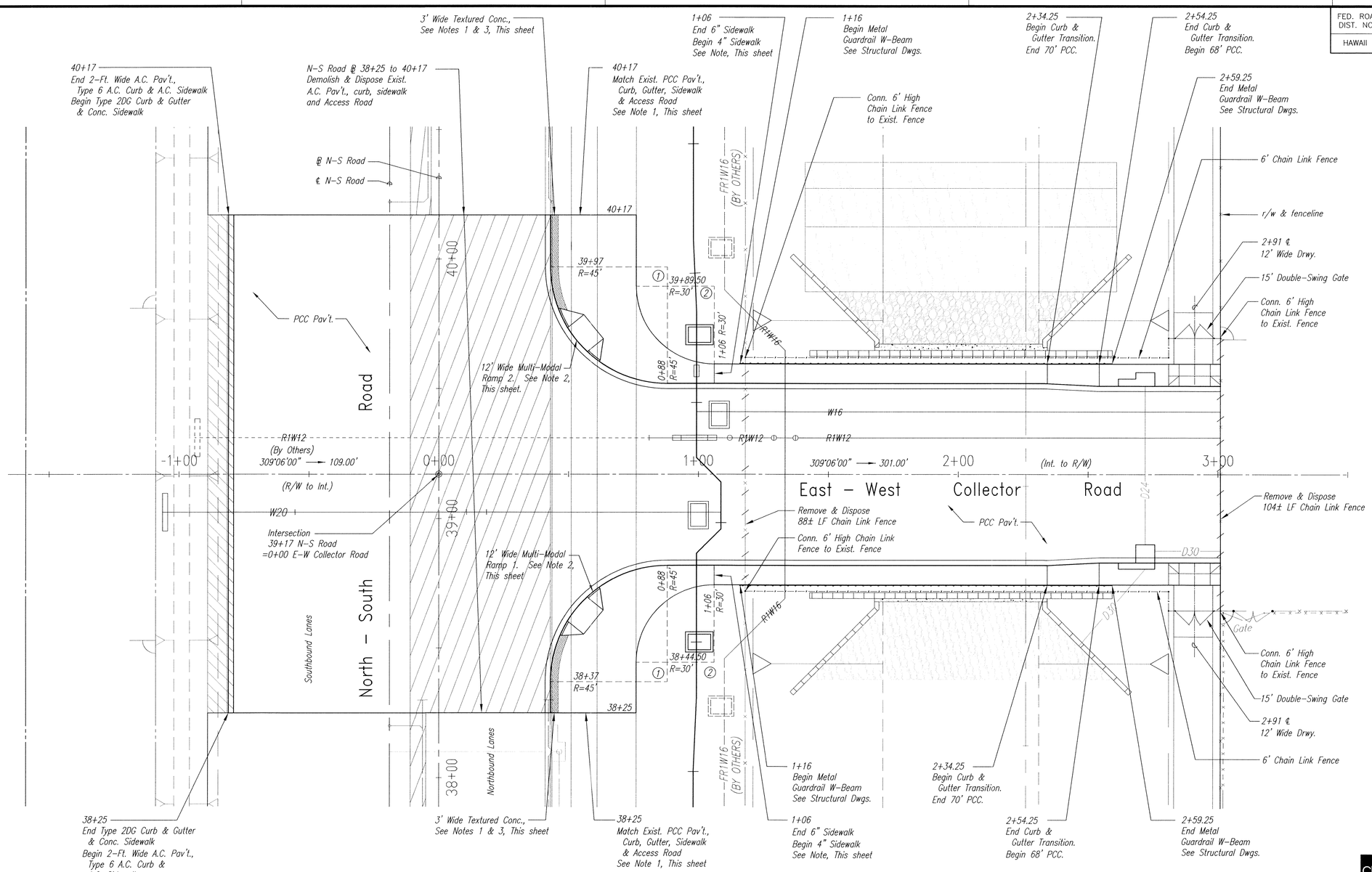


| CURVE DATA | | |
|---|---|---|
| CURVE | (1) | (2) |
| Δ | 90°00' | 90°00' |
| Δ/2 | 45°00' | 45°00' |
| R | 45.00' | 30.00' |
| T | 45.00' | 30.00' |
| C | 63.64' | 42.43' |
| L | 70.69' | 47.12' |

NOTES:

1. Const. 6" Thk. Reinf. Conc. Sidewalk w/ 6x6-W1.4xW1.4 WWF. N-S @ 38+25 & 40+17 to E-W @ 1+06. Match Access Rd. See Det., Sht. C5.7.
2. See Det., Sht. C.O. 62. For Reinf., See Std. Det., D-05 6" Thk. Conc. Drwy. Apron. For Finish, See Std. Det., TE-69 Type A Ramp.
3. Use "Natural Stone - Sculptured Granite Pattern" imprinting tool Lithotex Pavecrafters Order Number 4490 from Scofield Systems or approved equal.

## Plan - East-West Collector Road

Scale : 1" = 20'

ORIGINAL PLAN | NOTE BOOK No. | SURVEY PLOTTED BY | SURVEY BY | TRACED BY | DESIGNED BY SS | QUANTITIES BY | CHECKED BY DSK | DATE

DOUGLAS S. KAMIYA LICENSED PROFESSIONAL ENGINEER No. 3706-C HAWAII, U.S.A.

THIS WORK WAS PREPARED BY ME OR UNDER MY SUPERVISION.

SIGNATURE — APRIL 30, 2010 DATE OF LICENSE EXPIRATION

cp&e Community Planning and Engineering, Inc.
Engineering Design | Construction Management | Infrastructure Planning
1100 Alakea Street, Sixth Floor Honolulu, Hawaii

STATE OF HAWAII
DEPARTMENT OF TRANSPORTATION
HIGHWAYS DIVISION

# EAST-WEST COLLECTOR RD.

## PLAN

North-South Road
Phase 1B
F.A.I. Proj. No. STP-8930(2)

Scale : As Shown Date : Apr. 15, 2008

SHEET No. C4.7 OF 150 SHEETS

C.O. 61S-3

| FED. ROAD DIST. NO. | STATE | FED. AID PROJ. NO. | FISCAL YEAR | SHEET NO. | TOTAL SHEETS |
|---|---|---|---|---|---|
| HAWAII | HAW. | STP-8930(2) | 2007 | C.O. 61S-4 | 331 |

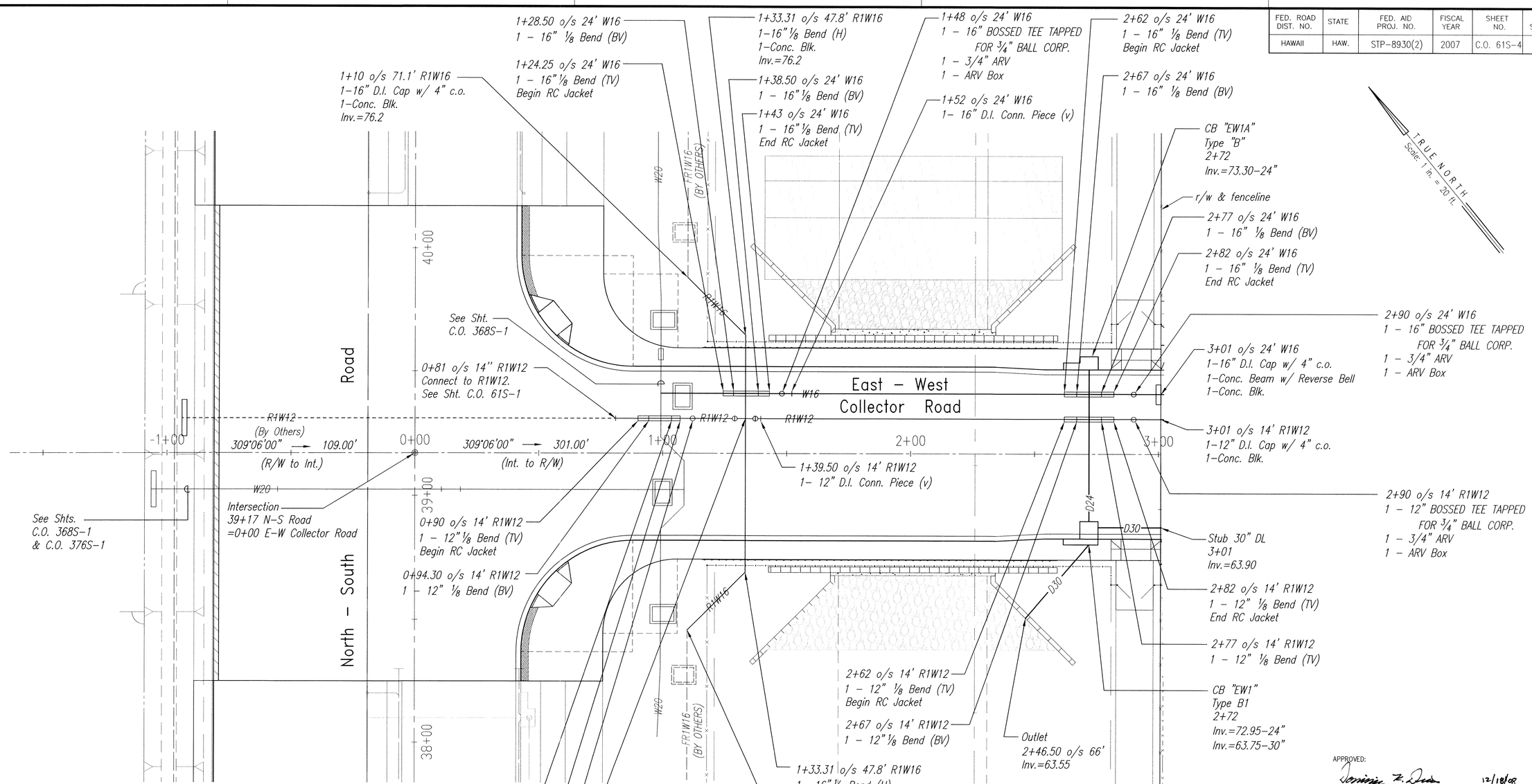


NOTES:

1. For Water Notes, See Sht. No. 362.

## Utility Plan - East-West Collector Road

Scale : 1" = 20'

| ORIGINAL PLAN | SURVEY PLOTTED BY | DATE |
|---|---|---|
| | DRAWN BY | |
| NOTE BOOK | TRACED BY | |
| | DESIGNED BY SS | |
| | QUANTITIES BY | |
| No. | CHECKED BY DSK | |

APPROVED:

CHIEF, CAPITAL PROJECTS DIVISION, B.W.S. — DATE 12/18/08

LICENSED PROFESSIONAL ENGINEER No. 3706-C DOUGLAS S. KAMIYA HAWAII, U.S.A.

THIS WORK WAS PREPARED BY ME OR UNDER MY SUPERVISION.

SIGNATURE — APRIL 30, 2010 DATE OF LICENSE EXPIRATION

cp&e Community Planning and Engineering, Inc.
Engineering Design | Construction Management | Infrastructure Planning
1100 Alakea Street, Sixth Floor Honolulu, Hawaii

STATE OF HAWAII
DEPARTMENT OF TRANSPORTATION
HIGHWAYS DIVISION

# EAST-WEST COLLECTOR RD.
## UTILITY PLAN

North-South Road
Phase 1B
F.A.I. Proj. No. STP-8930(2)

Scale : As Shown Date : Apr. 15, 2008

SHEET No. C4.7 OF 150 SHEETS

C.O. 61S-4

| FED. ROAD DIST. NO. | STATE | FED. AID PROJ. NO. | FISCAL YEAR | SHEET NO. | TOTAL SHEETS |
|---|---|---|---|---|---|
| HAWAII | HAW. | STP-8930(2) | 2007 | C.O.61S-5 | 331 |

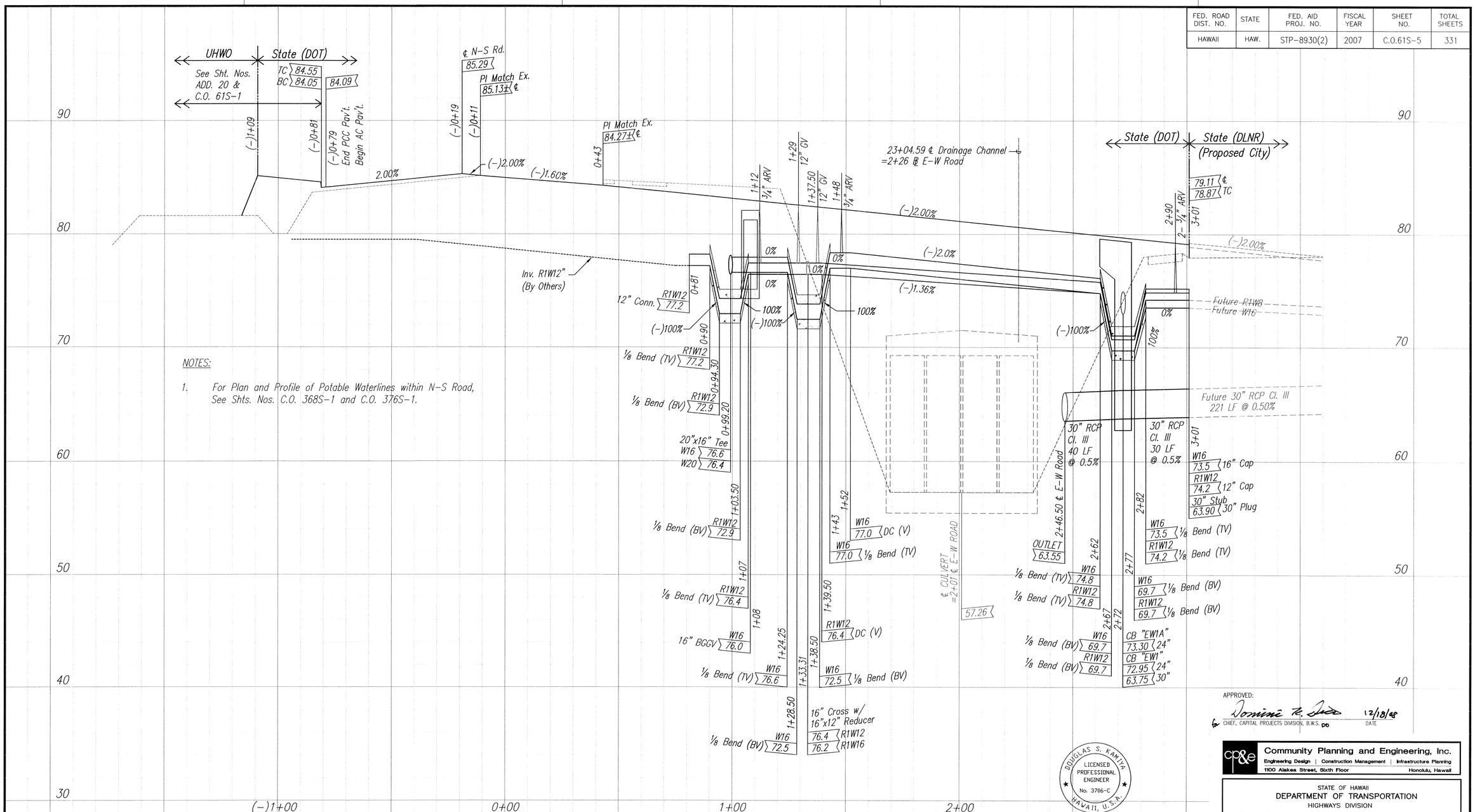


NOTES:

1. For Plan and Profile of Potable Waterlines within N-S Road, See Shts. Nos. C.O. 368S-1 and C.O. 376S-1.

## Profile – East-West Collector Road

Scale : Hor: 1" = 20'
Vert: 1" = 4'

APPROVED:

Dominic R. Sims 12/18/08
for CHIEF, CAPITAL PROJECTS DIVISION, B.W.S. DATE

DOUGLAS S. KANIYA LICENSED PROFESSIONAL ENGINEER No. 3706-C HAWAII, U.S.A.

THIS WORK WAS PREPARED BY ME OR UNDER MY SUPERVISION.

SIGNATURE — APRIL 30, 2010 DATE OF LICENSE EXPIRATION

cp&e Community Planning and Engineering, Inc.
Engineering Design | Construction Management | Infrastructure Planning
1100 Alakea Street, Sixth Floor Honolulu, Hawaii

STATE OF HAWAII
DEPARTMENT OF TRANSPORTATION
HIGHWAYS DIVISION

# EAST-WEST COLLECTOR RD.
## PROFILE

North-South Road
Phase 1B
F.A.I. Proj. No. STP-8930(2)

Scale : As Shown Date : April 15, 2008

SHEET No. C4.7 OF 150 SHEETS

C.O. 61S-5

ORIGINAL PLAN | SURVEY PLOTTED BY | DRAWN BY | TRACED BY | DESIGNED BY SS | QUANTITIES BY | CHECKED BY DSK | DATE | NOTE BOOK | No.

Projects\DHHL East-West Rd & North-South Rd Int\Construction Drawings\Government Review #5\P-P E-W Road Chnl Xing saved AC 04(GR45).dwg, Profile, 11/7/2008 11:17:46 AM, 1:1

| FED. ROAD DIST. NO. | STATE | FED. AID PROJ. NO. | FISCAL YEAR | SHEET NO. | TOTAL SHEETS |
|---|---|---|---|---|---|
| HAWAII | HAW. | STP-8930(2) | 2007 | 62 | 331 |

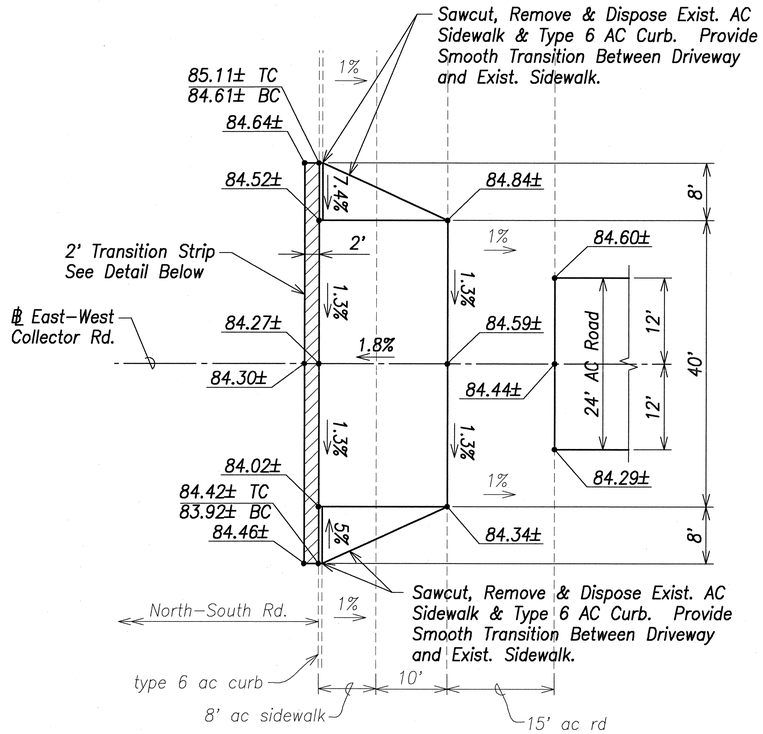


## Driveway Detail Plan
Scale: 1" = 10'

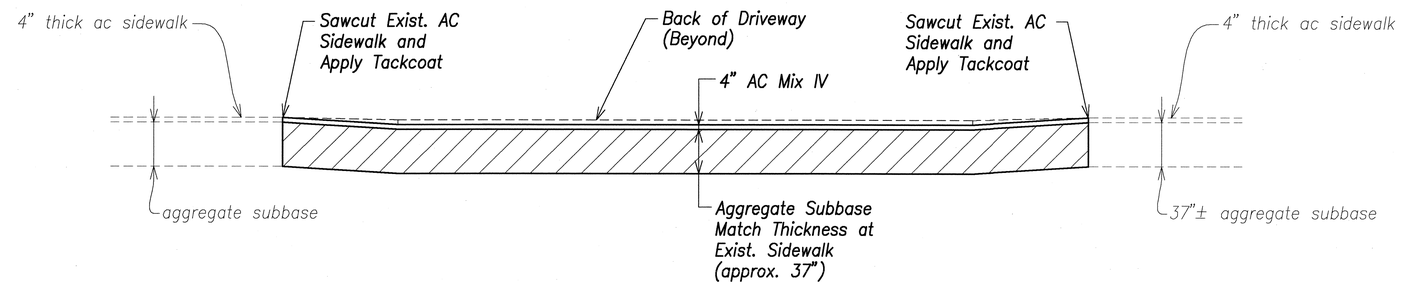


## Cross Section Detail
Scale: 1" = 5'

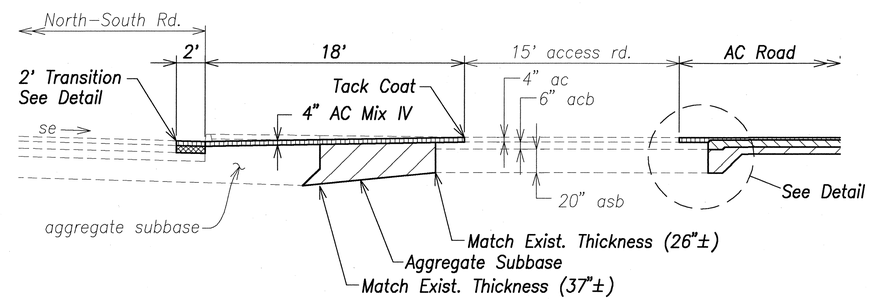


## Longitudinal Section Detail
Scale: 1" = 5'

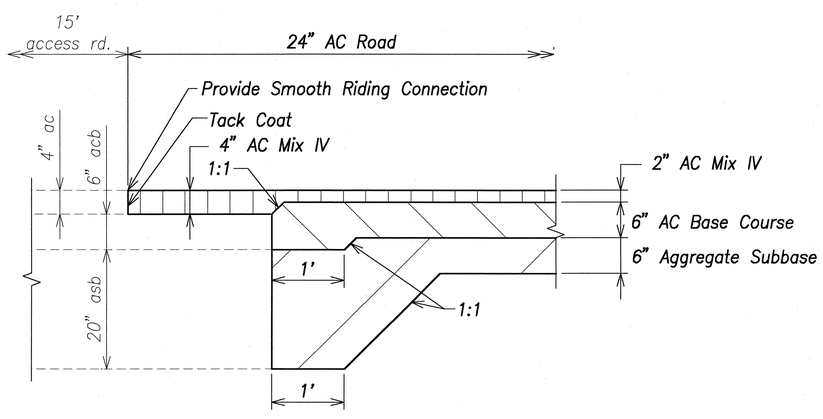


## Road Connection Detail
Scale: 1" = 1'

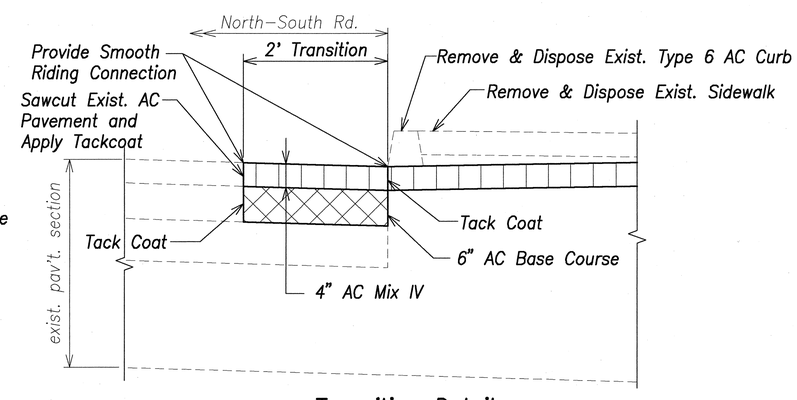


## Transition Detail
Scale: 1" = 1'

Graphic Scale:

1" = 5' 5' 2.5' 0 5' 10'

Scale in Feet

GREG H. HIYAKUMOTO LICENSED PROFESSIONAL ENGINEER No. 6662-C HAWAII, U.S.A.

THIS WORK WAS PREPARED BY ME OR UNDER MY SUPERVISION.

SIGNATURE — DATE OF LICENSE EXPIRY: APR 30, 2008

STATE OF HAWAII
DEPARTMENT OF TRANSPORTATION
HIGHWAYS DIVISION

EAST-WEST COLLECTOR ROAD
DRIVEWAY DETAIL
North-South Road
Phase 1B
F.A.I. Proj. No. STP-8930(2)

Scale: 1" = 5' Date: Feb 21, 2007

SHEET No. C4.8 OF 150 SHEETS

ORIGINAL PLAN | NOTE BOOK No. | SURVEY PLOTTED BY | DRAWN BY | TRACED BY | DESIGNED BY | QUANTITIES BY | CHECKED BY | DATE

| FED. ROAD DIST. NO. | STATE | FED. AID PROJ. NO. | FISCAL YEAR | SHEET NO. | TOTAL SHEETS |
|---|---|---|---|---|---|
| HAWAII | HAW. | STP-8930(2) | 2007 | C.O. 62 | 331 |

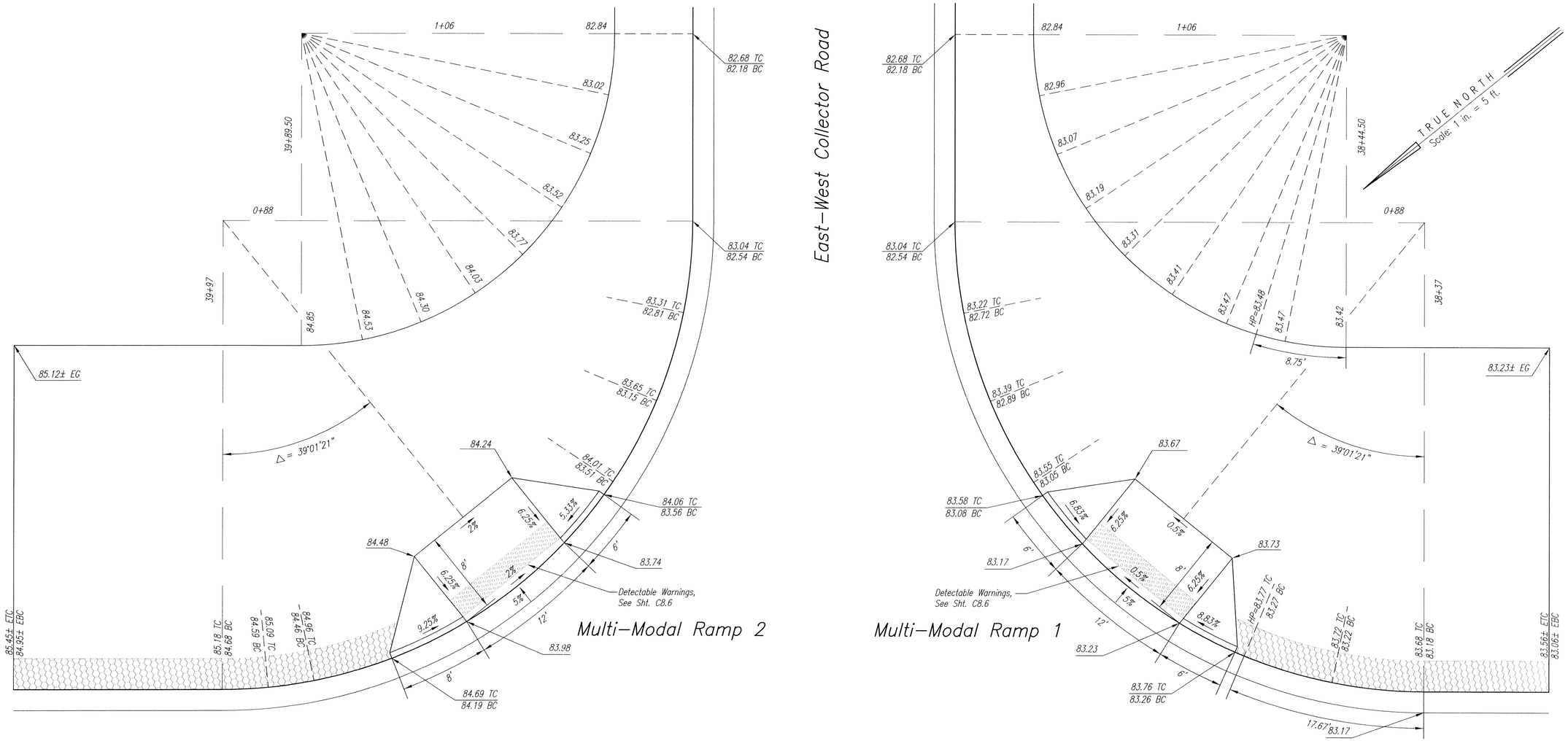


Legend

| | |
|---|---|
| 83.72 TC / 83.22 BC | Finished Top of Curb / Finished Bottom of Curb |
| 83.52 | Finished Spot Grade |

## Curb Ramps & Drwys Plan – East-West Collector Road

Scale : 1" = 5'

| | |
|---|---|
| ORIGINAL PLAN | SURVEY PLOTTED BY ____ DATE |
| | DRAWN BY ____ |
| | TRACED BY ____ |
| | DESIGNED BY SS |
| NOTE BOOK | QUANTITIES BY ____ |
| | CHECKED BY ____ DISK |
| No. ____ | |

DOUGLAS S. KAMIYA
LICENSED PROFESSIONAL ENGINEER
No. 3706-C
HAWAII, U.S.A.

THIS WORK WAS PREPARED BY ME OR UNDER MY SUPERVISION.

SIGNATURE — APRIL 30, 2010 DATE OF LICENSE EXPIRATION

cp&e Community Planning and Engineering, Inc.
Engineering Design | Construction Management | Infrastructure Planning
1100 Alakea Street, Sixth Floor — Honolulu, Hawaii

STATE OF HAWAII
DEPARTMENT OF TRANSPORTATION
HIGHWAYS DIVISION

# EAST-WEST COLLECTOR RD.
# CURB RAMPS & DRWYS PLAN

North-South Road
Phase 1B
F.A.I. Proj. No. STP-8930(2)

Scale : As Shown — Date : Apr. 15, 2008

SHEET No. C4.8 OF 150 SHEETS

C.O. 62