FED. ROAD DIST. NO.	STATE	FED. AID PROJ. NO.	FISCAL YEAR	SHEET NO.	TOTAL SHEETS
HAWAII	HAW.	STP-8930(1)	2005	C.O. 68	144

INDEX TO STRUCTURAL DRAWINGS

SHEET NO.	DESCRIPTION
S0.1	INDEX TO STRUCTURAL DRAWINGS
S0.2	ESTIMATED QUANTITIES
S0.3	STRUCTURAL GENERAL NOTES
S0.4	SYMBOLS AND ABBREVIATIONS
~~S1.1~~	~~DRAIN CULVERT "C" - LAYOUT PLAN AND SECTION~~
~~S1.2~~	~~DRAIN CULVERT "C" - TOP SLAB PLAN AT DI 17 AND SECTION~~
~~S1.3~~	~~DRAIN CULVERT "C" - TOP SLAB PLAN AT DI 16 AND SECTION~~
~~S1.4~~	~~DRAIN CULVERT "C" - SECTIONS~~
~~S1.5~~	~~DRAIN CULVERT "C" - TOP SLAB PLAN AT DMH 18 AND SECTION~~
~~S1.6~~	~~DRAIN CULVERT "C" - TOP SLAB PLAN AT DMH 18 AND SECTIONS~~
S2.1	DRAIN CULVERT "D" - LAYOUT PLAN, TOP SLAB PLAN AT DI 26 SECTION AND DETAIL
S2.2	DRAIN CULVERT "D" - TOP SLAB PLAN AT DI 25, SECTION AND DETAIL
S2.3	DRAIN CULVERT "D" - SECTIONS
S3.1	DRAIN CULVERT TYPICAL DETAILS AND SECTIONS
~~S3.2~~	~~DRAIN CULVERT "C" OUTLET LAYOUT PLAN AND SECTION~~
S3.3	DRAIN CULVERT "D" OUTLET LAYOUT PLAN AND SECTION
S3.4	DRAIN CULVERT "D" OUTLET SECTIONS AND TYPICAL DETAILS
S3.5	DRAIN CULVERT "D" OUTLET SECTION
S3.6	DRAIN CULVERT "D" OUTLET SECTION
S4.1	DRAIN CULVERT "E" - LAYOUT PLAN AND SECTIONS AT DI 33
S4.2	DRAIN CULVERT "F" - LAYOUT PLAN AND SECTIONS AT DI 37
S4.3	DRAIN CULVERT "G" - LAYOUT PLAN AND SECTIONS AT DI 42
S4.4	DRAIN CULVERT "RI" - LAYOUT PLAN
S4.5	DRAIN CULVERT "E", "F" AND "G" - SECTIONS
S4.6	DRAIN CULVERT "E", "F" AND "G" - SECTIONS
S5.1	DRAIN CULVERT "E" - SECTIONS AT DI 34
S5.2	DRAIN CULVERT "E" - SECTIONS AT DI 34
S5.3	DRAIN CULVERT "F" - SECTIONS AT DI 38
S5.4	DRAIN CULVERT "G" - SECTIONS AT DI 43
S5.5	DRAIN CULVERT "F" AND "G" - SECTIONS AT DI 38 AND 43
S5.6	DRAIN CULVERT "E", "F" AND "G" - SECTIONS
S5.7	DRAIN CULVERT "E", "F" AND "G" - SECTION

SHEET NO.	DESCRIPTION
S5.8	DRAIN CULVERT "RI" - SECTIONS AND DETAIL AT DI 24
S5.9	DRAIN INLET FRAME AT 24, 26, 34, 38 AND 43
S6.1	DRAIN CULVERT "E", "F", "G" AND "RI" OUTLET - LAYOUT PLAN AND SECTIONS
S6.2	DRAIN CULVERT "E", "F", "G" AND "RI" OUTLET - SECTIONS
S6.3	TYPICAL GRP APRON SECTIONS AND DETAIL
S6.4	TYPICAL ADDED REINFORCING AT PIPE OPENING SECTIONS
S7.1	BOX CULVERT OUTLET EXCAVATION AND PAY LIMITS
S7.2	RC PIPE CULVERT OUTLET EXCAVATION AND PAY LIMITS
S8.1	TYPICAL LIGHT POLE FOUNDATION
S8.2	TYPICAL LIGHT POLE FOUNDATION
S8.3	LIGHT POLE STRUCTURE EXCAVATION PAY LIMITS
S9.1	STRUCTURAL GENERAL NOTES AND TYPICAL DETAILS
S9.2	NEW MAINTENANCE MANHOLE TYPICAL PLANS AND SECTIONS
S9.3	MAINTENANCE MANHOLE EXTENSION SECTIONS
S9.4	MAINTENANCE MANHOLE WALL ELEVATION

ORIGINAL PLAN	SURVEY PLOTTED BY	DATE
	DRAWN BY	"
NOTE BOOK	TRACED BY	"
	DESIGNED BY	"
	QUANTITIES BY	"
No.	CHECKED BY	"

DAVID K. FUJIWARA
LICENSED PROFESSIONAL ENGINEER
NO. 8104-S
HAWAII, U.S.A.

THIS WORK WAS PREPARED BY ME OR UNDER MY SUPERVISION.

SIGNATURE — EXPIRATION DATE OF THE LICENSE 4-30-06

DATE	REVISION
6/21/06	Remove and Revise Description per SDOT

STATE OF HAWAII
DEPARTMENT OF TRANSPORTATION
HIGHWAYS DIVISION

INDEX TO STRUCTURAL DRAWINGS

North-South Road
Phase 1A
F.A.I. Proj. No. STP-8930(1)

Scale: As Noted — Date: Dec. 22, 2004

SHEET No. S0.1 OF 43 SHEETS

C.O. 68

FED. ROAD DIST. NO.	STATE	FED. AID PROJ. NO.	FISCAL YEAR	SHEET NO.	TOTAL SHEETS
HAWAII	HAW.	STP-8930(1)	2005	C.O.ADD. 69	144

ESTIMATED QUANTITIES

	ITEM NO.	ITEM	QUANTITY	UNIT
1	~~206.3000~~	~~Structure Excavation for Drain Culvert "C"~~	~~3,950~~	~~CY~~
1	206.3001	Structure Excavation for Drain Culvert "D"	3,020	CY
1	~~206.4000~~	~~Structure Excavation for Drain Culvert "C" Outlet Structure~~	~~150~~	~~CY~~
1	206.4001	Structure Excavation for Drain Culvert "D" Outlet Structure	90	CY
1	206.4002	Structure Excavation for Drain Culvert "E" Outlet Structure	55	CY
1	206.4003	Structure Excavation for Drain Culvert "F" Outlet Structure	60	CY
1	206.4004	Structure Excavation for Drain Culvert "G" Outlet Structure	60	CY
1	206.5000	Structure Excavation for Drain Culvert "RI" Outlet Structure	50	CY
1	206.5001	Structure Excavation for Light Pole Pile Cap and Pedestal	80	CY
	~~503.1080~~	~~Concrete for Drain Culvert "C"~~	~~LS~~	~~LS~~
	503.1081	Concrete for Drain Culvert "D"	LS	LS
	~~503.1082~~	~~Concrete for Drain Culvert "C" Outlet Structure~~	~~LS~~	~~LS~~
	503.1083	Concrete for Drain Culvert "D" Outlet Structure	LS	LS
	503.1084	Concrete for Drain Culvert "E" Outlet Structure	LS	LS
	503.1085	Concrete for Drain Culvert "F" Outlet Structure	LS	LS
	503.1086	Concrete for Drain Culvert "G" Outlet Structure	LS	LS
	503.1087	Concrete for Drain Culvert "RI" Outlet Structure	LS	LS
	503.1088	Concrete for Light Pole Pile Cap and Pedestal	LS	LS
	~~602.0090~~	~~Reinforcing Steel for Drain Culvert "C"~~	~~LS~~	~~LS~~
	602.0091	Reinforcing Steel for Drain Culvert "D"	LS	LS
1	~~602.0092~~	~~Reinforcing Steel for Drain Culvert "C" Outlet Structure~~	~~LS~~	~~LS~~
1	602.0093	Reinforcing Steel for Drain Culvert "D" Outlet Structure	LS	LS
1	602.0094	Reinforcing Steel for Drain Culvert "E" Outlet Structure	LS	LS
1	602.0095	Reinforcing Steel for Drain Culvert "F" Outlet Structure	LS	LS
1	602.0096	Reinforcing Steel for Drain Culvert "G" Outlet Structure	LS	LS
1	602.0097	Reinforcing Steel for Drain Culvert "RI" Outlet Structure	LS	LS
	602.0098	Reinforcing Steel for Light Pole Cap and Pedestal	LS	LS
1	603.2000	Bed Course Material for Drain Culvert "D"	160	CY
1	603.2001	Bed Course Material for Drain Culvert "D" Outlet Structures	40	CY
1	603.2002	Bed Course Material for Drain Culvert "E", Drain Culvert "F", Drain Culvert "G" and Drain Culvert "RI" Outlet Structures	50	CY

DATE	REVISION
6/21/06	Remove & Revise Items per SDOT
1/18/05	1 Clarification

ORIGINAL PLAN
SURVEY PLOTTED BY
DRAWN BY
TRACED BY
DESIGNED BY
QUANTITIES BY
CHECKED BY
DATE
NOTE BOOK
No.

DAVID K. FUJIWARA
LICENSED PROFESSIONAL ENGINEER
NO. 8104-S
HAWAII, U.S.A.

THIS WORK WAS PREPARED BY ME OR UNDER MY SUPERVISION.

SIGNATURE — EXPIRATION DATE OF THE LICENSE 4-30-06

STATE OF HAWAII
DEPARTMENT OF TRANSPORTATION
HIGHWAYS DIVISION

ESTIMATED QUANTITIES

North-South Road
Phase 1A
F.A.I. Proj. No. STP-8930(1)

Scale: As Noted — Date: Dec. 22, 2004

SHEET No. S0.2 OF 43 SHEETS

C.O.ADD. 69

FED. ROAD DIST. NO.	STATE	FED. AID PROJ. NO.	FISCAL YEAR	SHEET NO.	TOTAL SHEETS
HAWAII	HAW.	STP-8930(1)	2005	ADD. 70	144

STRUCTURAL GENERAL NOTES

1. General Specifications: Hawaii Department of Transportation, Standard Specifications for Road and Bridge and Public Works Construction, 1994, together with Special Provisions prepared for this contract. /1

2. Design Specifications: AASHTO 1998 LRFD Bridge Design Specifications (Second Edition) and its subsequent interim specifications with interim supplements and modifications by the Highways Division, Department of Transportation, State of Hawaii.

3. Loads:

   (A) Dead Load: An allowance of 25 PSF for future wearing surface of asphalt concrete has been provided for in the design.

   (B) Live Load: AASHTO HL-93 Truck Loading

   (C) Seismic Loads: Acceleration coefficient – 0.16
   Seismic Performance Zone – 2
   Importance Category – Critical
   Soil Profile – Type II

   (D) Wind Load: 105 mph. Value is a 3 second gust speed at 32.8 ft above ground for Exposure C category and is associated with an annual probability of 0.02 (50 year mean recurrence interval).

4. Materials:

   (A) All concrete strengths shall be as noted below:

Item No.	Structural Parts	Classes of Concrete	Specified Compressive Strength, f'c (28 Days)
(1)	Box Culverts	–	4000 PSI
(2)	Culvert Outlets	–	4000 PSI
(3)	Wing Walls	–	4000 PSI
(4)	Light pole foundation	–	4000 PSI
(5)	Except as noted otherwise, all others	A	3000 PSI

   All concrete with a 28 day compressive strength of 4000 psi or greater shall have a maximum W/C Ratio of 0.45. The W/C Ratio for Class concrete shall follow the Standard Specifications.

   (B) All reinforcing steel shall be ASTM A615 Grade 60 unless otherwise noted.

   (C) Reinforcing steel shall be ASTM A706 where welded connections are required.

   (D) All structural steel shall be ASTM A36 hot dip galvanized after fabrication, unless otherwise noted.

   (E) All anchor bolts, washers and nuts shall be ASTM A325 hot dip galvanized after fabrication, unless otherwise specified.

5. Reinforcement:

   (A) The minimum covering measured from the surface of the concrete to the face of any reinforcing bars shall be as follows, except as otherwise shown:

   (1) Concrete cast against and permanently exposed to earth = 3"

   (2) All others unless otherwise noted = 2".

   (B) Reinforcing bars shall be detailed in accordance with the latest edition of the design specification in note 2 unless otherwise noted.

   (C) Minimum clear spacing between parallel bars shall be 1 1/2 times the diameter of bars (for non bundled bars). In no case shall the clear distance between the bars be less than 1 1/2 times the maximum size of the coarse aggregate or 1 1/2".

5. Reinforcement: (Cont.)

   (D) All dimensions relating to reinforcing bars are to centers of bars unless otherwise noted.

   (E) Reinforcing bars shall be securely tied at all intersections and lap splices except where the spacing of intersections is less than one foot in each direction, in which case alternate intersections shall be tied.

6. Stainless Steel Reinforcing Steel

   (A) Stainless steel bars for concrete reinforcement shall be deformed stainless steel bars Type 316L (UNS S31603) corrosion resistant anneal, Grade 60 conforming to ASTM A955.

   (B) Stainless steel reinforcing shall not be in contact with any material other than concrete or plastic.

7. Construction Notes:

   (A) See Standard Specifications and Special Provisions.

   (B) Except as otherwise noted, all vertical dimensions are measured plumb.

   (C) The Contractor shall verify all site conditions and not rely upon these plans for stream location, etc. Conditions may differ from those shown.

   (D) The Contractor shall verify the location of all utility lines and notify the respective owners before commencing with excavation, and any temporary piling or sheeting.

   (E) For concrete finish see Standard Specifications and Special Provisions.

   (F) Construction joints may be relocated or additional ones added subject to the approval of the Engineer.

   (G) Unless otherwise noted, all exposed concrete edges shall be chamfered 3/4"x3/4".

   (H) Contractor shall verify elevations before fabricating wall reinforcing.

8. General:

   (A) Standard detail drawings refer to all structures in general, except for modifications as may be required for special conditions. For such modifications refer to the corresponding detailed drawings.

9. Foundation:

   (A) Active pressure = 40 pcf

   (B) At-rest pressure = 90 pcf

   (C) Earthquake load (active condition) = $6.5H^2$ (lb./ft.)

   (D) Earthquake load (at-rest condition) = $10.6H^2$ (lb./ft.) /1

   (E) Bearing Pressure at bottom culvert

   (A) Extreme event limit state = 18 ksf

   (B) Strength limit state = 9 ksf

   (C) Service limit state = 6 ksf

/1 For additional information, see soils report dated September 10, 2004 by Geolabs, Inc.

DATE	REVISION
1/18/05	/1 Clarification

DAVID K. FUJIWARA
LICENSED PROFESSIONAL ENGINEER
NO. 8104-S
HAWAII, U.S.A.

THIS WORK WAS PREPARED BY ME OR UNDER MY SUPERVISION.

SIGNATURE — EXPIRATION DATE OF THE LICENSE 4-30-06

STATE OF HAWAII
DEPARTMENT OF TRANSPORTATION
HIGHWAYS DIVISION

STRUCTURAL GENERAL NOTES

North-South Road
Phase 1A
F.A.I. Proj. No. STP-8930(1)

Scale: None — Date: Dec. 22, 2004

SHEET No. S0.3 OF 43 SHEETS

ADD. 70

ORIGINAL PLAN — NOTE BOOK No. — SURVEY PLOTTED BY — DRAWN BY — TRACED BY — DESIGNED BY — QUANTITIES BY — CHECKED BY — DATE

NS-S03.DWG
PLOT 1 = 1

C:\KSF05\01-17-05 ADD1\NS-S03 ADD1.dwg, 1/17/2005 11:21:11 AM, KSFrcpc3, 1:1

FED. ROAD DIST. NO.	STATE	FED. AID PROJ. NO.	FISCAL YEAR	SHEET NO.	TOTAL SHEETS
HAWAII	HAW.	STP-8930(1)	2005	ADD. 71	144

SYMBOLS AND ABBREVIATIONS

&	And
@	At
ø	Diameter
≥	Greater Than or Equal to
≤	Less Than or Equal to
#	Number
Abut.	Abutment
Abbr.	Abbreviation
Add.	Additional
Alt.	Alternate
AB	Anchor Bolt
AC	Asphaltic Concrete
Approx.	Approximate
Az.	Azimuth
Bk.	Back
Bal.	Balance
℄	Baseline
Bm.	Beam
Brg., Brgs.	Bearing, Bearings
BVC	Beginning of Vertical Curve
Bet.	Between
BF	Both Faces
BW	Both Ways
BFE	Bottom of Footing Elevation
Bot., Bott., B	Bottom
Br.	Bridge
Blt.	Bolt
Cant.	Cantilever
CIP	Cast Iron Pipe
℄	Center line
CG	Center of Gravity
cc	Center to Center
Cl.	Class
Clr.	Clearance
CO	Clean Out
Col.	Column
Conc.	Concrete
CBW	Concrete Barrier Wall
CMU	Concrete Masonry Unit
Conn.	Connection
Const.	Construction
CJ	Construction Joint
Cntl. Jt.	Control Joint
CLSM	Controlled Low Strength Material
Cont.	Continuous
CSL	Cross Hole Sonic Loggin
CF	Cubic Feet
CY, Cu. Yd.	Cubic Yard
Det.	Detail
Dia.	Diameter
Diaph.	Diaphragm
Dim.	Dimension
Dist.	Distance
DO	Ditto
Dwls.	Dowels
Dn.	Down
Dbl.	Double
DI	Drain Inlet, Ductile Iron
1 DMH	Drain Manhole
Dwg., Dwgs.	Drawing, Drawings
DS	Drilled Shaft
E	East
EA, Ea., ea.	Each
EF	Each Face
EFH	Each Face Horizontal
EFV	Each Face Vertical
EW	Each Way
EPE	Existing Edge of Pavement
EPS	Expanded Polystyrene
ES	Edge of Shoulder
Elec.	Electrical
EMH	Electrical Manhole
El., Elev.	Elevation
Emb.	Embankment
EVC	End of Vertical Curve
Eq.	Equal
Est.	Estimated
Exc.	Excavation
Excl.	Excluding
Exist., Ex.	Existing
Exp., (E)	Expansion
EJ	Expansion Joint
Ext.	Exterior
FF	Far Face. Front Face
f'c	Specified Compressive Strength of Concrete at 28 days
f'ci	Specified Compressive Strength of Concrete at Time of Initial Prestress
Ft.	Feet, Foot
Fig.	Figure
Fin. Gr.	Finish Grade
(F)	Fixed
FB	Flat Bar
Ftg.	Footing
FA	Force account
Ga.	Gage, Gauge
Galv.	Galvanized
G, Gir.	Girder
GDI	Grated Drain Inlet
GFRP	Glass Fiber Reinforced Polymer
Gr.	Grade
Grd.	Ground
GRP	Grouted Rubble Pavement
Ht.	Height
(H)	Hinge
Horiz., H	Horizontal
HDOT	State of Hawaii Department of Transportation
HDPE	High Density Polyethylene
HS	High strength
HECO	Hawaiian Electric Company
IB	Inbound
In.	Inch
ID	Inside Diameter
IF	Inside Face
Int.	Interior
Inv.	Invert
Jt.	Joint
K	Kips
KF	Kip Foot
KSF	Kips Per Square Foot
KSI	Kips Per Square Inch
KLF	Kips Per Linear Foot
L	Length
lb., lbs., LBS.	Pound, Pounds
Ltg. Std.	Lighting Standard
LF, Lin. Ft.	Linear Feet/Foot
LS	Lump Sum
Longit.	Longitudinal
M	Modified
MH	Manhole
Max.	Maximum
Mech.	Mechanical
Min.	Minimum
Misc.	Miscellaneous
MPH	Miles Per Hour
NF	Near Face
N	North
NIC	Not in Contract
No.	Number
NTS	Not to Scale
O/S	Offset
oc	On Center
Opn'g	Opening
OB	Outbound
OD	Outside Diameter
OG	Outside Girder, Outbound Girder
Perf.	Perforated
PL	Plate
PCC	Portland Cement Concrete
PC	Point of Curvature
PCF	Pounds per Cubic Foot
PPM	Parts Per Million
PSF	Pounds per Square Foot
PSI	Pounds per Square Inch
PLF	Pounds per Linear Foot
PI	Point of Intersection of Tangents
PIVC	Point of Intersection of Vertical Curve
PT	Point of Tangency
Pt., Pts.	Point, Points
PRC	Point of Reverse Curvature
PVC	Polyvinyl Chloride
Prestr.	Prestressed
P/S	Prestressed Strands
PB	Pull Box
Rad., R	Radius
RF	Rear Face
1 RC	Reinforced Concrete
1 RCP	Reinforced Concrete Pipe
Rebar	Reinforcing Bar
Ref.	Reference
Reinf.	Reinforced, Reinforcing, Reinforcement
Req'd.	Required
Ret.	Retaining
ROW	Right of Way
Rdwy.	Roadway
Sect.	Section
SRW	Segmental Retaining Wall
Sht.	Sheet
Sim.	Similar
Sl.	Slope
S	South
Spc., Spg.	Spaces, Spacing
Sprd.	Spread
Spec.	Specification
SF	Square Feet
SY	Square Yard
SS	Stainless Steel
Std.	Standard
Sta.	Station
Stiff.	Stiffener
Stirr.	Stirrup
Stl.	Steel
Str.	Straight
Struct.	Structure
SE	Super Elevation
Symm.	Symmetrical
Tan.	Tangent
Temp.	Temporary
Thk.	Thick
T	Top
T&B	Top and Bottom
TCE	Top of Column (and Bent Cap Soffit) Elevation
TOD	Top of Deck
TFE	Top of Footing Elevation
Tot.	Total
Transv.	Transverse
TS	Structural Tubing
Typ.	Typical
Undergrd.	Underground
Var.	Varies
Vert., V	Vertical
VC	Vertical Curve
W/C	Water/Cement
w/	With
W	West
WWF	Welded Wire Fabric
WW	Wingwall
WP	Work Point, Working Point
WS	Water Surface
Yr.	Year

DATE	REVISION
1/18/05	1 Addition to Abbreviation

DAVID K. FUJIWARA
LICENSED PROFESSIONAL ENGINEER
NO. 8104-S
HAWAII, U.S.A.

THIS WORK WAS PREPARED BY ME OR UNDER MY SUPERVISION.

SIGNATURE — EXPIRATION DATE OF THE LICENSE 4-30-06

STATE OF HAWAII
DEPARTMENT OF TRANSPORTATION
HIGHWAYS DIVISION

SYMBOLS AND ABBREVIATIONS

North-South Road
Phase 1A
F.A.I. Proj. No. STP-8930(1)

Scale: None — Date: Dec. 22, 2004

SHEET No. S0.4 OF 43 SHEETS

ADD. 71

ORIGINAL PLAN — NOTE BOOK No. — SURVEY PLOTTED BY — DRAWN BY — TRACED BY — DESIGNED BY — QUANTITIES BY — CHECKED BY — DATE

NS-S04.DWG
PLOT 1 = 1

C:\KSF05\01-17-05 AJJ\NS-S04 ADD.dwg, 1/17/2005 11:22:50 AM, KSFinnie3, 1:1

FED. ROAD DIST. NO.	STATE	FED. AID PROJ. NO.	FISCAL YEAR	SHEET NO.	TOTAL SHEETS
HAWAII	HAW.	STP-8930(1)	2005	C.O.ADD. 72	144

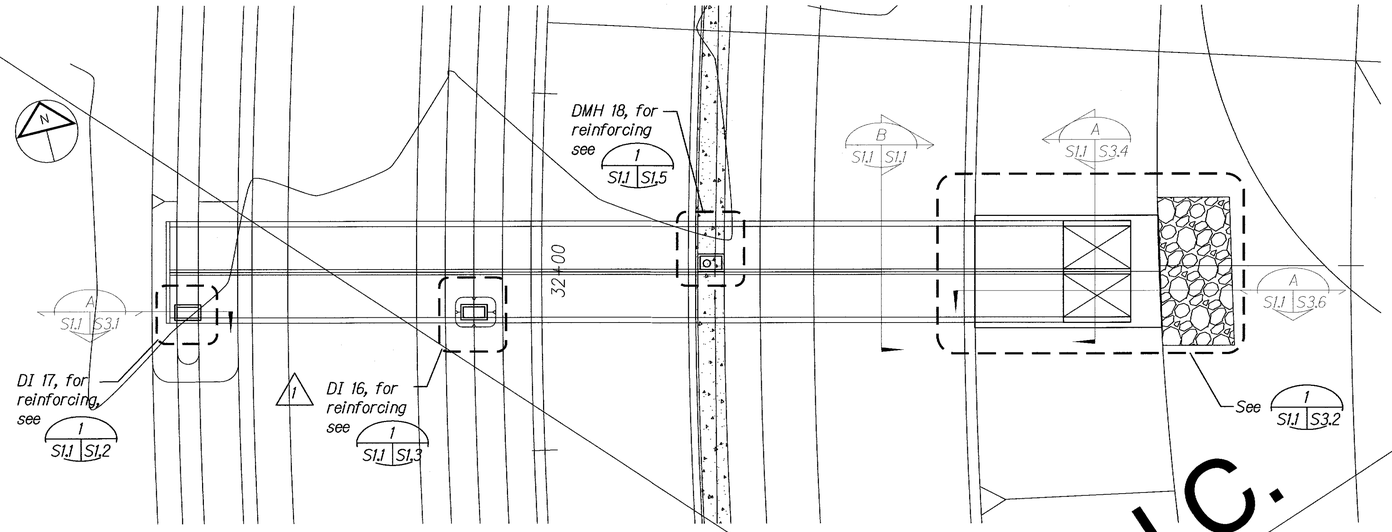

N.I.C.

Notes:

1. Construction joints shall be spaced at a maximum of 60'-0" and control joints shall be spaced at a maximum of 20'-0". 1
2. Refer to sheet S3.1 for construction and control joint details.
3. Refer to civil drawings for Culvert, DI, DMH and Outlet profile dimensions and elevations. 1

DRAIN CULVERT "C" - LAYOUT PLAN (A S1.1 S1.1)

SCALE: 1" = 20'

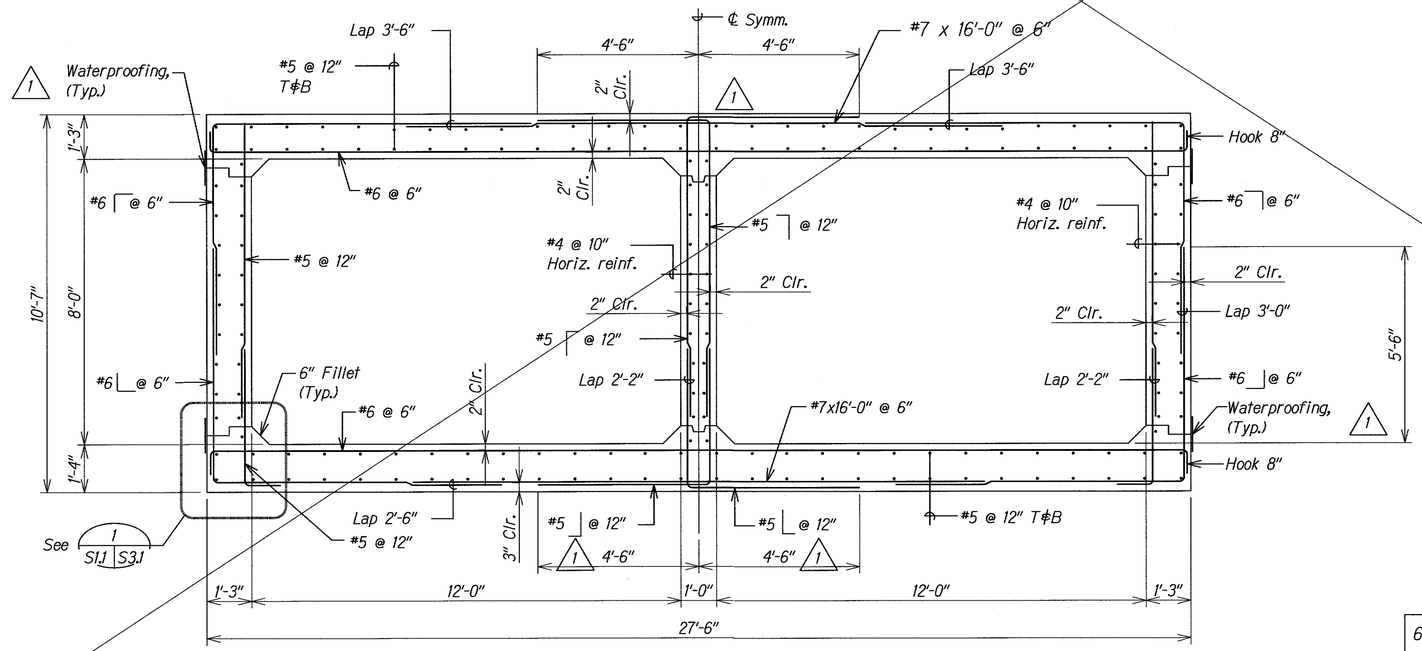

DRAIN CULVERT "C" - TYPICAL SECTION (B S1.1 S1.1)

SCALE: 1/2" = 1'-0"

DATE	REVISION
6/21/06	Delete Sheet per SDOT
1/18/05	1 Clarification of Notes and Added Dimensions

DAVID K. FUJIWARA LICENSED PROFESSIONAL ENGINEER NO. 8104-S HAWAII, U.S.A.

THIS WORK WAS PREPARED BY ME OR UNDER MY SUPERVISION.

SIGNATURE — EXPIRATION DATE OF THE LICENSE 4-30-06

STATE OF HAWAII
DEPARTMENT OF TRANSPORTATION
HIGHWAYS DIVISION

DRAIN CULVERT "C" - LAYOUT PLAN AND SECTION

North-South Road
Phase 1A
F.A.I. Proj. No. STP-8930(1)

Scale: As Noted — Date: Dec. 22, 2004

SHEET No. S1.1 OF 43 SHEETS

ORIGINAL PLAN — SURVEY PLOTTED BY — DRAWN BY — TRACED BY — DESIGNED BY — QUANTITIES BY — CHECKED BY — DATE — NOTE BOOK No.

C.O.ADD. 72

FED. ROAD DIST. NO.	STATE	FED. AID PROJ. NO.	FISCAL YEAR	SHEET NO.	TOTAL SHEETS
HAWAII	HAW.	STP-8930(1)	2005	C.O. ADD. 73	144

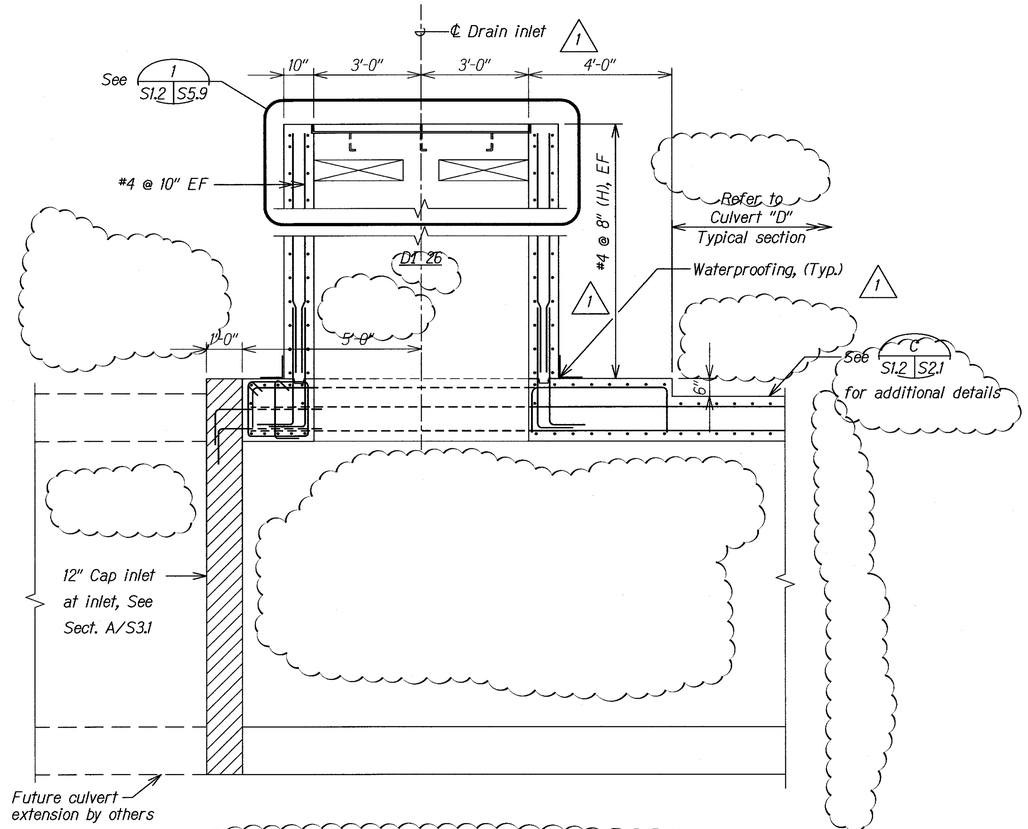

DRAIN CULVERT "D" - SECTION A

SCALE: 1/2" = 1'-0"

S2.3 S1.2

DAVID K. FUJIWARA
LICENSED PROFESSIONAL ENGINEER
NO. 8104-S
HAWAII, U.S.A.

THIS WORK WAS PREPARED BY ME OR UNDER MY SUPERVISION.

SIGNATURE — EXPIRATION DATE OF THE LICENSE 6-30-08

STATE OF HAWAII
DEPARTMENT OF TRANSPORTATION
HIGHWAYS DIVISION

DRAIN CULVERT "D" - SECTION AT DI 26

North-South Road
Phase 1A
F.A.I. Proj. No. STP-8930(1)

Scale: As Noted — Date: Dec. 22, 2004

SHEET No. S1.2 OF 43 SHEETS

DATE	REVISION
6/21/06	Remove & Revise Detail per SDOT
1/18/05	1 Clarification of Notes

ORIGINAL PLAN
NOTE BOOK No.
SURVEY PLOTTED BY ____ DATE
DRAWN BY "
TRACED BY "
DESIGNED BY "
QUANTITIES BY "
CHECKED BY "

C.O. ADD. 73

FED. ROAD DIST. NO.	STATE	FED. AID PROJ. NO.	FISCAL YEAR	SHEET NO.	TOTAL SHEETS
HAWAII	HAW.	STP-8930(1)	2005	ADD. 74	144

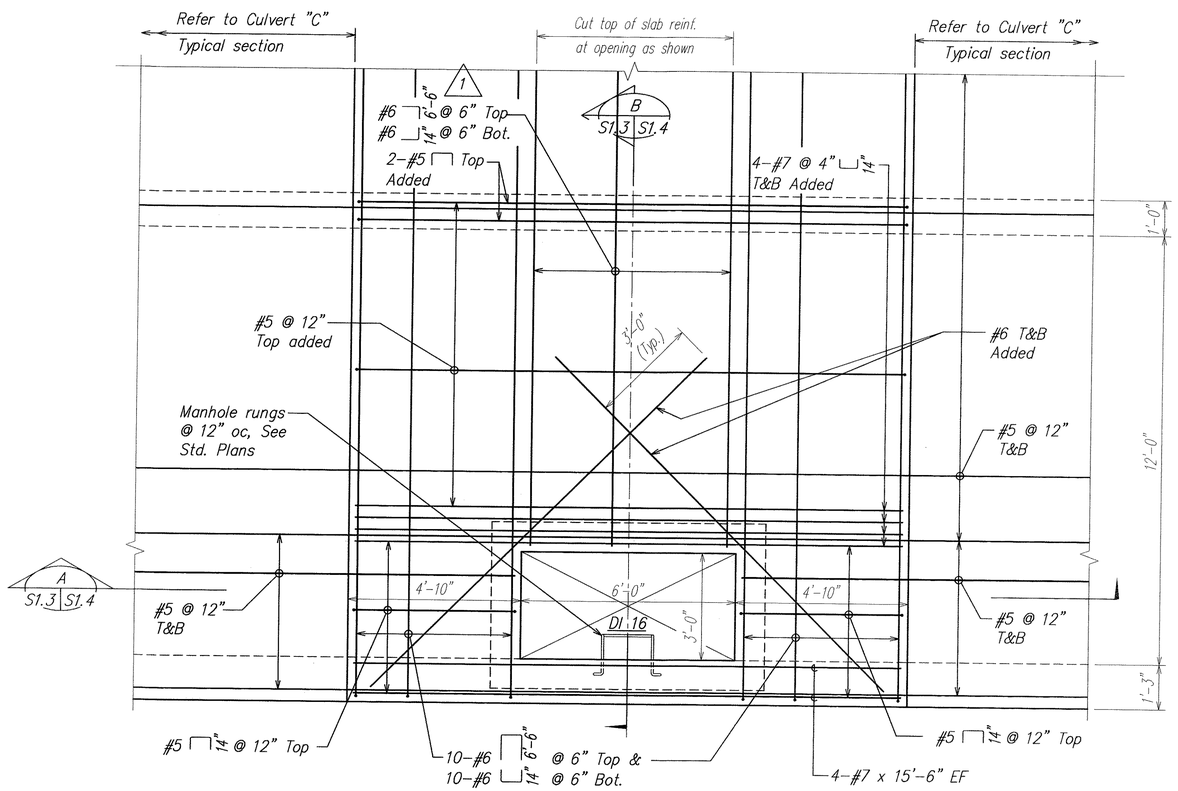

DRAIN CULVERT "C" – TOP SLAB PLAN AT DI 16 (1 / S1.1 S1.3)

SCALE: 1/2" = 1'-0"

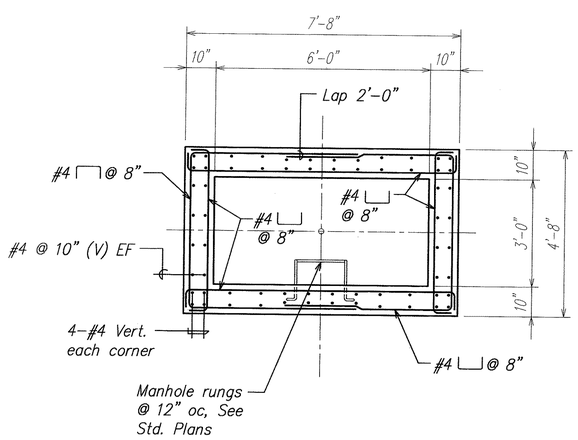

SECTION (A / S1.2, S1.4 S1.3)

SCALE: 1/2" = 1'-0"

1

ORIGINAL PLAN	SURVEY PLOTTED BY	DATE
	DRAWN BY	
NOTE BOOK	TRACED BY	
	DESIGNED BY	
No.	QUANTITIES BY	
	CHECKED BY	

DAVID K. FUJIWARA
LICENSED PROFESSIONAL ENGINEER
NO. 8104-S
HAWAII, U.S.A.

THIS WORK WAS PREPARED BY ME OR UNDER MY SUPERVISION.

David K. Fujiwara 4-30-06

SIGNATURE — EXPIRATION DATE OF THE LICENSE

DATE	REVISION
1/18/05	1 Clarification of Notes

STATE OF HAWAII
DEPARTMENT OF TRANSPORTATION
HIGHWAYS DIVISION

DRAIN CULVERT "C" – TOP SLAB PLAN AT DI 16, AND SECTION

North–South Road
Phase 1A
F.A.I. Proj. No. STP–8930(1)

Scale: As Noted — Date: Dec. 22, 2004

SHEET No. S1.3 OF 43 SHEETS

NS-S103.DWG
PLOT 1 = 1

C:\KS\F05\01-17-05 ADD1\NS-S103 ADD1.dwg, 1/17/2005 11:26:53 AM, KS

ADD. 74

FED. ROAD DIST. NO.	STATE	FED. AID PROJ. NO.	FISCAL YEAR	SHEET NO.	TOTAL SHEETS
HAWAII	HAW.	STP-8930(1)	2005	C.O.ADD. 75	144

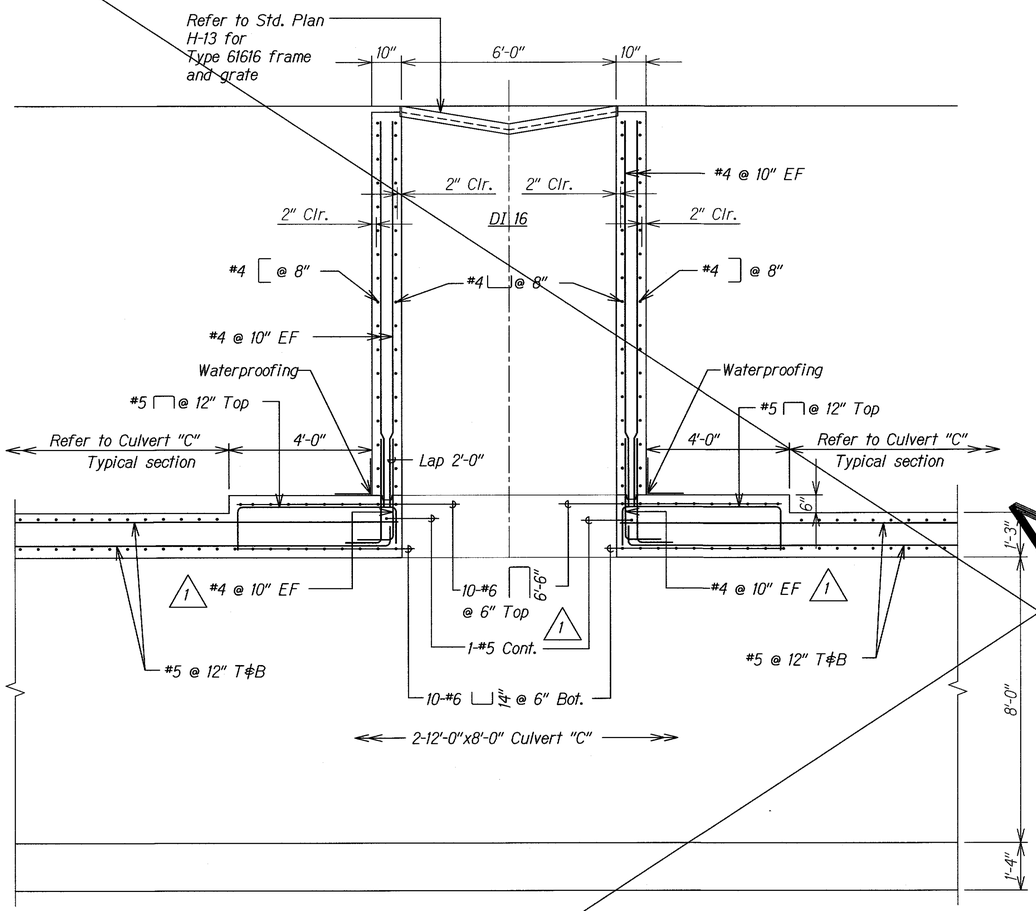

SECTION A
SCALE: 1/2" = 1'-0"
S1.3, S1.4 | S1.4

N.I.C.

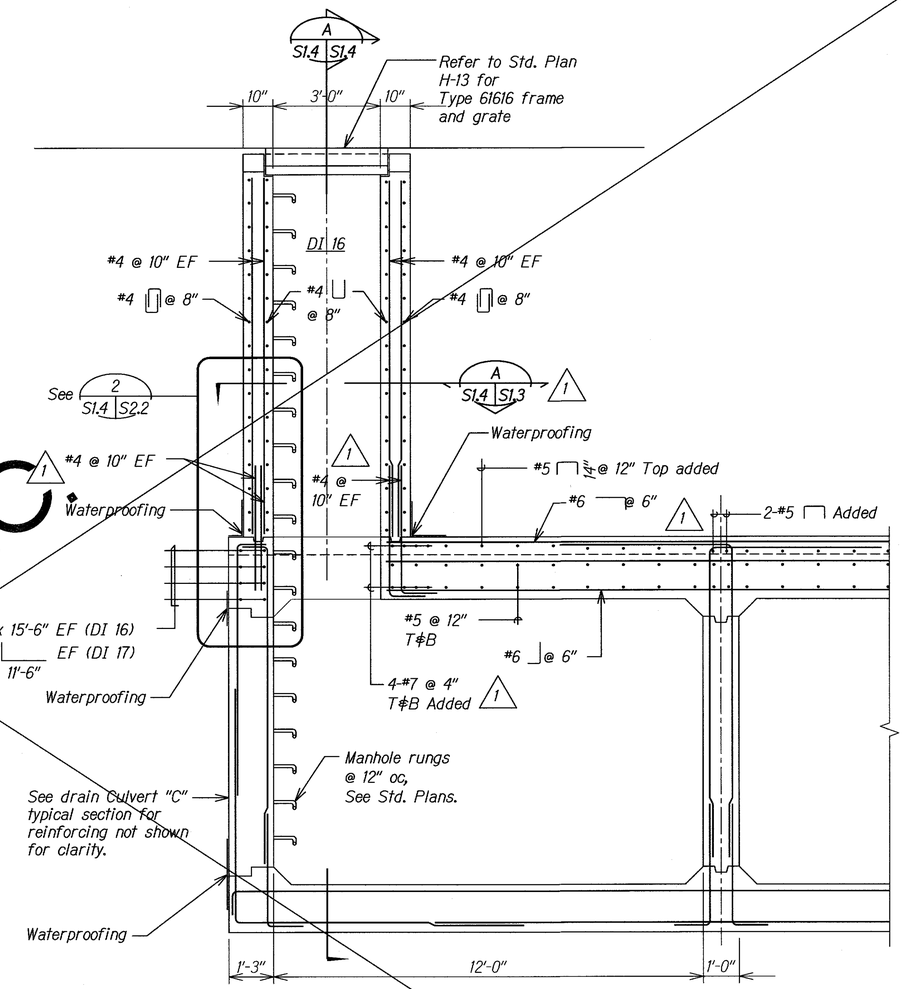

SECTION B
SCALE: 1/2" = 1'-0"
S1.2, S1.3 | S1.4

ORIGINAL PLAN	SURVEY PLOTTED BY	DATE
	DRAWN BY	
	TRACED BY	
NOTE BOOK	DESIGNED BY	
	QUANTITIES BY	
No.	CHECKED BY	

DAVID K. FUJIWARA
LICENSED PROFESSIONAL ENGINEER
NO. 8104-S
HAWAII, U.S.A.

THIS WORK WAS PREPARED BY ME OR UNDER MY SUPERVISION.

SIGNATURE — EXPIRATION DATE OF THE LICENSE 4-30-08

DATE	REVISION
6/21/06	Delete Sheet per SDOT
1/18/05	1 Clarification of Notes

STATE OF HAWAII
DEPARTMENT OF TRANSPORTATION
HIGHWAYS DIVISION

DRAIN CULVERT "C" - SECTIONS

North-South Road
Phase 1A
F.A.I. Proj. No. STP-8930(1)

Scale: As Noted — Date: Dec. 22, 2004

SHEET No. S1.4 OF 43 SHEETS

C.O.ADD. 75

FED. ROAD DIST. NO.	STATE	FED. AID PROJ. NO.	FISCAL YEAR	SHEET NO.	TOTAL SHEETS
HAWAII	HAW.	STP-8930(1)	2005	C.O.ADD.-76	144

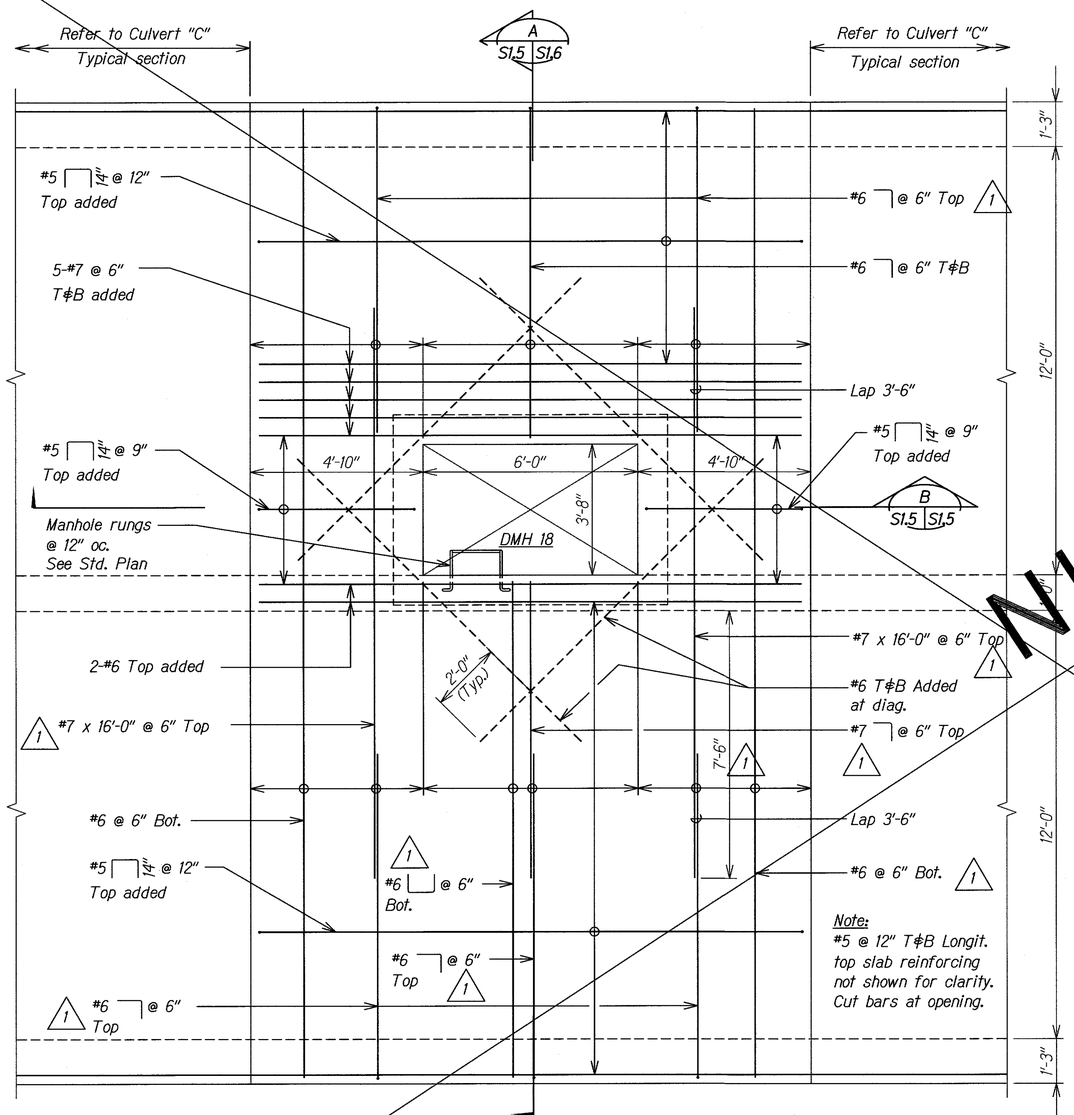

Note:
#5 @ 12" T&B Longit. top slab reinforcing not shown for clarity. Cut bars at opening.

DRAIN CULVERT "C" TOP SLAB PLAN AT DMH 18

1 S1.1 S1.5

SCALE: 1/2" = 1'-0"

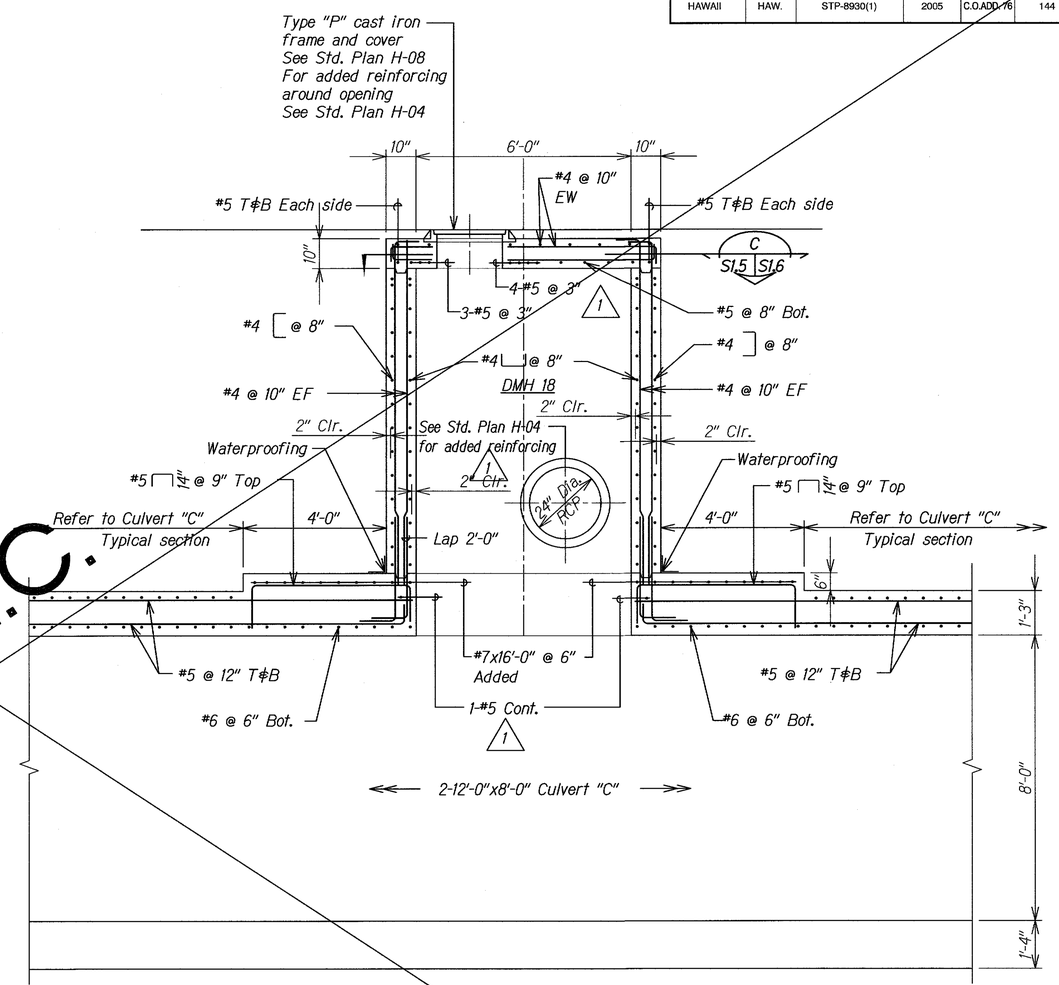

SECTION B

SCALE: 1/2" = 1'-0" S1.5, S1.6 S1.5

N.I.C.

SURVEY PLOTTED BY	
DRAWN BY	
TRACED BY	
DESIGNED BY	
QUANTITIES BY	
CHECKED BY	
DATE	

ORIGINAL PLAN | NOTE BOOK No.

DAVID K. FUJIWARA LICENSED PROFESSIONAL ENGINEER NO. 8104-S HAWAII, U.S.A.

THIS WORK WAS PREPARED BY ME OR UNDER MY SUPERVISION.

SIGNATURE — EXPIRATION DATE OF THE LICENSE 4-30-08

DATE	REVISION
6/21/06	Delete Sheet per SDOT
1/18/05	1 Clarification of Notes

STATE OF HAWAII
DEPARTMENT OF TRANSPORTATION
HIGHWAYS DIVISION

DRAIN CULVERT "C" - TOP SLAB PLAN AT DMH 18 AND SECTION

North-South Road
Phase 1A
F.A.I. Proj. No. STP-8930(1)

Scale: As Noted Date: Dec. 22, 2004

SHEET No. S1.5 OF 43 SHEETS

C.O.ADD. 76

FED. ROAD DIST. NO.	STATE	FED. AID PROJ. NO.	FISCAL YEAR	SHEET NO.	TOTAL SHEETS
HAWAII	HAW.	STP-8930(1)	2005	C.O.ADD.77	144

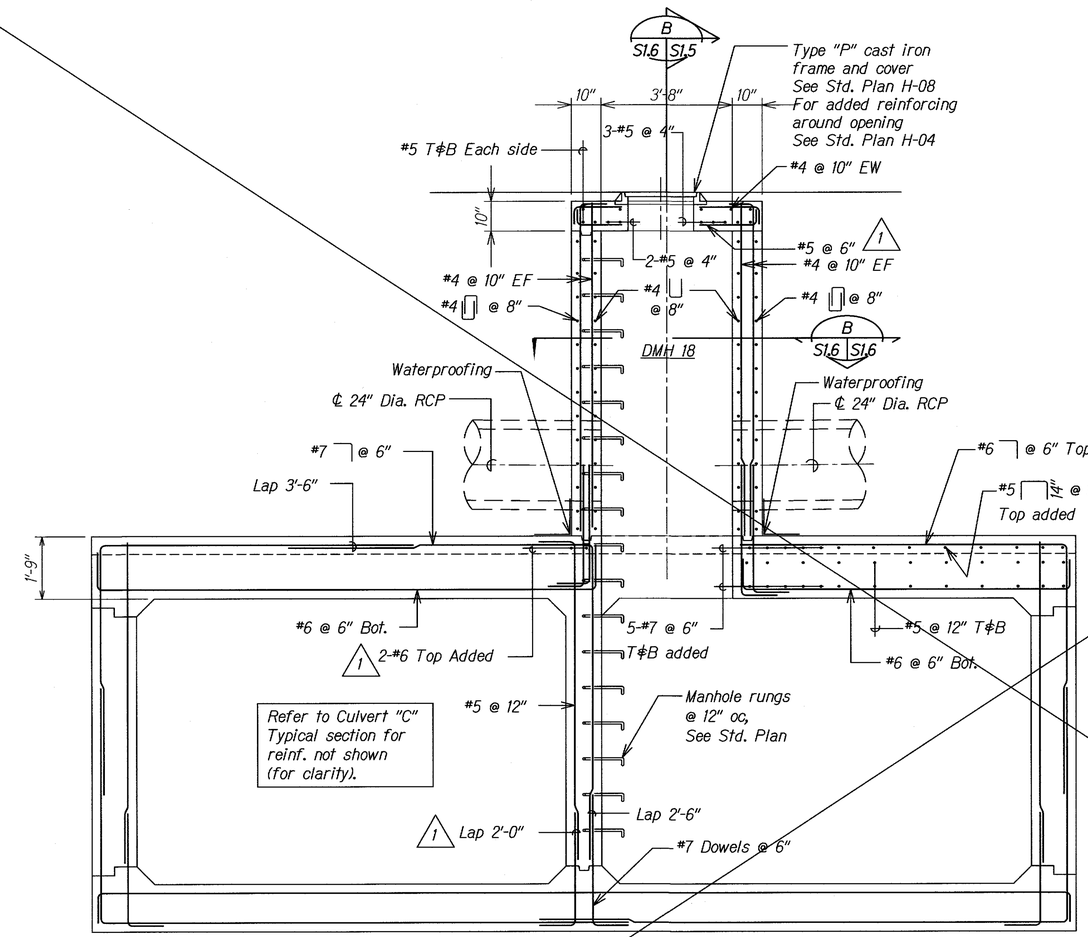

SECTION A

SCALE: 1/2" = 1'-0" S1.5 | S1.6

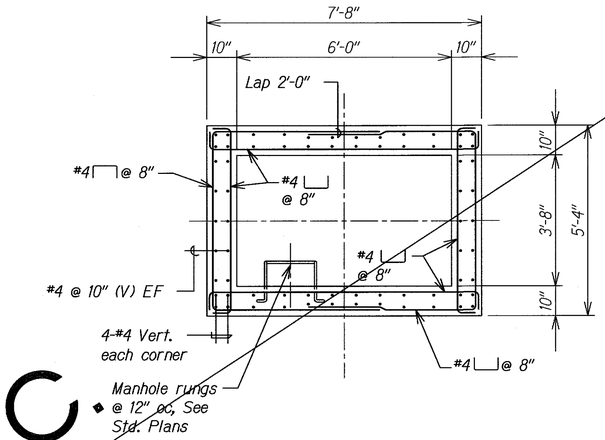

N.I.C.

SECTION B

SCALE: 1/2" = 1'-0" S1.6 | S1.6

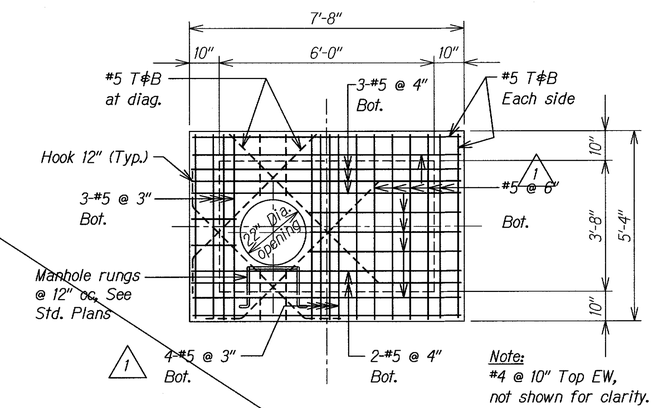

DMH 18 - TOP SLAB PLAN

SCALE: 1/2" = 1'-0" S1.5 | S1.6

SURVEY PLOTTED BY	DATE
DRAWN BY	
TRACED BY	
DESIGNED BY	
QUANTITIES BY	
CHECKED BY	

ORIGINAL PLAN — NOTE BOOK No.

DAVID K. FUJIWARA LICENSED PROFESSIONAL ENGINEER NO. 8104-S HAWAII, U.S.A.

THIS WORK WAS PREPARED BY ME OR UNDER MY SUPERVISION.

SIGNATURE — EXPIRATION DATE OF THE LICENSE 4-30-08

DATE	REVISION
6/21/06	Delete Sheet per SDOT
1/18/05	1 Clarification of Notes

STATE OF HAWAII
DEPARTMENT OF TRANSPORTATION
HIGHWAYS DIVISION

DRAIN CULVERT "C" - TOP SLAB PLAN AT DMH 18 AND SECTIONS

North-South Road
Phase 1A
F.A.I. Proj. No. STP-8930(1)

Scale: As Noted Date: Dec. 22, 2004

SHEET No. S1.6 OF 43 SHEETS

C.O.ADD. 77

FED. ROAD DIST. NO.	STATE	FED. AID PROJ. NO.	FISCAL YEAR	SHEET NO.	TOTAL SHEETS
HAWAII	HAW.	STP-8930(1)	2005	ADD. 78	144

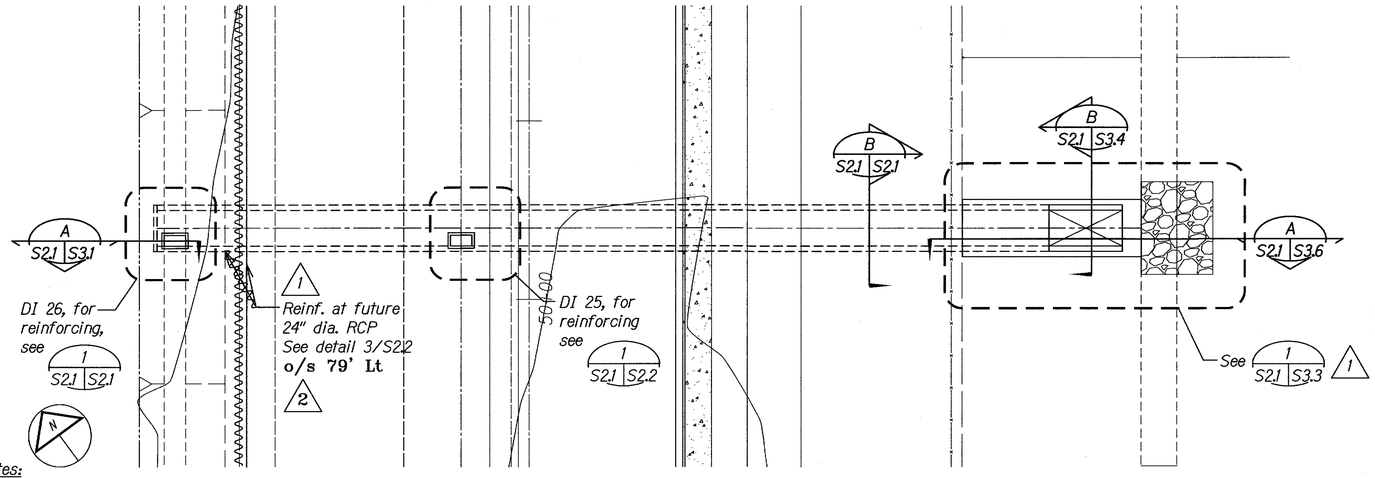

Notes:

1. Construction joints shall be spaced at a maximum of 60'-0" and control joints shall be spaced at a maximum of 20'-0". (1)
2. Refer to sheet S3.1 for construction and control joint details.
3. Refer to civil drawings for Culvert, DI, and Outlet profile dimensions and elevations. (1)

DRAIN CULVERT "D" - LAYOUT PLAN (A S2.1 S2.1)

SCALE: 1" = 20'

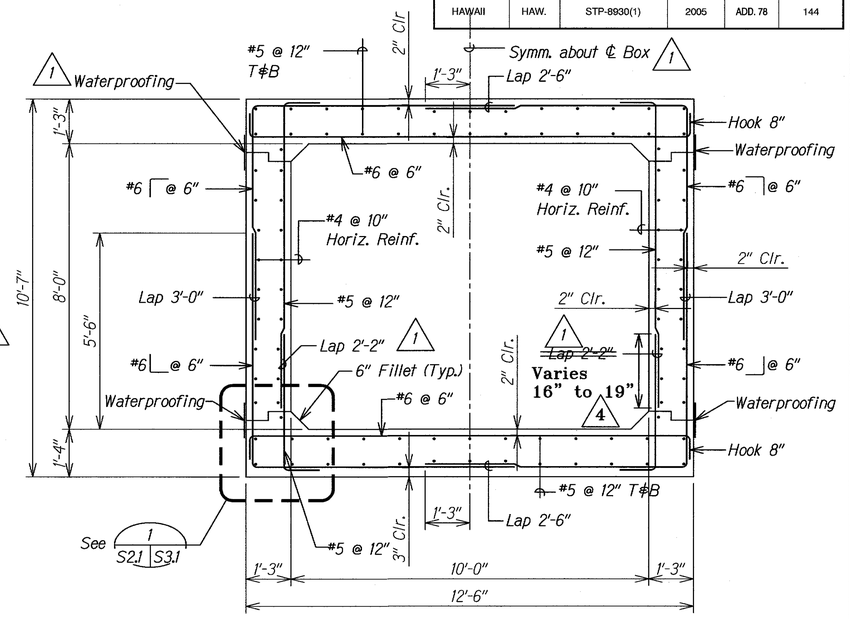

DRAIN CULVERT "D" - TYPICAL SECTION (B S2.1 S2.1)

SCALE: 1/2" = 1'-0"

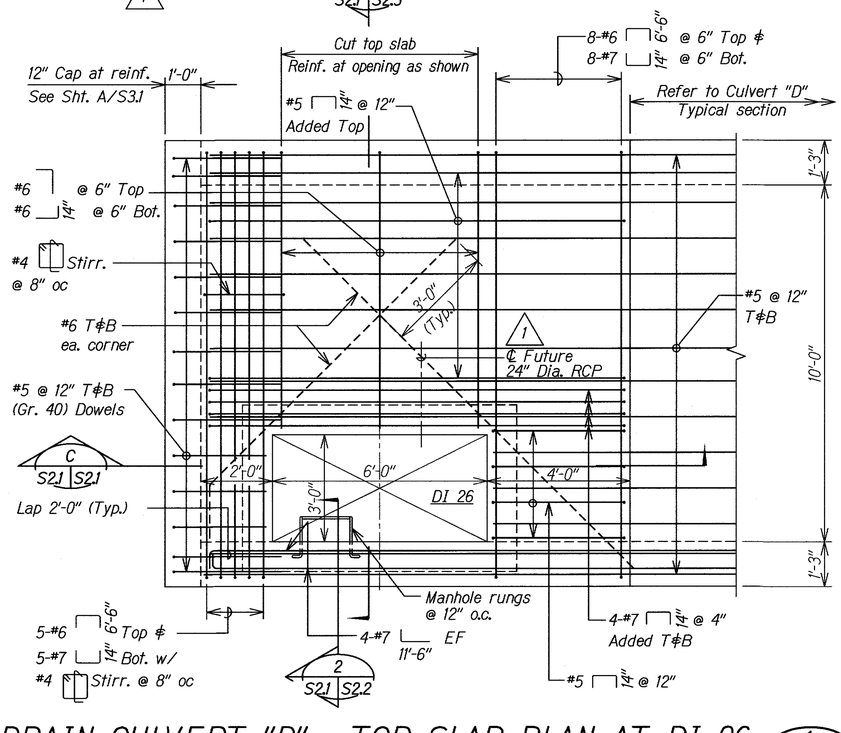

DRAIN CULVERT "D" - TOP SLAB PLAN AT DI 26 (1 S2.1 S2.1)

SCALE: 1/2" = 1'-0"

Note:
Refer to Section A/S1.2 For Top Portion of DI 26.

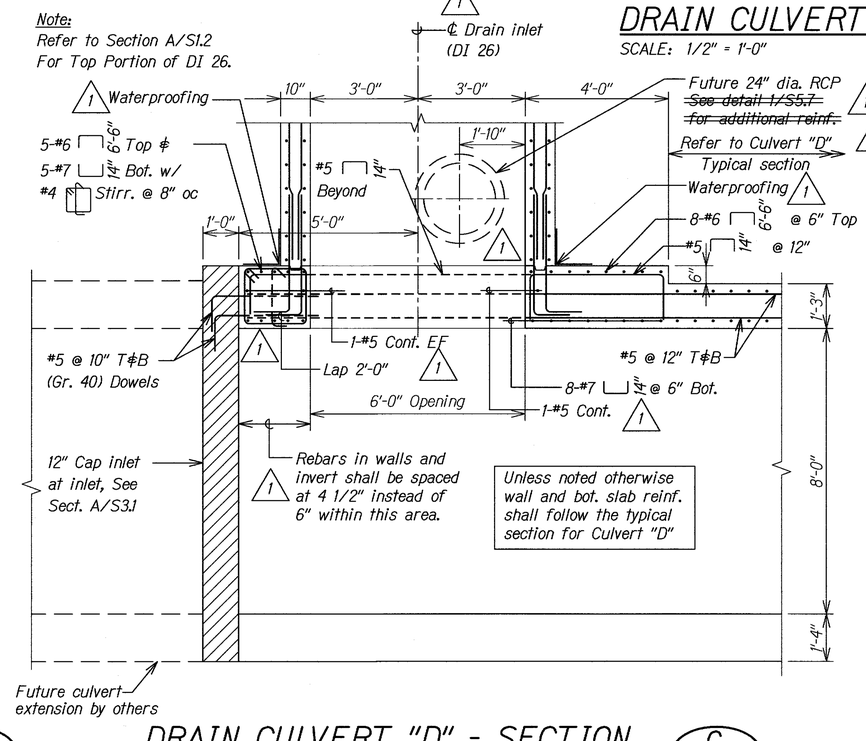

DRAIN CULVERT "D" - SECTION (C S2.1, S2.3 S2.1)

SCALE: 1/2" = 1'-0"

(1) Additional Reinf. Deleted Due to Conflict (3)

LEGEND FOR AS-BUILT POSTINGS

~~	Squiggly line for as-built deletion
~~100.00~~	Double line for as-built deletion
Roadway	Text for as-built posting

DAVID K. FUJIWARA LICENSED PROFESSIONAL ENGINEER NO. 8104-S HAWAII, U.S.A.

THIS WORK WAS PREPARED BY ME OR UNDER MY SUPERVISION.

SIGNATURE — EXPIRATION DATE OF THE LICENSE 4-30-08

DATE	REVISION
–	(4) As Built – RFI 41
–	(3) As Built – RFI 47
–	(2) As Built – RFI 37
1/18/05	(1) Clarification of Notes

STATE OF HAWAII
DEPARTMENT OF TRANSPORTATION
HIGHWAYS DIVISION

DRAIN CULVERT "D" - LAYOUT PLAN, TOP SLAB PLAN AT DI 26, SECTION AND DETAIL

North-South Road
Phase 1A
F.A.I. Proj. No. STP-8930(1)

Scale: As Noted — Date: Dec. 22, 2004

SHEET No. S2.1 OF 43 SHEETS

ORIGINAL PLAN — NOTE BOOK No. — SURVEY PLOTTED BY — DRAWN BY — TRACED BY — DESIGNED BY — QUANTITIES BY — CHECKED BY — DATE

"AS-BUILT"

ADD. 78

FED. ROAD DIST. NO.	STATE	FED. AID PROJ. NO.	FISCAL YEAR	SHEET NO.	TOTAL SHEETS
HAWAII	HAW.	STP-8930(1)	2005	C.O.ADD. 79	144

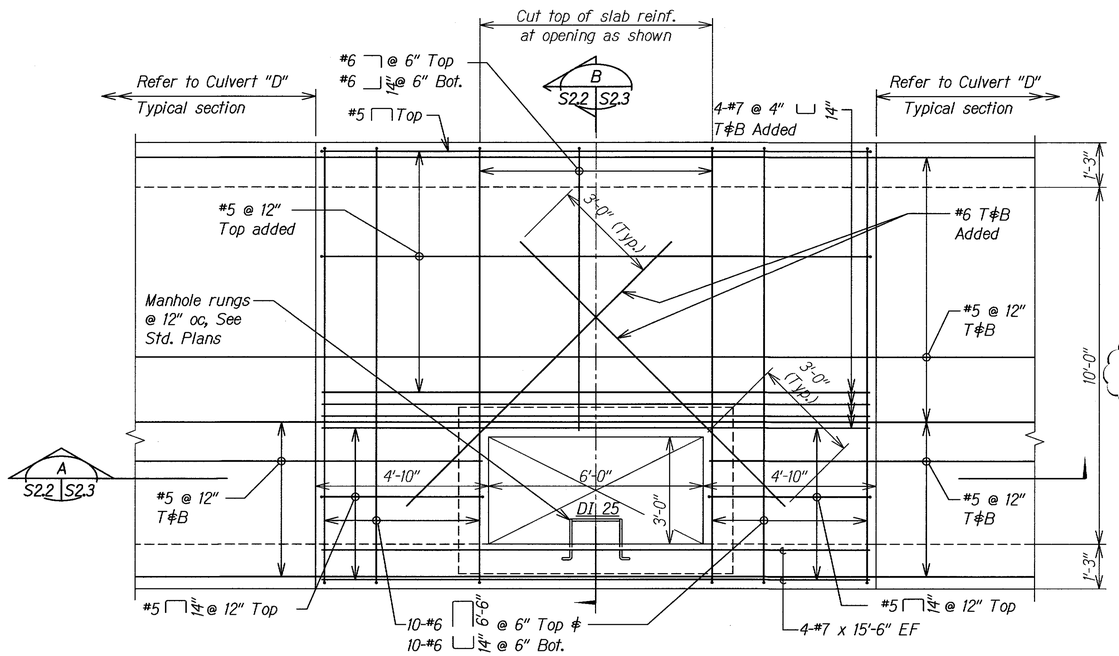

DRAIN CULVERT "D" - TOP SLAB PLAN AT DI

SCALE: 1/2" = 1'-0"

1 S2.1 S2.2

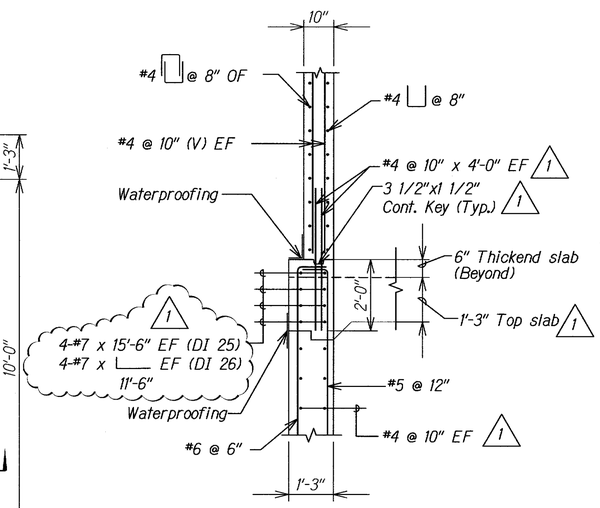

DETAIL

SCALE: 1/2" = 1'-0"

2 S2.1 S2.3 S2.2

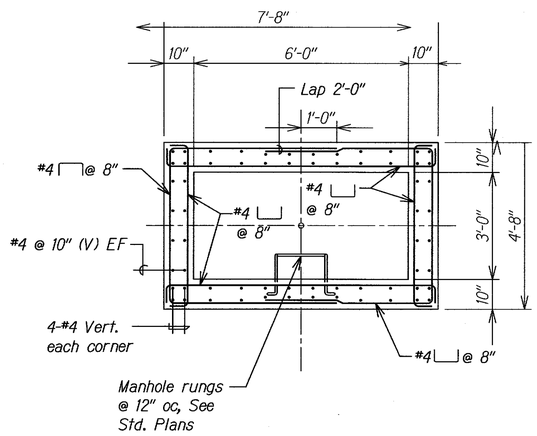

SECTION

SCALE: 1/2" = 1'-0"

A S2.3 S2.2

LEGEND FOR AS-BUILT POSTINGS

∿∿∿	Squiggly line for as-built deletion
~~100.00~~	Double line for as-built deletion
Roadway	Text for as-built posting

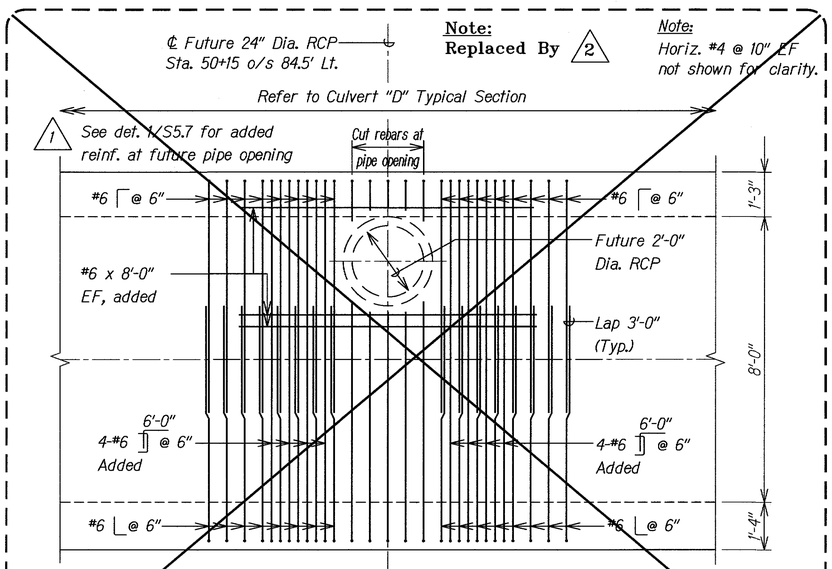

1 DRAIN CULVERT "D" - REINFORCING DETAIL AT FUTURE 24" DIA. RCP

SCALE: 1/2" = 1'-0"

3 S2.1 S2.2

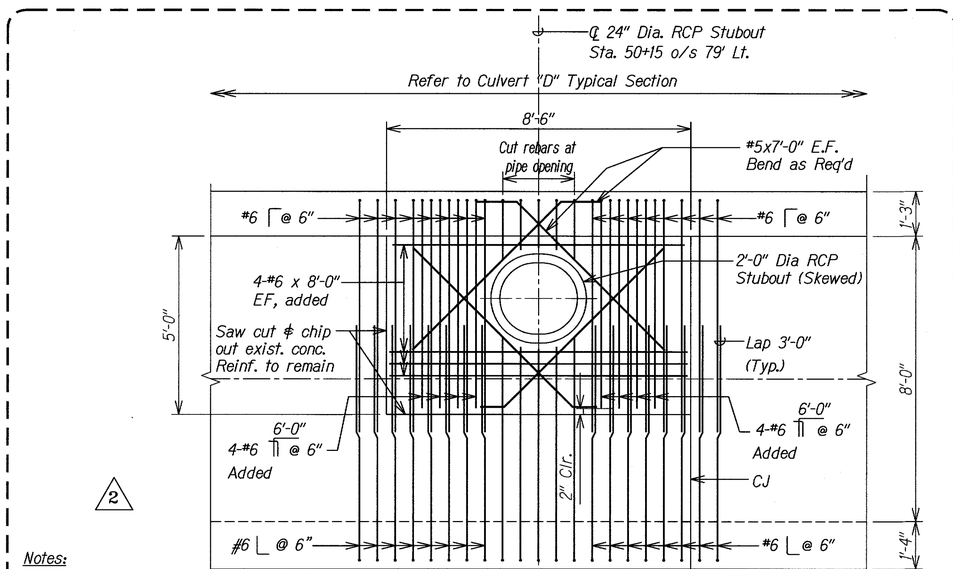

2

Notes:

1. Horiz. #4 @ 10" EF not shown for clarity.
2. See Det. 1/S5.7 for additional information.

DRAIN CULVERT "D" - REINFORCING DETAIL AT FUTURE 24" DIA. RCP

SCALE: 1/2" = 1'-0"

3 S2.1 S2.2

DAVID K. FUJIWARA LICENSED PROFESSIONAL ENGINEER NO. 8104-S HAWAII, U.S.A.

THIS WORK WAS PREPARED BY ME OR UNDER MY SUPERVISION.

SIGNATURE — EXPIRATION DATE OF THE LICENSE 4-30-08

DATE	REVISION
–	2 As Built – RFI 37
6/21/06	Revise Detail per SDOT
1/18/05	1 Clarification of Notes

STATE OF HAWAII
DEPARTMENT OF TRANSPORTATION
HIGHWAYS DIVISION

DRAIN CULVERT "D" - TOP SLAB PLAN AT DI 25, SECTION AND DETAIL

North-South Road
Phase 1A
F.A.I. Proj. No. STP-8930(1)

Scale: As Noted — Date: Dec. 22, 2004

SHEET No. S2.2 OF 43 SHEETS

ORIGINAL PLAN — SURVEY PLOTTED BY — DRAWN BY — TRACED BY — DESIGNED BY — QUANTITIES BY — CHECKED BY — DATE — NOTE BOOK — No.

"AS-BUILT"

C.O.ADD. 79

FED. ROAD DIST. NO.	STATE	FED. AID PROJ. NO.	FISCAL YEAR	SHEET NO.	TOTAL SHEETS
HAWAII	HAW.	STP-8930(1)	2005	C.O.ADD. 80	144

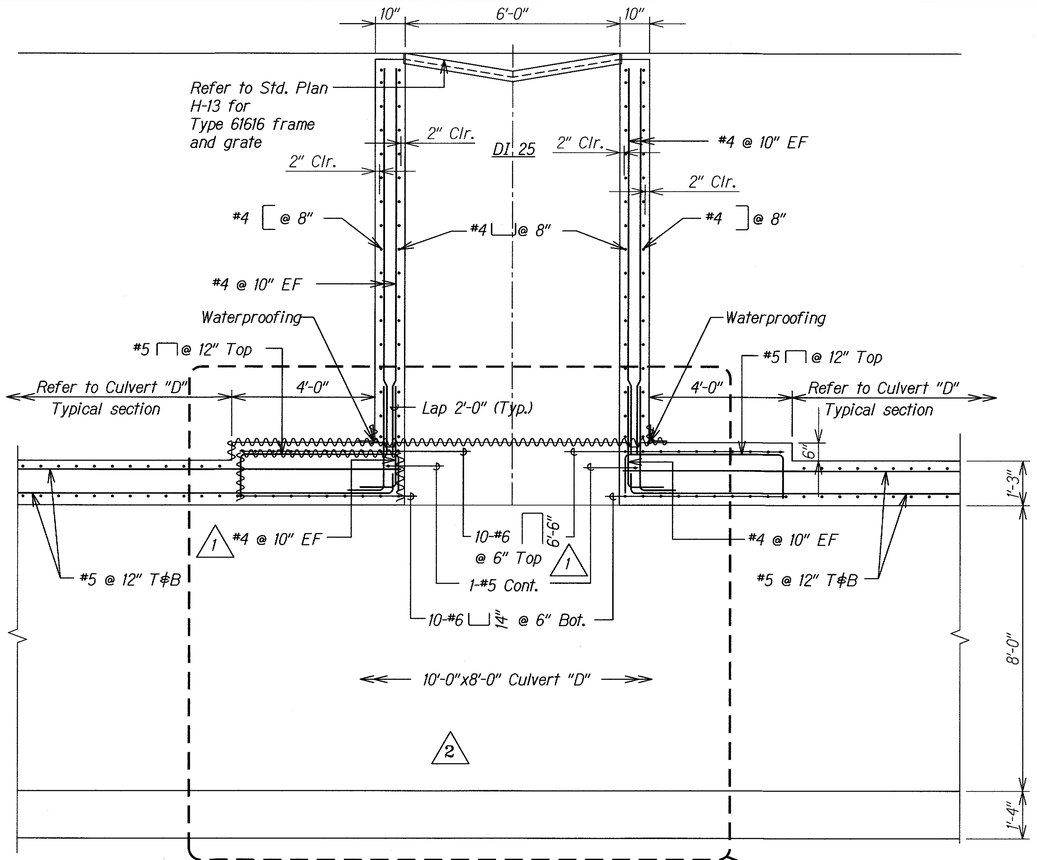

SECTION A

SCALE: 1/2" = 1'-0" S2.2, S2.3 | S2.3

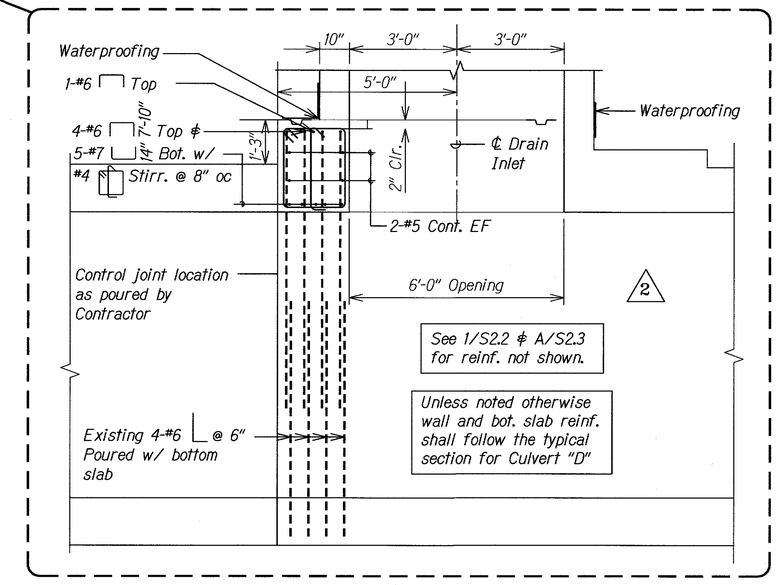

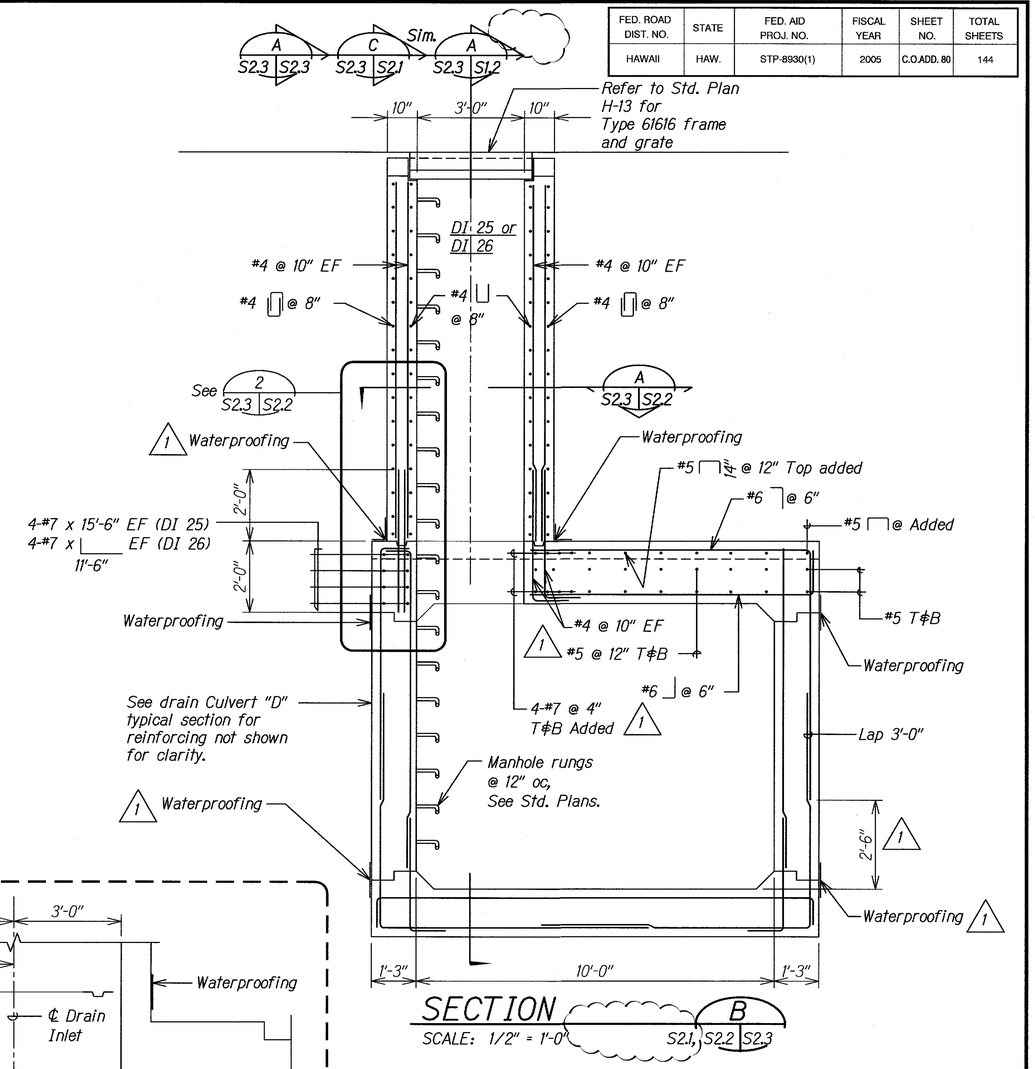

SECTION B

SCALE: 1/2" = 1'-0" S2.1, S2.2 | S2.2, S2.3

–	2 As Built – RFI 38
6/21/06	Revise Detail per SDOT
1/18/05	1 Clarification of Notes
DATE	REVISION

LEGEND FOR AS-BUILT POSTINGS

∧∧∧∧	Squiggly line for as-built deletion
~~100.00~~	Double line for as-built deletion
Roadway	Text for as-built posting

ORIGINAL PLAN | SURVEY PLOTTED BY | DRAWN BY | TRACED BY | DESIGNED BY | QUANTITIES BY | CHECKED BY | DATE | NOTE BOOK No.

DAVID K. FUJIWARA LICENSED PROFESSIONAL ENGINEER NO. 8104-S HAWAII, U.S.A.

THIS WORK WAS PREPARED BY ME OR UNDER MY SUPERVISION.

SIGNATURE — EXPIRATION DATE OF THE LICENSE 4-30-08

STATE OF HAWAII
DEPARTMENT OF TRANSPORTATION
HIGHWAYS DIVISION

DRAIN CULVERT "D" - SECTIONS

North-South Road
Phase 1A
F.A.I. Proj. No. STP-8930(1)

Scale: As Noted — Date: Dec. 22, 2004

SHEET No. S2.3 OF 43 SHEETS

"AS-BUILT"

C.O.ADD. 80

FED. ROAD DIST. NO.	STATE	FED. AID PROJ. NO.	FISCAL YEAR	SHEET NO.	TOTAL SHEETS
HAWAII	HAW.	STP-8930(1)	2005	C.O. ADD. 81	144

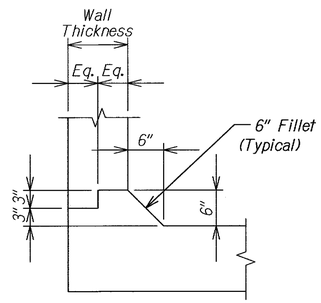

TYP. FILLET - KEY DETAIL 1
SCALE: 1" = 1'-0"
S2.1 S3.1

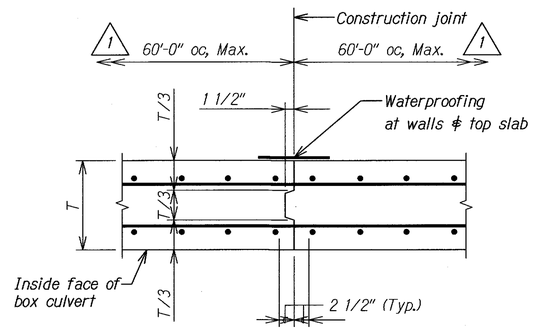

CONSTRUCTION JOINT DETAIL 2
SCALE: 1" = 1'-0"
S2.1 S3.1

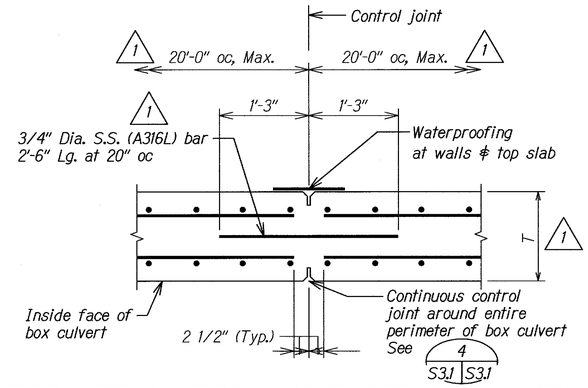

ALTERNATE CONTROL JOINT DETAIL 3
SCALE: 1" = 1'-0"
S2.1 S3.1

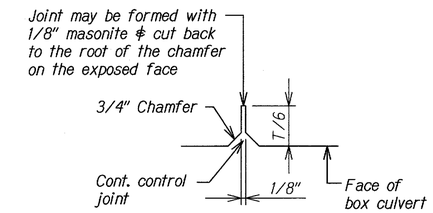

CONTROL JOINT DETAIL 4
SCALE: 3" = 1'-0"
S3.1 S3.1

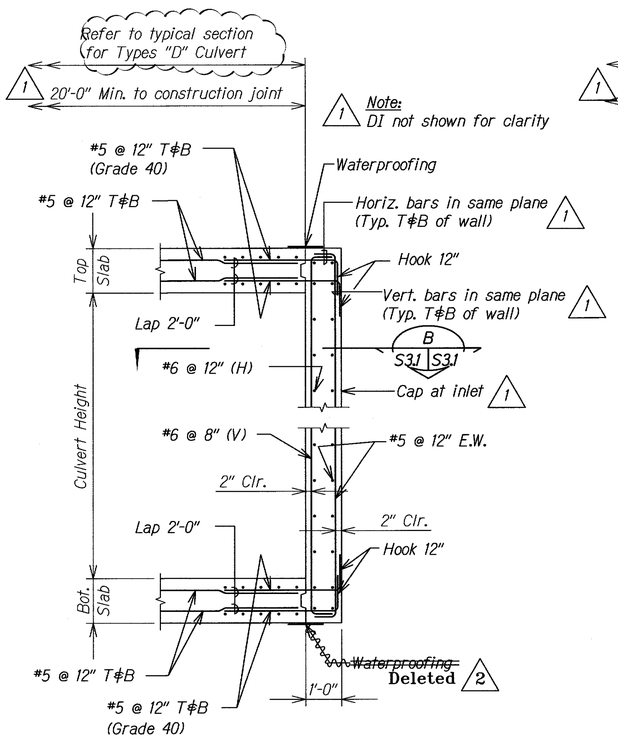

SECTION A
SCALE: 1/2" = 1'-0"
S2.1 S3.1

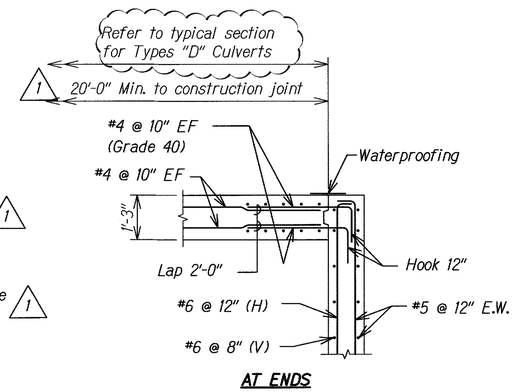

SECTION B
SCALE: 1/2" = 1'-0"
S3.1 S3.1

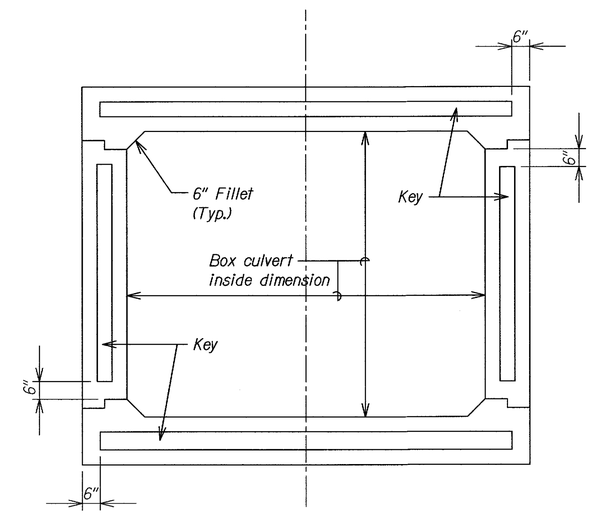

CONSTRUCTION JOINT KEY SCHEMATIC 4
SCALE: 1/2" = 1'-0"
S2.1 S3.1

LEGEND FOR AS-BUILT POSTINGS	
~~	Squiggly line for as-built deletion
~~100.00~~	Double line for as-built deletion
Roadway	Text for as-built posting

DAVID K. FUJIWARA LICENSED PROFESSIONAL ENGINEER NO. 8104-S HAWAII, U.S.A.

THIS WORK WAS PREPARED BY ME OR UNDER MY SUPERVISION.

SIGNATURE — EXPIRATION DATE OF THE LICENSE 4-30-08

DATE	REVISION
–	2 As Built – RFI 12C
6/21/06	Remove & Revise Detail per SDOT
1/18/05	1 Clarification of Notes

STATE OF HAWAII
DEPARTMENT OF TRANSPORTATION
HIGHWAYS DIVISION

DRAIN CULVERT TYPICAL DETAILS AND SECTIONS

North-South Road
Phase 1A
F.A.I. Proj. No. STP-8930(1)

Scale: As Noted — Date: Dec. 22, 2004

SHEET No. S3.1 OF 43 SHEETS

ORIGINAL PLAN — NOTE BOOK No. — SURVEY PLOTTED BY — DRAWN BY — TRACED BY — DESIGNED BY — QUANTITIES BY — CHECKED BY — DATE

"AS-BUILT"

C.O. ADD. 81

FED. ROAD DIST. NO.	STATE	FED. AID PROJ. NO.	FISCAL YEAR	SHEET NO.	TOTAL SHEETS
HAWAII	HAW.	STP-8930(1)	2005	C.O.ADD. 82	144

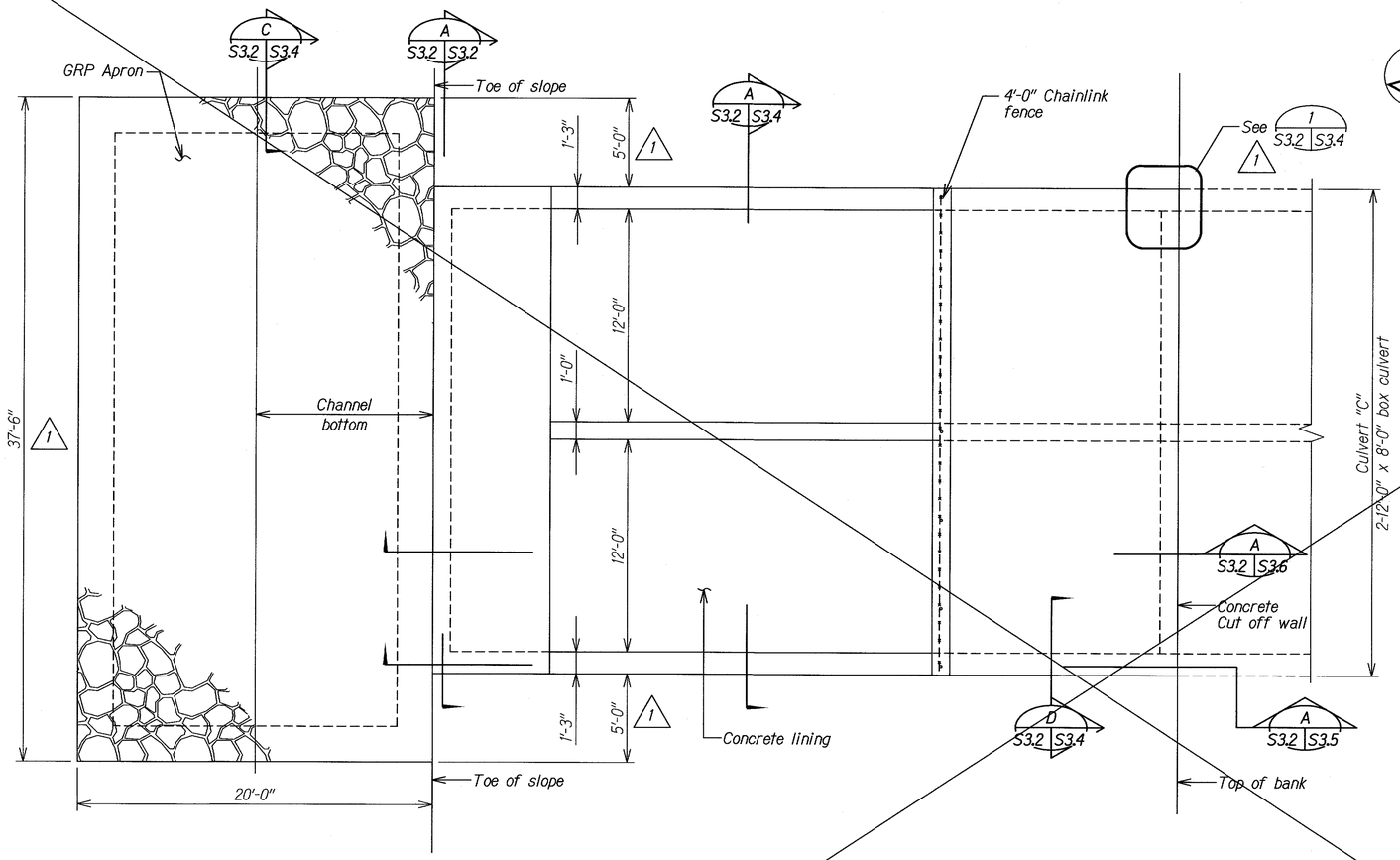

N.I.C.

DRAIN CULVERT "C" - OUTLET LAYOUT PLAN

1 S1.1 S3.2

SCALE: 1/4" = 1'-0"

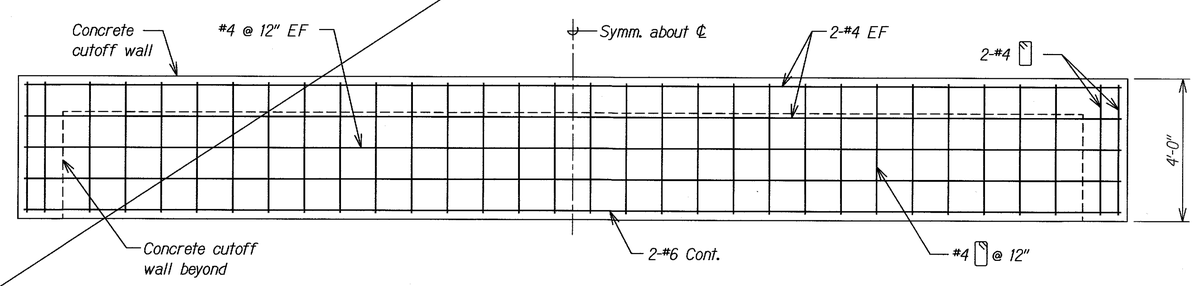

SECTION

A S3.2, S3.5, S3.6 S3.2

SCALE: 1/2" = 1'-0"

DATE	REVISION
6/21/06	Delete sheet per SDOT
1/18/05	1 Clarification of Note and Revised Dimensions

DAVID K. FUJIWARA LICENSED PROFESSIONAL ENGINEER NO. 8104-S HAWAII, U.S.A.

THIS WORK WAS PREPARED BY ME OR UNDER MY SUPERVISION.

SIGNATURE — EXPIRATION DATE OF THE LICENSE 4-30-08

STATE OF HAWAII
DEPARTMENT OF TRANSPORTATION
HIGHWAYS DIVISION

DRAIN CULVERT "C"
OUTLET LAYOUT PLAN AND SECTION
North-South Road
Phase 1A
F.A.I. Proj. No. STP-8930(1)

Scale: As Noted — Date: Dec. 22, 2004

SHEET No. S3.2 OF 43 SHEETS

ORIGINAL PLAN — SURVEY PLOTTED BY — DRAWN BY — TRACED BY — DESIGNED BY — QUANTITIES BY — CHECKED BY — DATE — NOTE BOOK No.

C.O.ADD. 82

FED. ROAD DIST. NO.	STATE	FED. AID PROJ. NO.	FISCAL YEAR	SHEET NO.	TOTAL SHEETS
HAWAII	HAW.	STP-8930(1)	2005	ADD. 83	144

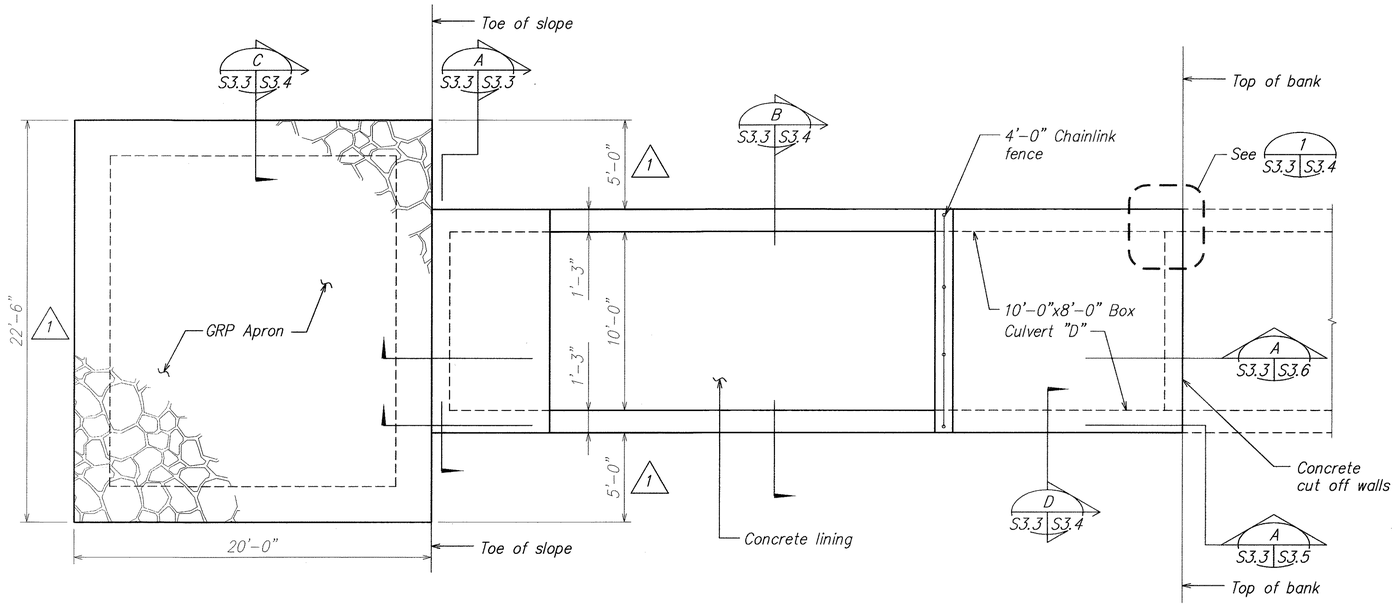

DRAIN CULVERT "D" – OUTLET LAYOUT PLAN (1 / S2.1 S3.3)

SCALE: 1/4" = 1'-0"

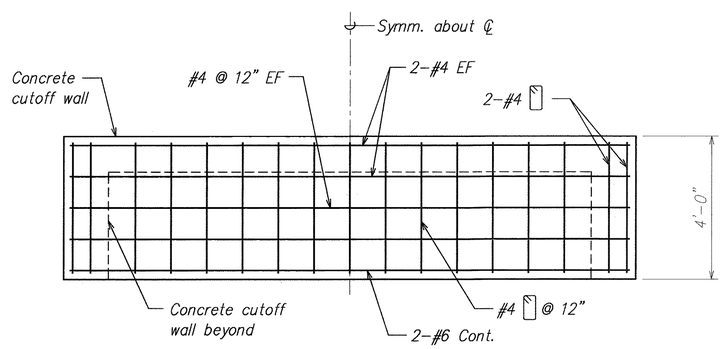

SECTION (A / S3.3, S3.5, S3.6 S3.3)

SCALE: 1/2" = 1'-0"

ORIGINAL PLAN	SURVEY PLOTTED BY	DATE
	DRAWN BY	
FINAL	TRACED BY	
NOTE BOOK	DESIGNED BY	
	QUANTITIES BY	
No.	CHECKED BY	

THIS WORK WAS PREPARED BY ME OR UNDER MY SUPERVISION.

SIGNATURE — EXPIRATION DATE OF THE LICENSE: 4-30-06

DAVID K. FUJIWARA — LICENSED PROFESSIONAL ENGINEER NO. 8104-S — HAWAII, U.S.A.

DATE	REVISION
1/18/05	1 Revised Dimension

STATE OF HAWAII
DEPARTMENT OF TRANSPORTATION
HIGHWAYS DIVISION

DRAIN CULVERT "D"
OUTLET LAYOUT PLAN AND SECTION
North-South Road
Phase 1A
F.A.I. Proj. No. STP-8930(1)

Scale: As Noted — Date: Dec. 22, 2004

SHEET No. S3.3 OF 43 SHEETS

ADD. 83

NS-S303.DWG
PLOT 1 = 1

C:\KSF05\01-17-05 ADD1\NS-S303 ADD1.dwg, 1/17/2005 11:56:10 AM, KS-c.cc2, 1:1

FED. ROAD DIST. NO.	STATE	FED. AID PROJ. NO.	FISCAL YEAR	SHEET NO.	TOTAL SHEETS
HAWAII	HAW.	STP-8930(1)	2005	C.O.ADD. 84	144

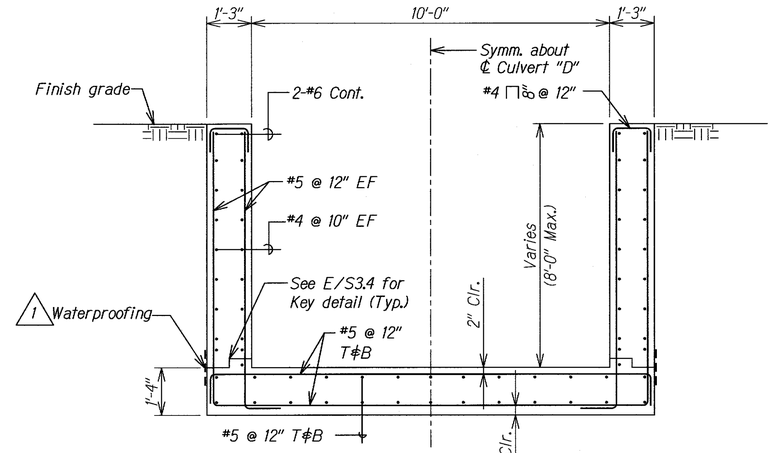

SECTION B
SCALE: 1/2" = 1'-0"
S2.1, S3.3, S3.5, S3.6 | S3.4

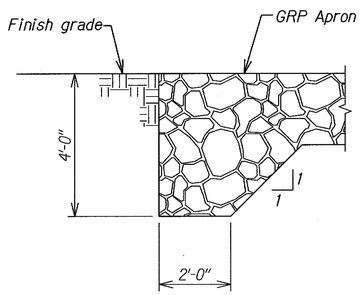

SECTION C
SCALE: 1/2" = 1'-0"
S3.3 | S3.4

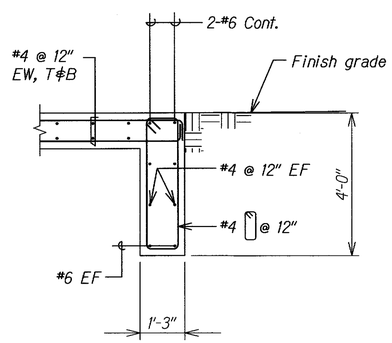

SECTION D
SCALE: 1/2" = 1'-0"
S3.3 | S3.4

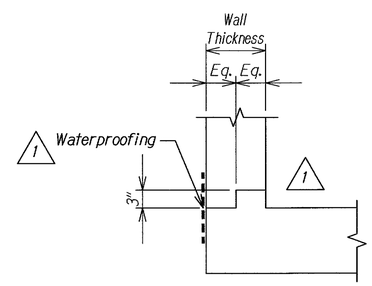

TYPICAL KEY DETAIL E
SCALE: 1" = 1'-0"
S3.4 | S3.4

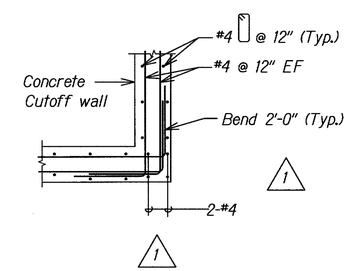

TYPICAL CORNER DETAIL 1
SCALE: 1/2" = 1'-0"
S3.3 | S3.4

DAVID K. FUJITWARA
LICENSED PROFESSIONAL ENGINEER
NO. 8104-S
HAWAII, U.S.A.

THIS WORK WAS PREPARED BY ME OR UNDER MY SUPERVISION.

SIGNATURE — EXPIRATION DATE OF THE LICENSE 4-30-08

ORIGINAL PLAN	SURVEY PLOTTED BY	DATE
	DRAWN BY	
	TRACED BY	
NOTE BOOK	DESIGNED BY	
	QUANTITIES BY	
No.	CHECKED BY	

DATE	REVISION
6/21/06	Remove & Revise Detail per SDOT
1/18/05	1 Added Note and Removed Dimensions

STATE OF HAWAII
DEPARTMENT OF TRANSPORTATION
HIGHWAYS DIVISION

DRAIN CULVERT "D" OUTLET
SECTIONS AND TYPICAL DETAILS
North-South Road
Phase 1A
F.A.I. Proj. No. STP-8930(1)

Scale: As Noted — Date: Dec. 22, 2004

SHEET No. S3.4 OF 43 SHEETS

C.O.ADD. 84

FED. ROAD DIST. NO.	STATE	FED. AID PROJ. NO.	FISCAL YEAR	SHEET NO.	TOTAL SHEETS
HAWAII	HAW.	STP-8930(1)	2005	C.O.ADD. 85	144

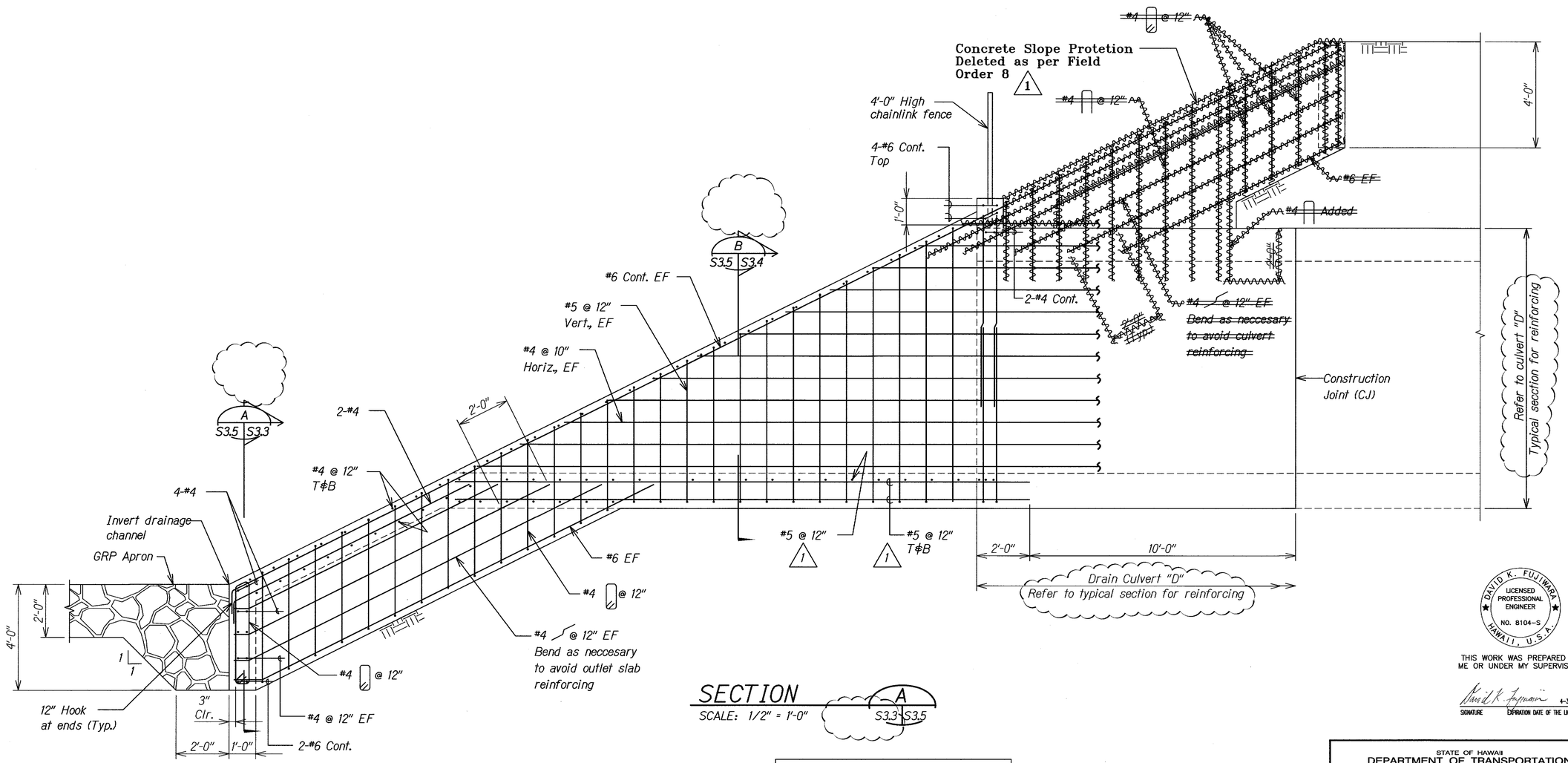

SECTION A
SCALE: 1/2" = 1'-0"
S3.3 S3.5

ORIGINAL PLAN	SURVEY PLOTTED BY	DATE
	DRAWN BY	
	TRACED BY	
NOTE BOOK	DESIGNED BY	
	QUANTITIES BY	
No.	CHECKED BY	

LEGEND FOR AS-BUILT POSTINGS

~~	Squiggly line for as-built deletion
~~100.00~~	Double line for as-built deletion
Roadway	Text for as-built posting

DATE	REVISION
–	1 As Built – Field Order 8
6/21/06	Revise Detail per SDOT
1/18/05	1 Clarification of Note

DAVID K. FUJIWARA LICENSED PROFESSIONAL ENGINEER NO. 8104-S HAWAII, U.S.A.

THIS WORK WAS PREPARED BY ME OR UNDER MY SUPERVISION.

SIGNATURE — EXPIRATION DATE OF THE LICENSE 4-30-06

STATE OF HAWAII
DEPARTMENT OF TRANSPORTATION
HIGHWAYS DIVISION

DRAIN CULVERT "D"
OUTLET SECTION
North-South Road
Phase 1A
F.A.I. Proj. No. STP-8930(1)

Scale: As Noted — Date: Dec. 22, 2004

SHEET No. S3.5 OF 43 SHEETS

"AS-BUILT"

C.O.ADD. 85

FED. ROAD DIST. NO.	STATE	FED. AID PROJ. NO.	FISCAL YEAR	SHEET NO.	TOTAL SHEETS
HAWAII	HAW.	STP-8930(1)	2005	C.O.ADD. 86	144

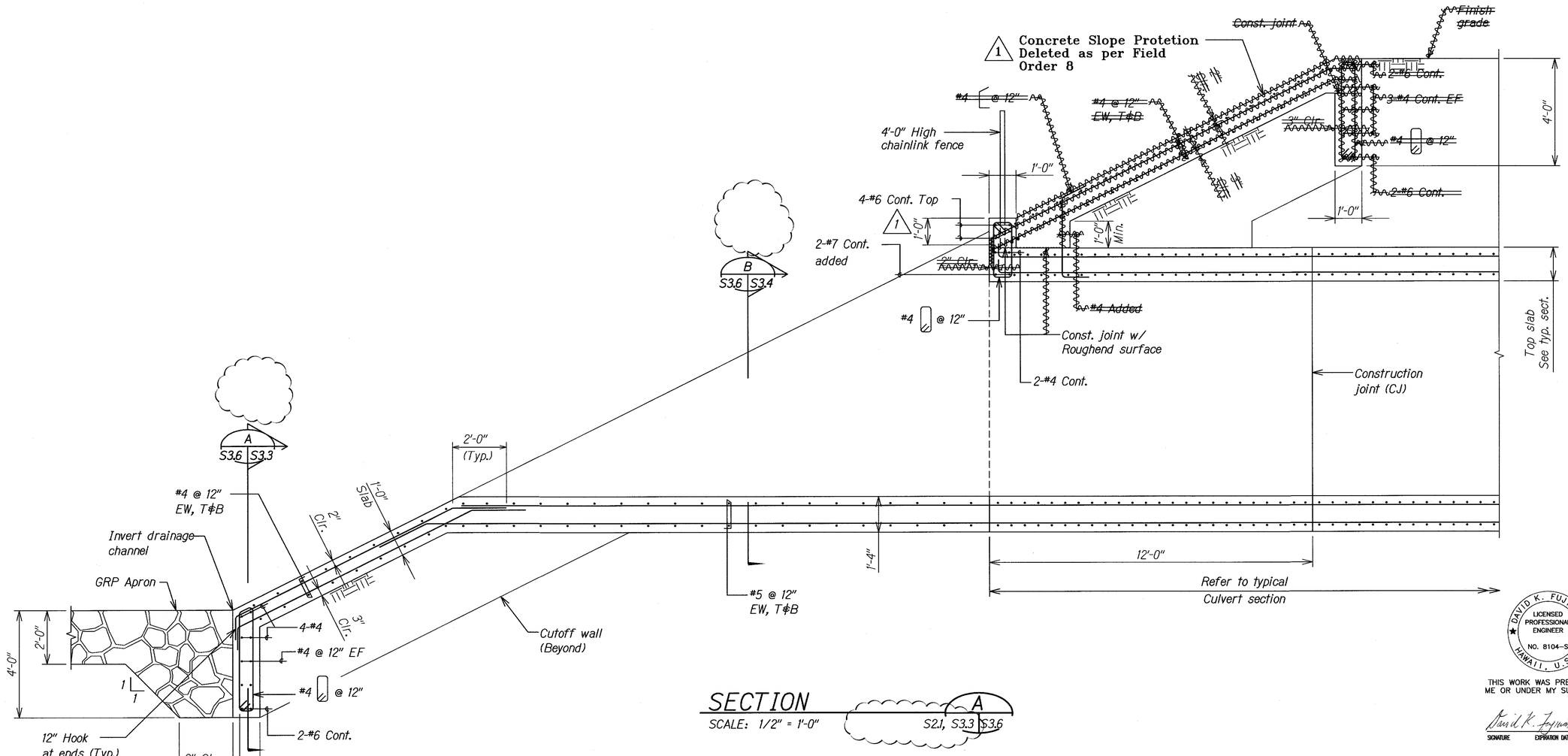

SECTION A
SCALE: 1/2" = 1'-0"
S2.1, S3.3 S3.6

SURVEY PLOTTED BY	DATE
DRAWN BY	
TRACED BY	
DESIGNED BY	
QUANTITIES BY	
CHECKED BY	

ORIGINAL PLAN
NOTE BOOK No.

LEGEND FOR AS-BUILT POSTINGS

~~	Squiggly line for as-built deletion
~~100.00~~	Double line for as-built deletion
Roadway	Text for as-built posting

DATE	REVISION
–	1 As Built – Field Order 8
6/21/06	Revise Detail per SDOT
1/18/05	1 Added Dimension

DAVID K. FUJIWARA LICENSED PROFESSIONAL ENGINEER NO. 8104-S HAWAII, U.S.A.

THIS WORK WAS PREPARED BY ME OR UNDER MY SUPERVISION.

SIGNATURE — EXPIRATION DATE OF THE LICENSE 6-30-08

STATE OF HAWAII
DEPARTMENT OF TRANSPORTATION
HIGHWAYS DIVISION

DRAIN CULVERT "D" OUTLET SECTION
North-South Road
Phase 1A
F.A.I. Proj. No. STP-8930(1)

Scale: As Noted — Date: Dec. 22, 2004

SHEET No. S3.6 OF 43 SHEETS

"AS-BUILT"

C.O.ADD. 86

FED. ROAD DIST. NO.	STATE	FED. AID PROJ. NO.	FISCAL YEAR	SHEET NO.	TOTAL SHEETS
HAWAII	HAW.	STP-8930(1)	2005	ADD. 87	144

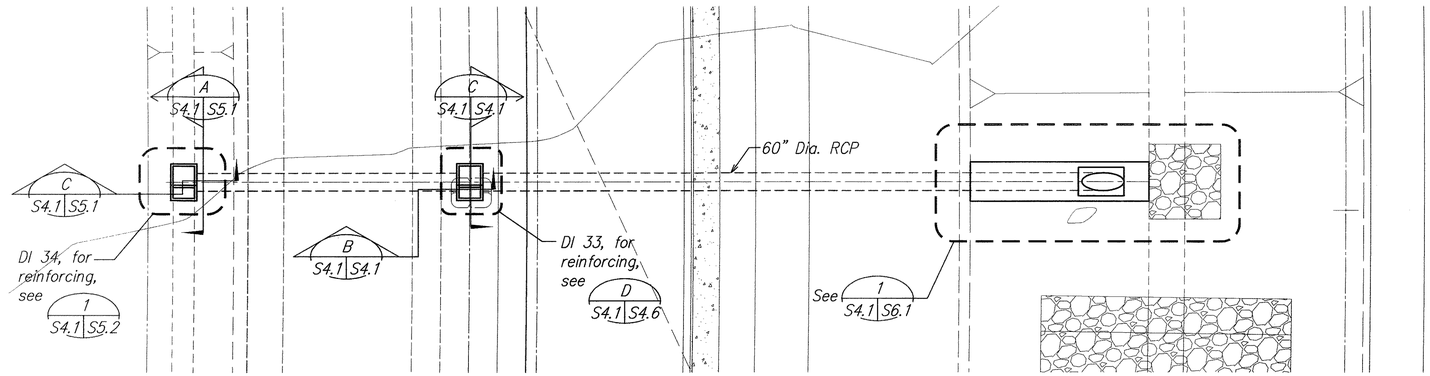

DRAIN CULVERT "E" – LAYOUT PLAN (A / S4.1 S4.1)

SCALE: 1" = 20'

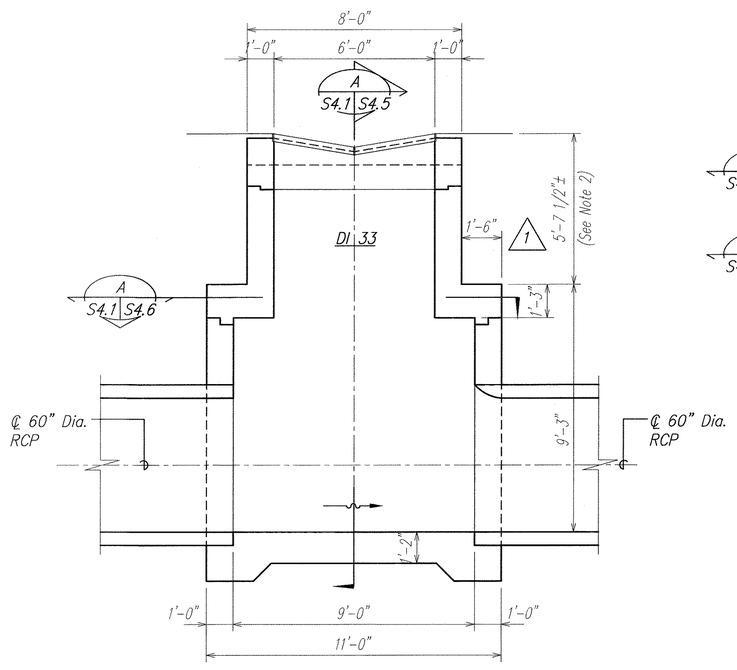

SECTION (B / S4.1 S4.1)

SCALE: 3/8" = 1'-0"

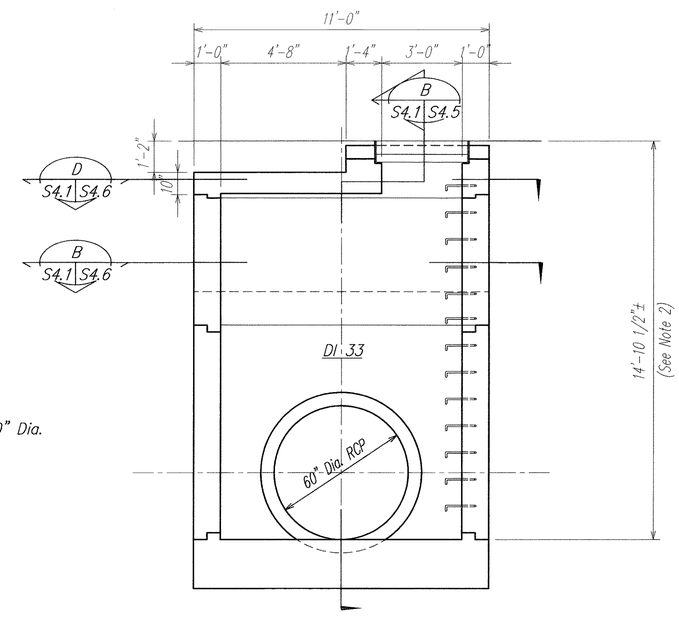

SECTION (C / S4.1 S4.1)

SCALE: 3/8" = 1'-0"

DRAIN CULVERT "E" – SECTIONS AT DI 33 (1 / S4.1 S4.1)

Note:
1. Refer to sheets S4.5 and S4.6 for reinforcing.
2. Refer to civil drawings for DI elevations and verify dimension

DATE	REVISION
1/18/05	1 Added Dimension and Clarification

DAVID K. FUJIWARA
LICENSED PROFESSIONAL ENGINEER
NO. 8104-S
HAWAII, U.S.A.

THIS WORK WAS PREPARED BY ME OR UNDER MY SUPERVISION.

SIGNATURE — EXPIRATION DATE OF THE LICENSE 4-30-06

STATE OF HAWAII
DEPARTMENT OF TRANSPORTATION
HIGHWAYS DIVISION

DRAIN CULVERT "E" – LAYOUT PLAN AND SECTIONS AT DI 33

North–South Road
Phase 1A
F.A.I. Proj. No. STP-8930(1)

Scale: As Noted — Date: Dec. 22, 2004

SHEET No. S4.1 OF 43 SHEETS

ADD. 87

ORIGINAL PLAN — NOTE BOOK No. — SURVEY PLOTTED BY — DRAWN BY — TRACED BY — DESIGNED BY — QUANTITIES BY — CHECKED BY — DATE

NS-S401.DWG
PLOT 1 = 1

C:\ASHOS\01-17-05 ADD\NS-S401 ADD.dwg, 1/17/2005 12:42:35 PM, rSFinc.pc3, 1:1

FED. ROAD DIST. NO.	STATE	FED. AID PROJ. NO.	FISCAL YEAR	SHEET NO.	TOTAL SHEETS
HAWAII	HAW.	STP-8930(1)	2005	ADD. 88	144

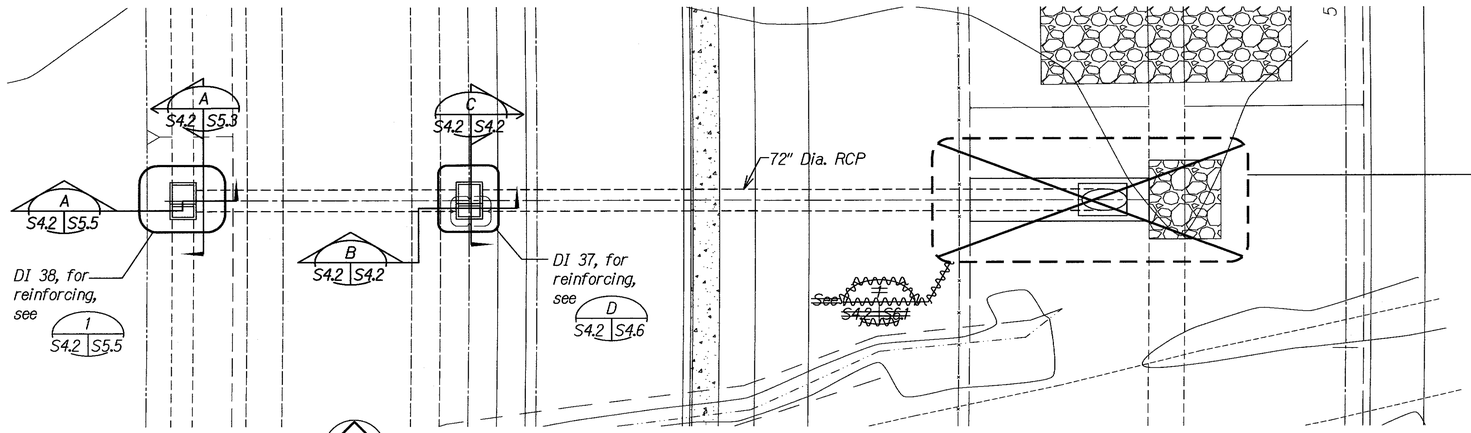

Deleted as Per Field Order 7a. (1)

DRAIN CULVERT "F" - LAYOUT PLAN (A S4.2 S4.2)

SCALE: 1" = 20'

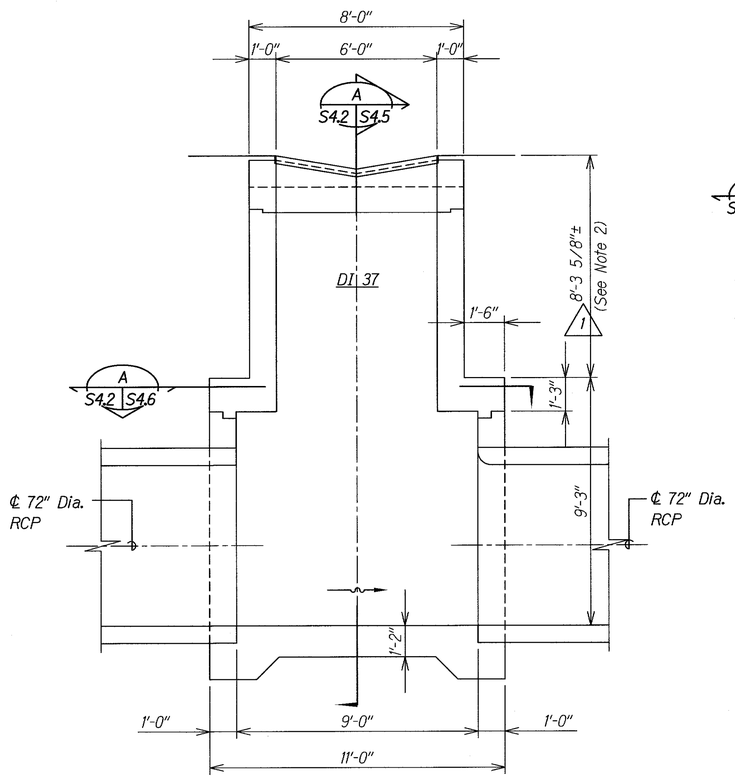

SECTION (B S4.2 S4.2)

SCALE: 3/8" = 1'-0"

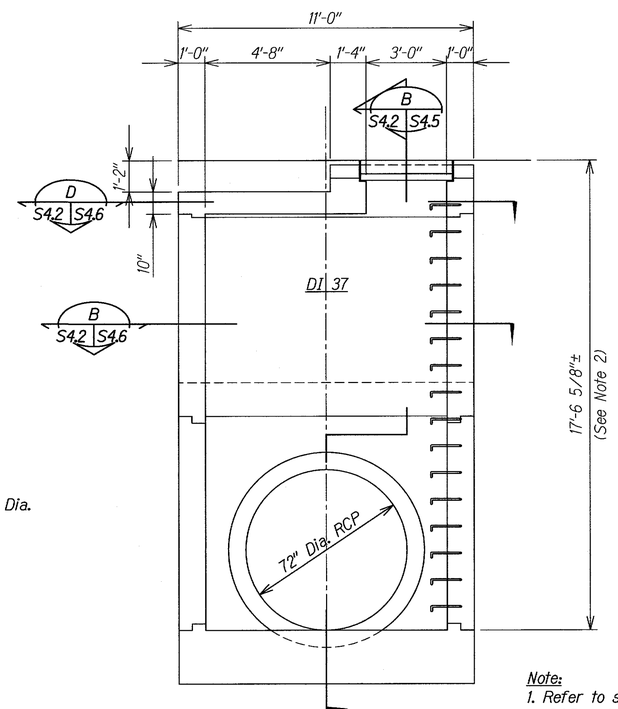

SECTION (C S4.2 S4.2)

SCALE: 3/8" = 1'-0"

DRAIN CULVERT "F" - SECTIONS AT DI 37 (1 S4.2 S4.2)

Note:
1. Refer to sheets S4.5 and S4.6 for reinforcing
2. Refer to civil drawings for DI elevations and verify dimensions.

DAVID K. FUJIWARA LICENSED PROFESSIONAL ENGINEER NO. 8104-S HAWAII, U.S.A.

THIS WORK WAS PREPARED BY ME OR UNDER MY SUPERVISION.

SIGNATURE — EXPIRATION DATE OF THE LICENSE 4-30-08

LEGEND FOR AS-BUILT POSTINGS

~~	Squiggly line for as-built deletion
~~100.00~~	Double line for as-built deletion
Roadway	Text for as-built posting

–	(1) As Built – Field Order 7a
1/18/05	(1) Added Dimension and Clarification
DATE	REVISION

STATE OF HAWAII
DEPARTMENT OF TRANSPORTATION
HIGHWAYS DIVISION

DRAIN CULVERT "F" - LAYOUT PLAN AND SECTIONS AT DI 37

North-South Road
Phase 1A
F.A.I. Proj. No. STP-8930(1)

Scale: As Noted — Date: Dec. 22, 2004

SHEET No. S4.2 OF 43 SHEETS

ORIGINAL PLAN — NOTE BOOK No. — SURVEY PLOTTED BY — DRAWN BY — TRACED BY — DESIGNED BY — QUANTITIES BY — CHECKED BY — DATE

"AS-BUILT"

ADD. 88

FED. ROAD DIST. NO.	STATE	FED. AID PROJ. NO.	FISCAL YEAR	SHEET NO.	TOTAL SHEETS
HAWAII	HAW.	STP-8930(1)	2005	ADD. 88	144

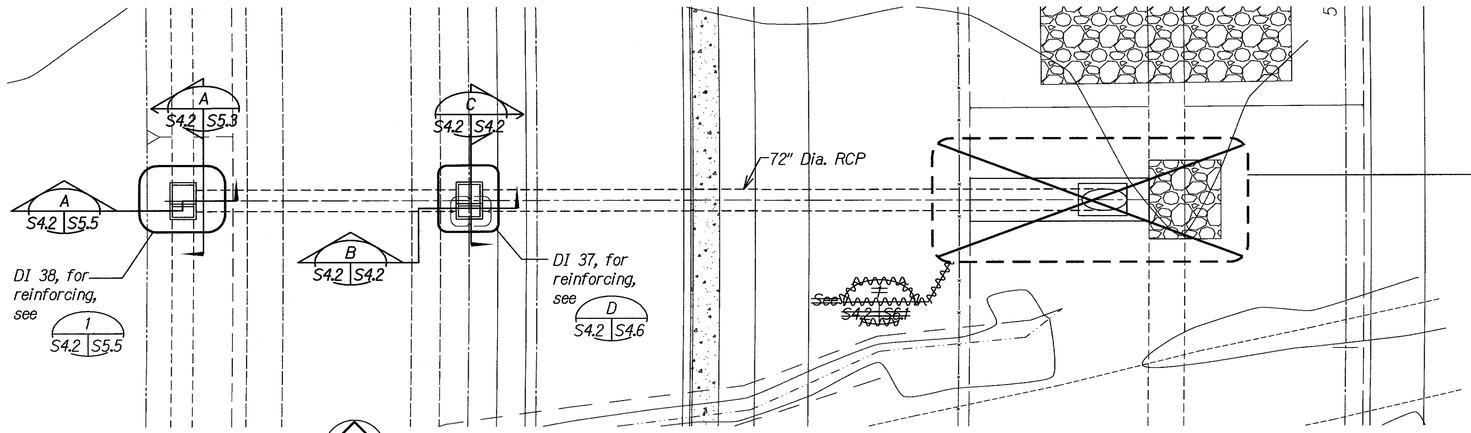

Deleted as Per Field Order 7a. (1)

DRAIN CULVERT "F" - LAYOUT PLAN (A S4.2 S4.2)

SCALE: 1" = 20'

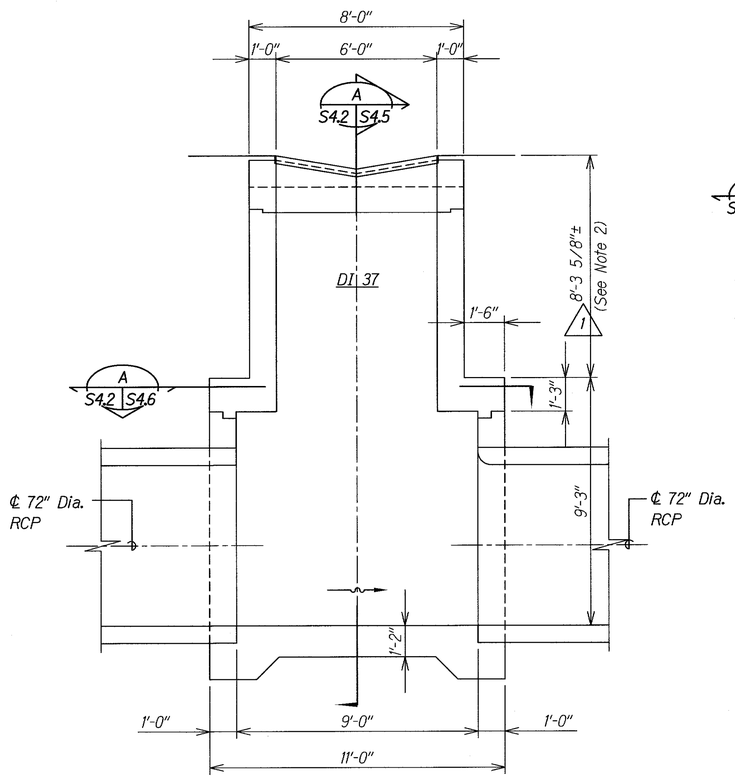

SECTION (B S4.2 S4.2)

SCALE: 3/8" = 1'-0"

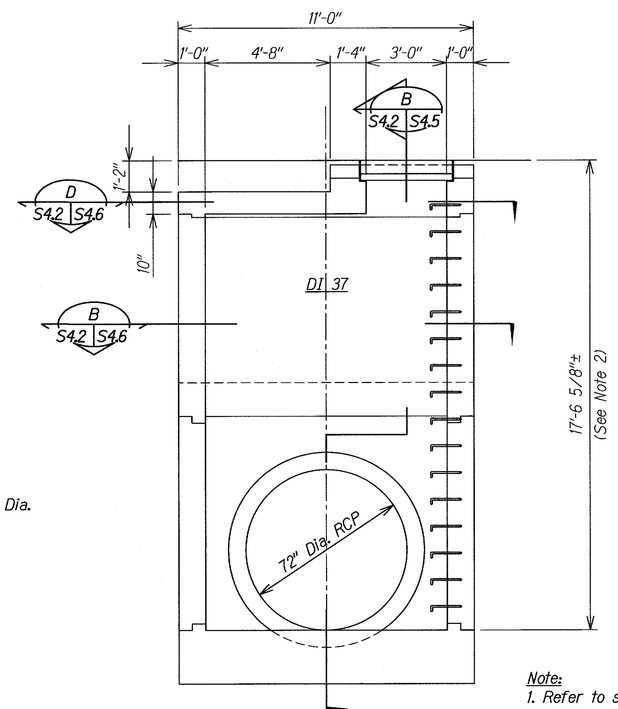

SECTION (C S4.2 S4.2)

SCALE: 3/8" = 1'-0"

DRAIN CULVERT "F" - SECTIONS AT DI 37 (1 S4.2 S4.2)

Note:
1. Refer to sheets S4.5 and S4.6 for reinforcing
2. Refer to civil drawings for DI elevations and verify dimensions.

DAVID K. FUJIWARA LICENSED PROFESSIONAL ENGINEER NO. 8104-S HAWAII, U.S.A.

THIS WORK WAS PREPARED BY ME OR UNDER MY SUPERVISION.

SIGNATURE — EXPIRATION DATE OF THE LICENSE 4-30-08

LEGEND FOR AS-BUILT POSTINGS

~~	Squiggly line for as-built deletion
~~100.00~~	Double line for as-built deletion
Roadway	Text for as-built posting

–	(1) As Built – Field Order 7a
1/18/05	(1) Added Dimension and Clarification
DATE	REVISION

STATE OF HAWAII
DEPARTMENT OF TRANSPORTATION
HIGHWAYS DIVISION

DRAIN CULVERT "F" - LAYOUT PLAN AND SECTIONS AT DI 37

North-South Road
Phase 1A
F.A.I. Proj. No. STP-8930(1)

Scale: As Noted — Date: Dec. 22, 2004

SHEET No. S4.2 OF 43 SHEETS

ORIGINAL PLAN — NOTE BOOK No. — SURVEY PLOTTED BY — DRAWN BY — TRACED BY — DESIGNED BY — QUANTITIES BY — CHECKED BY — DATE

"AS-BUILT"

ADD. 88

FED. ROAD DIST. NO.	STATE	FED. AID PROJ. NO.	FISCAL YEAR	SHEET NO.	TOTAL SHEETS
HAWAII	HAW.	STP-8930(1)	2005	ADD. 89	144

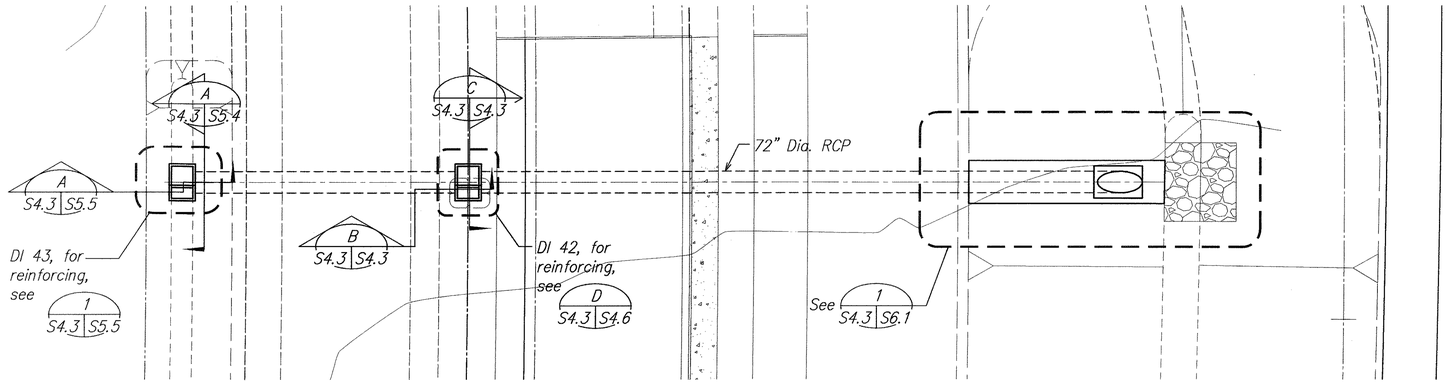

DRAIN CULVERT "G" – LAYOUT PLAN (A / S4.3 S4.3)

SCALE: 1" = 20'

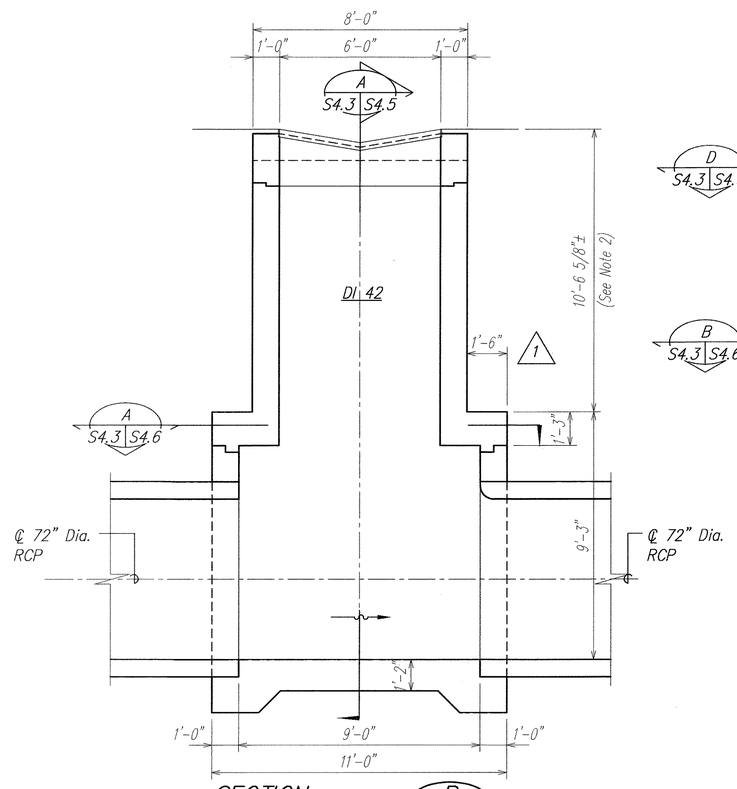

SECTION (B / S4.3 S4.3)

SCALE: 3/8" = 1'-0"

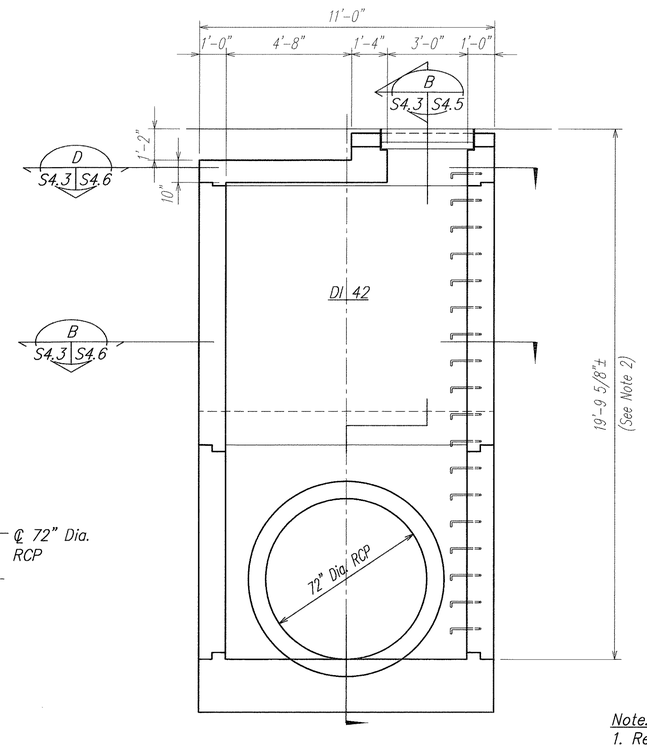

SECTION (C / S4.3 S4.3)

SCALE: 3/8" = 1'-0"

DRAIN CULVERT "G" – SECTIONS AT DI 42 (1 / S4.3 S4.3)

Note:
1. Refer to sheets S4.5 and S4.6 for reinforcing.
2. Refer to civil drawings for DI elevations and verify dimensions.

DATE	REVISION
1/18/05	1 Added Dimension and Clarification

ORIGINAL PLAN	SURVEY PLOTTED BY	DATE
	DRAWN BY	
	TRACED BY	
NOTE BOOK	DESIGNED BY	
No.	QUANTITIES BY	
	CHECKED BY	

THIS WORK WAS PREPARED BY ME OR UNDER MY SUPERVISION.

SIGNATURE — EXPIRATION DATE OF THE LICENSE 4-30-06

STATE OF HAWAII
DEPARTMENT OF TRANSPORTATION
HIGHWAYS DIVISION

DRAIN CULVERT "G" – LAYOUT PLAN AND SECTIONS AT DI 42

North–South Road
Phase 1A
F.A.I. Proj. No. STP–8930(1)

Scale: As Noted — Date: Dec. 22, 2004

SHEET No. S4.3 OF 43 SHEETS

NS-403.DWG
PLOT 1 = 1

FED. ROAD DIST. NO.	STATE	FED. AID PROJ. NO.	FISCAL YEAR	SHEET NO.	TOTAL SHEETS
HAWAII	HAW.	STP-8930(1)	2005	90	144

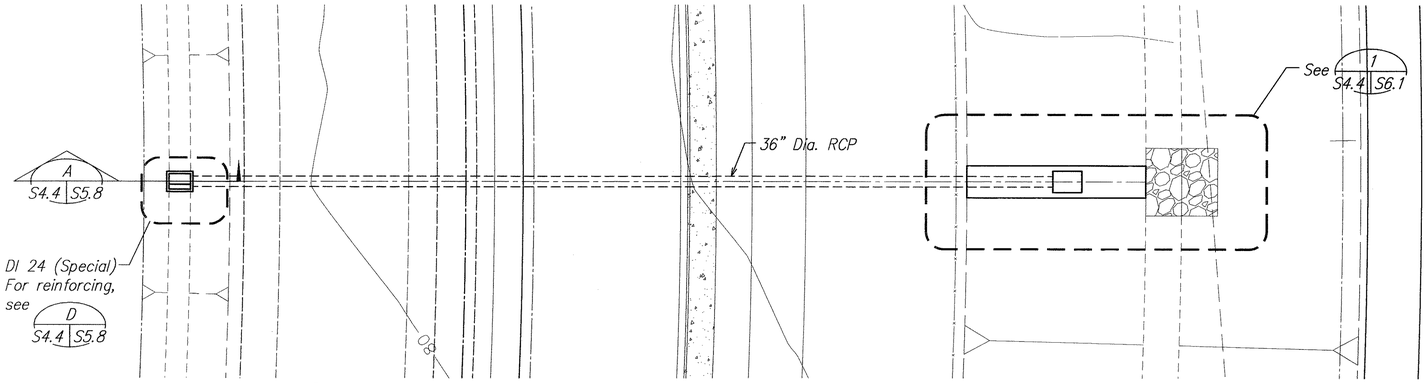

DRAIN CULVERT "R1" – LAYOUT PLAN (A / S4.4 S4.4)

SCALE: 1" = 20'

ORIGINAL PLAN	SURVEY PLOTTED BY	DATE
	DRAWN BY	
NOTE BOOK	TRACED BY	
	DESIGNED BY	
	QUANTITIES BY	
No.	CHECKED BY	

DAVID K. FUJIWARA
LICENSED PROFESSIONAL ENGINEER
NO. 8104-S
HAWAII, U.S.A.

THIS WORK WAS PREPARED BY ME OR UNDER MY SUPERVISION.

SIGNATURE — EXPIRATION DATE OF THE LICENSE 4-30-06

STATE OF HAWAII
DEPARTMENT OF TRANSPORTATION
HIGHWAYS DIVISION

DRAIN CULVERT "R1"
LAYOUT PLAN

North–South Road
Phase 1A
F.A.I. Proj. No. STP–8930(1)

Scale: As Noted — Date: Dec. 22, 2004

SHEET No. S4.4 OF 43 SHEETS

NS-404.DWG
PLOT 1 = 1

FED. ROAD DIST. NO.	STATE	FED. AID PROJ. NO.	FISCAL YEAR	SHEET NO.	TOTAL SHEETS
HAWAII	HAW.	STP-8930(1)	2005	ADD. 91	144

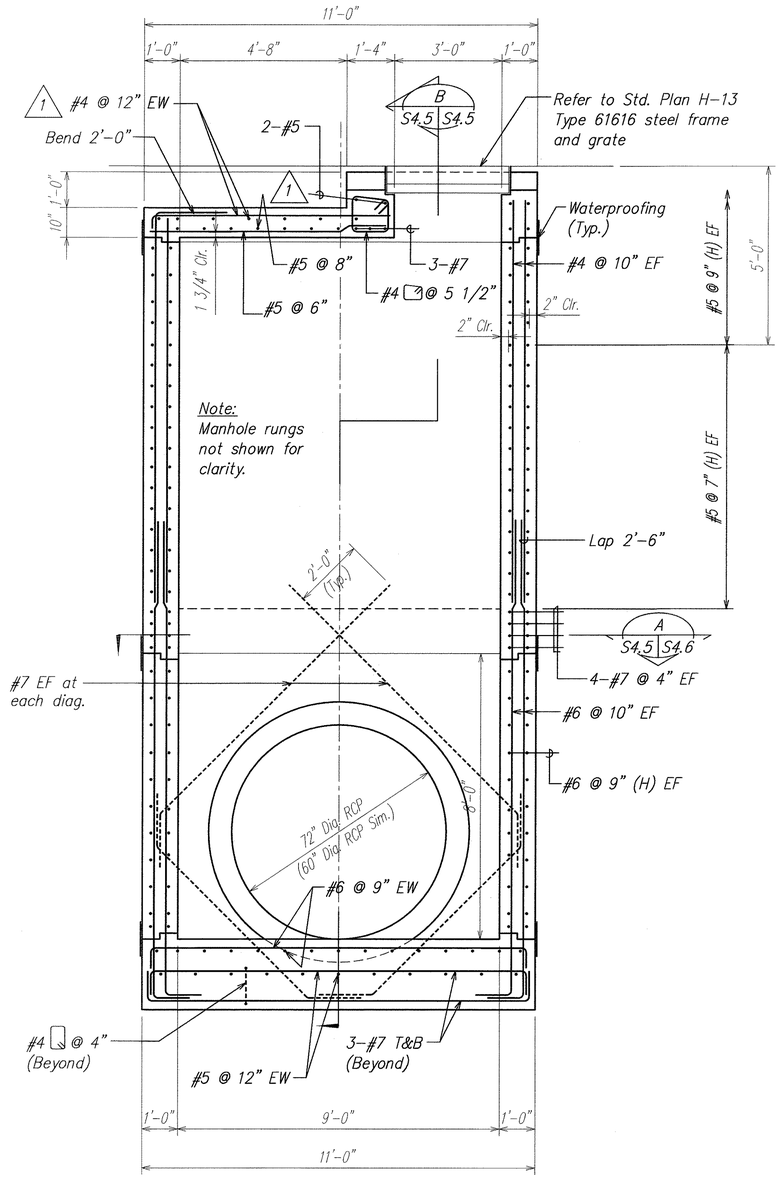

DRAIN CULVERT "G" – REINF. SECTION
(DRAIN CULVERT "E" AND "F" SIMILAR) A

SCALE: 1/2" = 1'-0"

S4.1, S4.2, S4.3, S4.5 S4.5

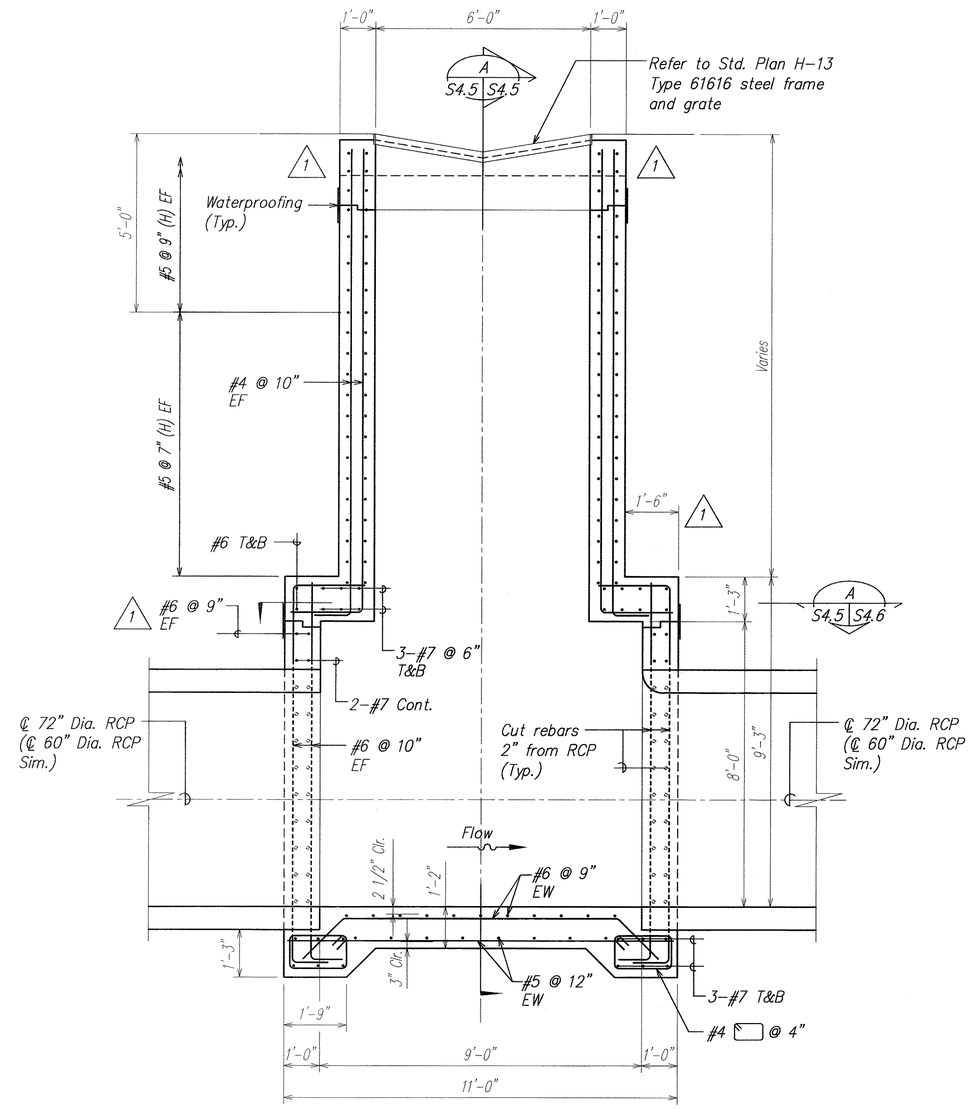

DRAIN CULVERT "G" – REINF. SECTION
(DRAIN CULVERT "E" AND "F" SIMILAR) B

SCALE: 1/2" = 1'-0"

S4.1, S4.2, S4.3, S4.5 S4.5

DATE	REVISION
1/18/05	1 Added Dimension, Added Reinforcing and Clarification

DAVID K. FUJIWARA
LICENSED PROFESSIONAL ENGINEER
NO. 8104-S
HAWAII, U.S.A.

THIS WORK WAS PREPARED BY ME OR UNDER MY SUPERVISION.

SIGNATURE — EXPIRATION DATE OF THE LICENSE 4-30-06

STATE OF HAWAII
DEPARTMENT OF TRANSPORTATION
HIGHWAYS DIVISION

DRAIN CULVERT "E", "F" AND G" SECTIONS

North-South Road
Phase 1A
F.A.I. Proj. No. STP-8930(1)

Scale: As Noted — Date: Dec. 22, 2004

SHEET No. S4.5 OF 43 SHEETS

ADD. 91

ORIGINAL PLAN — SURVEY PLOTTED BY — DRAWN BY — TRACED BY — DESIGNED BY — QUANTITIES BY — CHECKED BY — DATE

NOTE BOOK No.

NS-S405.DWG
PLOT 1 = 1

C:\KSF05\01-17-05 ADD\NS-S405 ADD.dwg, 1/17/2005 1:03:47 PM, KSFnc003, 1:1

FED. ROAD DIST. NO.	STATE	FED. AID PROJ. NO.	FISCAL YEAR	SHEET NO.	TOTAL SHEETS
HAWAII	HAW.	STP-8930(1)	2005	ADD. 92	144

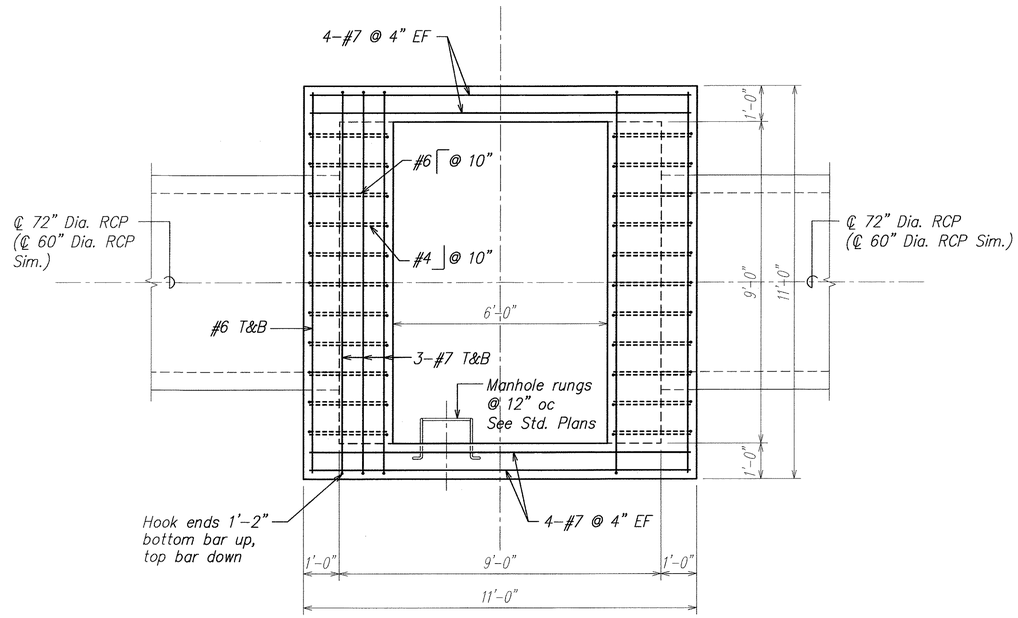

SECTION A
SCALE: 1/2" = 1'-0" S4.1, S4.2, S4.3, S4.5 | S4.6

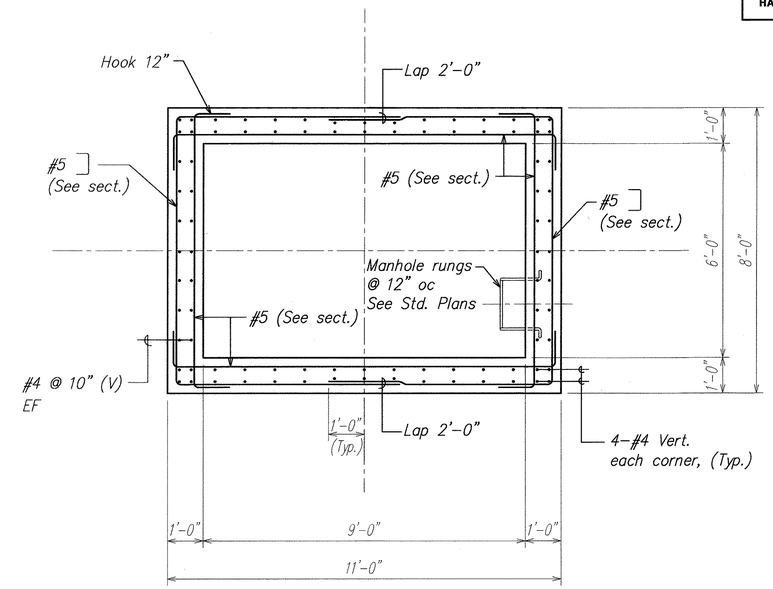

SECTION B
SCALE: 1/2" = 1'-0" S4.1, S4.2, S4.3 | S4.6

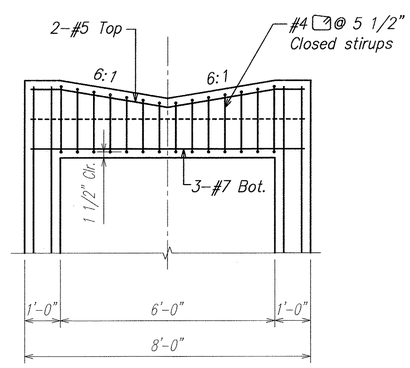

SECTION AT BEAM REINF. C
SCALE: 1/2" = 1'-0" S4.6 | S4.6

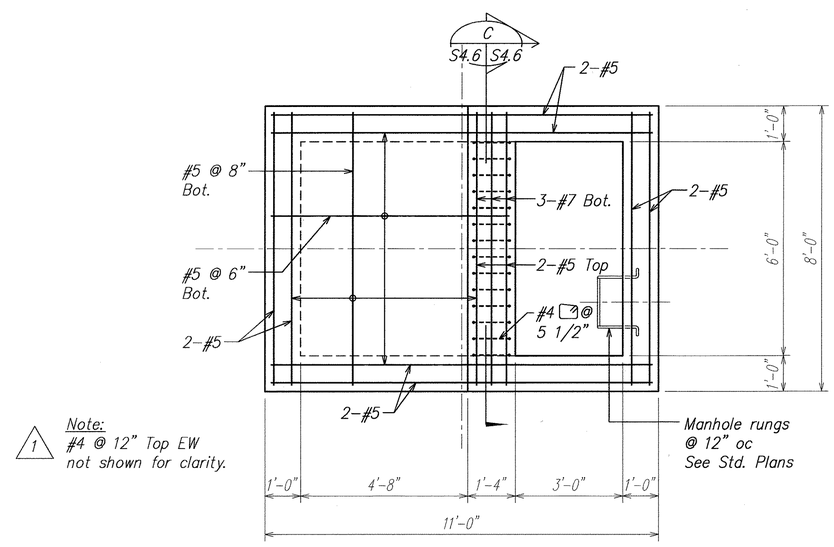

1 Note:
#4 @ 12" Top EW
not shown for clarity.

SECTION D
SCALE: 1/2" = 1'-0" S4.1, S4.2, S4.3 | S4.6

DAVID K. FUJIWARA
LICENSED PROFESSIONAL ENGINEER
NO. 8104-S
HAWAII, U.S.A.

THIS WORK WAS PREPARED BY ME OR UNDER MY SUPERVISION.

David K. Fujiwara 4-30-06
SIGNATURE EXPIRATION DATE OF THE LICENSE

DATE		REVISION
1/18/05	1	Added Note

STATE OF HAWAII
DEPARTMENT OF TRANSPORTATION
HIGHWAYS DIVISION

DRAIN CULVERT "E", "F" AND "G"
SECTIONS

North-South Road
Phase 1A
F.A.I. Proj. No. STP-8930(1)

Scale: As Noted Date: Dec. 22, 2004

SHEET No. S4.6 OF 43 SHEETS

ADD. 92

ORIGINAL PLAN	SURVEY PLOTTED BY	DATE
	DRAWN BY	
NOTE BOOK	TRACED BY	
	DESIGNED BY	
No.	QUANTITIES BY	
	CHECKED BY	

NS-S406.DWG
PLOT 1 = 1

C:\XS-DEV01-1-00 ADD\NS-S406 ADD.dwg, 1/7/2005 1:04:19 PM, KSFrio.pc3, 1:1

FED. ROAD DIST. NO.	STATE	FED. AID PROJ. NO.	FISCAL YEAR	SHEET NO.	TOTAL SHEETS
HAWAII	HAW.	STP-8930(1)	2005	ADD. 93	144

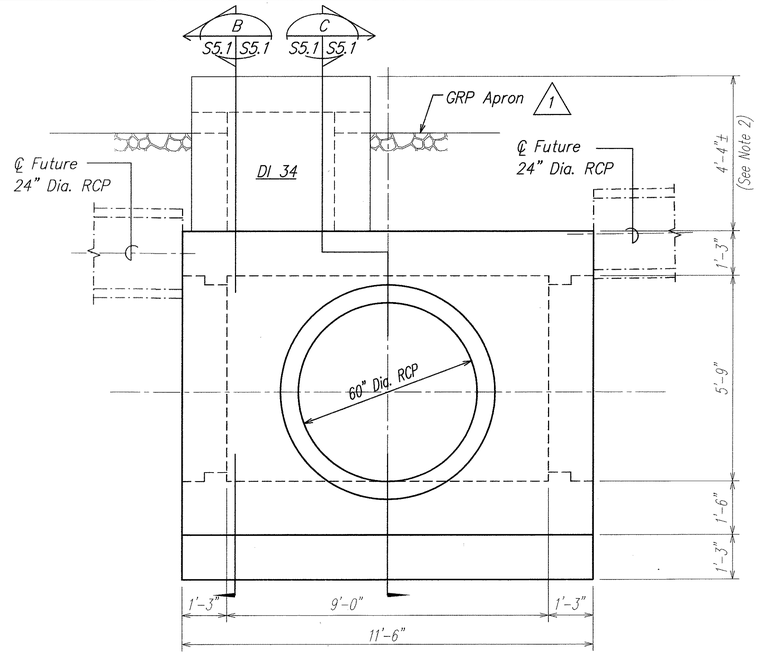

SECTION A S4.1 S5.1
SCALE: 1/2" = 1'-0"

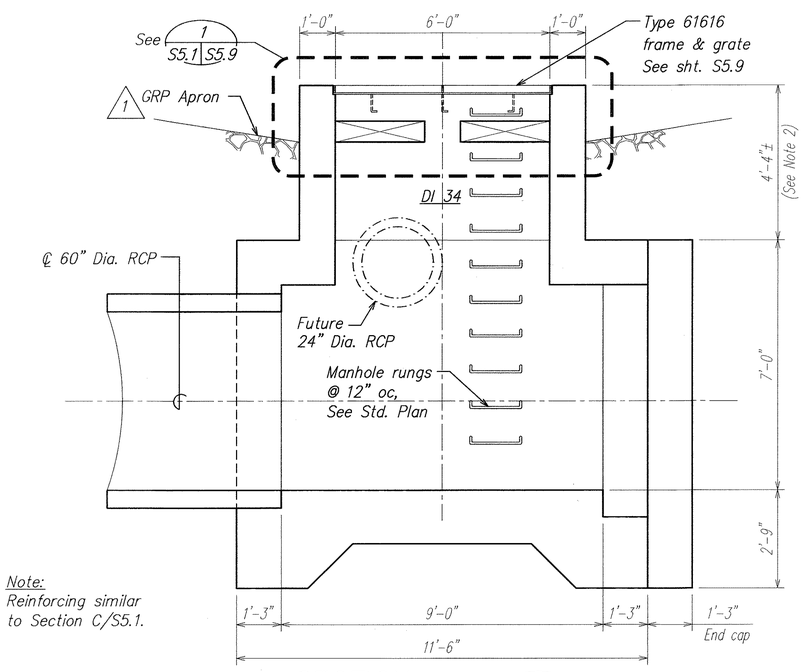

Note:
Reinforcing similar to Section C/S5.1.

SECTION B S5.1 S5.1
SCALE: 1/2" = 1'-0"

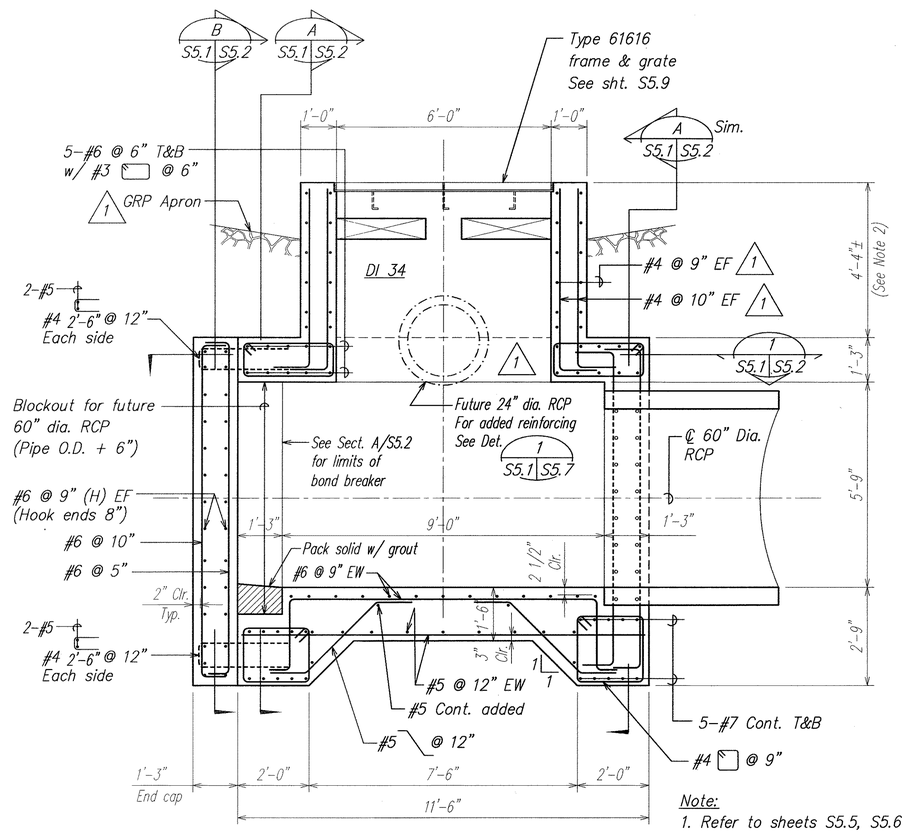

SECTION C S4.1, S5.1, S5.2 S5.1
SCALE: 1/2" = 1'-0"

Note:
1. Refer to sheets S5.5, S5.6 and S5.7 for reinforcing.
2. Refer to civil drawings for DI elevations and verify dimensions.

DAVID K. FUJIWARA
LICENSED PROFESSIONAL ENGINEER
NO. 8104-S
HAWAII, U.S.A.

THIS WORK WAS PREPARED BY ME OR UNDER MY SUPERVISION.

David K. Fujiwara 4-30-06
SIGNATURE EXPIRATION DATE OF THE LICENSE

DATE	REVISION
1/18/05	1 Clarification of Notes

STATE OF HAWAII
DEPARTMENT OF TRANSPORTATION
HIGHWAYS DIVISION

DRAIN CULVERT "E"
SECTIONS AT DI 34

North-South Road
Phase 1A
F.A.I. Proj. No. STP-8930(1)

Scale: As Noted Date: Dec. 22, 2004

SHEET No. S5.1 OF 43 SHEETS

ORIGINAL PLAN
NOTE BOOK No.
SURVEY PLOTTED BY
DRAWN BY
TRACED BY
DESIGNED BY
QUANTITIES BY
CHECKED BY
DATE

NS-S001.DWG
PLOT 1 = 1

C:\XS-05\07-17-05 ADD1\NS-S001 ADD1.dwg, 1/7/2005 1:04:47 PM, KSFrrc.pc3, 1:

FED. ROAD DIST. NO.	STATE	FED. AID PROJ. NO.	FISCAL YEAR	SHEET NO.	TOTAL SHEETS
HAWAII	HAW.	STP-8930(1)	2005	ADD. 94	144

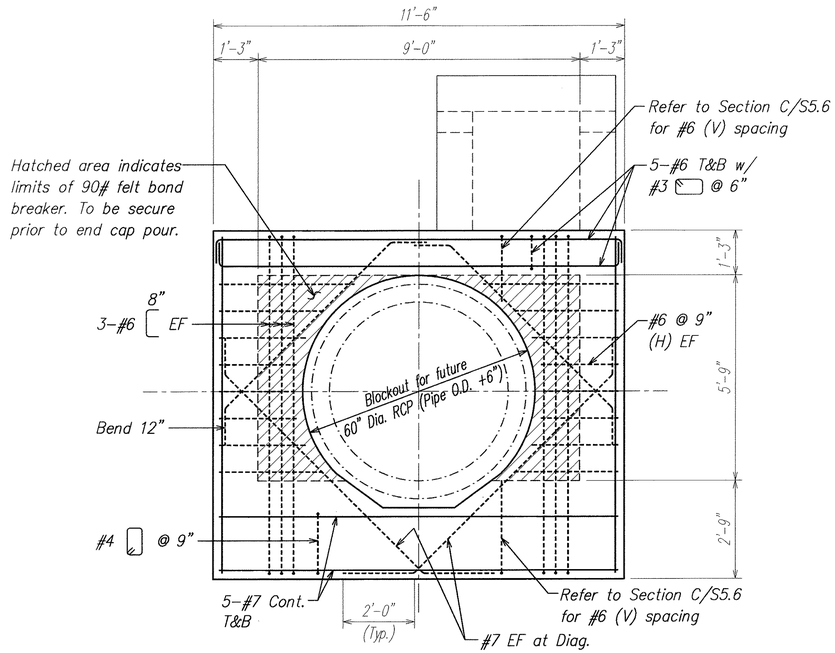

SECTION A
SCALE: 1/2" = 1'-0" S5.1 S5.2

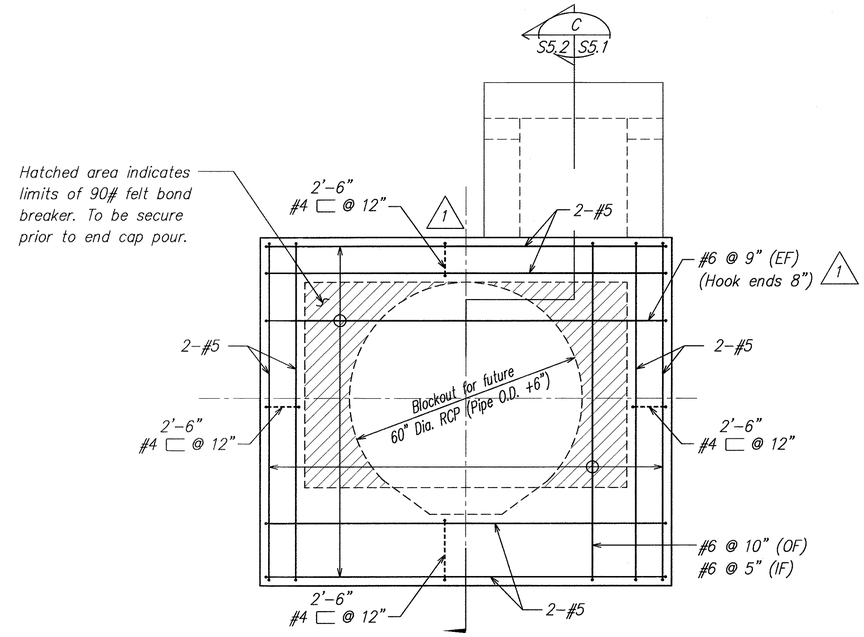

SECTION B
SCALE: 1/2" = 1'-0" S5.1 S5.2

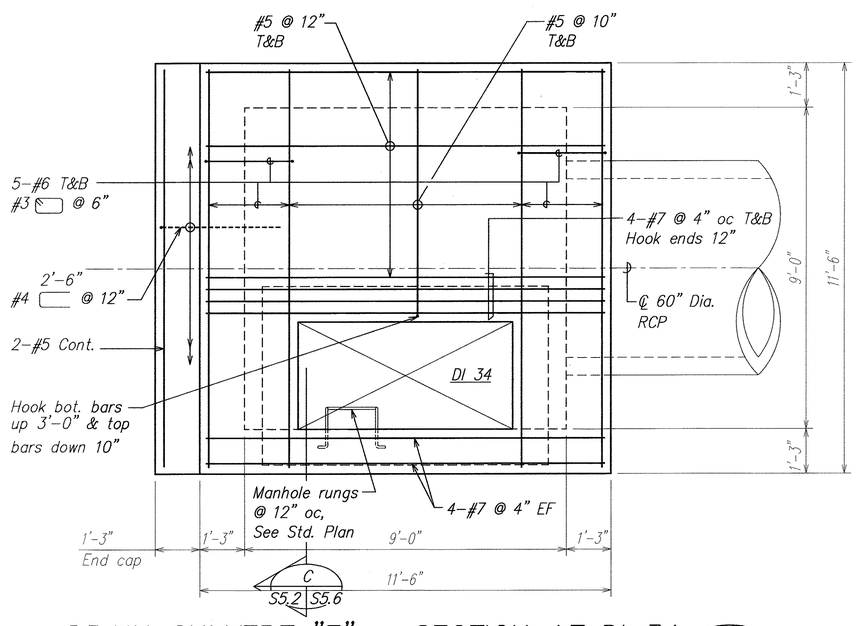

DRAIN CULVERT "E" - SECTION AT DI 34 1
SCALE: 1/2" = 1'-0" S4.1, S5.1 S5.2

ORIGINAL PLAN	SURVEY PLOTTED BY	DATE
	TRACED BY	
NOTE BOOK	DESIGNED BY	
No.	QUANTITIES BY	
	CHECKED BY	

DATE	REVISION
1/18/05	1 Clarification of Notes and Clarify Rebar

DAVID K. FUJIWARA LICENSED PROFESSIONAL ENGINEER NO. 8104-S HAWAII, U.S.A.

THIS WORK WAS PREPARED BY ME OR UNDER MY SUPERVISION.

SIGNATURE — EXPIRATION DATE OF THE LICENSE 4-30-06

STATE OF HAWAII
DEPARTMENT OF TRANSPORTATION
HIGHWAYS DIVISION

DRAIN CULVERT "E"
SECTIONS AT DI 34

North-South Road
Phase 1A
F.A.I. Proj. No. STP-8930(1)

Scale: As Noted Date: Dec. 22, 2004

SHEET No. S5.2 OF 43 SHEETS

ADD. 94

NS-S502.DWG
PLOT 1 = 1

FED. ROAD DIST. NO.	STATE	FED. AID PROJ. NO.	FISCAL YEAR	SHEET NO.	TOTAL SHEETS
HAWAII	HAW.	STP-8930(1)	2005	ADD. 95	144

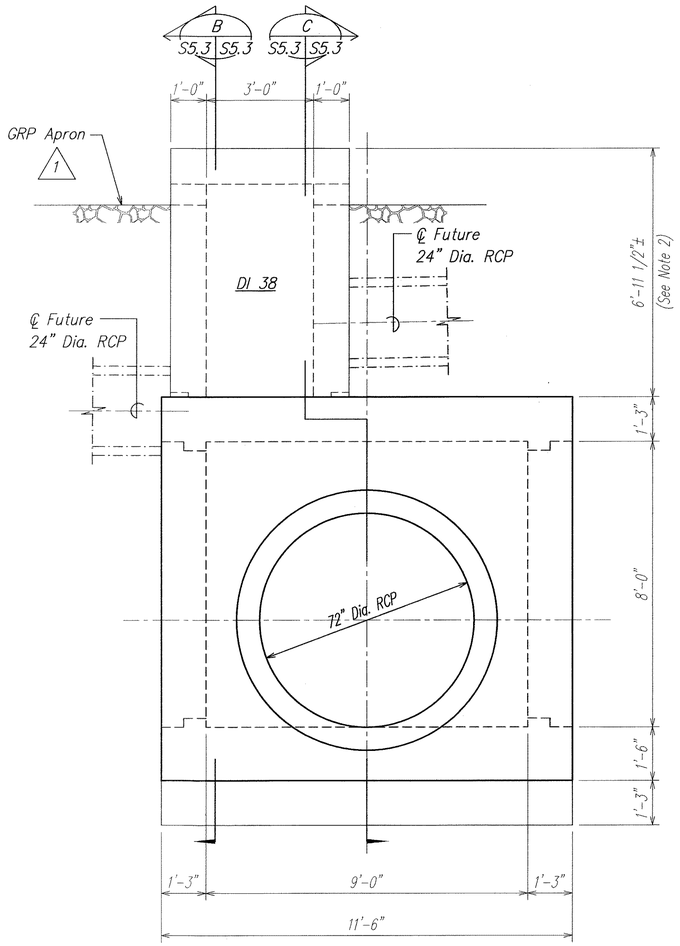

SECTION A
SCALE: 1/2" = 1'-0" S4.2 S5.3

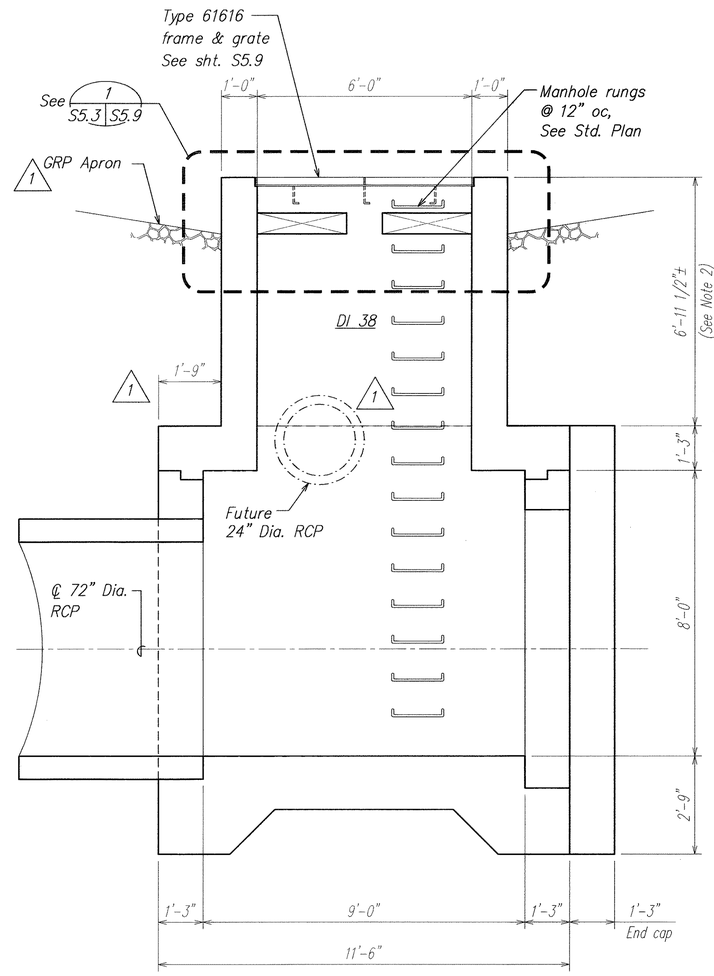

SECTION B
SCALE: 1/2" = 1'-0" S5.3 S5.3

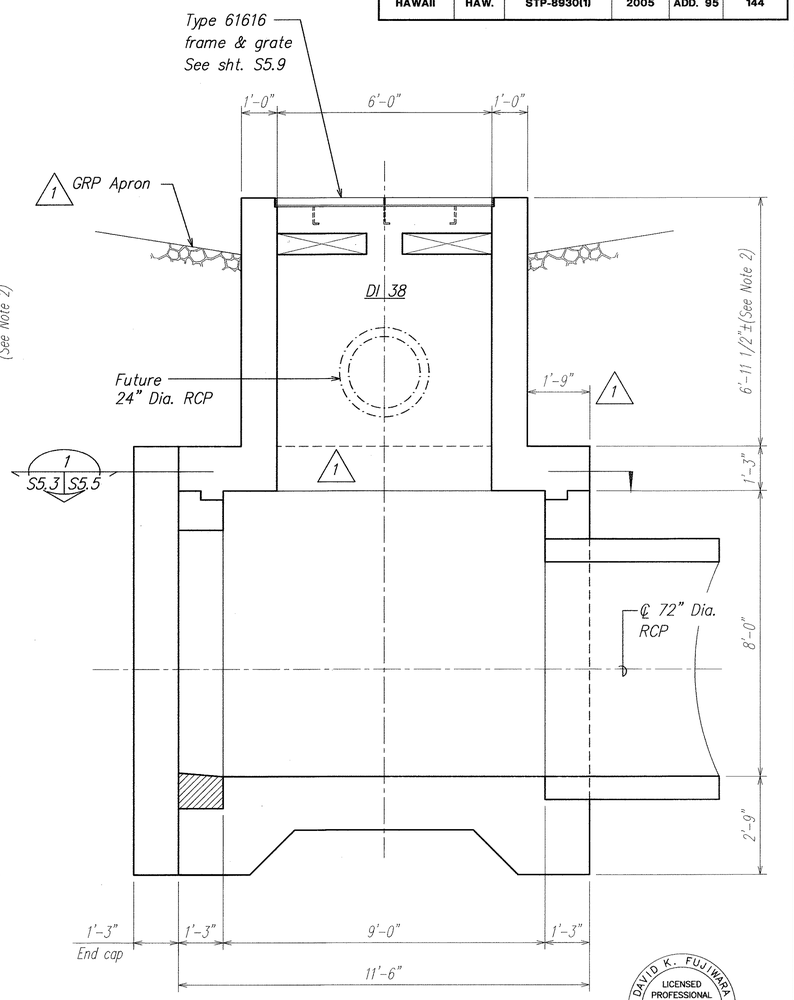

SECTION C
SCALE: 1/2" = 1'-0" S5.3 S5.3

Note:
1. Refer to sheets S5.5, S5.6 and S5.7 for reinforcing.
2. Refer to civil drawings for DI elevations and verify dimensions.

DAVID K. FUJIWARA
LICENSED PROFESSIONAL ENGINEER
NO. 8104-S
HAWAII, U.S.A.

THIS WORK WAS PREPARED BY ME OR UNDER MY SUPERVISION.

SIGNATURE — EXPIRATION DATE OF THE LICENSE 4-30-06

DATE	REVISION
1/18/05	1 Clarification of Note and Added Dimension

STATE OF HAWAII
DEPARTMENT OF TRANSPORTATION
HIGHWAYS DIVISION

DRAIN CULVERT "F"
SECTIONS AT DI 38

North-South Road
Phase 1A
F.A.I. Proj. No. STP-8930(1)

Scale: As Noted — Date: Dec. 22, 2004

SHEET No. S5.3 OF 43 SHEETS

ADD. 95

ORIGINAL PLAN — NOTE BOOK No. ____
SURVEY PLOTTED BY — DATE
DRAFT BY
TRACED BY
DESIGNED BY
QUANTITIES BY
CHECKED BY

NS-SS03.DWG
PLOT 1 = 1

C:\YS-05\01-17-05 ADD'\NS-SS03 ADD'.dwg, 1/7/2005 1:03:36 PM, KSFinc.ctb3, 1:1

FED. ROAD DIST. NO.	STATE	FED. AID PROJ. NO.	FISCAL YEAR	SHEET NO.	TOTAL SHEETS
HAWAII	HAW.	STP-8930(1)	2005	ADD. 96	144

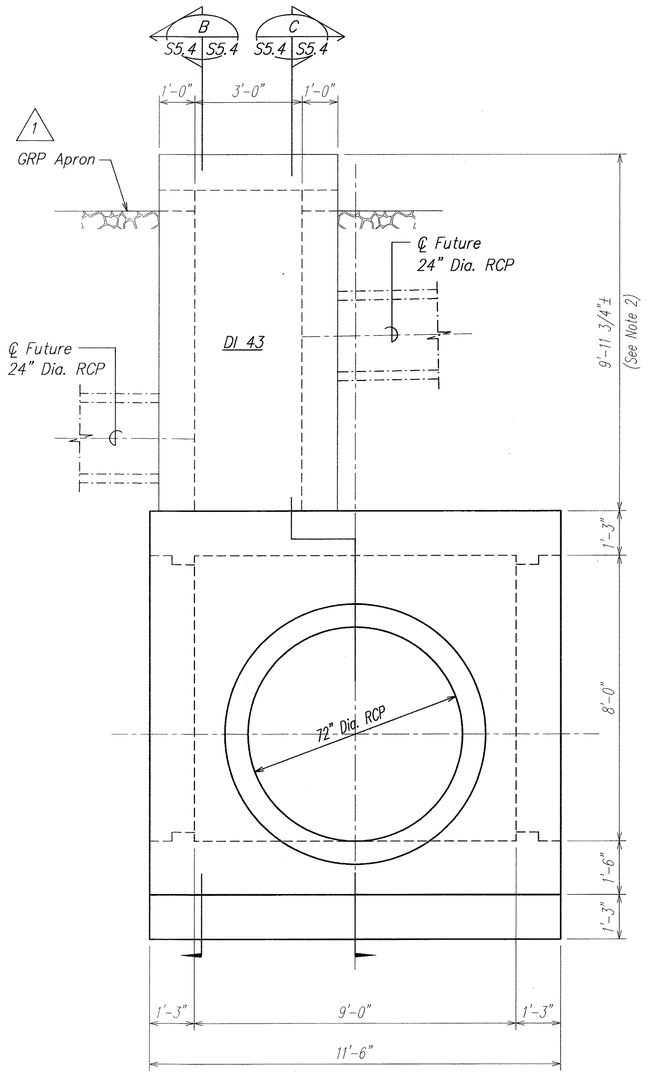

SECTION A
SCALE: 1/2" = 1'-0"
S4.3 S5.4

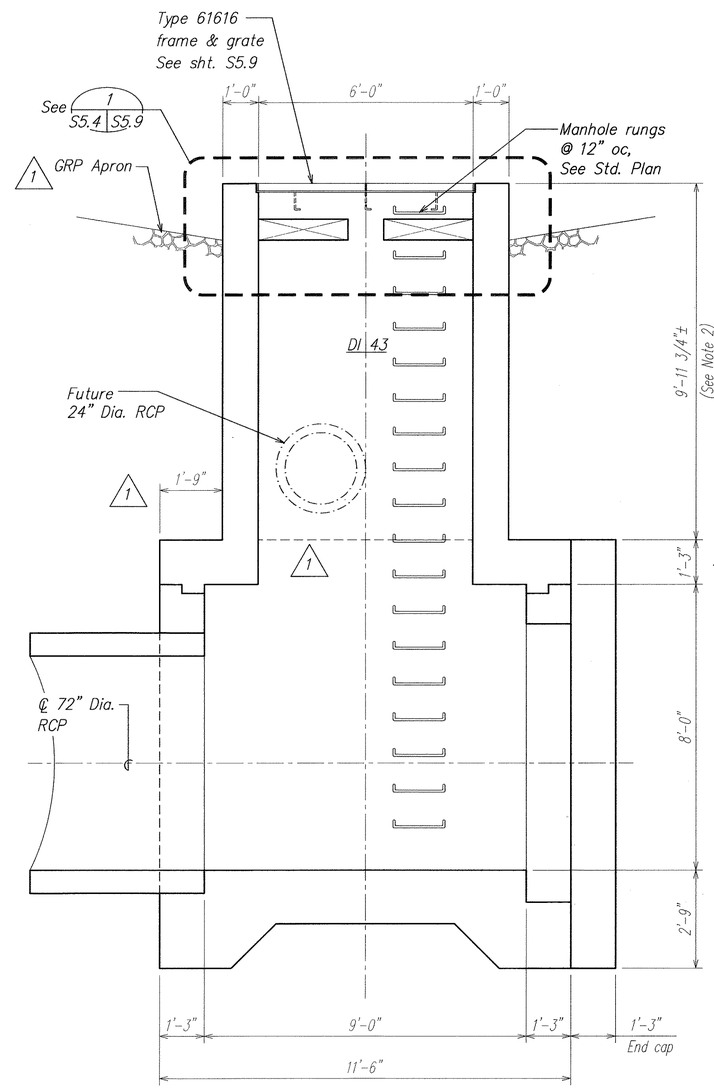

SECTION B
SCALE: 1/2" = 1'-0"
S5.4 S5.4

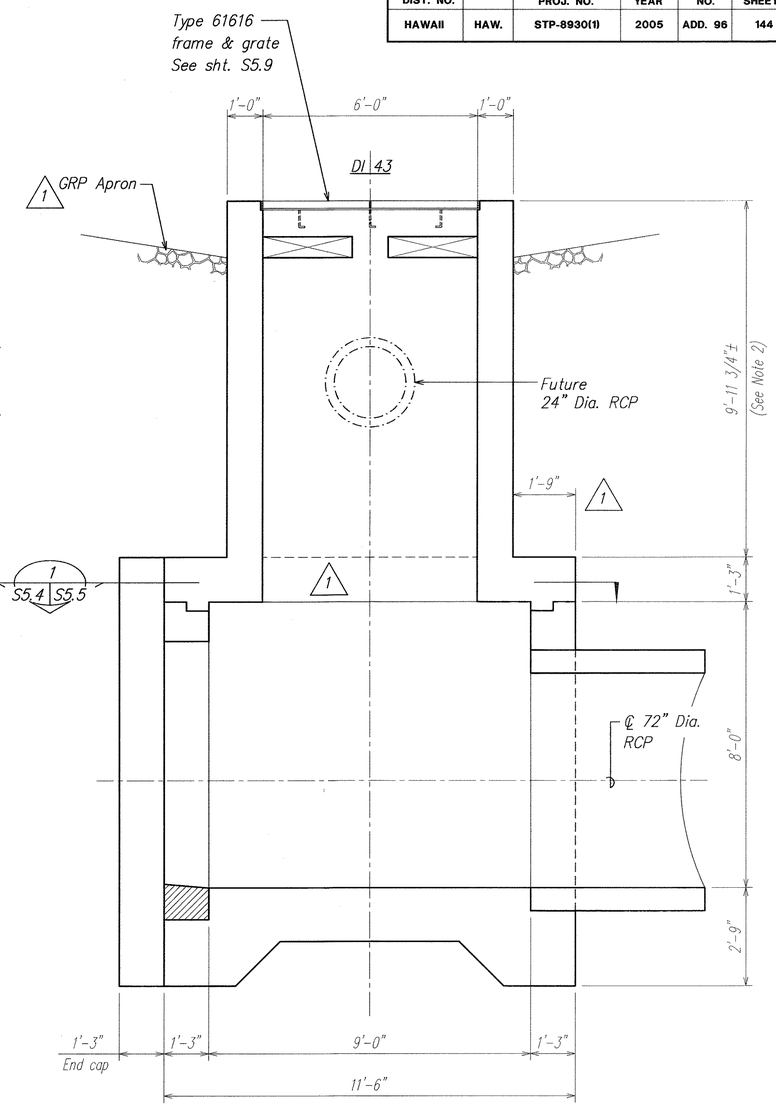

SECTION C
SCALE: 1/2" = 1'-0"
S5.4 S5.4

DAVID K. FUJIWARA
LICENSED PROFESSIONAL ENGINEER
NO. 8104-S
HAWAII, U.S.A.

THIS WORK WAS PREPARED BY ME OR UNDER MY SUPERVISION.

David K. Fujiwara 4-30-06
SIGNATURE EXPIRATION DATE OF THE LICENSE

Note:
1. Refer to sheets S5.5, S5.6 and S5.7 for reinforcing.
2. Refer to civil drawings for DI elevations and verify dimensions.

DATE	REVISION
1/18/05	1 Clarification of Notes and Added Dimensions

STATE OF HAWAII
DEPARTMENT OF TRANSPORTATION
HIGHWAYS DIVISION

DRAIN CULVERT "C"
SECTIONS AT DI 43

North-South Road
Phase 1A
F.A.I. Proj. No. STP-8930(1)

Scale: As Noted Date: Dec. 22, 2004

SHEET No. S5.4 OF 43 SHEETS

ADD. 96

ORIGINAL PLAN	SURVEY PLOTTED BY	DATE
	DRAWN BY	"
NOTE BOOK	TRACED BY	"
	DESIGNED BY	"
	QUANTITIES BY	"
No.	CHECKED BY	"

NS-S504.DWG
PLOT 1 = 1

C:\KSH05\01-17-05 ADD1\NS S504 ADD1.dwg, 1/17/2005 1:06:02 PM, KSFplot3, 1:1

FED. ROAD DIST. NO.	STATE	FED. AID PROJ. NO.	FISCAL YEAR	SHEET NO.	TOTAL SHEETS
HAWAII	HAW.	STP-8930(1)	2005	ADD. 97	144

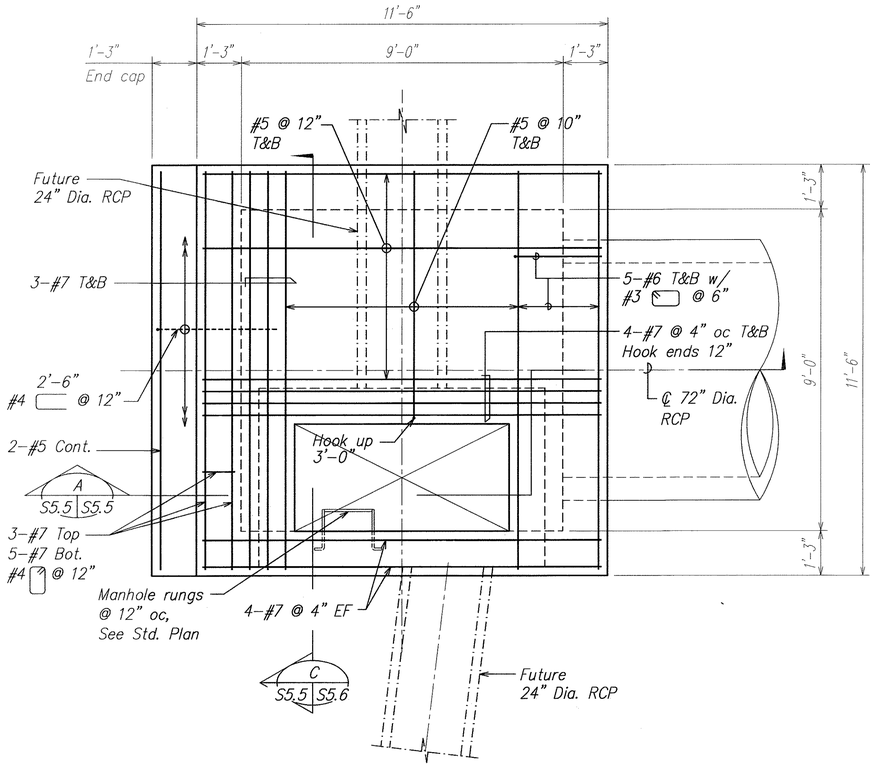

DRAIN CULVERT "F" & "G" – SECTION AT DI 38 & 43 (1)

SCALE: 1/2" = 1'-0"

S4.2, S4.3, S5.3, S5.4, S5.5 S5.5

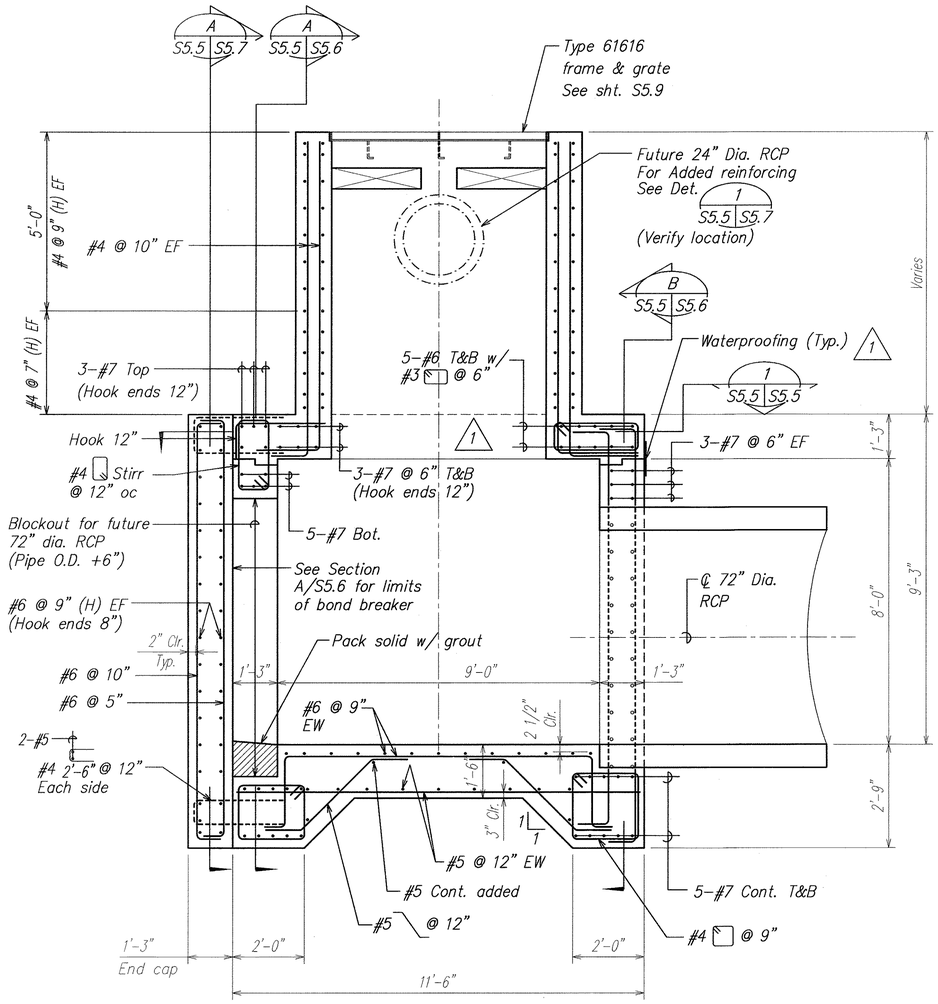

SECTION (A)

SCALE: 1/2" = 1'-0"

S4.2, S4.3, S5.5, S5.6 S5.7 S5.5

DAVID K. FUJIWARA LICENSED PROFESSIONAL ENGINEER NO. 8104-S HAWAII, U.S.A.

THIS WORK WAS PREPARED BY ME OR UNDER MY SUPERVISION.

SIGNATURE — EXPIRATION DATE OF THE LICENSE 4-30-06

DATE	REVISION
1/18/05	1 Clarification

STATE OF HAWAII
DEPARTMENT OF TRANSPORTATION
HIGHWAYS DIVISION

DRAIN CULVERT "F" AND "G" SECTIONS AT DI 38 AND 43

North–South Road
Phase 1A
F.A.I. Proj. No. STP-8930(1)

Scale: As Noted — Date: Dec. 22, 2004

SHEET No. S5.5 OF 43 SHEETS

ORIGINAL PLAN — NOTE BOOK No. — SURVEY PLOTTED BY — DRAWN BY — TRACED BY — DESIGNED BY — QUANTITIES BY — CHECKED BY — DATE

NS-S505.DWG PLOT 1 = 1

C:\KSF05\01-17-05 ADD\NS-S505 ADD.dwg, 1/17/2005 1:06:26 PM, KSFrosch, 1:1

FED. ROAD DIST. NO.	STATE	FED. AID PROJ. NO.	FISCAL YEAR	SHEET NO.	TOTAL SHEETS
HAWAII	HAW.	STP-8930(1)	2005	ADD. 98	144

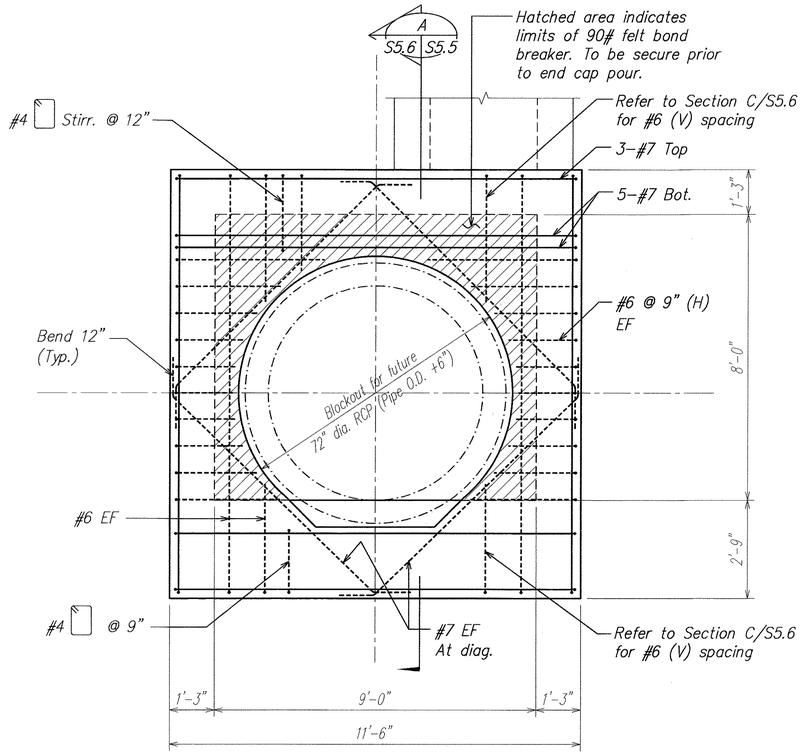

SECTION A (S5.5 | S5.6)
SCALE: 1/2" = 1'-0"

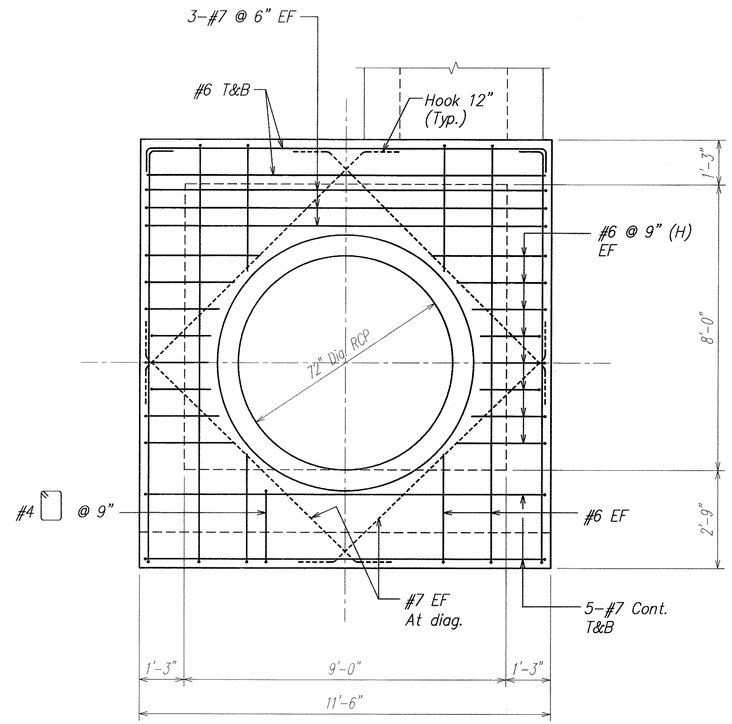

SECTION B (S5.5 | S5.6)
SCALE: 1/2" = 1'-0"

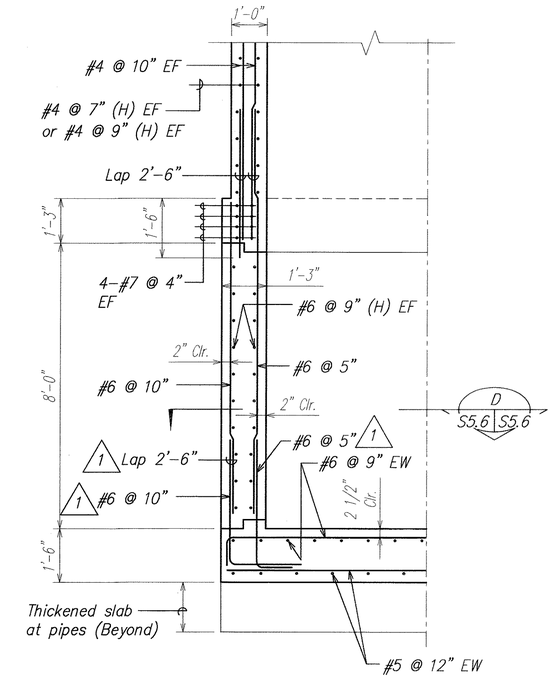

SECTION C (S5.2, S5.5, S5.6 | S5.6)
SCALE: 1/2" = 1'-0"

1

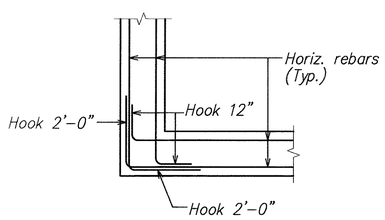

SECTION D (S5.6 | S5.6)
SCALE: 1/2" = 1'-0"

DAVID K. FUJIWARA
LICENSED PROFESSIONAL ENGINEER
NO. 8104-S
HAWAII, U.S.A.

THIS WORK WAS PREPARED BY ME OR UNDER MY SUPERVISION.

SIGNATURE — EXPIRATION DATE OF THE LICENSE 4-30-06

ORIGINAL PLAN	SURVEY PLOTTED BY	DATE
	DRAWN BY	
	TRACED BY	
NOTE BOOK	DESIGNED BY	
	QUANTITIES BY	
No.	CHECKED BY	

DATE	REVISION
1/18/05	1 Clarification of Note

STATE OF HAWAII
DEPARTMENT OF TRANSPORTATION
HIGHWAYS DIVISION

DRAIN CULVERT "E", "F" AND "G" SECTIONS

North-South Road
Phase 1A
F.A.I. Proj. No. STP-8930(1)

Scale: As Noted — Date: Dec. 22, 2004

SHEET No. S5.6 OF 43 SHEETS

ADD. 98

NS-S506.DWG
PLOT 1 = 1

C:\KSH-DE\01-12-05 ADD1\NS-S506 ADD1.dwg, 1/17/2005 6:59 PM, KSFrc.ctb

FED. ROAD DIST. NO.	STATE	FED. AID PROJ. NO.	FISCAL YEAR	SHEET NO.	TOTAL SHEETS
HAWAII	HAW.	STP-8930(1)	2005	ADD. 99	144

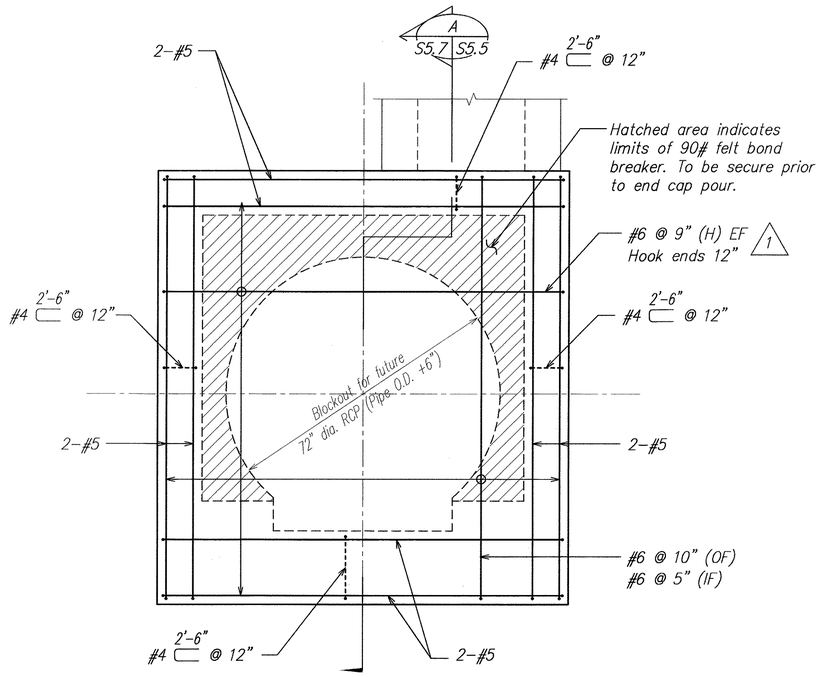

SECTION A
SCALE: 1/2" = 1'-0"
S5.5 S5.7

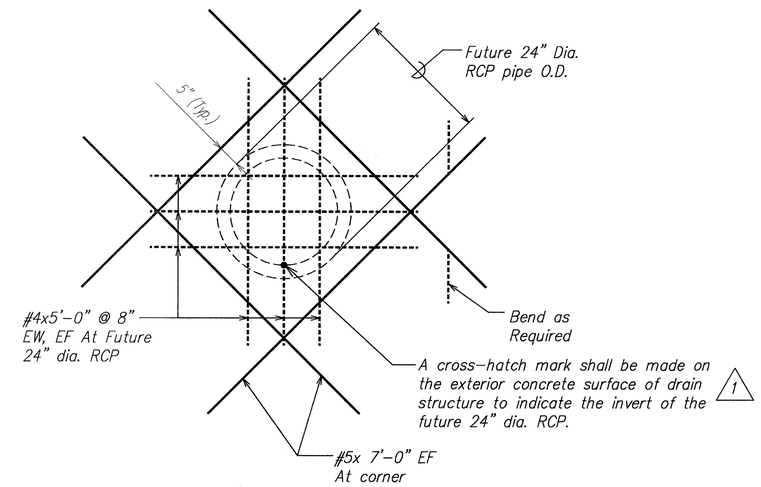

REINF. AT FUTURE 24" DIA. RCP 1
SCALE: 3/4" = 1'-0"
S2.1, S5.1, S5.5, S5.7 S5.7
1

ORIGINAL PLAN	SURVEY PLOTTED BY	DATE
	DRAWN BY	
NOTE BOOK	TRACED BY	
	DESIGNED BY	
No.	QUANTITIES BY	
	CHECKED BY	

DATE	REVISION
1/18/05	1 Clarification of Note

DAVID K. FUJIWARA
LICENSED PROFESSIONAL ENGINEER
NO. 8104-S
HAWAII, U.S.A.

THIS WORK WAS PREPARED BY ME OR UNDER MY SUPERVISION.

SIGNATURE — EXPIRATION DATE OF THE LICENSE 4-30-06

STATE OF HAWAII
DEPARTMENT OF TRANSPORTATION
HIGHWAYS DIVISION

DRAIN CULVERT "E", "F" AND "G"
SECTION

North-South Road
Phase 1A
F.A.I. Proj. No. STP-8930(1)

Scale: As Noted — Date: Dec. 22, 2004

SHEET No. S5.7 OF 43 SHEETS

ADD. 99

NS-S507.DWG
PLOT 1 = 1

C:\WSDOT\01-7-05 ADD\NS-S506 ADD.dwg, 7/17/2005 1:07:14 PM, KSFinance3, 1:

FED. ROAD DIST. NO.	STATE	FED. AID PROJ. NO.	FISCAL YEAR	SHEET NO.	TOTAL SHEETS
HAWAII	HAW.	STP-8930(1)	2005	ADD. 100	144

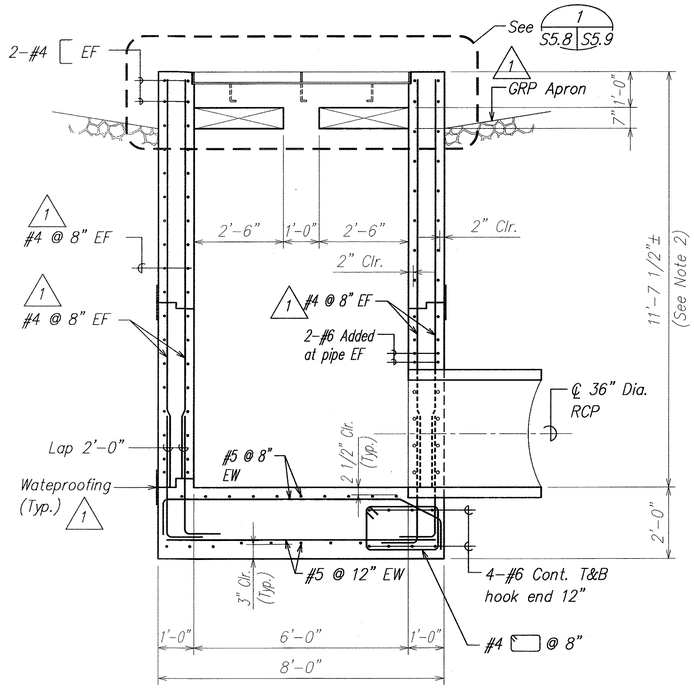

SECTION A
SCALE: 1/2" = 1'-0" S4.4, S5.8 S5.8

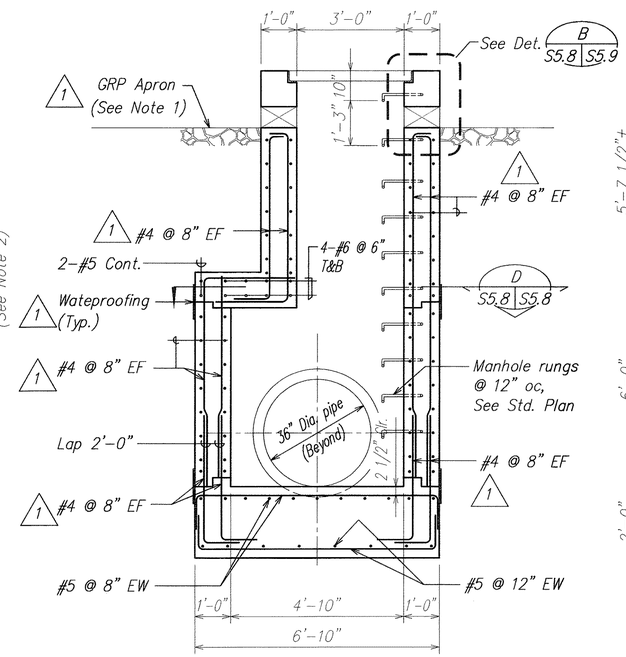

SECTION B
SCALE: 1/2" = 1'-0" S5.8 S5.8

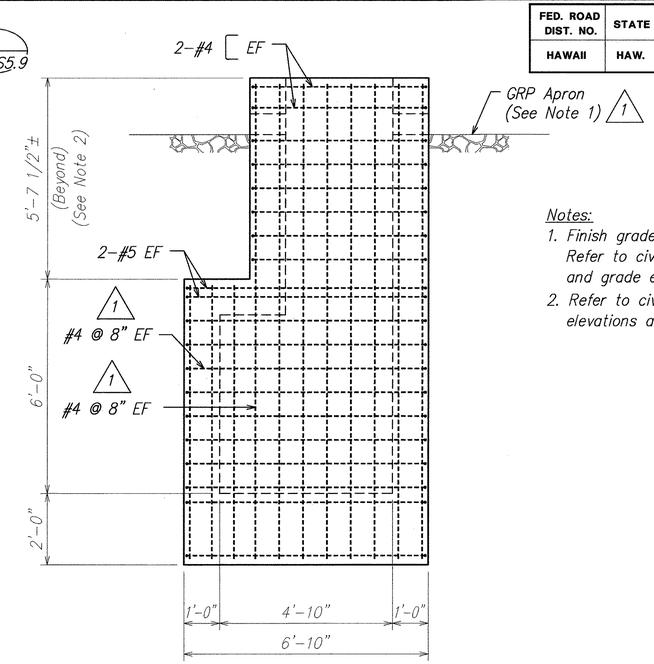

SECTION C
SCALE: 1/2" = 1'-0" S5.8 S5.8

Notes:
1. Finish grades are approximate Refer to civil plans for slopes and grade elevations.
2. Refer to civil drawings for DI elevations and verify dimensions.

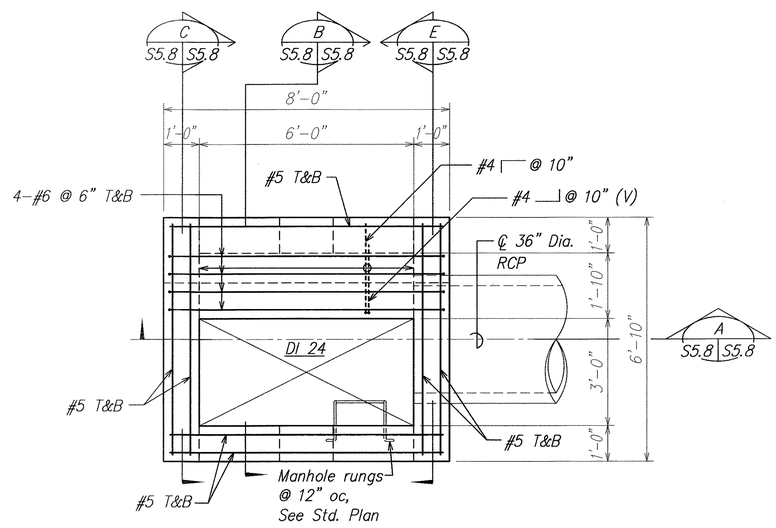

SECTION D
SCALE: 1/2" = 1'-0" S4.4, S5.8 S5.8

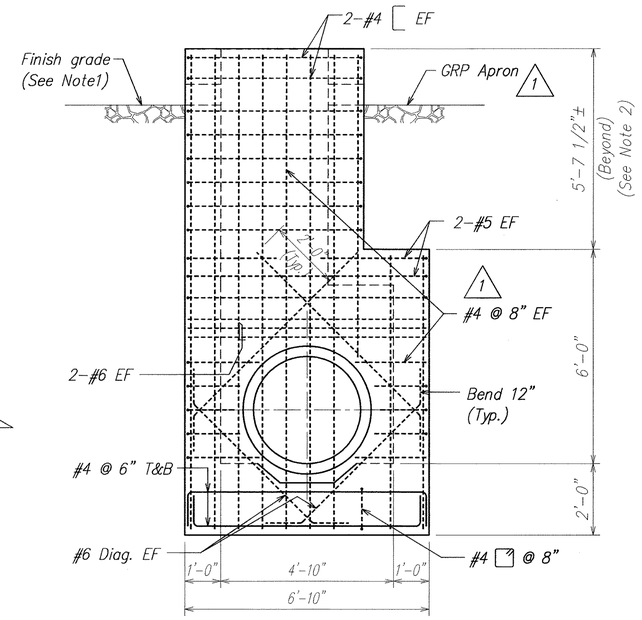

SECTION E
SCALE: 1/2" = 1'-0" S5.8 S5.8

DATE	REVISION
1/18/05	1 Clarification of Notes and Modify Reinforcing

DAVID K. FUJIWARA LICENSED PROFESSIONAL ENGINEER NO. 8104-S HAWAII, U.S.A.

THIS WORK WAS PREPARED BY ME OR UNDER MY SUPERVISION.

SIGNATURE EXPIRATION DATE OF THE LICENSE 4-30-06

STATE OF HAWAII
DEPARTMENT OF TRANSPORTATION
HIGHWAYS DIVISION

DRAIN CULVERT "R1"
SECTIONS AND DETAIL AT DI 24

North-South Road
Phase 1A
F.A.I. Proj. No. STP-8930(1)

Scale: As Noted Date: Dec. 22, 2004

SHEET No. S5.8 OF 43 SHEETS

ADD. 100

ORIGINAL PLAN | SURVEY PLOTTED BY | DRAWN BY | TRACED BY | DESIGNED BY | QUANTITIES BY | CHECKED BY | DATE | NOTE BOOK No.

NS-S508.DWG
PLOT 1 = 1

C:\KS\08\01 1-05 ADD\NS-S508 ADD1.dwg, 1/17/2005 1:07:37 PM, KSF-hp3, 1:1

FED. ROAD DIST. NO.	STATE	FED. AID PROJ. NO.	FISCAL YEAR	SHEET NO.	TOTAL SHEETS
HAWAII	HAW.	STP-8930(1)	2005	ADD. 101	144

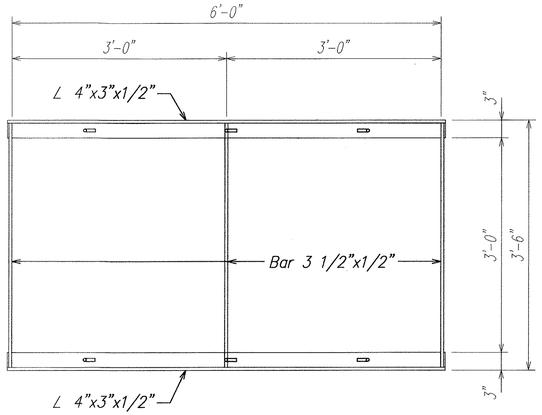

PLAN

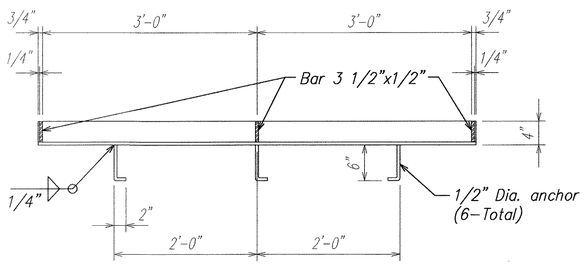

SECTION

DRAIN INLET FRAME AT DI 17, 24, 26, 34, 38 AND 43 (2 / S5.9 | S5.9)

SCALE: 1 = 1'-0"

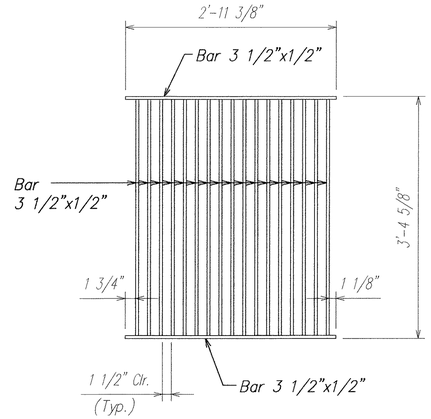

TYPE 61616 GRATE

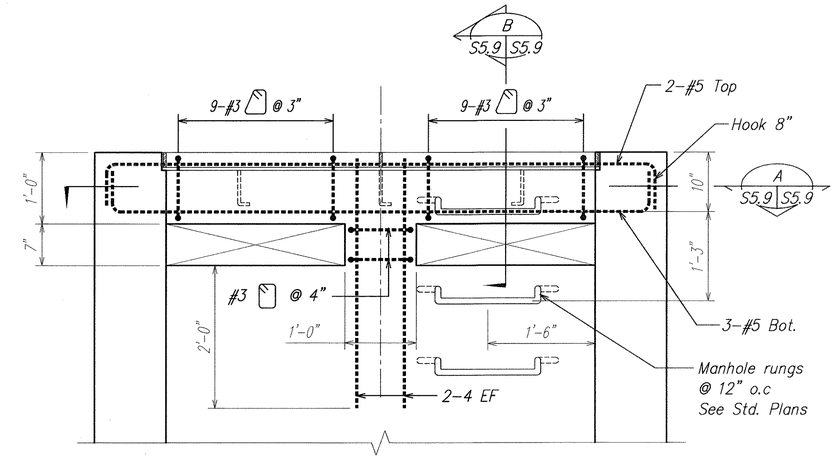

TYPICAL INLET AT DI 17, 24, 26, 34, 38 AND 43 (1 / S1.2, S5.1, S5.3, S5.4, S5.8 | S5.9)

SCALE: 1" = 1'-0"

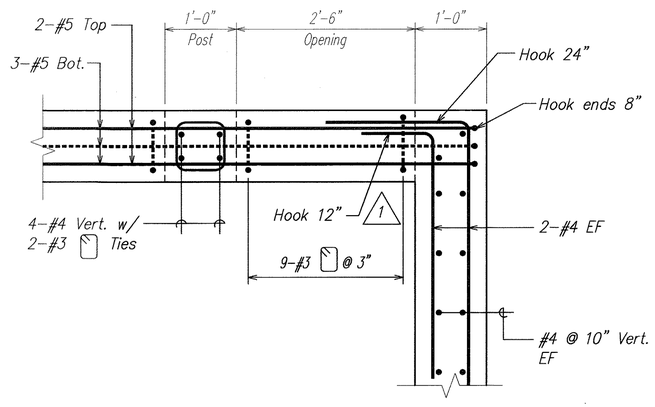

SECTION (A / S5.9 | S5.9)

SCALE: 1" = 1'-0"

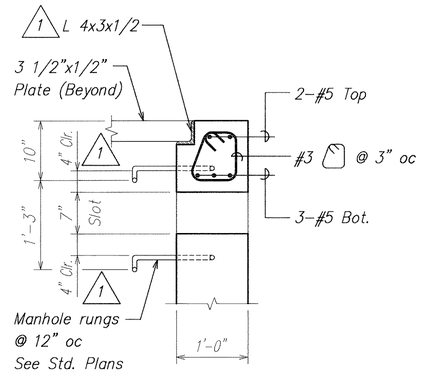

DETAIL (B / S5.8, S5.9 | S5.9)

SCALE: 1" = 1'-0"

DATE	REVISION
1/18/05	1 Clarification of Notes

DAVID K. FUJIWARA
LICENSED PROFESSIONAL ENGINEER
NO. 8104-S
HAWAII, U.S.A.

THIS WORK WAS PREPARED BY ME OR UNDER MY SUPERVISION.

SIGNATURE — EXPIRATION DATE OF THE LICENSE 4-30-06

STATE OF HAWAII
DEPARTMENT OF TRANSPORTATION
HIGHWAYS DIVISION

DRAIN INLET FRAME AT
DI 17, 24, 26, 34, 38 AND 43

North-South Road
Phase 1A
F.A.I. Proj. No. STP-8930(1)

Scale: As Noted — Date: Dec. 22, 2004

SHEET No. S5.9 OF 43 SHEETS

ADD. 101

ORIGINAL PLAN	SURVEY PLOTTED BY	DATE
	DRAWN BY	
	TRACED BY	
NOTE BOOK	DESIGNED BY	
	QUANTITIES BY	
No.	CHECKED BY	

NS-S509.DWG
PLOT 1 = 1

C:\ss-09\01-1-05 ADD\NS-S509 ADD.dwg, 1/7/2005 1:06:12 PM, KSFwc.pc3, 1:1

FED. ROAD DIST. NO.	STATE	FED. AID PROJ. NO.	FISCAL YEAR	SHEET NO.	TOTAL SHEETS
HAWAII	HAW.	STP-8930(1)	2005	ADD. 102	144

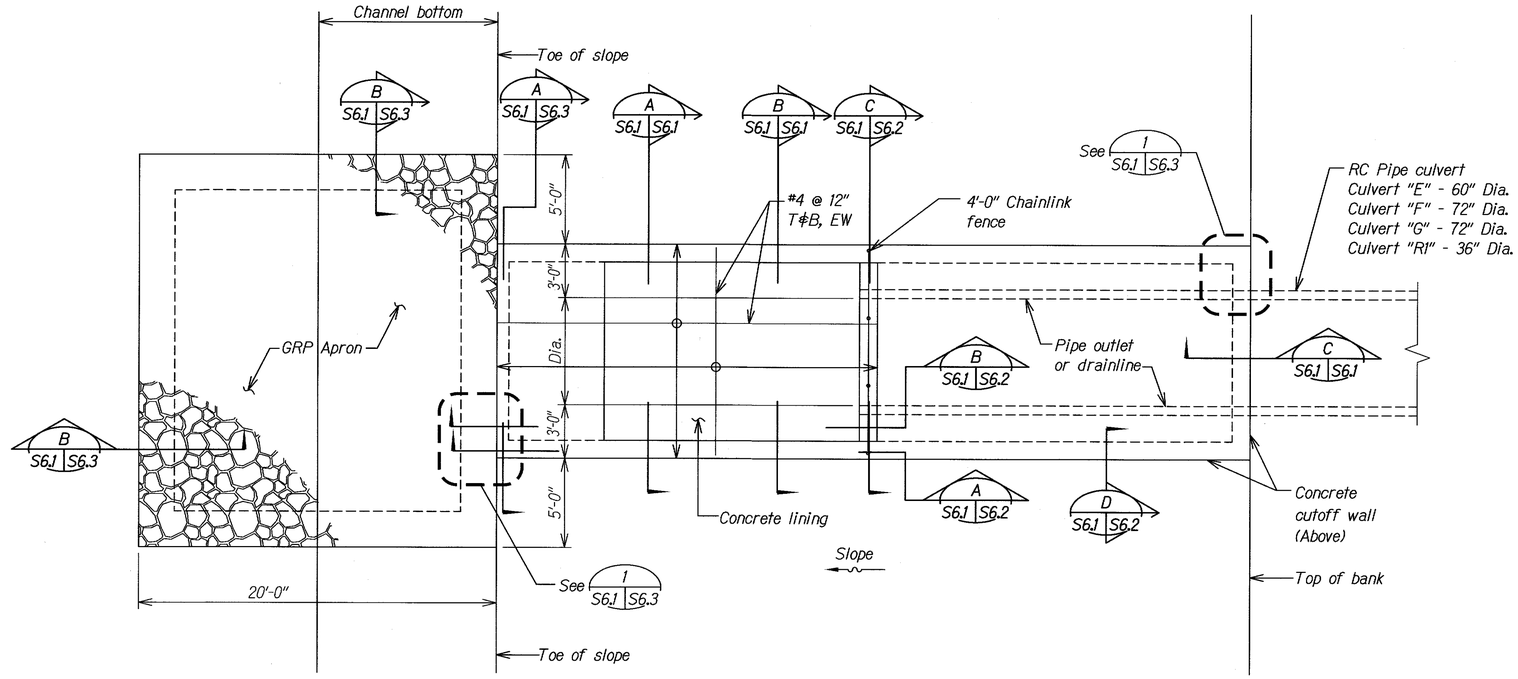

DRAIN CULVERT "E", "F", "G" AND "R-1" LAYOUT PLAN (1)

SCALE: 1/4" = 1'-0"

S4.1, S4.2, S4.3, S4.4 | S6.1

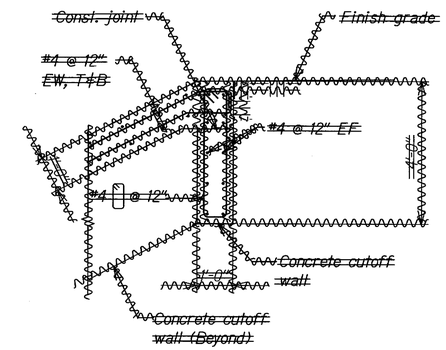

~~SECTION C~~

~~SCALE: 1/2" = 1'-0"~~ ~~S6.1 S6.1~~

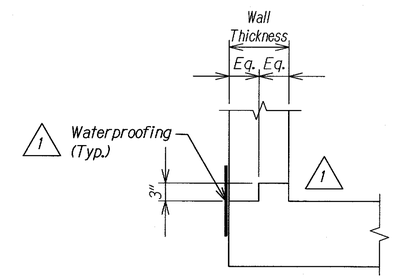

TYPICAL KEY DETAIL (D)

SCALE: 1" = 1'-0"

S6.1 | S6.1

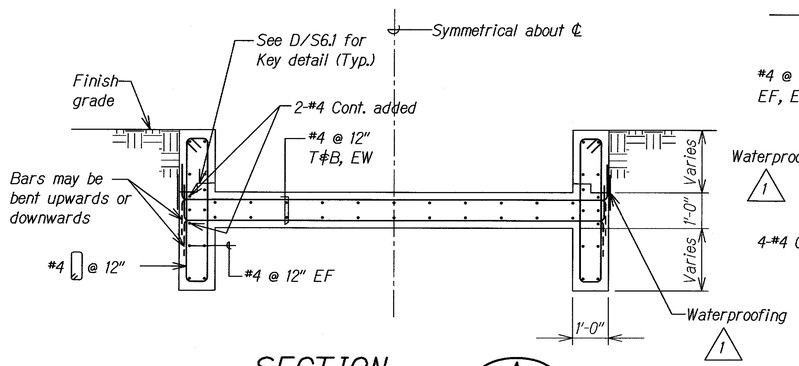

SECTION (A)

SCALE: 1/2" = 1'-0"

S6.1, S6.2 | S6.1

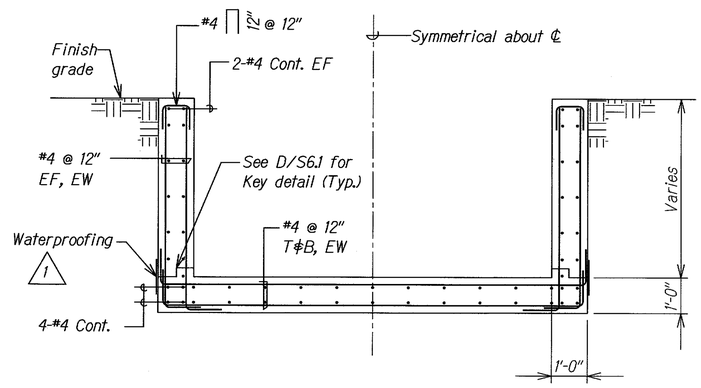

SECTION (B)

SCALE: 1/2" = 1'-0"

S6.1, S6.2 | S6.1

LEGEND FOR AS-BUILT POSTINGS	
~~	Squiggly line for as-built deletion
~~100.00~~	Double line for as-built deletion
Roadway	Text for as-built posting

DATE	REVISION
–	2 As Built – Field Order 8
1/18/05	1 Clarification of Notes

DAVID K. FUJIMARA LICENSED PROFESSIONAL ENGINEER NO. 8104-S HAWAII, U.S.A.

THIS WORK WAS PREPARED BY ME OR UNDER MY SUPERVISION.

SIGNATURE — EXPIRATION DATE OF THE LICENSE 4-30-06

STATE OF HAWAII
DEPARTMENT OF TRANSPORTATION
HIGHWAYS DIVISION

DRAIN CULVERT "E", "F", "G" AND "R-1" OUTLET LAYOUT PLAN AND SECTIONS

North-South Road
Phase 1A
F.A.I. Proj. No. STP-8930(1)

Scale: As Noted — Date: Dec. 22, 2004

SHEET No. S6.1 OF 43 SHEETS

ORIGINAL PLAN — SURVEY PLOTTED BY / DRAWN BY / TRACED BY / DESIGNED BY / QUANTITIES BY / CHECKED BY — DATE — NOTE BOOK No.

"AS-BUILT"

ADD. 102

FED. ROAD DIST. NO.	STATE	FED. AID PROJ. NO.	FISCAL YEAR	SHEET NO.	TOTAL SHEETS
HAWAII	HAW.	STP-8930(1)	2005	ADD. 103	144

LEGEND FOR AS-BUILT POSTINGS

∿∿∿	Squiggly line for as-built deletion
~~100.00~~	Double line for as-built deletion
Roadway	Text for as-built posting

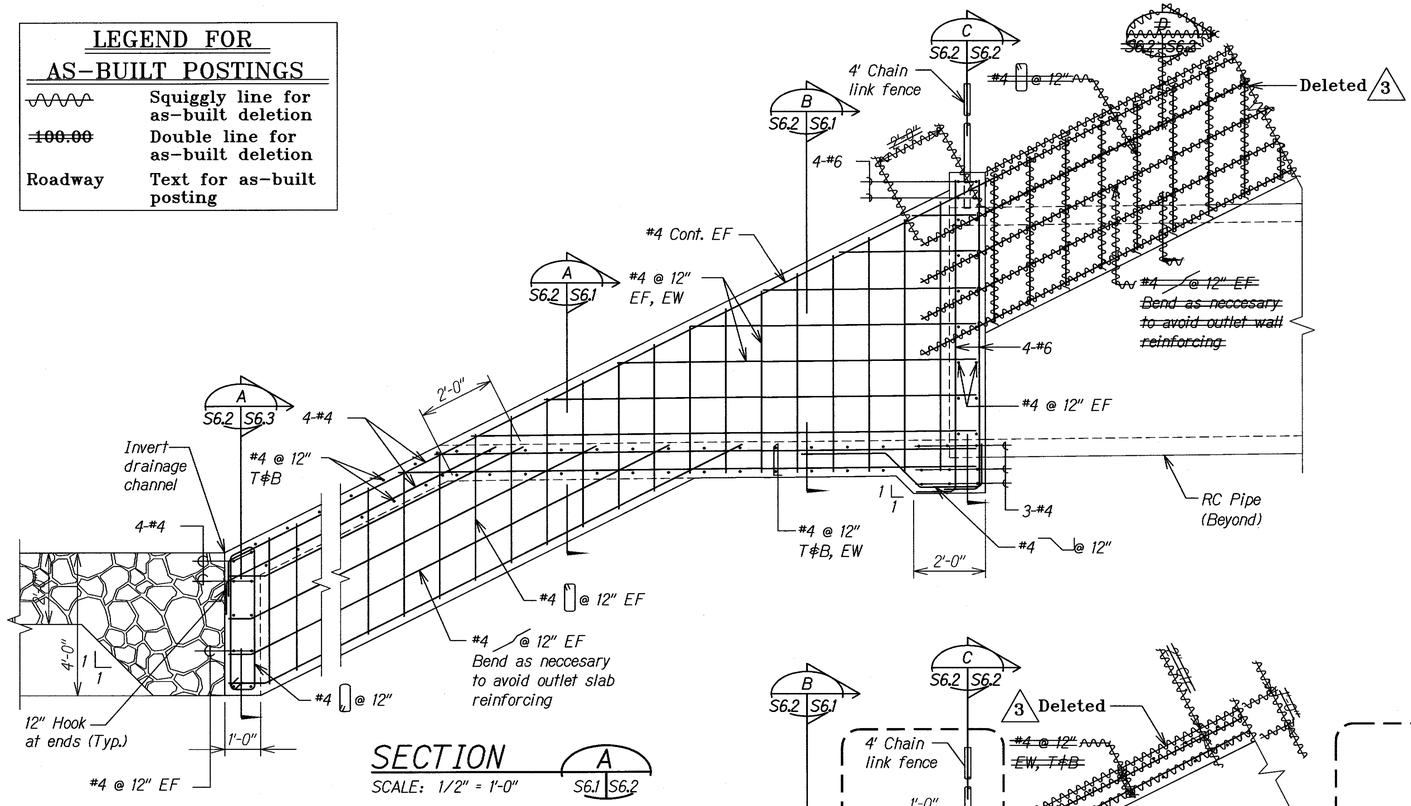

SECTION A
SCALE: 1/2" = 1'-0"
S6.1 S6.2

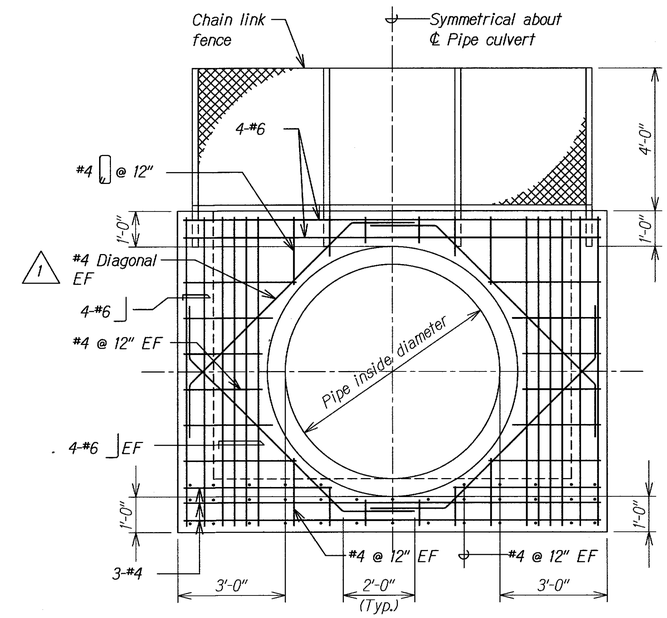

SECTION C
SCALE: 1/2" = 1'-0"
S6.1, S6.2 S6.2

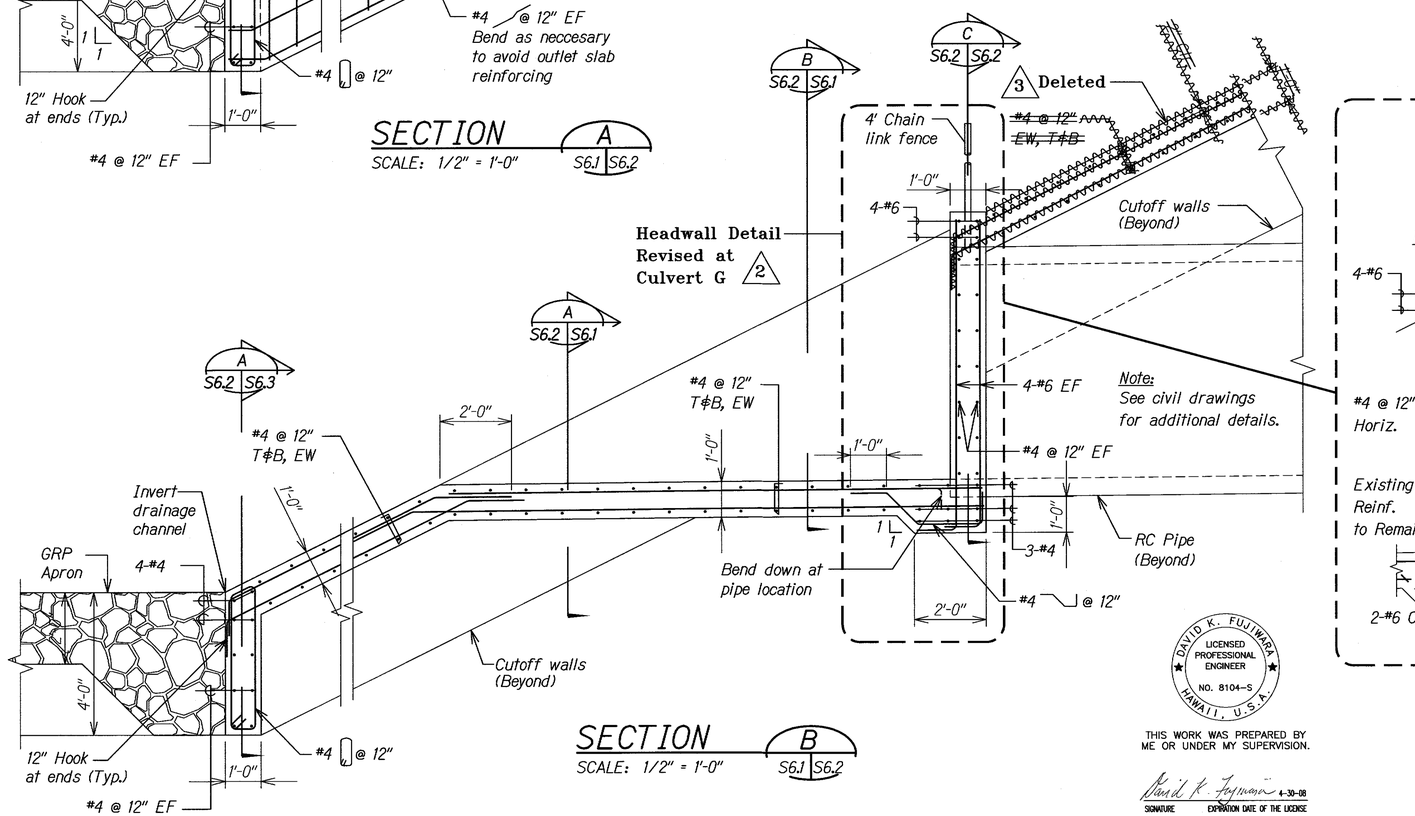

SECTION B
SCALE: 1/2" = 1'-0"
S6.1 S6.2

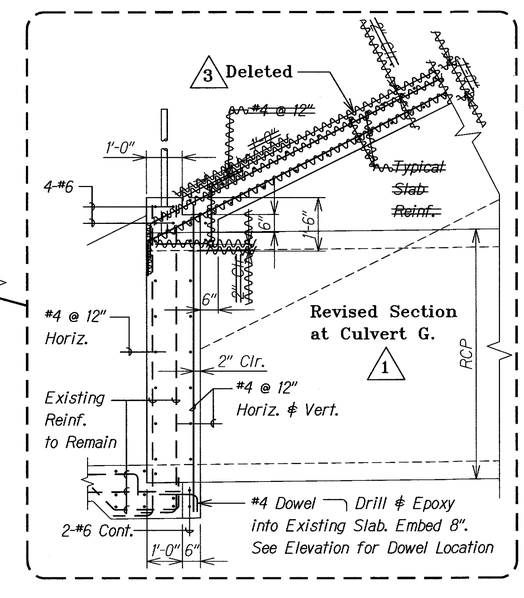

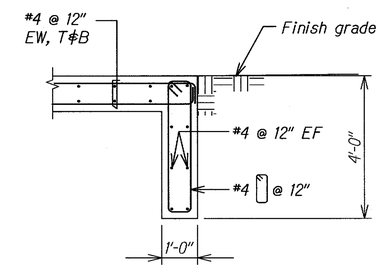

SECTION D
SCALE: 1/2" = 1'-0"
S6.1, S6.2 S6.2

DAVID K. FUJIWARA LICENSED PROFESSIONAL ENGINEER NO. 8104-S HAWAII, U.S.A.

THIS WORK WAS PREPARED BY ME OR UNDER MY SUPERVISION.

SIGNATURE — EXPIRATION DATE OF THE LICENSE 4-30-08

DATE	REVISION
–	3 As Built – Field Order 8
–	2 As Built – RFI 35
1/18/05	1 Clarification of Notes

STATE OF HAWAII
DEPARTMENT OF TRANSPORTATION
HIGHWAYS DIVISION

DRAIN CULVERT "E", "F", "G" AND "R-1" OUTLET SECTIONS

North-South Road
Phase 1A
F.A.I. Proj. No. STP-8930(1)

Scale: As Noted — Date: Dec. 22, 2004

SHEET No. S6.2 OF 43 SHEETS

ORIGINAL PLAN — SURVEY PLOTTED BY, DRAWN BY, TRACED BY, DESIGNED BY, QUANTITIES BY, CHECKED BY, NOTE BOOK No., DATE

"AS-BUILT"

ADD. 103

FED. ROAD DIST. NO.	STATE	FED. AID PROJ. NO.	FISCAL YEAR	SHEET NO.	TOTAL SHEETS
HAWAII	HAW.	STP-8930(1)	2005	ADD. 104	144

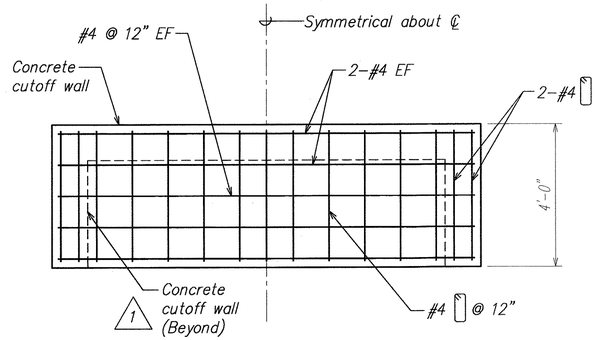

SECTION A
SCALE: 1/2" = 1'-0" S6.1, S6.2 S6.3

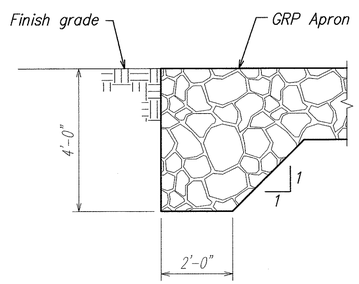

SECTION B
SCALE: 1/2" = 1'-0" S6.1 S6.3

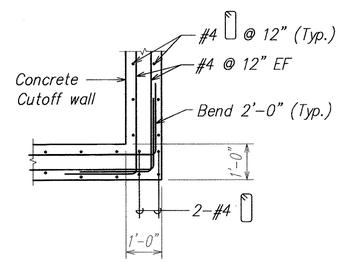

TYPICAL CORNER DETAIL 1
SCALE: 1/2" = 1'-0" S6.1 S6.3

ORIGINAL PLAN	SURVEY PLOTTED BY	DATE
	DRAWN BY	
	TRACED BY	
NOTE BOOK	DESIGNED BY	
	QUANTITIES BY	
No.	CHECKED BY	

DATE	REVISION
1/18/05	1 Clarification of Notes

DAVID K. FUJIWARA
LICENSED PROFESSIONAL ENGINEER
NO. 8104-S
HAWAII, U.S.A.

THIS WORK WAS PREPARED BY ME OR UNDER MY SUPERVISION.

SIGNATURE — EXPIRATION DATE OF THE LICENSE 4-30-06

STATE OF HAWAII
DEPARTMENT OF TRANSPORTATION
HIGHWAYS DIVISION

TYPICAL GRP APRON SECTIONS AND DETAIL

North-South Road
Phase 1A
F.A.I. Proj. No. STP-8930(1)

Scale: As Noted — Date: Dec. 22, 2004

SHEET No. S6.3 OF 43 SHEETS

ADD. 104

NS-603.DWG
PLOT 1 = 1

C:\AJ\02\01-11-05 ADD1\NS-5603 ADD1.dwg, 1/17/2005 1:09:39 PM, KSF.pc3, 1:1

FED. ROAD DIST. NO.	STATE	FED. AID PROJ. NO.	FISCAL YEAR	SHEET NO.	TOTAL SHEETS
HAWAII	HAW.	STP-8930(1)	2005	105	144

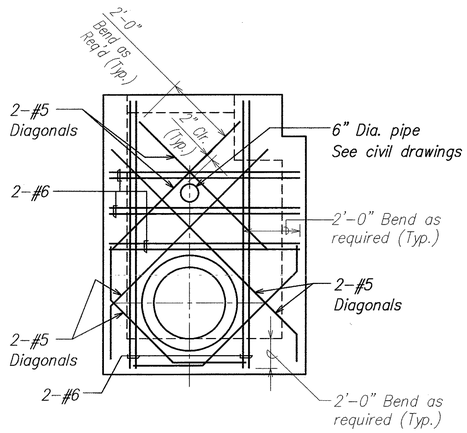

ADDED REINFORCING AT PIPE OPENING (A)

SCALE: 1/2" = 1'-0"

S6.4 | S6.4

Note:
For additional details see Standard Plans.

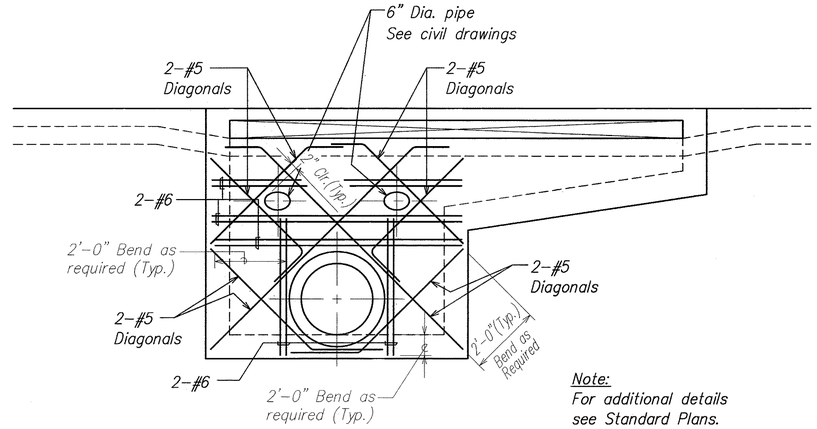

Note:
For additional details see Standard Plans.

ADDED REINFORCING AT PIPE OPENINGS (B)

SCALE: 1/2" = 1'-0"

S6.4 | S6.4

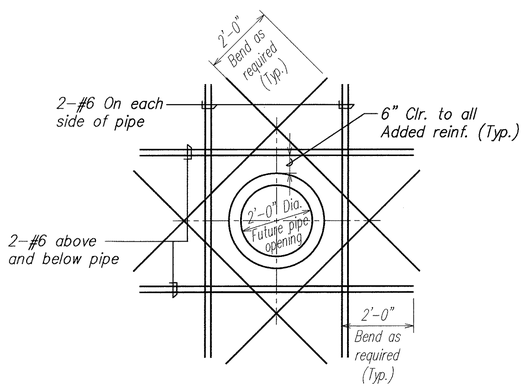

ADDED REINFORCING FUTURE 24" PIPE OPENING (C)

SCALE: 1/2" = 1'-0"

S6.4 | S6.4

ORIGINAL PLAN		DATE
	SURVEY PLOTTED BY	
	DRAWN BY	
	TRACED BY	
NOTE BOOK	DESIGNED BY	
	QUANTITIES BY	
No.	CHECKED BY	

DAVID K. FUJIWARA
LICENSED PROFESSIONAL ENGINEER
NO. 8104-S
HAWAII, U.S.A.

THIS WORK WAS PREPARED BY ME OR UNDER MY SUPERVISION.

SIGNATURE — EXPIRATION DATE OF THE LICENSE 4-30-05

STATE OF HAWAII
DEPARTMENT OF TRANSPORTATION
HIGHWAYS DIVISION

TYPICAL ADDED REINFORCING AT PIPE OPENING SECTIONS

North-South Road
Phase 1A
F.A.I. Proj. No. STP-8930(1)

Scale: As Noted — Date: Dec. 22, 2004

SHEET No. S6.4 OF 43 SHEETS

NS-604.DWG
PLOT 1 = 1

FED. ROAD DIST. NO.	STATE	FED. AID PROJ. NO.	FISCAL YEAR	SHEET NO.	TOTAL SHEETS
HAWAII	HAW.	STP-8930(1)	2005	ADD. 106	144

LEGEND:

- Structure excavation pay limits
- Aggregate subbase

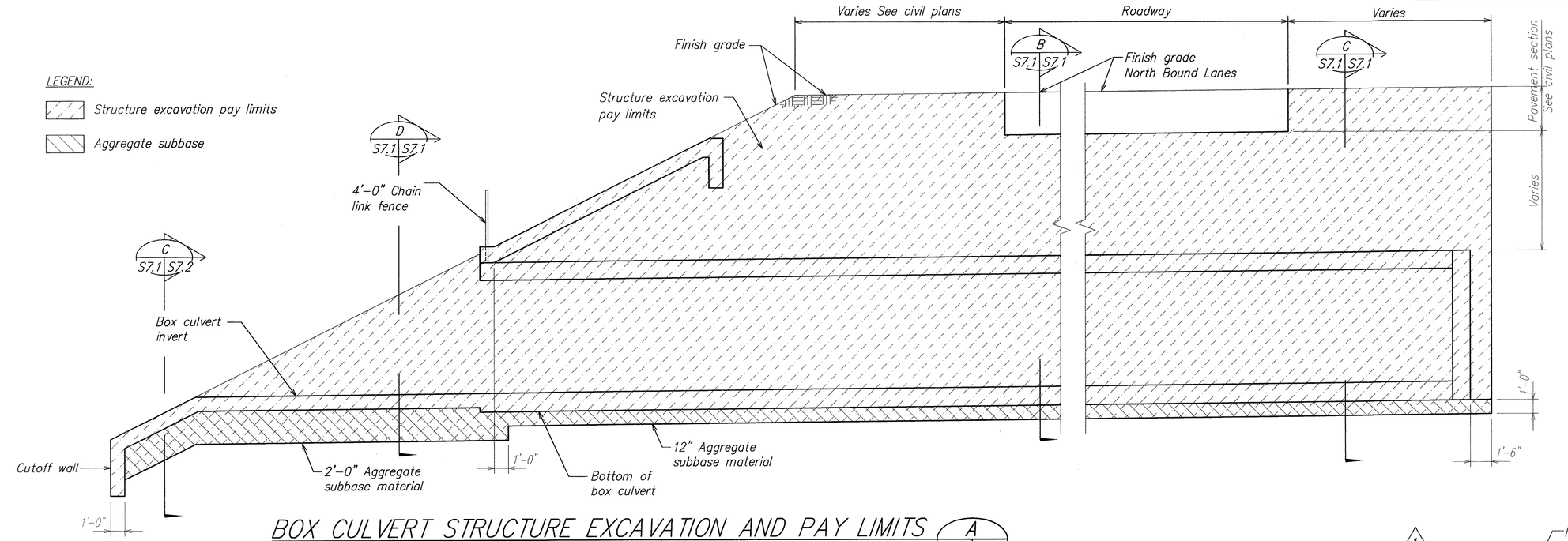

BOX CULVERT STRUCTURE EXCAVATION AND PAY LIMITS (A S7.1 S7.1)

SCALE: 1/4" = 1'-0"

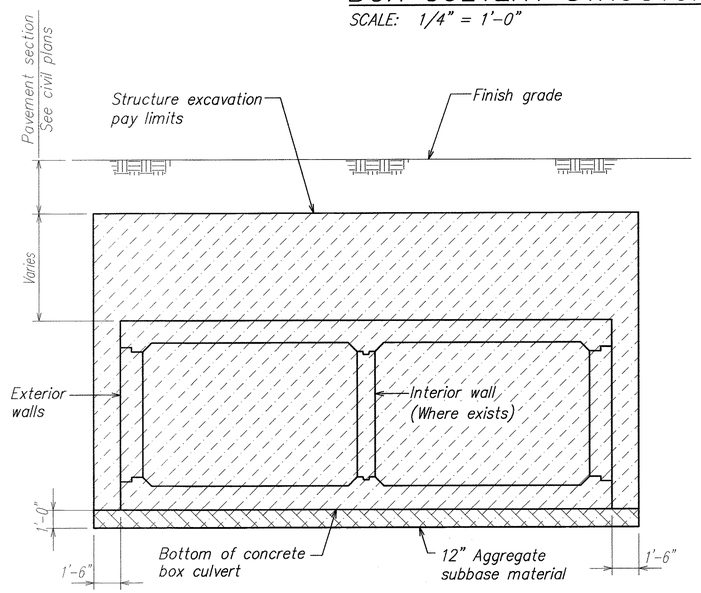

BOX CULVERT STRUCTURE EXCAVATION AND PAY LIMITS (B S7.1 S7.1)

SCALE: 1/4" = 1'-0"

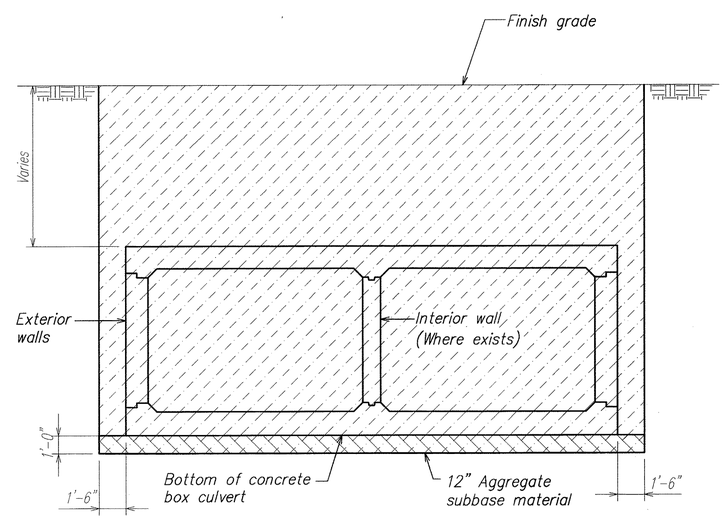

BOX CULVERT STRUCTURE EXCAVATION AND PAY LIMITS (C S7.1 S7.1)

SCALE: 1/4" = 1'-0"

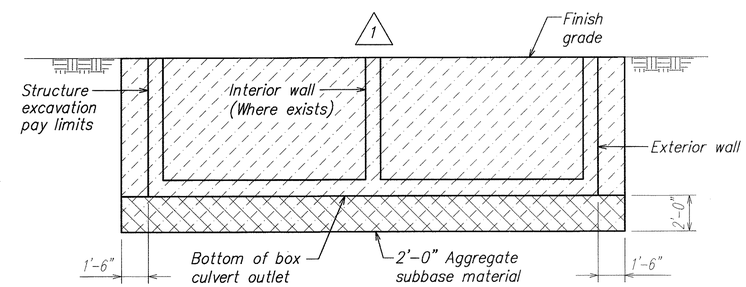

BOX CULVERT OULET STRUCTURE EXCAVATION AND PAY LIMITS (D S7.1 S7.1)

SCALE: 1/4" = 1'-0"

DAVID K. FUJIWARA LICENSED PROFESSIONAL ENGINEER NO. 8104-S HAWAII, U.S.A.

THIS WORK WAS PREPARED BY ME OR UNDER MY SUPERVISION.

David K. Fujiwara 4-30-06
SIGNATURE EXPIRATION DATE OF THE LICENSE

DATE	REVISION
1/18/05	1 Clarified Detail

STATE OF HAWAII
DEPARTMENT OF TRANSPORTATION
HIGHWAYS DIVISION

BOX CULVERT OUTLET EXCAVATION AND PAY LIMITS

North-South Road
Phase 1A
F.A.I. Proj. No. STP-8930(1)

Scale: As Noted Date: Dec. 22, 2004

SHEET No. S7.1 OF 43 SHEETS

ADD. 106

ORIGINAL PLAN	SURVEY PLOTTED BY	DATE
	DRAWN BY	
NOTE BOOK	TRACED BY	
	DESIGNED BY	
	QUANTITIES BY	
No.	CHECKED BY	

NS-S701.DWG
PLOT 1 = 1

C:\21105\01 1-05 ADD1\NS-S701 ADD1.dwg, 1/17/2005 1:11:31 PM, KSTnc.pc3, 1:1

FED. ROAD DIST. NO.	STATE	FED. AID PROJ. NO.	FISCAL YEAR	SHEET NO.	TOTAL SHEETS
HAWAII	HAW.	STP-8930(1)	2005	ADD. 107	144

LEGEND:

Structure excavation pay limits

Aggregate subbase

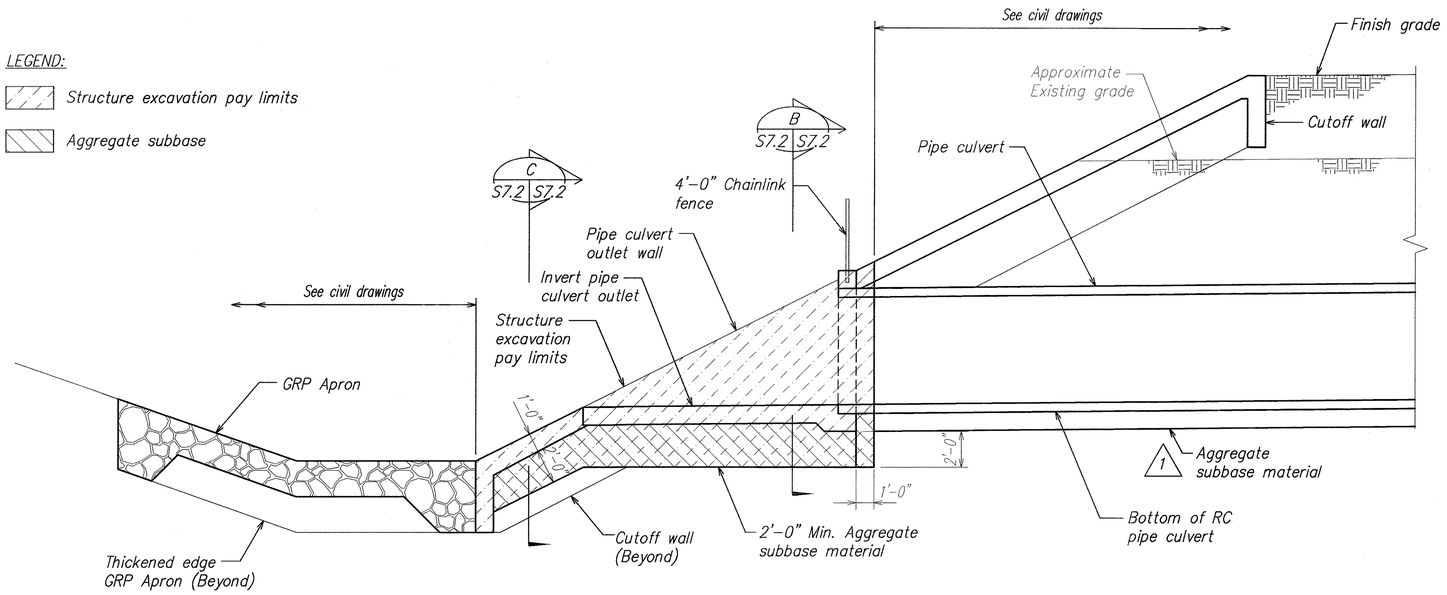

RC PIPE CULVERT OUTLET EXCAVATION AND PAY LIMITS (A / S7.2 S7.2)

SCALE: 1/4" = 1'-0"

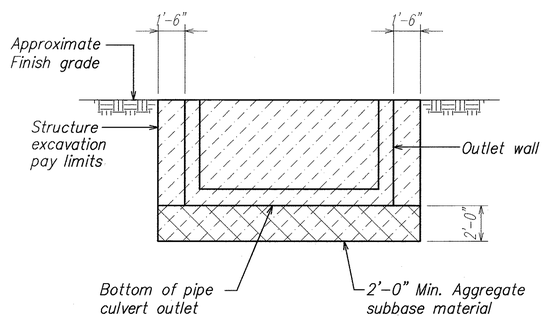

RC PIPE CULVERT OUTLET EXCAVATION AND PAY LIMITS (B / S7.2 S7.2)

SCALE: 1/4" = 1'-0"

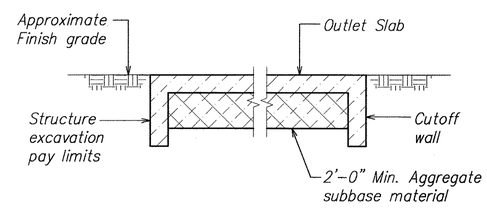

RC PIPE CULVERT OUTLET EXCAVATION AND PAY LIMITS (C / S7.1, S7.2 S7.2)

SCALE: 1/4" = 1'-0"

DAVID K. FUJIWARA LICENSED PROFESSIONAL ENGINEER NO. 8104-S HAWAII, U.S.A.

THIS WORK WAS PREPARED BY ME OR UNDER MY SUPERVISION.

SIGNATURE — EXPIRATION DATE OF THE LICENSE 4-30-06

DATE	REVISION
1/18/05	1 Clarified Detail

STATE OF HAWAII
DEPARTMENT OF TRANSPORTATION
HIGHWAYS DIVISION

RC PIPE CULVERT OUTLET EXCAVATION AND PAY LIMITS

North-South Road
Phase 1A
F.A.I. Proj. No. STP-8930(1)

Scale: As Noted — Date: Dec. 22, 2004

SHEET No. S7.2 OF 43 SHEETS

ADD. 107

ORIGINAL PLAN — SURVEY PLOTTED BY — DRAWN BY — TRACED BY — DESIGNED BY — QUANTITIES BY — CHECKED BY — DATE — NOTE BOOK No.

NS-S702.DWG
PLOT 1 = 1

C:\45105\01-17-05 A201\NS-S702 ADD'.dwg, 1/17/2005 1:12:04 PM, KSFirc.pc3, 1:1

FED. ROAD DIST. NO.	STATE	FED. AID PROJ. NO.	FISCAL YEAR	SHEET NO.	TOTAL SHEETS
HAWAII	HAW.	STP-8930(1)	2005	ADD. 108	144

Notes:
1. See electrical drawings for additional details.
2. Pipe location may be on either side of light pole center line.
3. When centerline of pipe is less than 6'-0" away from centerline of light pole and the clear distance is between the pipe and the drilled shaft is greater than 2'-0", see sections D/S8.1 & E/S8.1. (1)
4. When centerline of pipe is greater than 6'-0" away from centerline of light pole, see civil drawings for typical trench details.
5. When clear distance between shaft and pipe is less than 2'-0", use 2-shaft foundation, see sheet S8.2. (1)

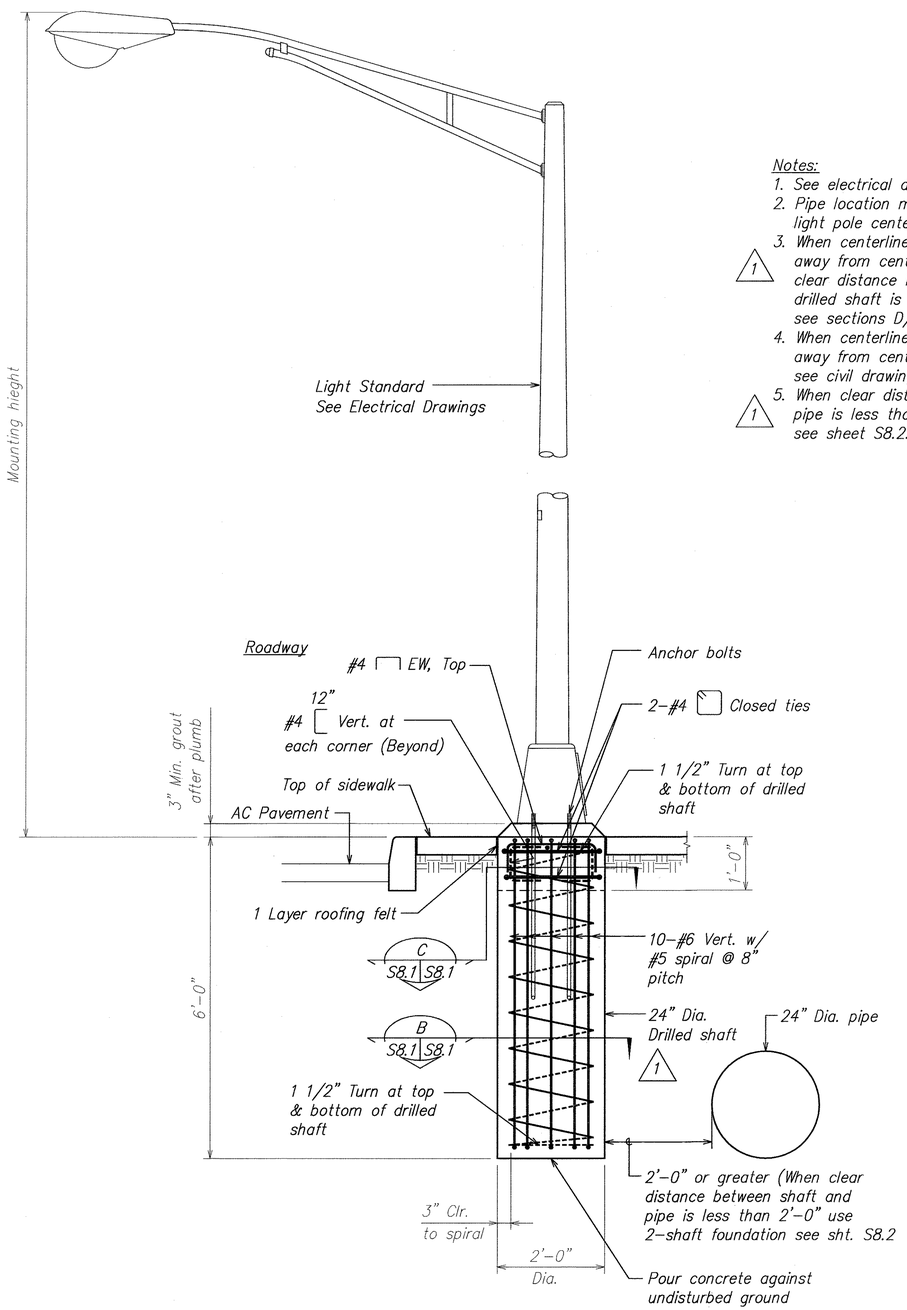

TYPICAL SINGLE SHAFT LIGHT POLE FOUNDATION (A S8.1 S8.1)
SCALE: 3/4" = 1'-0"

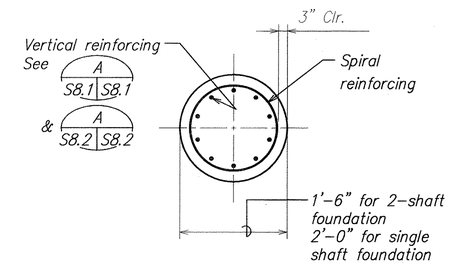

SECTION (B S8.1 S8.1)
SCALE: 3/4" = 1'-0"

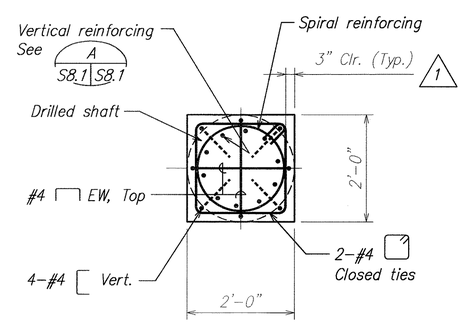

SECTION (C S8.1 S8.1)
SCALE: 3/4" = 1'-0"

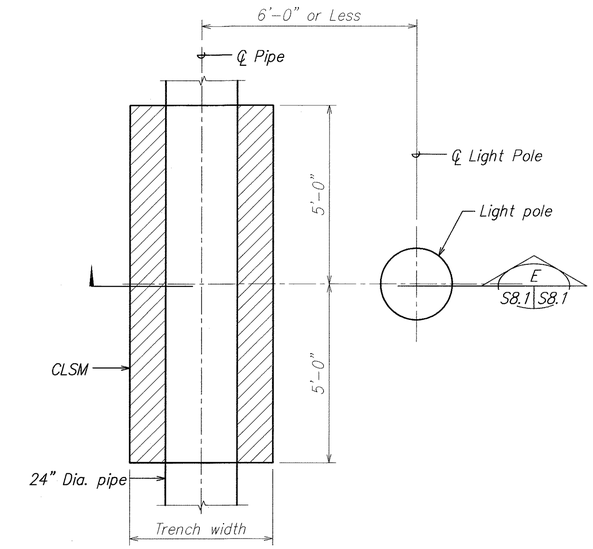

PLAN (D S8.1 S8.1)
SCALE: 1/2" = 1'-0"

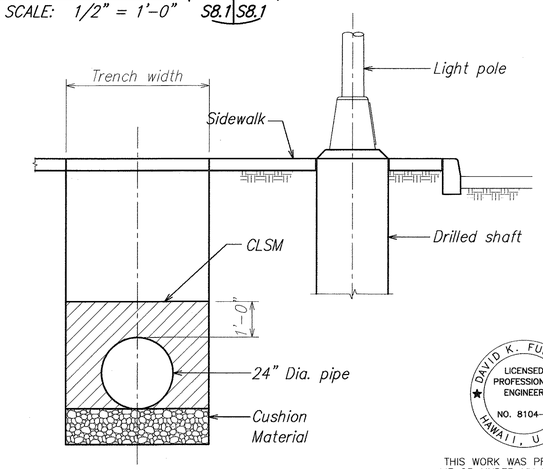

SECTION (E S8.1 S8.1)
SCALE: 1/2" = 1'-0"

DAVID K. FUJIWARA LICENSED PROFESSIONAL ENGINEER NO. 8104-S HAWAII, U.S.A.

THIS WORK WAS PREPARED BY ME OR UNDER MY SUPERVISION.

SIGNATURE — EXPIRATION DATE OF THE LICENSE 4-30-06

DATE	REVISION
1/18/05	(1) Clarification of Notes and Revised Dimension

STATE OF HAWAII
DEPARTMENT OF TRANSPORTATION
HIGHWAYS DIVISION

TYPICAL LIGHT POLE FOUNDATION
North-South Road
Phase 1A
F.A.I. Proj. No. STP-8930(1)

Scale: As Noted — Date: Dec. 22, 2004

SHEET No. S8.1 OF 43 SHEETS

ADD. 108

ORIGINAL PLAN — SURVEY PLOTTED BY / DRAWN BY / TRACED BY / DESIGNED BY / QUANTITIES BY / CHECKED BY / DATE
NOTE BOOK No.

NS-S801.DWG
PLOT 1 = 1

C:\KSFDC\01-17-05 AJD1\NS-S801 AD01.dwg, 1/17/2005 1:12:40 PM, KSFinc.pc3, 1:1

FED. ROAD DIST. NO.	STATE	FED. AID PROJ. NO.	FISCAL YEAR	SHEET NO.	TOTAL SHEETS
HAWAII	HAW.	STP-8930(1)	2005	ADD. 109	144

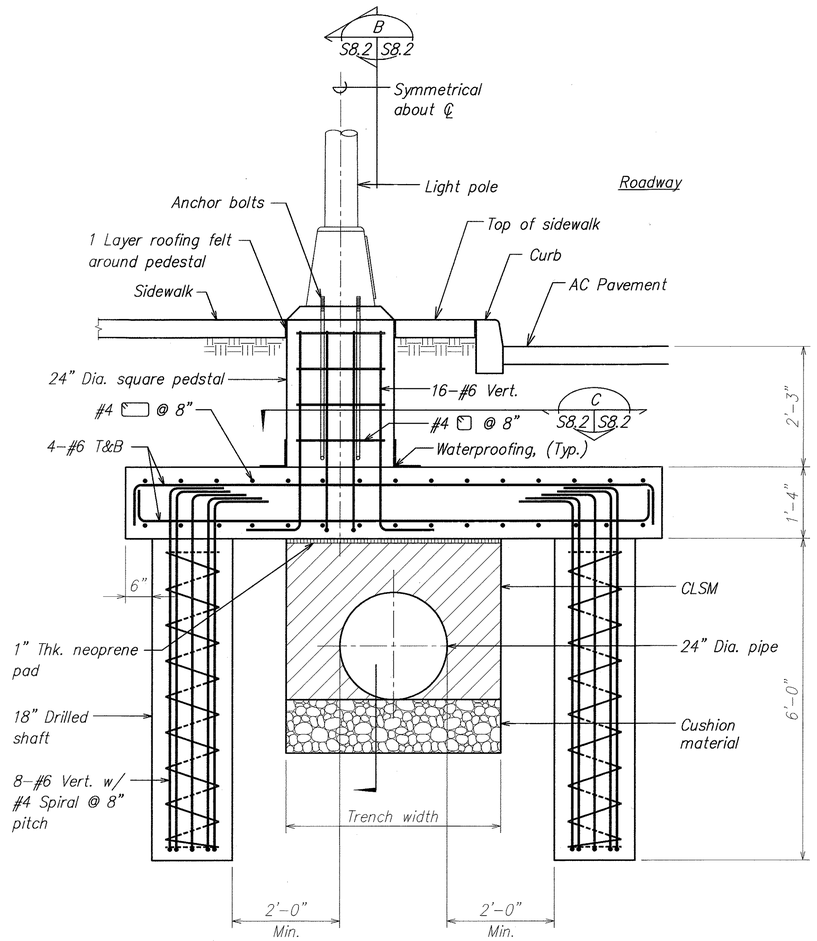

SECTION A
SCALE: 3/4" = 1'-0"

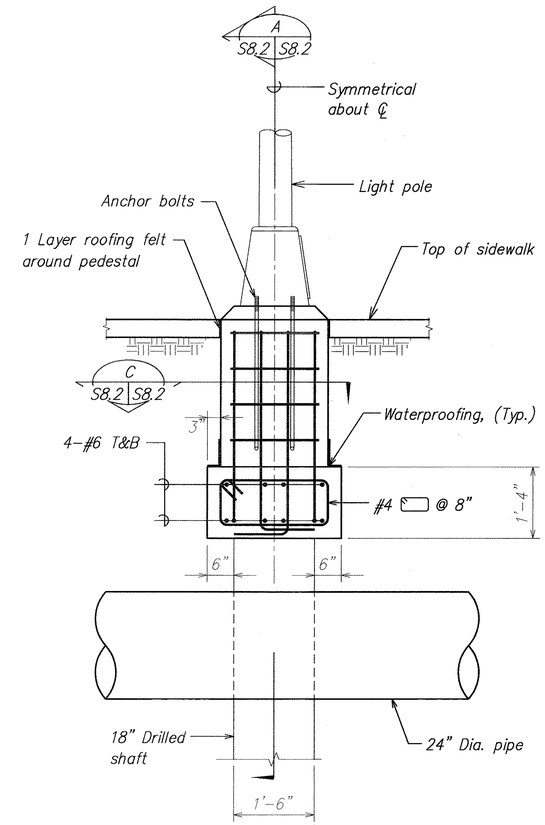

SECTION B
SCALE: 3/4" = 1'-0"

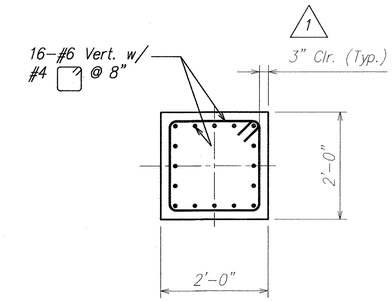

SECTION C
SCALE: 3/4" = 1'-0"

ORIGINAL PLAN	SURVEY PLOTTED BY	DATE
	DRAWN BY	
	TRACED BY	
NOTE BOOK	DESIGNED BY	
	QUANTITIES BY	
No.	CHECKED BY	

DAVID K. FUJIWARA LICENSED PROFESSIONAL ENGINEER NO. 8104-S HAWAII, U.S.A.

THIS WORK WAS PREPARED BY ME OR UNDER MY SUPERVISION.

SIGNATURE — EXPIRATION DATE OF THE LICENSE 4-30-06

DATE	REVISION
1/18/05	1 Revised Dimension

STATE OF HAWAII
DEPARTMENT OF TRANSPORTATION
HIGHWAYS DIVISION

TYPICAL LIGHT POLE FOUNDATION

North-South Road
Phase 1A
F.A.I. Proj. No. STP-8930(1)

Scale: As Noted — Date: Dec. 22, 2004

SHEET No. S8.2 OF 43 SHEETS

NS-5802.DWG
PLOT 1 = 1

ADD. 109

FED. ROAD DIST. NO.	STATE	FED. AID PROJ. NO.	FISCAL YEAR	SHEET NO.	TOTAL SHEETS
HAWAII	HAW.	STP-8930(1)	2005	110	144

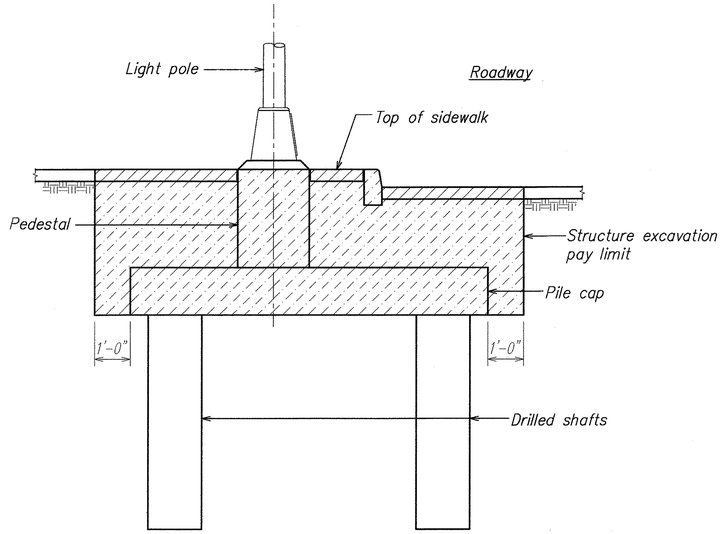

SECTION A
SCALE: 1/2" = 1'-0"
S8.3 | S8.3

Note:
Drilled shafts excavation shall be paid under Section 511.

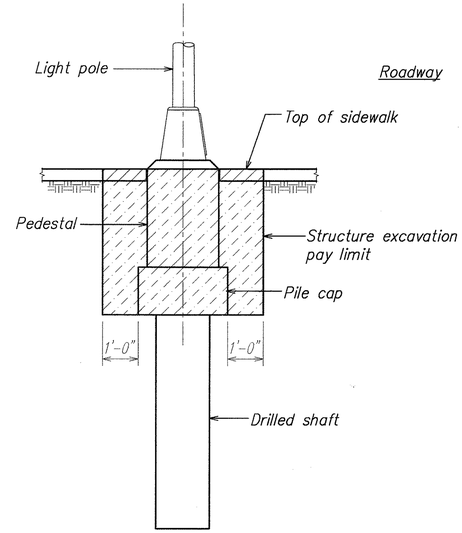

SECTION B
SCALE: 1/2" = 1'-0"
S8.3 | S8.3

ORIGINAL PLAN	SURVEY PLOTTED BY	DATE
	DRAWN BY	
	TRACED BY	
NOTE BOOK	DESIGNED BY	
	QUANTITIES BY	
No.	CHECKED BY	

DAVID K. FUJIWARA
LICENSED PROFESSIONAL ENGINEER
NO. 8104-S
HAWAII, U.S.A.

THIS WORK WAS PREPARED BY ME OR UNDER MY SUPERVISION.

SIGNATURE — EXPIRATION DATE OF THE LICENSE: 4-30-06

STATE OF HAWAII
DEPARTMENT OF TRANSPORTATION
HIGHWAYS DIVISION

LIGHT POLE STRUCTURE EXCAVATION PAY LIMITS

North-South Road
Phase 1A
F.A.I. Proj. No. STP-8930(1)

Scale: As Noted — Date: Dec. 22, 2004

SHEET No. S8.3 OF 43 SHEETS

NS-5803.DWG
PLOT 1 = 1

FED. ROAD DIST. NO.	STATE	FED. AID PROJ. NO.	FISCAL YEAR	SHEET NO.	TOTAL SHEETS
HAWAII	HAW.	STP-8930(1)	2005	C.O. 110 S-1	144

STRUCTURAL GENERAL NOTES:

1. General Specifications: Hawaii Department of Transportation, Standard Specifications for Road, Bridge, and Public Works Construction, 1994, together with Special Provisions prepared for this contract.

2. Design Specifications: AASHTO 1998 LRFD Bridge Design Specifications (Second Edition) and its subsequent interim specifications with interim supplements and modifications by the Highways Division, Department of Transportation, State of Hawaii.

3. Materials:

   (A) All concrete strengths shall be as noted below:

Item No.	Structural Parts	Compressive Strength f'c (28 Days)	W/C Ratio
(1)	All concrete unless otherwise noted	4000 PSI	0.45

   (B) The use of any calcium chloride in any concrete is prohibited.

   (C) All reinforcing steel shall be ASTM A 615 Grade 60 unless otherwise noted.

4. Reinforcement:

   (A) The covering measured from the surface of the concrete to the face of any reinforcing bars shall be as follows, except as otherwise shown:

      (1) Concrete cast against and permanently exposed to earth = 3"

      (2) All others unless otherwise noted = 2".

   (B) Reinforcing bars shall be detailed in accordance with the latest edition of the A.C.I. Detailing Manual unless otherwise noted.

   (C) Minimum clear spacing between parallel bars shall be 1 1/2 times the diameter of bars (for non bundled bars). In no case shall the clear distance between the bars be less than 1 1/2 times the maximum size of the coarse aggregate or 1 1/2".

   (D) All dimensions relating to reinforcing bars are to centers of bars unless otherwise noted.

   (E) Reinforcing bars shall be securely tied at all intersections and lap splices except where the spacing of intersections is less than one foot in each direction, in which case alternate intersections shall be tied.

5. Construction Notes:

   (A) The Contractor shall verify all dimensions and site conditions and shall report any discrepancies in writing to the Engineer before commencing work or ordering materials.

   (B) The Contractor shall be solely responsible for the protection of adjacent properties, utilities and existing and new structures from damage due to construction. Repairing any damage shall be at the Contractor's own expense, to the satisfaction of the Engineer.

   (C) The Contractor shall verify the location of all utility lines and notify the respective owners before commencing with excavation, and any temporary piling or sheeting.

   (D) Except as otherwise noted, all vertical dimensions are measured plumb.

   (E) For concrete finish see Standard Specifications and Special Provisions.

   (F) Construction joints may be relocated or additional ones added subject to the approval of the Engineer.

   (G) Unless otherwise noted, all exposed concrete edges shall be chamfered 3/4" x 3/4".

   (H) The Contractor shall refer to the existing drawings for the approximate location and size of all existing reinforcing bars prior to demolishing wall.

   (J) The Contractor shall submit shop drawings for maintenance manhole prior to start of manhole fabrication.

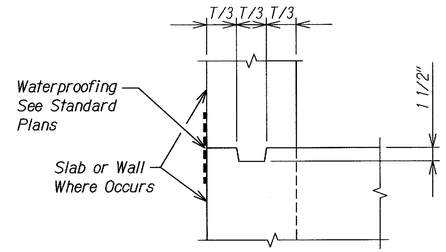

TYPICAL KEY DETAIL 1 (S9.3 | S9.1)

SCALE: 1 1/2" = 1'-0"

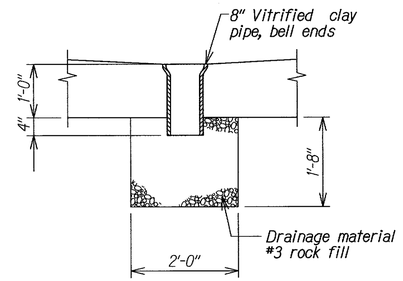

MANHOLE SUMP DETAIL 2 (S9.2 | S9.1)

SCALE: 3/4" = 1'-0"

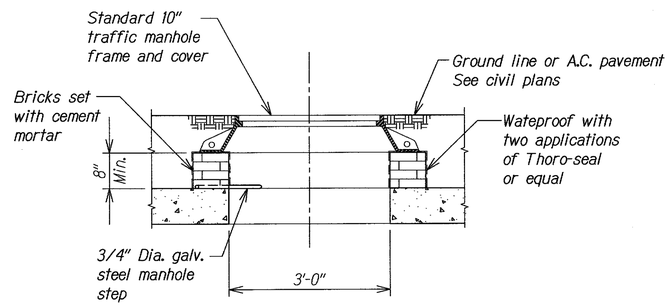

BRICK COLLAR DETAIL 3 (S9.3 | S9.1)

SCALE: 3/4" = 1'-0"

ORIGINAL PLAN	SURVEY PLOTTED BY	DATE
	DRAWN BY	
NOTE BOOK	TRACED BY	
	DESIGNED BY	
	QUANTITIES BY	
No.	CHECKED BY	

DAVID K. FUJIWARA LICENSED PROFESSIONAL ENGINEER NO. 8104-S HAWAII, U.S.A.

THIS WORK WAS PREPARED BY ME OR UNDER MY SUPERVISION.

SIGNATURE — EXPIRATION DATE OF THE LICENSE 4-30-08

DATE	REVISION
10/27/06	New Sheet

STATE OF HAWAII
DEPARTMENT OF TRANSPORTATION
HIGHWAYS DIVISION

STRUCTURAL GENERAL NOTES AND TYPICAL DETAILS

North-South Road
Phase 1A
F.A.I. Proj. No. STP-8930(1)

Scale: As Noted — Date: Dec. 22, 2004

SHEET No. S9.1 OF 43 SHEETS

FED. ROAD DIST. NO.	STATE	FED. AID PROJ. NO.	FISCAL YEAR	SHEET NO.	TOTAL SHEETS
HAWAII	HAW.	STP-8930(1)	2005	C.O. 110 S-2	144

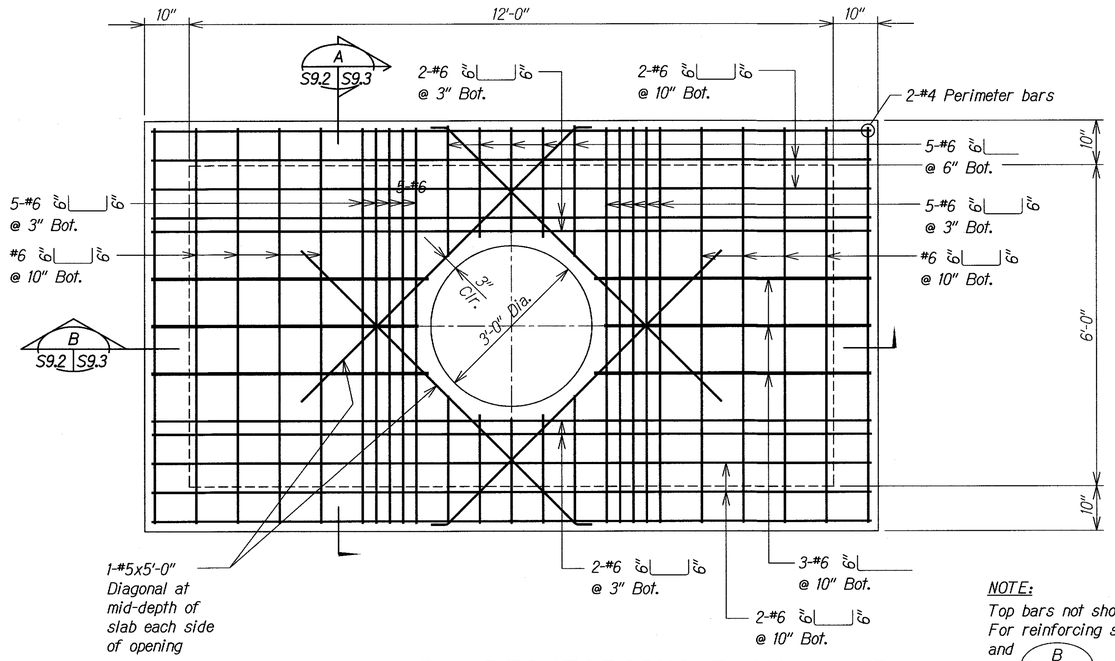

TOP SLAB - REINFORCING PLAN (A S9.2 S9.2)

SCALE: 3/4" = 1'-0"

NOTE:
Top bars not shown for clarity. For reinforcing see A S9.2 S9.3 and B S9.2 S9.3

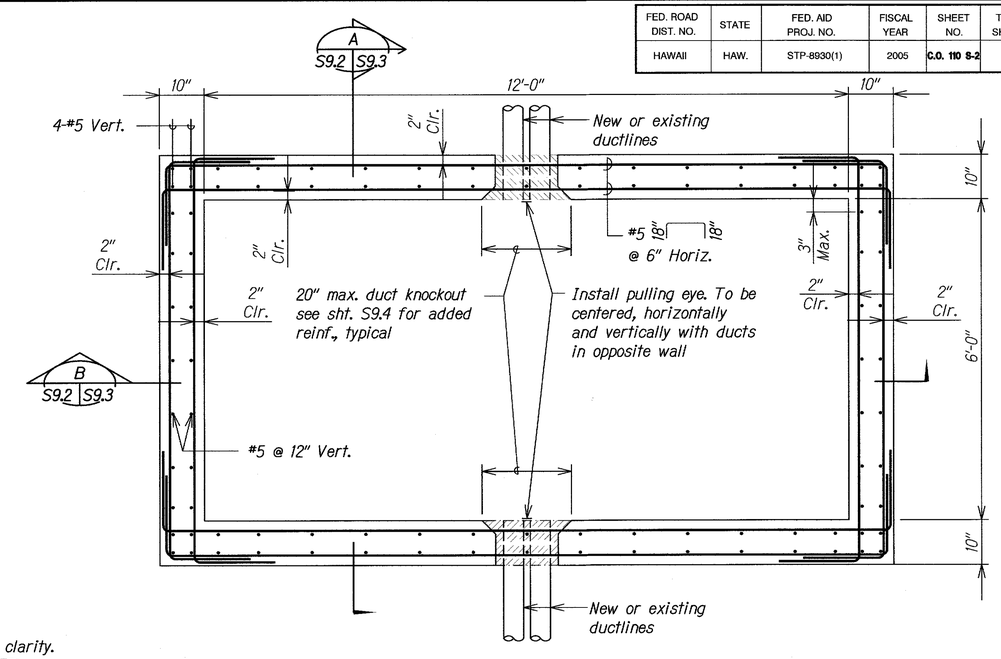

WALL - REINFORCING PLAN (B S9.3 S9.2)

SCALE: 3/4" = 1'-0"

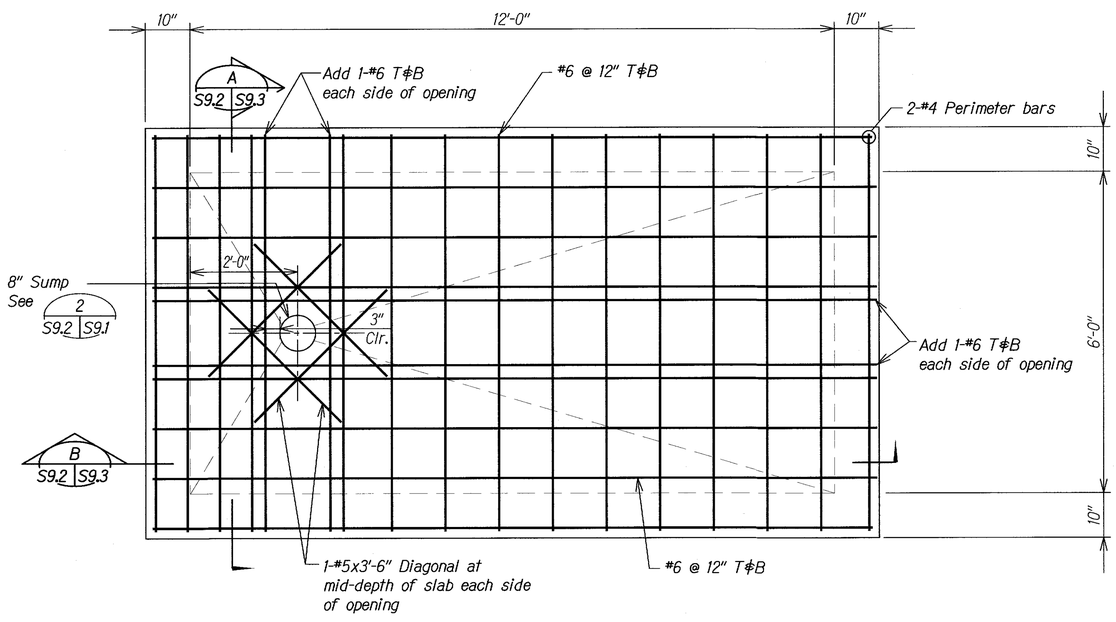

BOTTOM SLAB - REINFORCING PLAN (C S9.2 S9.2)

SCALE: 3/4" = 1'-0"

ORIGINAL PLAN	SURVEY PLOTTED BY	DATE
	DRAWN BY	
	TRACED BY	
NOTE BOOK	DESIGNED BY	
	QUANTITIES BY	
No.	CHECKED BY	

DATE	REVISION
10/27/06	New Sheet

STATE OF HAWAII
DEPARTMENT OF TRANSPORTATION
HIGHWAYS DIVISION

NEW MAINTENANCE MANHOLE
TYPICAL PLANS AND SECTIONS

North-South Road
Phase 1A
F.A.I. Proj. No. STP-8930(1)

Scale: As Noted Date: Dec. 22, 2004

DAVID K. FUJIWARA LICENSED PROFESSIONAL ENGINEER NO. 8104-S HAWAII, U.S.A.

THIS WORK WAS PREPARED BY ME OR UNDER MY SUPERVISION.

SIGNATURE EXPIRATION DATE OF THE LICENSE 4-30-08

SHEET No. S9.2 OF 43 SHEETS

C.O. 110 S-2

FED. ROAD DIST. NO.	STATE	FED. AID PROJ. NO.	FISCAL YEAR	SHEET NO.	TOTAL SHEETS
HAWAII	HAW.	STP-8930(1)	2005	C.O. 110 S-3	144

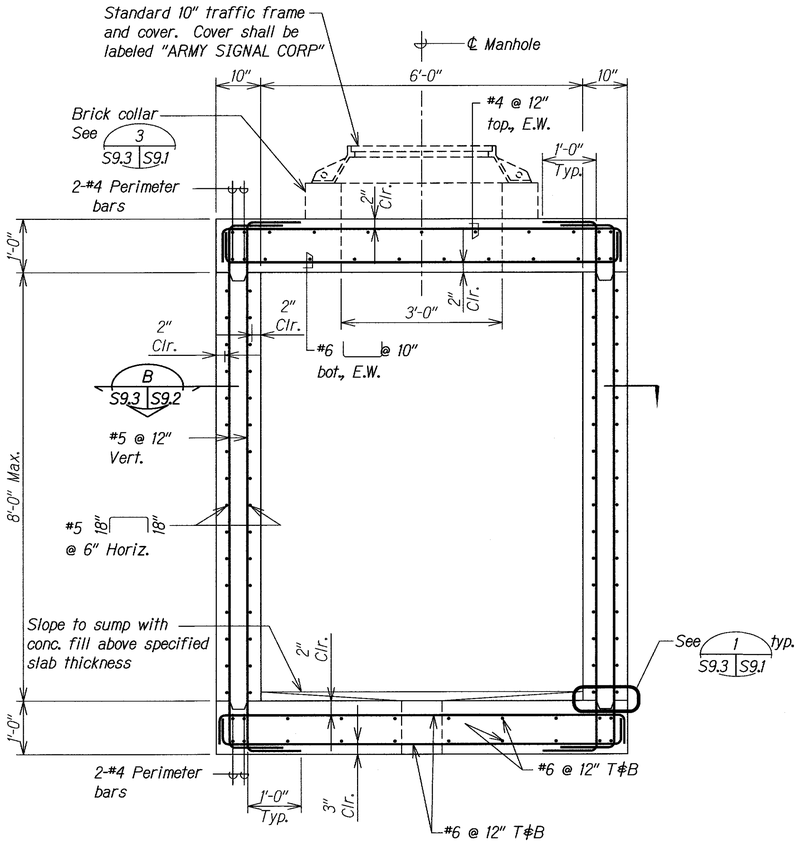

WALL - REINFORCING SECTION A

SCALE: 3/4" = 1'-0"

S9.2 S9.3

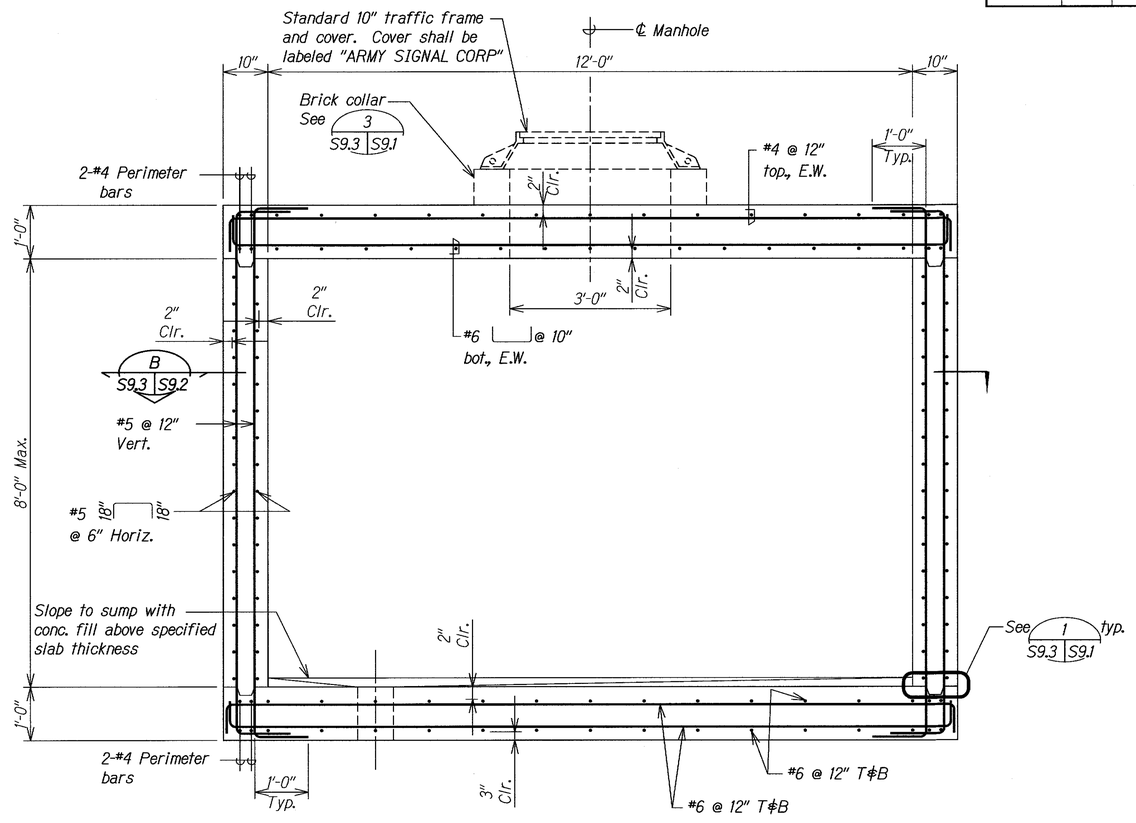

WALL - REINFORCING SECTION B

SCALE: 3/4" = 1'-0"

S9.2 S9.3

ORIGINAL PLAN	SURVEY PLOTTED BY	DATE
	DRAWN BY	"
NOTE BOOK	TRACED BY	"
	DESIGNED BY	"
	QUANTITIES BY	"
No.	CHECKED BY	"

DAVID K. FUJIWARA LICENSED PROFESSIONAL ENGINEER NO. 8104-S HAWAII, U.S.A.

THIS WORK WAS PREPARED BY ME OR UNDER MY SUPERVISION.

SIGNATURE — EXPIRATION DATE OF THE LICENSE 4-30-08

DATE	REVISION
10/27/06	New Sheet

STATE OF HAWAII
DEPARTMENT OF TRANSPORTATION
HIGHWAYS DIVISION

MAINTENANCE MANHOLE EXTENSION SECTIONS

North-South Road
Phase 1A
F.A.I. Proj. No. STP-8930(1)

Scale: As Noted — Date: Dec. 22, 2004

SHEET No. S9.3 OF 43 SHEETS

C.O. 110 S-3

FED. ROAD DIST. NO.	STATE	FED. AID PROJ. NO.	FISCAL YEAR	SHEET NO.	TOTAL SHEETS
HAWAII	HAW.	STP-8930(1)	2005	C.O. 110 S-4	144

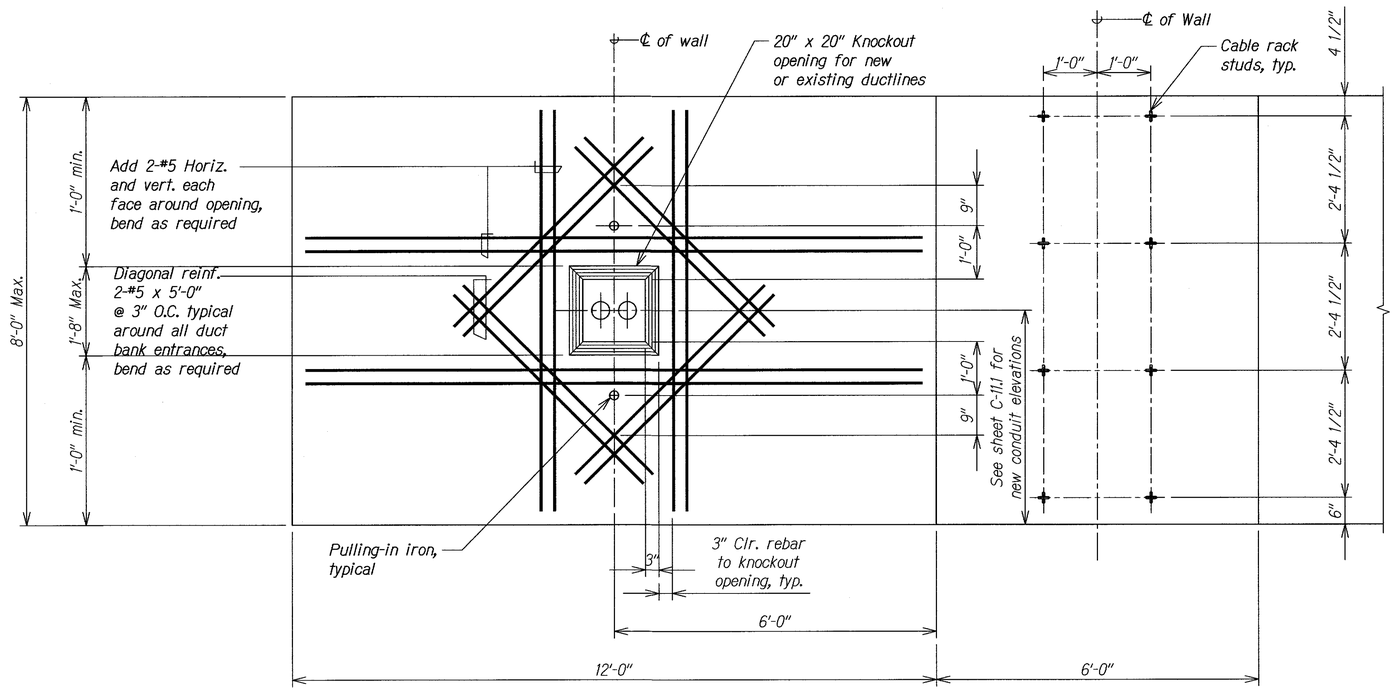

ELEVATION OF MANHOLE WALLS (OPPOSITE FACES SIMILAR)

SCALE: 3/4" = 1'-0"

ORIGINAL PLAN	SURVEY PLOTTED BY	DATE
	DRAWN BY	"
NOTE BOOK	TRACED BY	"
	DESIGNED BY	"
	QUANTITIES BY	"
No.	CHECKED BY	"

DATE	REVISION
10/27/06	New Sheet

STATE OF HAWAII
DEPARTMENT OF TRANSPORTATION
HIGHWAYS DIVISION

MAINTENANCE MANHOLE WALL ELEVATION

North-South Road
Phase 1A
F.A.I. Proj. No. STP-8930(1)

Scale: As Noted Date: Dec. 22, 2004

SHEET No. S9.4 OF 43 SHEETS

DAVID K. FUJIWARA
LICENSED PROFESSIONAL ENGINEER
NO. 8104-S
HAWAII, U.S.A.

THIS WORK WAS PREPARED BY ME OR UNDER MY SUPERVISION.

SIGNATURE — EXPIRATION DATE OF THE LICENSE 4-30-08