FED. ROAD DIST. NO.	STATE	FED. AID PROJ. NO.	FISCAL YEAR	SHEET NO.	TOTAL SHEETS
HAWAII	HAW.	HES-0300(21)	1983	7	25

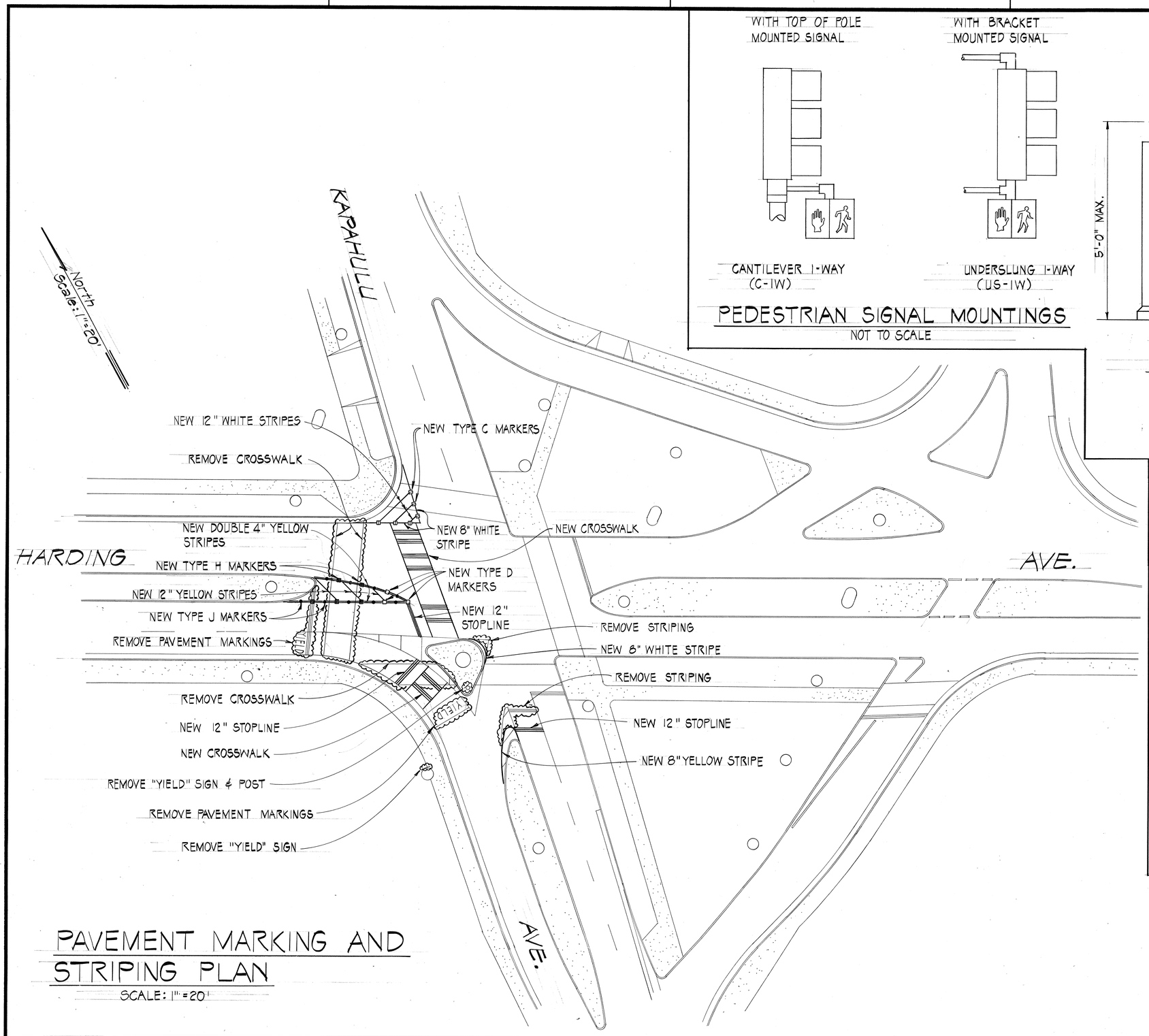

PAVEMENT MARKING AND STRIPING PLAN

SCALE: 1" = 20'

PEDESTRIAN SIGNAL MOUNTINGS

NOT TO SCALE

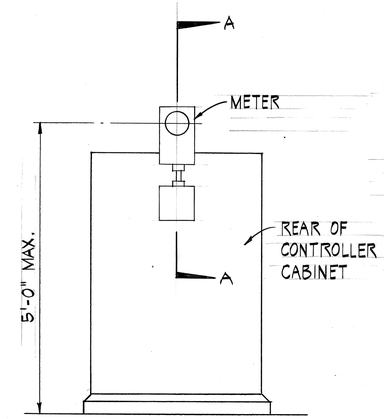

ELEVATION

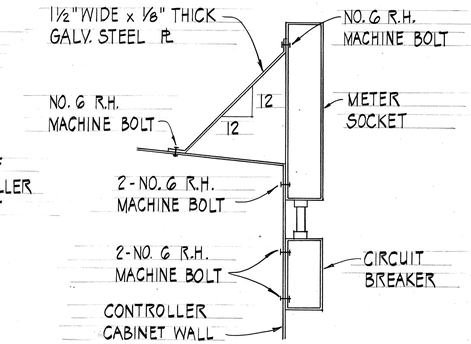

NOTE: STEEL PL., METER SOCKET AND CIRCUIT BREAKER SHALL BE PAINTED WHITE TO MATCH CABINET AFTER INSTALLATION.

SECTION A-A

DETAIL A / 7

NOT TO SCALE

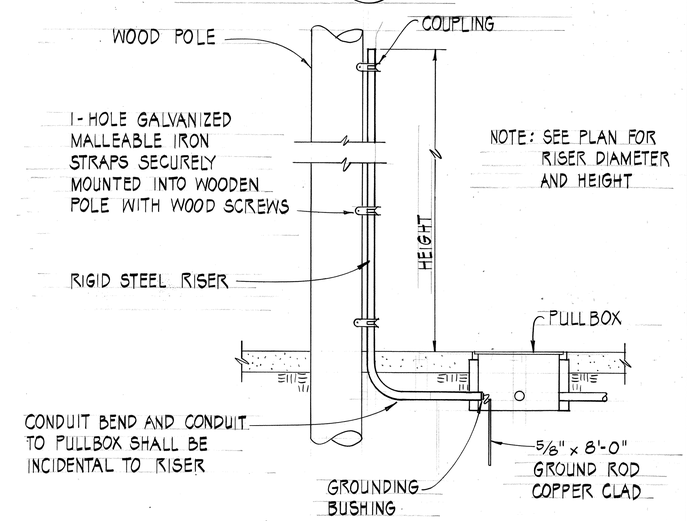

WOOD POLE RISER DETAIL

NO SCALE

ORIGINAL PLAN	SURVEY PLOTTED BY	DATE
	DRAWN BY	
	TRACED BY	
NOTE BOOK	DESIGNED BY	
	QUANTITIES BY	
No.	CHECKED BY	

PAUL T. TANIGUCHI
REGISTERED PROFESSIONAL ENGINEER
No. 864
HAWAII, U.S.A.

THIS WORK WAS PREPARED BY ME OR UNDER MY SUPERVISION.

STATE OF HAWAII
DEPARTMENT OF TRANSPORTATION
HIGHWAYS DIVISION

-PAVEMENT MARKING AND STRIPING PLAN FOR KAPAHULU AVE. & HARDING AVE.-
-MISCELLANEOUS TRAFFIC DETAILS-
MODERNIZATION OF TRAFFIC SIGNAL SYSTEMS
KING-KAPIOLANI-HARDING-KAPAHULU-WAIALAE-OLD WAIALAE
PROJECT NO. HES-0300(21)

SCALE: AS SHOWN DATE:

SHEET No. 1 OF 1 SHEETS