FED. ROAD DIST. NO.	STATE	FED. AID PROJ. NO.	FISCAL YEAR	SHEET NO.	TOTAL SHEETS
HAWAII	HAW.	CBI/1-H1-24 Unit 2	1965	30	276

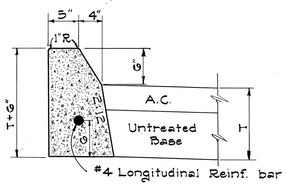

TYPE "A-1" CURB

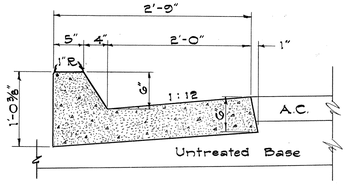

TYPE "A-2" CURB & GUTTER

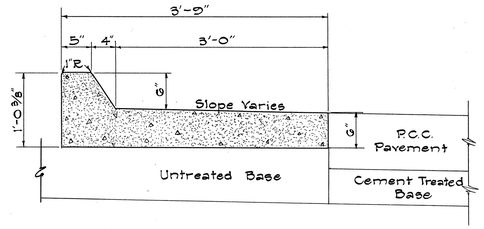

TYPE "A-3" CURB & GUTTER

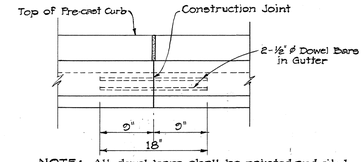

NOTE: All dowel bars shall be painted and oiled to prevent bond with concrete.

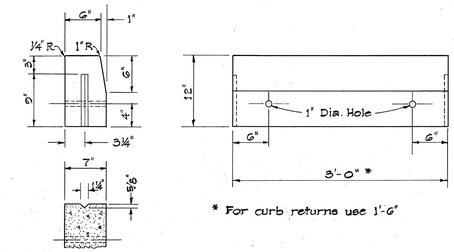

* For curb returns use 1'-6"

PRECAST CONCRETE CURB

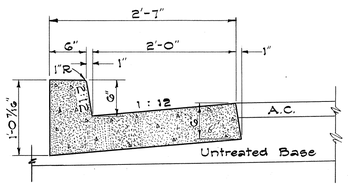

TYPE "DG" CURB & GUTTER

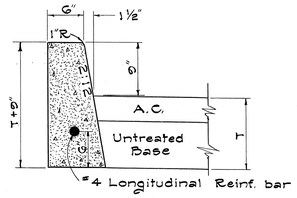

TYPE "DB" CURB

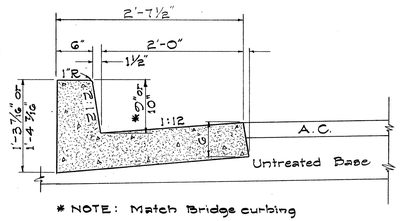

* NOTE: Match Bridge curbing

TYPE "DBG" CURB & GUTTER

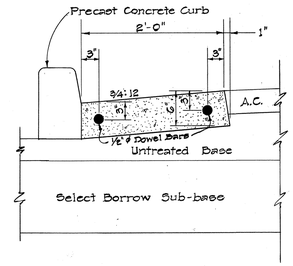

CONSTRUCTION JOINT DETAILS FOR TYPE "H" CAST-IN-PLACE GUTTER

Scale: 1" = 1'-0"

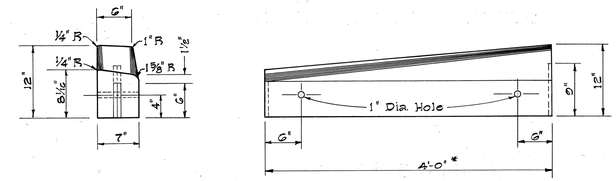

Note:
* - Reduce to 3'-0" where shown on plans.

PRECAST CONCRETE DROP CURB

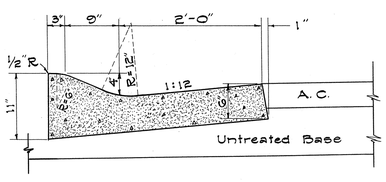

TYPE "EG" CURB & GUTTER

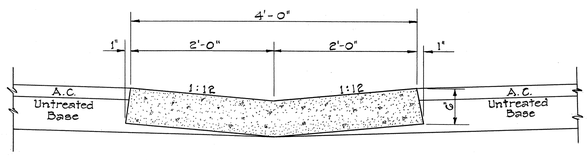

TYPE "G" GUTTER

DETAIL OF CAST-IN-PLACE CURBS, GUTTERS, AND CURBS & GUTTERS

Scale: 1" = 1'-0"

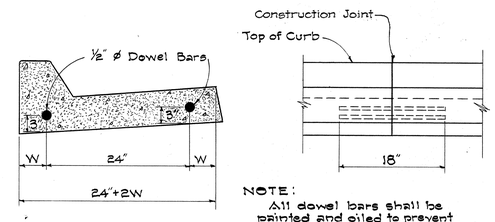

NOTE:
All dowel bars shall be painted and oiled to prevent bond with concrete.

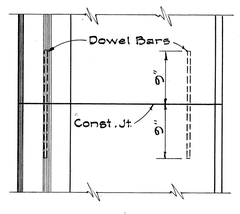

TYPICAL CONSTRUCTION JOINT DETAIL FOR CAST-IN-PLACE CONCRETE CURB & GUTTER

Scale: 1" = 1'-0"

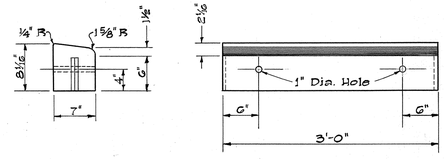

PRECAST CONCRETE DRIVEWAY CURB

PRECAST CONCRETE CURBS

Scale: 1" = 1'-0"

PAYMENT FOR CURB AND CURB & GUTTER TRANSITIONS		
TYPE OF TRANSITION		MEASURED FOR PAYMENT AS:
From	To	
C.I.P. curb or Pre-Cast Curb	C.I.P. Curb & Gutter	C.I.P. Curb & Gutter
C.I.P. Curb & Gutter	Pre-Cast Curb & C.I.P Gutter	C.I.P. Curb & Gutter
C.I.P. Curb & Gutter Type	C.I.P. Curb & Gutter Type	C.I.P. Curb & Gutter 1/2 of Transition to each type
C.I.P. Curb Type	C.I.P. Curb Type	C.I.P. Curb 1/2 of Transition to each type
Bridge Abutments	C.I.P. Curb & Gutter or Pre-Cast Curb & C.I.P. Gutter	C.I.P. Type "DBG" Curb & Gutter

NOTE: C.I.P. = Cast-in-Place

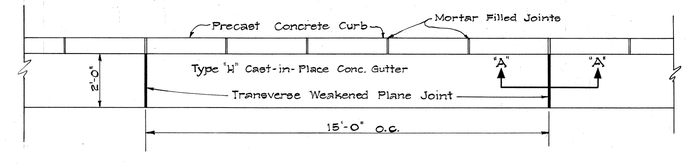

PLAN

Scale: 3/8" = 1'-0"

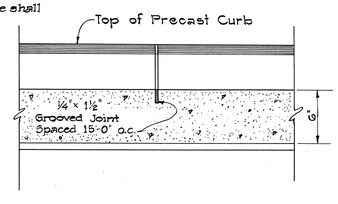

SECTION "A-A"

Scale: 1 1/2" = 1'-0"

TRANSVERSE WEAKENED PLANE JOINT DETAIL FOR TYPE "H" CAST-IN-PLACE CONC. GUTTERS

Scale: As Shown

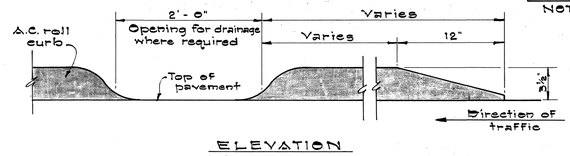

ELEVATION

SECTION

A. C. TRAFFIC ROLL CURB

Not to Scale

STATE OF HAWAII
DEPARTMENT OF TRANSPORTATION

DETAILS FOR CONCRETE CURBS AND GUTTERS

F.A.I. Project No. I-H1-1(5): 24, Unit 2

Scale: As Shown Date: May, 1965

SHEET Nº 1 OF 9 SHEETS

ORIGINAL PLAN	SURVEY PLOTTED BY	DATE
	DRAWN BY	
	TRACED BY	
NOTE BOOK	DESIGNED BY	
	QUANTITIES BY	
No.	CHECKED BY	

LIETZ 1103 ARKWRIGHT TRACING CLOTH 10-60 200P

SPECIAL CURB & GUTTER DETAIL

FED. ROAD DIST. NO.	STATE	FED. AID PROJ. NO.	FISCAL YEAR	SHEET NO.	TOTAL SHEETS
NAWAIB	HAW.	I-HI-1(5)24 Unit 2	1965	31	276

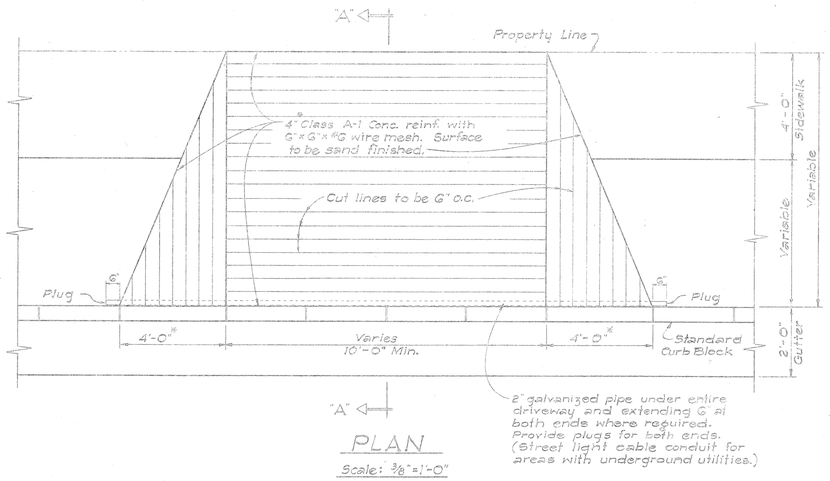

PLAN

Scale: 3/8" = 1'-0"

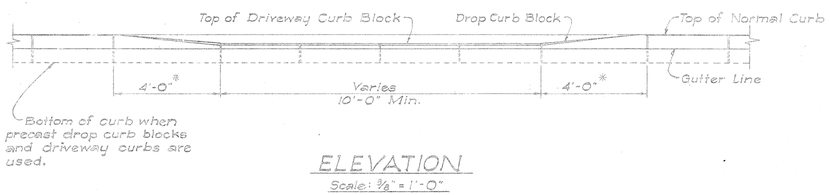

ELEVATION

Scale: 3/8" = 1'-0"

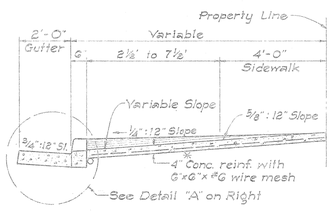

SECTION "A-A"

Scale: 3/8" = 1'-0"

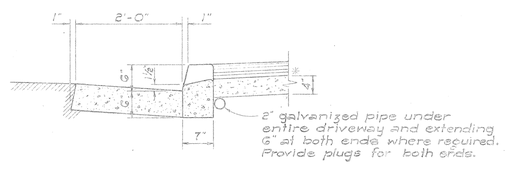

DETAIL "A"

Scale: 3/4" = 1'-0"

CONSTRUCTION DETAILS FOR DROP DRIVEWAY

*Use dimension shown unless otherwise noted on the plans.

LIST OF DRIVEWAYS

	LOCATION			CONC. DROPPED DRIVEWAY		PRIVATE DRIVEWAY			
						REINFORCED CONC.		ASPHALT CONC.	
	STREET	STATION	LOT TAX KEY NO.	WIDTH (Ft.)	AREA (Sq. Ft.)	WIDTH (Ft.)	AREA (Sq. Ft.)	WIDTH (Ft.)	AREA (Sq. Ft.)
**	Old Waialae Rd.	3 + 50 (Lt.)		20	144	–	–	–	–
**	So. King	14 + 75 (Lt.)		29	248	–	–	–	–
**	Kapiolani	24 + 15 (Rt.)		26	225	–	–	–	–
**	Kapiolani	25 + 00 (Rt.)		30	255	–	–	–	–
**	Kapahulu	22 + 10 (Lt.)		12	127	–	–	–	–
**	Ramp (HJS)	4 + 00 (Rt.)		12	120	–	–	–	–
	First Ave.	1 + 55 (Lt.)	3-2-01-117	23.5	179	23.5	24	–	–
	First Ave.	1 + 35 (Rt.)	3-2-01-110	12	104	–	–	12	228
	First Ave.	1 + 10 (Rt.)	3-2-01-111	19	150	19	542	–	–
	Harding	19 + 75 (Lt.)	3-2-01-112	12.5	108	–	–	–	–
	Harding	20 + 50 (Lt.)	3-2-01-43	18.5	147	18.5	389	–	–
	Harding	21 + 10 (Lt.)	3-2-01-102 3-2-01-113	12	104	12	354	–	–
	Harding	21 + 55 (Lt.)	3-2-01-42	12	104	11	125	–	–
	Harding	21 + 75 (Rt.)	3-2-01-26	12	104	–	–	–	–
	Harding	22 + 08 (Lt.)	3-2-01-41	12	104	–	–	13.5	135

** Denotes 6" thick P.C.C. dropped driveway.

NOTES:

1. All measurements shown on this sheet are estimated only.
2. Private A.C. driveways shall have the following pavement section:
   Wearing Surface: 2" Asphalt Concrete Mix V
   Base Course: 6" Untreated Base
   Sub-base Course: None
3. Dropped driveways in Business Zone shall be 6" thick.
4. Concrete Dropped Driveway shall be paid for under Item No. 77, __ inch Reinforced Concrete Driveway
5. Reinforced Concrete Driveway shall be paid for under Item No. 77, ___ inch Reinforced Concrete Driveway unless included in Lump Sum payment for Rehabilitation.
6. Asphalt Concrete Driveway shall be paid for under separate applicable contract Items, unless included in Lump Sum payment for Rehabilitation.

ORIGINAL PLAN	SURVEY PLOTTED BY		DATE
	DRAWN BY		
	TRACED BY		
	DESIGNED BY		
	QUANTITIES BY		
	CHECKED BY		

STATE OF HAWAII
DEPARTMENT OF TRANSPORTATION
HIGHWAYS DIVISION

DETAILS FOR DRIVEWAYS

F.A.I. Proj. No. I-HI-1(5)24 Unit 2

Scale: As shown Date: March, 1965

SHEET No. 2 OF 9 SHEETS

31

FED. ROAD DIST. NO.	STATE	FED. AID PROJ. NO.	FISCAL YEAR	SHEET NO.	TOTAL SHEETS
HAWAII	HAW.	F-HI-1(5)24 Unit 2	1965	32	276

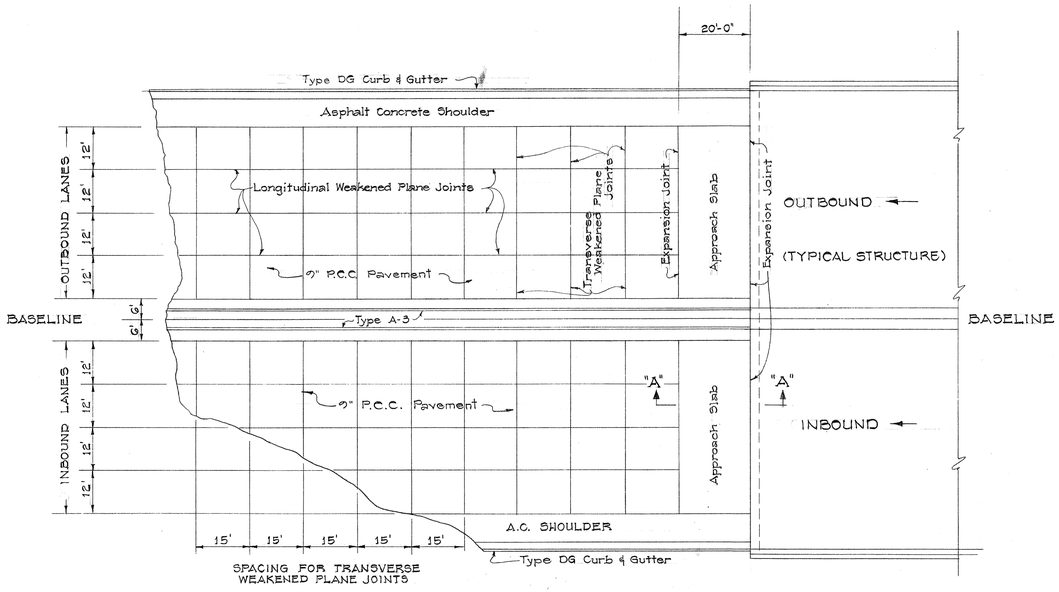

TYPICAL JOINT LOCATION AND LAYOUT PLAN

Scale: 1" = 20'

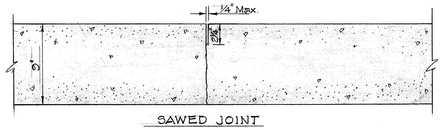

TRANSVERSE WEAKENED PLANE (CONTRACTION) JOINT

Scale: 1½" = 1'-0"

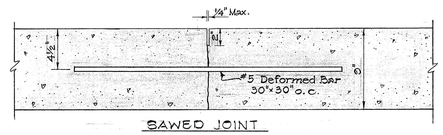

LONGITUDINAL WEAKENED PLANE (CONTRACTION) JOINT

Scale: 1½" = 1'-0"

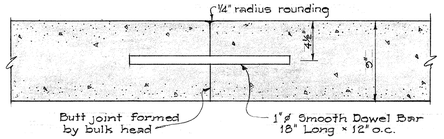

Note: Use only at location of planned Contraction Joint

DETAIL "A"

TRANSVERSE CONSTRUCTION (CONTACT) JOINTS

Scale: 1½" = 1'-0"

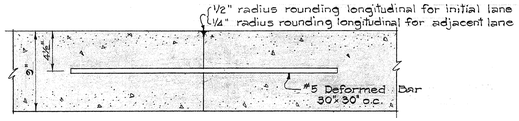

LONGITUDINAL CONSTRUCTION (CONTACT) JOINTS

Scale: 1½" = 1'-0"

GENERAL NOTES — P.C.C. JOINTS

1. Joints shown on this sheet are for 9" P.C.C. Pavement for freeway lanes.
2. The longitudinal weakened plane joint detail shall be applicable at the intermediate traffic lane edge when 2 or more lanes are paved in one continuous pour. The straight tie bars shall be placed mechanically to the depth shown on the detail. All other longitudinal joints shall be constructed in accordance with the contact joint detail shown on these plans.
3. Joints for " 8" P.C.C. Pavements for Speed Change Lanes and Bus Stops" are similar to joints shown on this sheet except that dowels shall be placed 4" from the top of the pavement.
4. 6" Untreated Base shall also be placed beneath the approach slab all in accordance with the requirements of Section 26 of the Special Provisions.

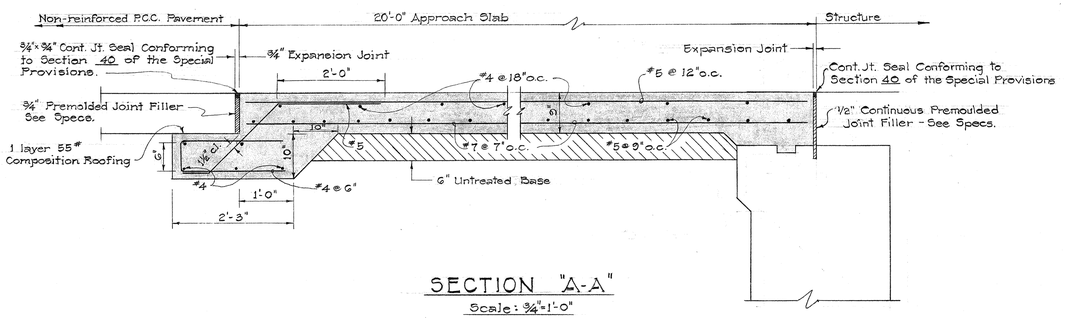

SECTION "A-A"

Scale: 3/4" = 1'-0"

EXPANSION JOINTS AT APPROACH SLAB

NOTE: Refer to Structure No. 3, Miscellaneous Details, Plan Sheet No. 229 for Approach Slab Layout Plan, and details for Reinforcing and Joint Connection to Structure.

ORIGINAL PLAN		DATE
	SURVEY PLOTTED BY	
	DRAWN BY	" "
	TRACED BY	" "
NOTE BOOK	DESIGNED BY	" "
	QUANTITIES BY	" "
No.	CHECKED BY	" "

STATE OF HAWAII
DEPARTMENT OF TRANSPORTATION
HIGHWAYS DIVISION

JOINTS DETAILS FOR PORTLAND CEMENT CONCRETE PAVEMENT

F.A.I. Proj. No. I-HI-1(5):24, Unit 2

Scale: As Shown — Date: May, 1965.

SHEET No. 3 OF 9 SHEETS

32

PRINTED ON NO. 1000H CLEARPRINT

FED. ROAD DIST. NO.	STATE	FED. AID PROJ. NO.	FISCAL YEAR	SHEET NO.	TOTAL SHEETS
HAWAII	HAW.	I-H1-1(5)24 Unit 2	1965	33A	276

Revised : July 16, 1965

CONCRETE CURBS AND GUTTERS

LOCATION			TYPE AND LENGTH (Lin. Ft.)											
ROAD	STA. TO STA.	SIDE	Type A-1 Curb	Type A-2 Curb & Gutter	Type A-3 Curb & Gutter	Type DG Curb & Gutter	Type DBG Curb & Gutter	Type E Curb	Type EG Curb & Gutter	Type G Gutter	Precast Conc. Curb	Type H (C.I.P.) Gutter	
Inbound	41+21 to 42+05	Lt.					93						
Inbound	42+05 to 46+25	Lt.				409							
Inbound	46+25 to 46+29	Lt.					4						
Inbound	55+37 to 55+43	Lt.					6						
Inbound	55+43 to 58+50	Lt.				304							
Inbound	32+82.70 to 34+02.70	Rt.	121										
Inbound	34+02.70 to 39+43.42	Rt.		541									
Inbound	39+43.42 to 39+95	Rt.			52								
Inbound	41+11 to 45+87	Rt.			476								
Inbound	54+55 to 56+25	Rt.			170								
Inbound	58+75 to 59+55	Rt.			80								
Outbound	29+08 to 39+43.98	Lt.		1,035									
Outbound	39+43.98 to 39+93	Lt.			44								
Outbound	41+03 to 45+72	Lt.			463								
Outbound	54+55 to 56+25	Lt.			170								
Outbound	58+95 to 59+55	Lt.			60								
Outbound	32+89 to 38+37.68	Rt.				549							
Outbound	41+00 to 41+33	Rt.					33						
Outbound	41+33 to 44+69.74	Rt.				339							
Outbound	54+55 to 54+65	Rt.					10						
Outbound	54+65 to 59+00	Rt.				444							
Ramp (T)	(I.B) 25+09 to (T) 7+40	Lt., Rt.				554							
Ramp (T)	5+18.95 to 7+74.92	Lt.	263										
Ramp (T-1)	5+06.87 to 6+29.65	Rt.						123					
Ramp (T-1)	6+29.65 to 9+34.95	Rt.							305				
Ramp (T-1)	8+55 to 9+75	Lt.	125										
Ramp (WL-I)	6+06 to 7+57	Lt.	163										
Ramp (WL-I)	7+57 to 9+78	Lt.				223							
Ramp (WL-I)	9+78 to 10+06	Lt.					27						
Ramp (WL-I)	(WL) 6+90± to (WL-I) 6+09	Rt.					80						
Ramp (WL-I)	6+09 to 8+18	Rt.		210									
Ramp (WL-I)	8+18 to 9+80	Rt.	168										
Ramp (WL-0)	4+57± to 8+39	Lt.	395										
Ramp (WL-0)	4+52± to 4+98.02	Rt.					45						
Ramp (WL-0)	4+98.02 to 8+20±	Rt.				324							
Ramp (WL-0)	8+20± to 9+84±	Rt.					163						
Ramp (H1-0)	19+91.70 to 19+71.70	Rt.	5		20								
Inbound	30+42.57 to 39+93.95	Lt.				947							
Old Waialae	2+73 to 7+51	Lt.					54				210	212	
Old Waialae	4+90 to 8+34.42	Rt.		20			40				90	90	
Old Waialae	0+10.5± (Island)	Lt., Rt.									66		
South King	10+34± (Island)	Rt.									7		
South King	10+70.59 (Island)	Lt.									187		
South King	11+77.99 (Island)	Lt.									166		
So. King, Ramp(T-1)	(SK) 12+75± to (T-1) 11+90.62	Lt., Rt.									306	329	
South King	(SK) 14+35.20 (Island)	Lt.									319		
Ramp (T-1)	12+04.62 to 12+95.62	Rt.								91			
South King	15+96.81 (Island)	Lt.									239		
South King	16+33.64 (Island)	Lt.									112		
So. King, Kapiolani	(SK) 21+81± to (KB) 22+92	Lt.									547	547	
South King	22+48± (Island)	Rt.									80		
Kapiolani	20+50.64 (Island)	Lt.									420		
Kapiolani	20+66.35 (Island)	Rt.									173		
KB, HA, KA	(KB) 25+46± to (KA) 18+30	Rt, Lt., Rt.									991	1,032	
Harding	13+27.30 (Island)	Lt.									67		
Harding	13+97.02 (Island)	Lt.									445		
Harding, Kapahulu	(HA) 14+90± to (KA) 22+31.31	Rt., Rt.									369	372	

CONCRETE CURBS AND GUTTERS

LOCATION			TYPE AND LENGTH (Lin. Ft.)										
ROAD	STA. TO STA.	SIDE	Type A-1 Curb	Type A-2 Curb & Gutter	Type A-3 Curb & Gutter	Type DG Curb & Gutter	Type DBG Curb & Gutter	Type E Curb	Type EG Curb & Gutter	Type G Gutter	Precast Conc. Curb	Type H (C.I.P.) Gutter	
Harding	16+59.03 (Island)	Rt.									72		
Harding	16+93.54 (Island)	Lt.									404		
Harding	17+11.81 (Island)	Rt.									445		
Harding	17+26.01 (Island)	Lt., Rt.									305		
Harding	18+13.47 (Island)	Lt.									130		
Harding	19+00 (Island)	Lt.									231		
Kapahulu	21+17 to 22+39.64	Lt.								107		43	
Kapahulu, Harding	(KA) 22+39.64 to (HA) 22+62.85	Rt., Rt.									607	597	
Kapahulu, First Ave.	(KA) 18+23.26 to (FA) 1+85	Lt., Lt.									325	347	
Ramp (H-K)	3+12.99 to 2+59.37	Rt.								50			
Ramp (H-K)	2+59.37 (Island)	Rt.									122	24	
First Ave., Second Ave.	(FA) 1+65 to 2nd Ave. 9+62	Lt., Rt.									448	496	
Kapahulu	20+53.78 (Island)	Rt.									255		
Kapiolani	26+10± (Island)	Rt.									100		

LIST OF 4" PCC PAVEMENTS
(Side Walks, Nose Areas & Traffic Islands)

LOCATION			WIDTH Lin. Ft.	LENGTH Lin. Ft.	AREA Sq. Ft.
ROAD	STA. TO STA.	SIDE			
Inbound	(I.B.) 30+42.57 (Nose)	Lt.			74
Outbound	(O.B.) 32+95± (Nose)	Rt.			50
Ramp (WL-0)	(WL-0) 4+57± (Nose)	Lt.			98
Outbound	(O.B.) 38+62± (Nose)	Rt.			40
Inbound	(I.B.) 39+93.95 (Nose)	Lt.			125
Ramp (H1-0)	(H1-0) 19+91.70 (Nose)	Rt.			74
Outbound	(O.B.) 54+55± to 54+81	Rt.	1	26	26
Old Waialae & Ramp (T)	(WL) 4+60± to 7+53 (S/W & Nose)	Lt.	4.0 to 7.5	142	852
Old Waialae & Ramp (WL-I)	(WL) 7+19.88 to 8+34.42 (S/W & Nose)	Rt.	6.0	92	621
So. King	(SK) 10+70.59 (Island)	Lt.			1,725
So. King	(SK) 11+97.74 (Island)	Lt.			1,127
So. King & Ramp(T-1)	(SK) 12+75± to (TK) 0+54.18	Lt. & Rt.	1.0 to 4.0	221	361
So. King	(SK) 14+35.20 (Island)	Lt.			2,984
So. King	(SK) 15+96.81 (Island)	Lt.			1,316
So. King	(SK) 16+33.64 (Island)	Lt.			342
So. King & Kapiolani	(SK) 21+81± to (KB) 23+06	Lt, Lt	6.0 to 8.5	550	3,796
Kapiolani	(KB) 20+50.64 (Island)	Lt.			1,993
Harding & Kapiolani	(HA) 10+73.90 (Island)	Lt.			1,248
Kapiolani, Harding & Kapahulu	(KB) 27+02± to (KA) 18+58	Rt., Lt, Rt.	6.0 to 8.5	1020	6,990
Harding	(HA) 13+40± (Island)	Lt.			231
Harding	(HA) 13+97.02 (Island)	Lt.			2,223
Harding & Kapahulu	(HA) 14+75± to (KA) 21+70±	Rt., Rt.	4.0 to 9.5	320	2,588
Kapahulu	(KA) 20+53.78 (Island)	Rt.			1,254
First Ave. Extension & Harding	(FAE Rt) 0+47± to (HA) 22+59±	Rt., Rt.	6.0 to 11.5	572	3,017
Harding, Kapahulu & First Ave. Extension	(HA) 17+11.81 (S/W & Nose)	Rt, Lt., Lt.	6	265	1,750
Harding & Kapahulu	(HA) 16+59.03 (Island)	Rt.			295
Harding	(HA) 17+26.01 (Island)	Lt.			2,032
Harding, Kapahulu & Ramp (HK)	(HA) 16+93.54 (S/W & Nose)	Lt., Lt., Lt.	6.0 to 14.5	70	888
Harding & Ramp(HK)	(HA) 18+13.47 (Island)	Lt., Lt.			665
Kapahulu, Ramp(HK) & First Ave.	(KA) 18+23.26 to (FA) 1+78±	Lt., Rt, Lt.	6.5 to 7.5	280	1,948
Harding	(HA) 19+00 (Island)	Lt.			1,091
Ramp(HK) & First Ave.	(HK) 2+59.37 (Island)	Rt., Lt.			643
First Ave., Harding & Second Ave.	(FA) 1+65± to (SA) 9+62±	Rt., Lt., Rt.	4.0 to 6.5	420	1,477

NOTE:

All Lengths and Areas shown on this sheet are estimates only.

STATE OF HAWAII
DEPARTMENT OF TRANSPORTATION
HIGHWAYS DIVISION

CONCRETE CURB, GUTTER, CURB & GUTTER, AND 4" PCC PAVEMENT LIST

F.A.I. Proj. No. I-H1-1(5) 24, Unit 2

DATE: May 1965

SHEET No. 4 OF 9 SHEETS

ORIGINAL PLAN | SURVEY PLOTTED BY | DRAWN BY | TRACED BY | DESIGNED BY | QUANTITIES BY | CHECKED BY | DATE | NOTE BOOK No.

REPRODUCED ON LEKTRAPRINT 1000-H

33 A1

FED. AID DIST. NO.	STATE	FED. AID PROJ. NO.	FISCAL YEAR	SHEET NO.	TOTAL SHEETS
HAWAII	HAWAII	I-H1-1(5): 24 Unit 2	1965	34	276

BOLT DIMENSIONS

TYPE BOLT	D	L
Splice Bolt	5/16"	1 1/4"
Post Bolt for Conc. Post w/ Single Wood Block	3/32"	1 8"
Post Bolt for Conc. Post w/Double Wood Blocks	3/32"	2 6"

TYPE BOLT	D	L
Rail Bolt for Metal Block	3/32"	2"
Post Bolt for Conc. Post without Block	3/32"	10 1/2"
Post Bolt for Metal Post w/Metal Block	0 "	1 3/4"

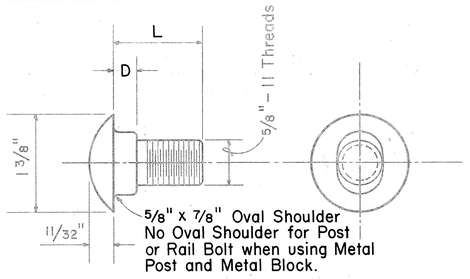

SPLICE, RAIL, AND POST BOLTS

Scale : Full Size

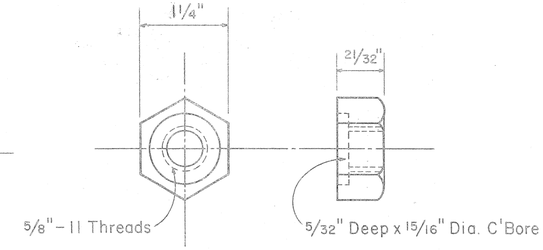

HEXAGON NUT

Scale: Full Size

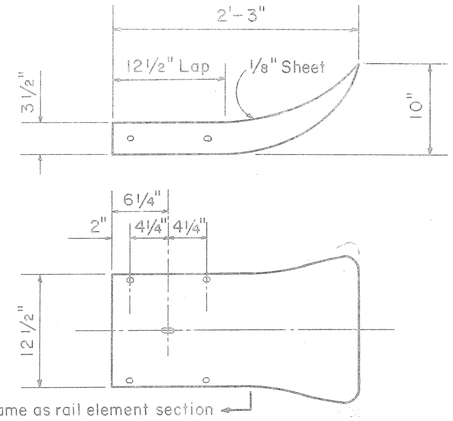

FLARED END

Scale: 1 1/2" = 1'-0"

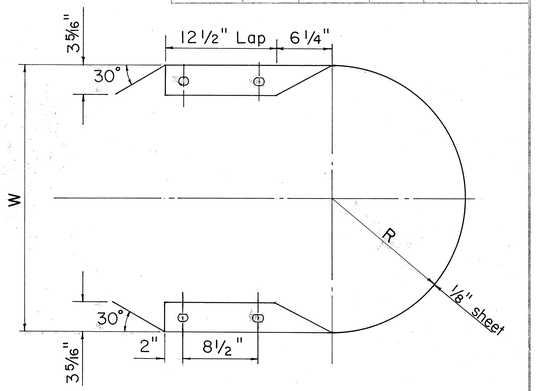

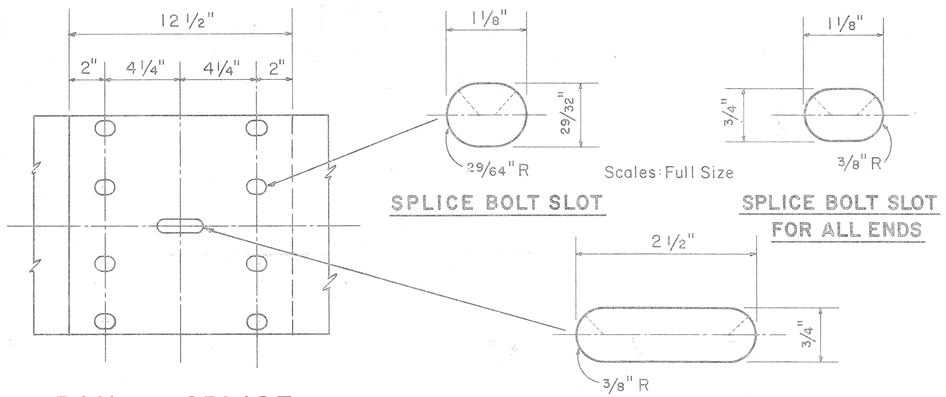

RAIL SPLICE

Scale: 3" = 1'-0"

SPLICE BOLT SLOT

SPLICE BOLT SLOT FOR ALL ENDS

POST BOLT SLOT

Scale: Full Size

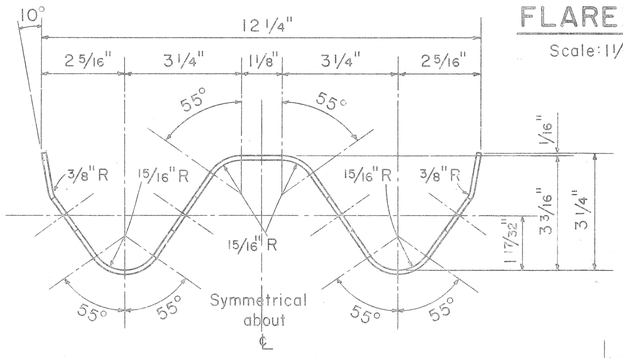

RAIL ELEMENT SECTION

Scale: Half Full Size

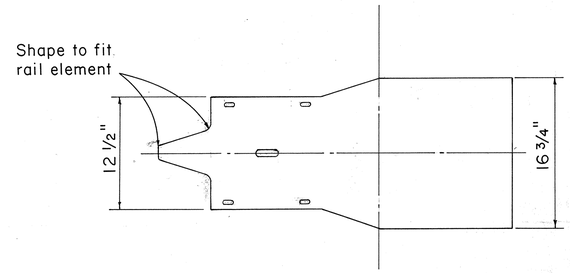

MEDIAN END AND RAMP NOSE

Scale : 1 1/2" = 1'-0"

MEDIAN END AND RAMP NOSE DIMENSIONS

TYPE OF POST AND BLOCK	W	R
Double Metal Guard Rail on Conc. Post with Wood Blocks	29 3/4"	14 7/8"
Double Metal Guard Rail on Metal Post with Metal Blocks (BJ 6)	24 3/4"	12 3/8"
Double Metal Guard Rail on Conc. Post without Blocks	14 3/4"	7 3/8"

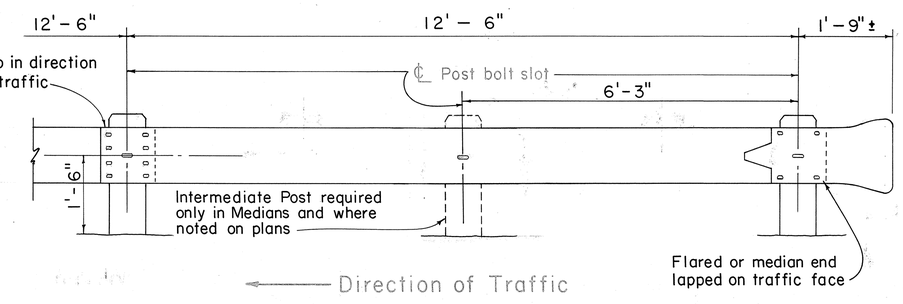

STANDARD METAL GUARD RAIL ELEMENT

Scale: 3/4" = 1'-0"

NOTE:

1. Normal Medial post spacing shall be 6'-3" c. to c.
2. Normal post spacing for freeway and ramp shoulders shall be 12'-6" c. to c.
3. At certain locations, where the standard 12'-6" guard rail element will not fit because of non-standard post spacing, the Contractor shall cut the rail element for proper installation.
4. All exposed metal surfaces of the rail element upon cutting and bolt hole drilling shall be galvanized in accordance with the requirements of AASHO Designation: M 180.
5. When Concrete Post with Wood Spacer Block is used, the Contractor shall have the option of using any approved type of metal guard rail element.
6. When Metal Post with Metal Spacer Block is used, the Contractor shall use only galvanized steel guard rail element, unless prior to Bid Opening, the Contractor obtains a certification of approval from the State for method of preventing corrosion by contact of dissimilar metals.

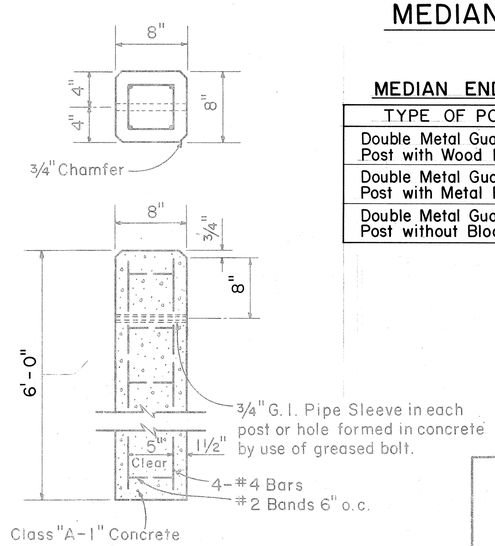

NOTE: Concrete posts shall be precast, except on structures. Concrete posts on structures shall be cast-in-place. See specific Structure Plans for Post Anchorage Detail.

DETAIL OF CONCRETE POST

Scale: 1 1/2" = 1'-0"

STATE OF HAWAII
DEPARTMENT OF TRANSPORTATION
HIGHWAYS DIVISION

DETAILS FOR METAL GUARD RAIL

F. A. I. Project No. I-H1-1(5): 24, Unit 2

Scales: As Noted. Date: May, 1965

SHEET NO. 5 OF 9 SHEETS

33 41

ORIGINAL PLANS	SURVEY PLOTTED BY	DATE
	DRAWN BY	
	TRACED BY	
NOTE BOOK	DESIGNED BY	
	QUANTITIES BY	
No.	CHECKED BY	

FED. ROAD DIST. NO.	STATE	FED. AID PROJ. NO.	FISCAL YEAR	SHEET NO.	TOTAL SHEETS
HAWAII	HAW.	I-H1(5)24 Unit 2	1965	35	276

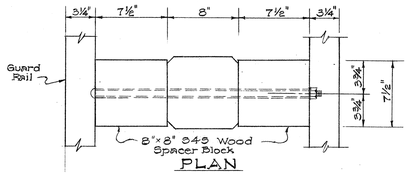

PLAN

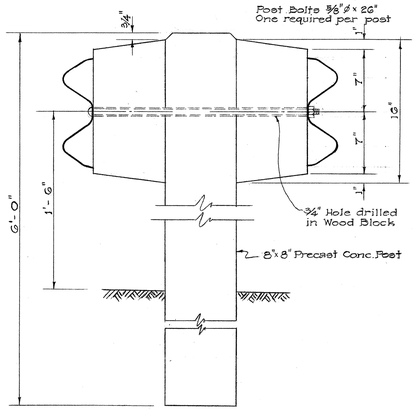

ELEVATION

DOUBLE METAL GUARD RAIL ON PRECAST CONC. POST WITH SPACER BLOCKS

Scale: 1½" = 1'-0"

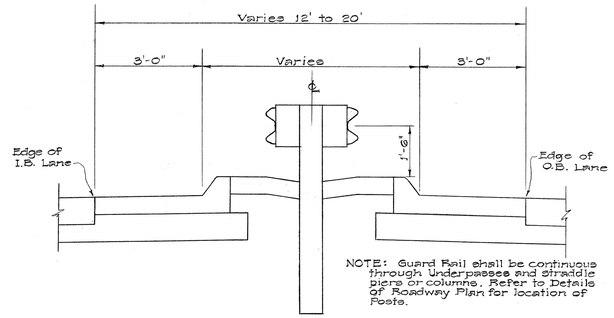

TYPICAL MEDIAL GUARD RAIL DETAIL

Scale: ½" = 1'-0"

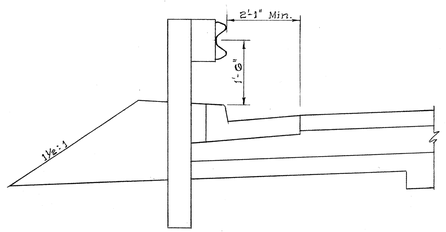

TYPICAL GUARD RAIL AT FREEWAY AND RAMP SHOULDERS

Scale: ½" = 1'-0"

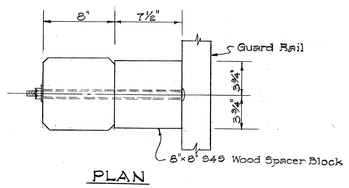

PLAN

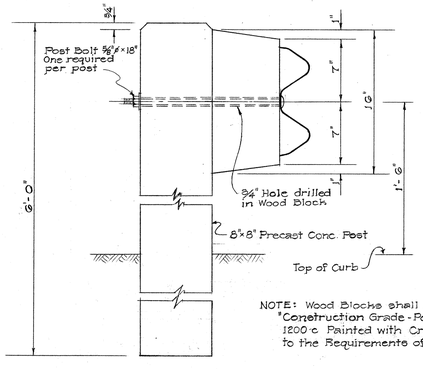

NOTE: Wood Blocks shall be Douglas Fir "Construction Grade - Posts and Timbers", 1200 c Painted with Creosote Conforming to the Requirements of AASHO Designation: M-133

ELEVATION

SINGLE METAL GUARD RAIL ON PRECAST CONC. POST WITH SPACER BLOCK

Scale: 1½" = 1'-0"

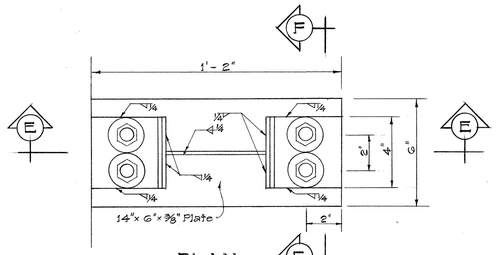

PLAN

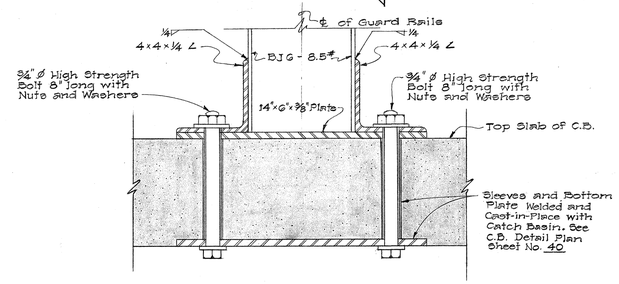

SECTION "E-E"

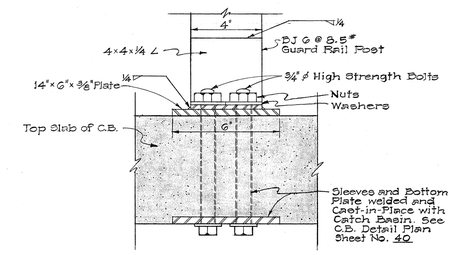

SECTION "F-F"

CONNECTION DETAIL FOR METAL POST ON CATCH BASIN

Scale: 3" = 1'-0"

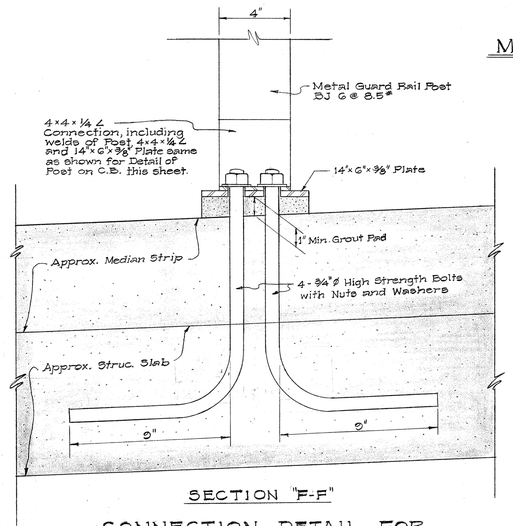

SECTION "F-F"

CONNECTION DETAIL FOR METAL POST ON BRIDGE MEDIAN

Scale: 3" = 1'-0"

NOTE: 1. Post on Catch Basin
All materials necessary for installation of Metal Guard Rail Post on Catch Basin, except sleeves and Bottom Plate, incidental to Item No. 80(2), Single Metal Guard Rail. Sleeves and Bottom Plate incidental to Item No. 48(1), Reinforcing Steel other than in Bridges and Retaining Walls.
Metal post shall be used for Guard Rail on Catch Basin No. 14 and No. 15. No alternate type post shall be used. See Plan Sheet 40

2. Post on Bridge Median
All materials necessary for installation of Metal Guard Rail on Bridge Median incidental to Metal Guard Rail on Structures.

When Metal Posts are used on Bridge Median the connection of such post shall conform to the Details shown on this sheet.

When Concrete Posts are used on Bridge Median the post shall be 8"×8" cast-in-place concrete and conform to the Details shown for Structure No. 2 and Structure No. 3.

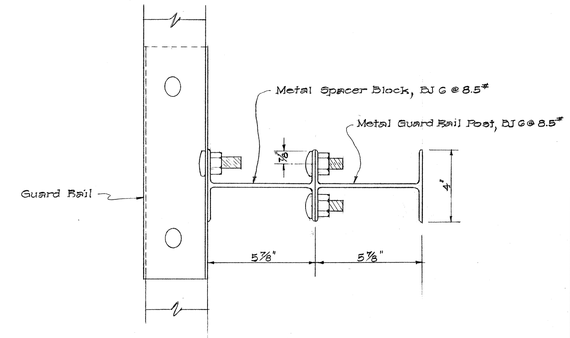

PLAN

(Less Post Connection)
See Connection Detail on this Sheet.

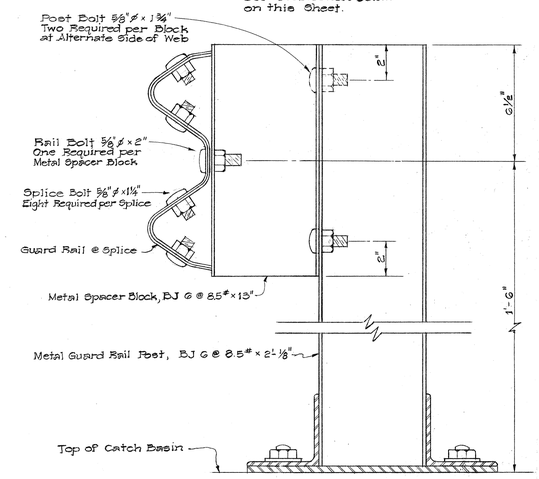

ELEVATION

DETAIL OF METAL GUARD RAIL ON METAL POST & METAL SPACER BLOCK

Scale: 3" = 1'-0"

NOTE: Single Guard Rail shown. For Double Guard Rail additional spacer block required on opposite side of posts.

STATE OF HAWAII
DEPARTMENT OF TRANSPORTATION
HIGHWAYS DIVISION

DETAILS FOR METAL GUARD RAIL

F.A.I. Proj. No. I-H1-1(5):24, Unit 2

Scale: As Shown — Date: May, 1965

SHEET No. 6 OF 9 SHEETS

ORIGINAL PLAN	SURVEY PLOTTED BY	DATE
	DRAWN BY	"
	TRACED BY	"
NOTE BOOK	DESIGNED BY	"
	QUANTITIES BY	"
No.	CHECKED BY	"

FED. ROAD DIST. NO.	STATE	FED. AID PROJ. NO.	FISCAL YEAR	SHEET NO.	TOTAL SHEETS
HAWAII	HAW.	I-HI-1(5)-24 Unit 2	1965	36	276

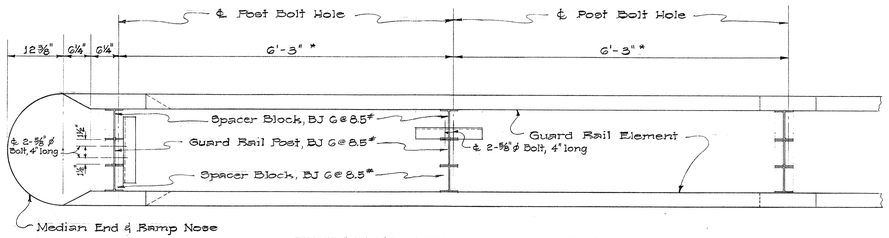

DOUBLE METAL GUARD RAIL

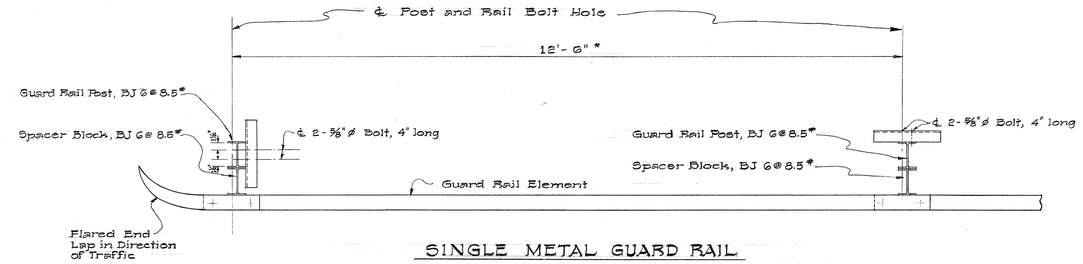

SINGLE METAL GUARD RAIL

PLAN

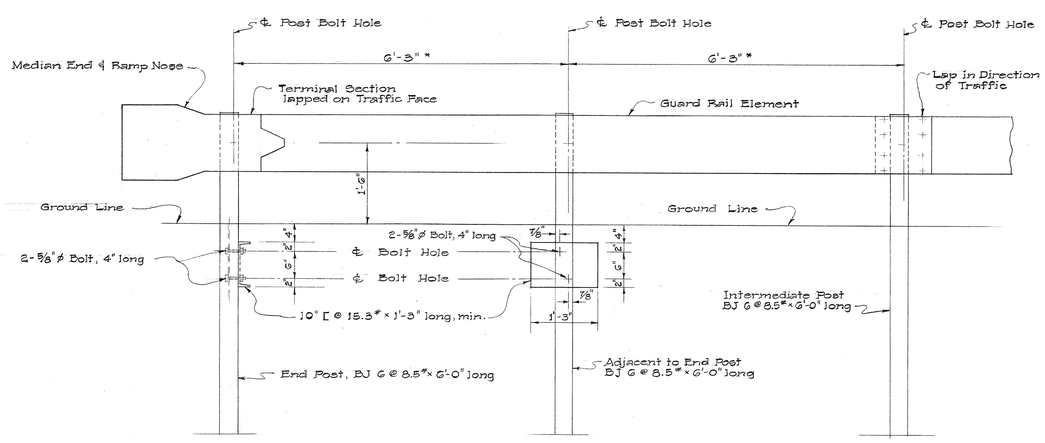

DOUBLE METAL GUARD RAIL

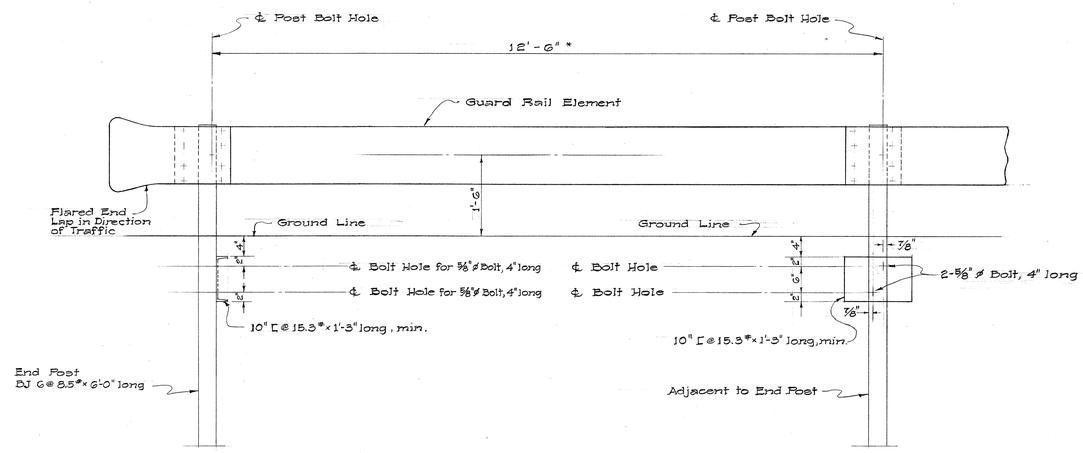

SINGLE METAL GUARD RAIL

FRONT ELEVATION

DETAIL FOR METAL GUARD RAIL ON METAL POST AND METAL SPACER BLOCK(S)

Scale: 3/4" = 1'-0"

NOTES

1. * Normal spacing shown. If conditions do not permit normal spacings, Contractor shall cut the rail element for proper installation. See Plan Sheet No. 34 for Metal Guard Rail Element Notes.
2. See Plan Sheet No. 35 for Connection Details for Metal Post and Typical Installation.

METAL GUARD RAIL PLACEMENT LIST

TYPE	LOCATION	STATION to STATION	ESTIMATED LENGTH Lineal Feet	TYPE	LOCATION	STATION to STATION	ESTIMATED LENGTH Lineal Feet
Double	Medial Strip Freeway	(I.B.) 25+12± to 34+38±	932	Single	Ramp (T) Lt.	(T) 6+75 to 7+25	50
Single	Medial Strip Freeway	(I.B.) 34+38± to 39+96	1125	* Single	Ramp (T) Lt.	(T) 5+16 to 6+75	162
Single	Structure No. 2	(I.B.) 39+96 to 41+12	232	* Single	Ramp (T) Lt.	Old Waialae Nose	50
Single	Medial Strip Freeway	(O.B.) 41+12 to 44+60	726	Single	Ramp (T-1) Lt.	(T-1) 8+75 (Nose)	56
Double	Medial Strip Freeway	(O.B.) 44+60 to 45+80	120	Single	Ramp (WL-I) Lt.	(WL-I) 6+35 to 9+35	375
Double	Structure No. 3	(O.B.) 45+80 to 54+50	870	Single	Ramp (WL-I) Rt.	(WL-I) 5+92 to 6+82	88
Double	Medial Strip Freeway	(O.B.) 54+50 to 56+25	176	Single	Ramp (WL-I) Rt.	(WL-I) 9+73 (Nose)	50
** Double	Medial Strip Freeway	(O.B.) 58+88 to 59+51	63	* Single	Ramp (WL-O) Lt.	(WL) 5+24 to (WL-O) 7+69	288
Single	I.B. Shoulder	(I.B.) 41+26 to 46+25	505	* Single	Old Waialae Lt.	(WL) 4+65 to 4+90	25
Single	O.B. Shoulder	(O.B.) 41+31 to 44+50	321	* Single	Old Waialae Lt.	(WL) 6+58 to 6+83	25
Single	O.B. Shoulder	(O.B.) 54+85 to 55+78	94	Single	Old Waialae Lt.	(WL) 6+83 to 7+21	38
* Single	O.B. Shoulder Rt.	(O.B.) 57+88 to 58+77	90				
* Single	Ramp (T) Rt.	(I.B.) 25+10 to (T) 7+32	561				

* Reconstructed
** Reconstructed - No Spacer Blocks Required

Note: All lengths shown on this sheet are estimates only.

STATE OF HAWAII
DEPARTMENT OF TRANSPORTATION
HIGHWAYS DIVISION

DETAILS FOR METAL GUARD RAIL

F.A.I. Proj. No. I-H1-1(5): 24, Unit 2

Scale: As Shown Date: May 1965

SHEET No. 7 OF 9 SHEETS

ORIGINAL PLAN	SURVEY PLOTTED BY	DATE
	DRAWN BY	"
	TRACED BY	"
NOTE BOOK	DESIGNED BY	"
No.	QUANTITIES BY	"
	CHECKED BY	"

PRINTED ON NO. 1000H CLEARPRINT

36

FED. ROAD DIST. NO.	STATE	FED. AID PROJ. NO.	FISCAL YEAR	SHEET NO.	TOTAL SHEETS
HAWAII	HAW.	I-H1-1(5):24 Unit 2	1965	37	276

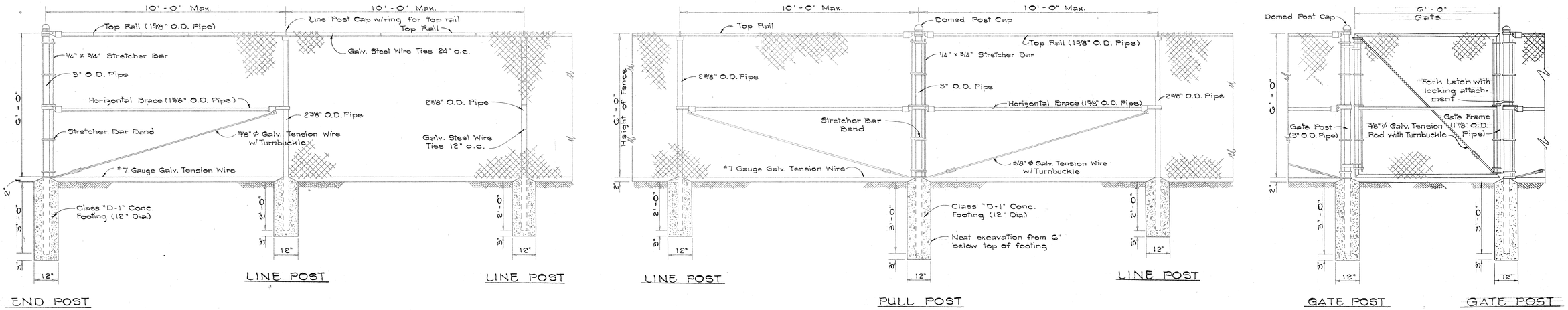

CHAIN LINK FENCE DETAIL

Scale: 1/2" = 1'-0"

NOTE: Concrete footings for fence and gate posts shall be formed to 6" below ground line.
The top of the concrete footings at the post shall extend a minimum of 2" above ground line and the surface troweled so that the outer periphery of the top of the footing is flush with the ground.

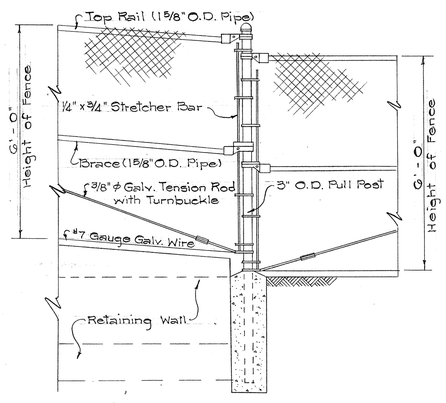

TYPICAL FENCE CONNECTION DETAIL AT RETAINING WALL

Scale: 1/2" = 1'-0"

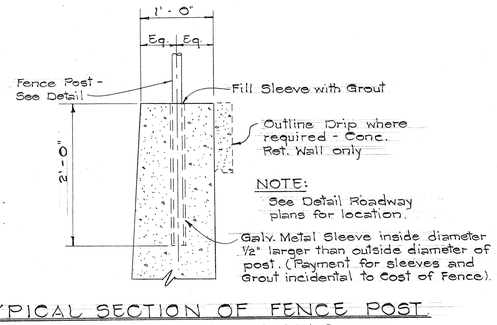

TYPICAL SECTION OF FENCE POST ON RETAINING WALLS

Scale: 1" = 1'-0"

ACCESS CONTROL 6 FT. CHAIN LINK FENCE WITH CONCRETE FOOTINGS

LOCATION			LENGTH Lin. Ft.
ROAD	STA. TO STA.	SIDE	
Old Waialae	(WL) 4+65 to 4+93	Lt.	28
Old Waialae	(WL) 6+58 to 7+22	Lt.	64
Ramp (T-1)	12+37 to 13+67	Lt.	110
South King	(SK) 19+84 to 23+12	Lt.	322
Kapiolani	(KB) 21+88 to 22+94	Lt.	100
First Ave. Ext.	(FAE) 1+14 to 1+34	Rt.	59
Harding	(HA) 20+34 to 21+44	Rt.	110
Ramp (WL-O)	5+62 to ~~7+83~~ 8+40	Rt.	~~250~~ 303
Ramp (WL-I)	6+31 to 9+38	Lt.	~~330~~ 310
Ramp (H1-I)	18+38 to 22+76	Lt.	474
Ramp (H1-I)	24+04 to 29+04	Lt.	303
Outbound	O.B. 55+29 to O.B. 58+98	Rt.	388

ACCESS CONTROL 6 FT. CHAIN LINK FENCE ON RETAINING WALLS

LOCATION	LENGTH Lin. Ft.
Retaining Wall #2-1 I (Structure No. 2)	~~95~~ 41
Retaining Wall #2-2 II (Structure No. 2)	~~66~~ 78
Retaining Wall #2-3 III (Structure No. 2)	~~38~~ 50

CHAIN LINK FENCE GATES

LOCATION			DIMENSIONS		NUMBER
ROAD	STATION	SIDE	HEIGHT	WIDTH	
South King	21+18	Lt.	6'	6'	1
Kapiolani	22+60	Lt.	6'	6'	1
First Ave. Ext.	1+38	Rt.	6'	6'	1
Harding	21+47	Rt.	6'	6'	1

NOTE: All lengths shown on this sheet are estimates only.

3 FT. CHAIN LINK FENCE WITH CONCRETE FOOTINGS

LOCATION			LENGTH Lin. Ft.
ROAD	LOT TAX KEY	SIDE	
First Avenue	3-2-01:117	Lt.	18

3 FT. CHAIN LINK FENCE ON RETAINING WALLS

LOCATION	LENGTH Lin. Ft.
CRM Wall #W-4 (Lot Tax Key 3-2-01:111)	92

ORIGINAL PLAN	SURVEY PLOTTED BY	DATE
	SURVEY NOTES	"
	TRACED BY	"
NOTE BOOK	DESIGNED BY	"
	QUANTITIES BY	"
No.	CHECKED BY	"

STATE OF HAWAII
DEPARTMENT OF TRANSPORTATION

DETAIL OF ACCESS CONTROL 6 FEET CHAIN LINK FENCE & GATES

F.A.I. Proj. No. I-H1-1(5):24, Unit 2

Scale: As Shown — Date: May 1965

SHEET No. 8 OF 9 SHEETS

37

FED. ROAD DIST. NO.	STATE	FED. AID PROJ. NO.	FISCAL YEAR	SHEET NO.	TOTAL SHEETS
NAUPAH	HAW.	I-H-1(5):24 Unit 2	1965	38	276

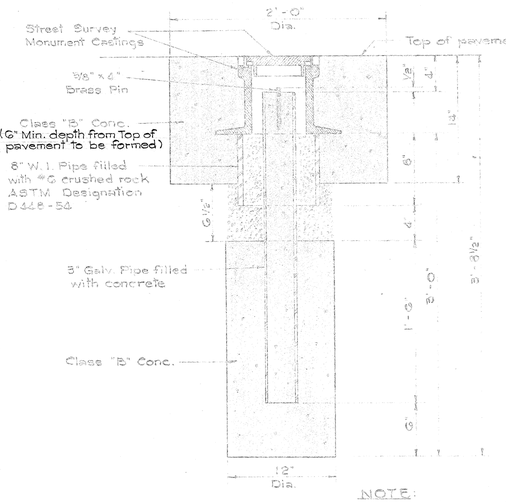

NOTE:
Where the excavation extends into solid rock the depth may be decreased if approved by the Engineer.

STREET SURVEY MONUMENT
Scale: 1 1/2" = 1'-0"

TOP VIEW OF COVER AND PORTION OF FRAME

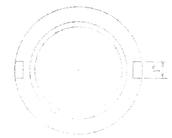

BOTTOM VIEW OF COVER

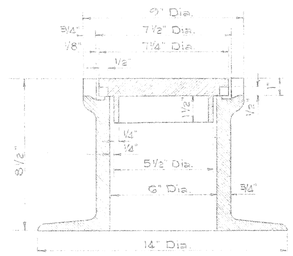

SECTIONAL VIEW OF FRAME AND COVER

STREET SURVEY MONUMENT CASTINGS
Scale: 3" = 1'-0"

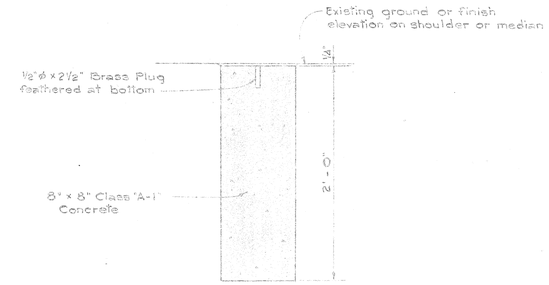

DETAIL FOR CENTER LINE AND REFERENCE SURVEY MONUMENT
Scale: 1 1/2" = 1'-0"

NOTE: Concrete footings for monuments shall be formed to a depth of 6" below finish ground elev. or precast concrete to size shown.

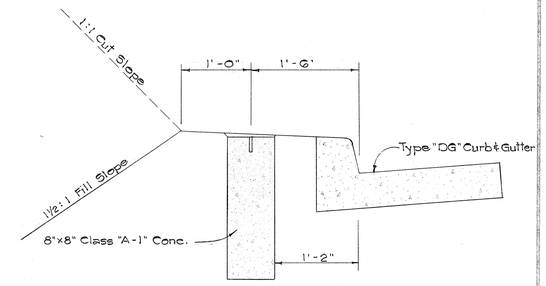

TYPICAL SECTION OF REFERENCE SURVEY MONUMENT
Scale: 1" = 1'-0"

LIST OF CENTERLINE AND REFERENCE SURVEY MONUMENTS

LOCATION				No. OF MONUMENTS
ROAD	STATION	OFFSET FROM BASELINE TO REF. MON.		
		LEFT	RIGHT	
I.B. ℄ P.C.	25+83.81			1
I.B. ℄ P.I.				1
I.B. ℄ P.T.	32+82.70			1
I.B. ℄ P.O.T.	37+01.74			1
O.B. ℄ S.T.	37+02.30			1
I.B. ℄ P.C.	37+68.15			1
I.B. ℄ P.T.	39+73.42	45.0		2
I.B. ℄ P.C.	43+67.01	45.0		2
O.B. ℄ P.C.	56+98.50	77.5	77.5	2

STATE OF HAWAII
DEPARTMENT OF TRANSPORTATION
HIGHWAYS DIVISION

DETAIL OF SURVEY MONUMENTS

F.A.I. Proj. No. I-H1-1(5):24, Unit 2

Scale: As Shown Date: May, 1965

SHEET No. 2 OF 2 SHEETS

38

ORIGINAL PLAN	SURVEY PLOTTED BY	DATE
	DRAWN BY	"
	TRACED BY	"
NOTE BOOK	DESIGNED BY	"
	QUANTITIES BY	"
No.	CHECKED BY	"

PRINTED ON NO. 1000H CLEARPRINT

FED. ROAD DIST. NO.	STATE	FED. AID PROJ. NO.	FISCAL YEAR	SHEET NO.	TOTAL SHEETS
HAWAII	HAW.	I-H1-1(5)24 Unit 2	1965	39A	276

Revised: July 16, 1965

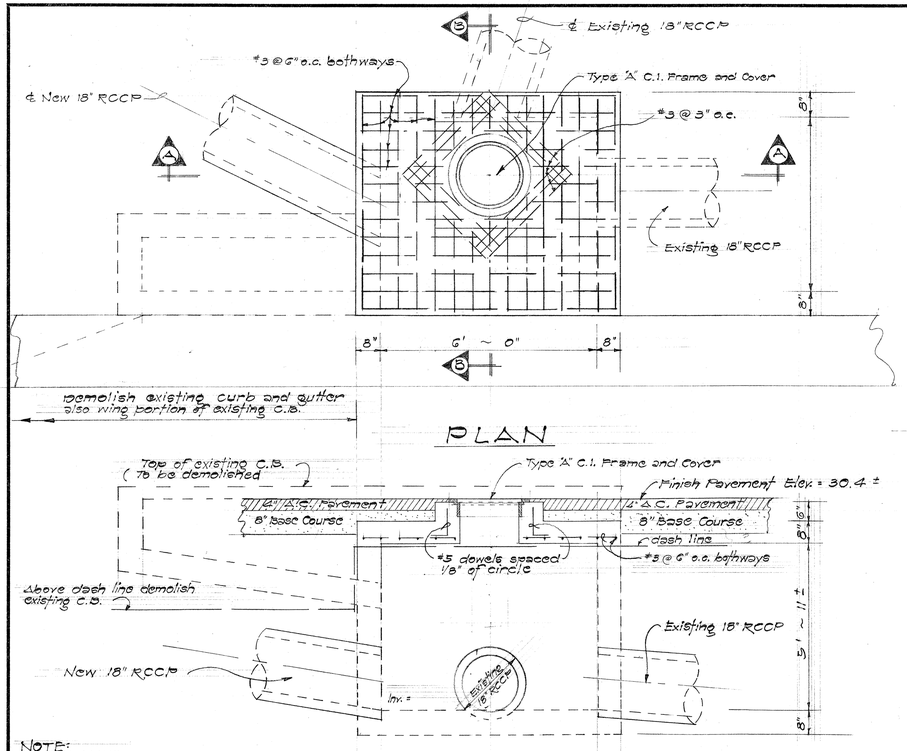

PLAN

NOTE:
Demolish portion of existing Type "B" C.B. above dashed line. Convert to S.D.M.H. conforming to the details and elevation shown. Salvage Type "B" C.I. Frame and Cover.

SECTION "A-A"

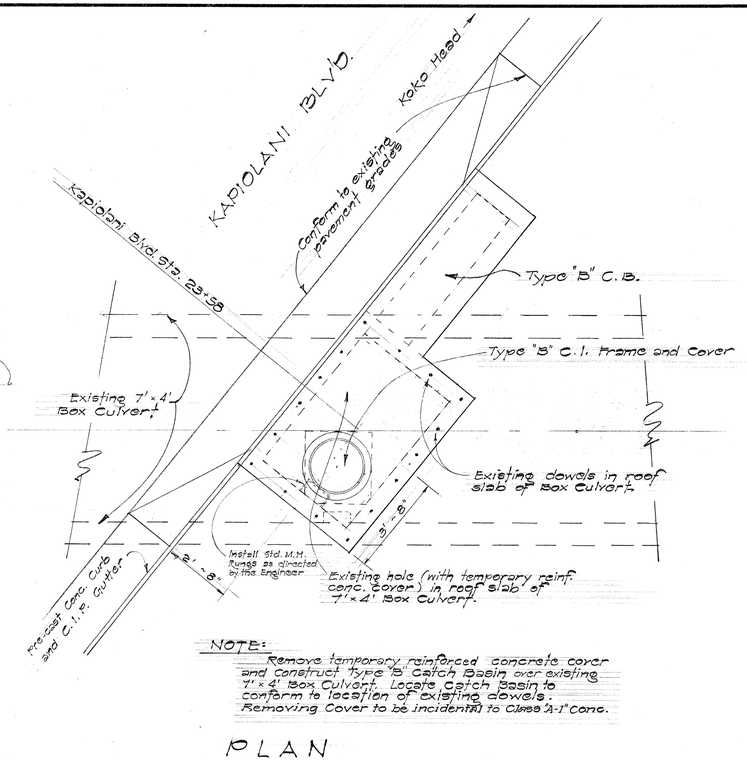

NOTE:
Remove temporary reinforced concrete cover and construct Type "B" Catch Basin over existing 7' × 4' Box Culvert. Locate Catch Basin to conform to location of existing dowels. Removing Cover to be incidental to Class "A-1" Conc.

PLAN

C.B. No 20 at KAPIOLANI BLVD. ℄ STA. 23+58

Scale: 3/8" = 1'-0"

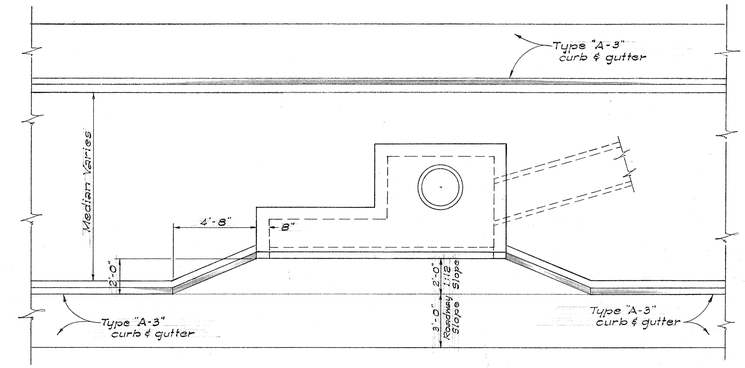

NOTE:
Refer to the standard catch basin details for dimensions, reinforcements, concrete, etc.

TYPE "B" CATCH BASIN WITH MODIFIED GUTTER APRON

Scale: 1/4" = 1'-0"

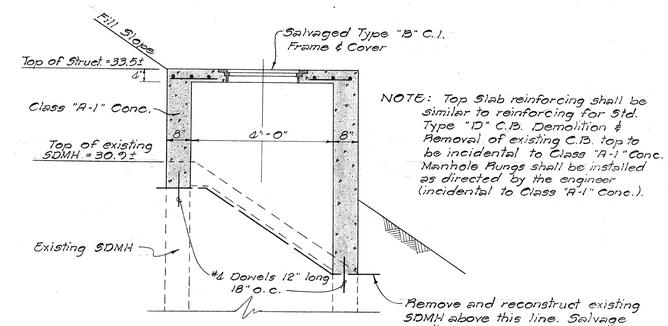

NOTE: Top Slab reinforcing shall be similar to reinforcing for Std. Type "D" C.B. Demolition & Removal of existing C.B. top to be incidental to Class "A-1" Conc. Manhole Rungs shall be installed as directed by the engineer (incidental to Class "A-1" Conc.).

DETAIL FOR ADJUSTMENT OF TOP OF EXISTING SDMH RAMP (WL-0) STA. 11+36 O/G Rt. 17' ±

Scale: 1/2" = 1'-0"

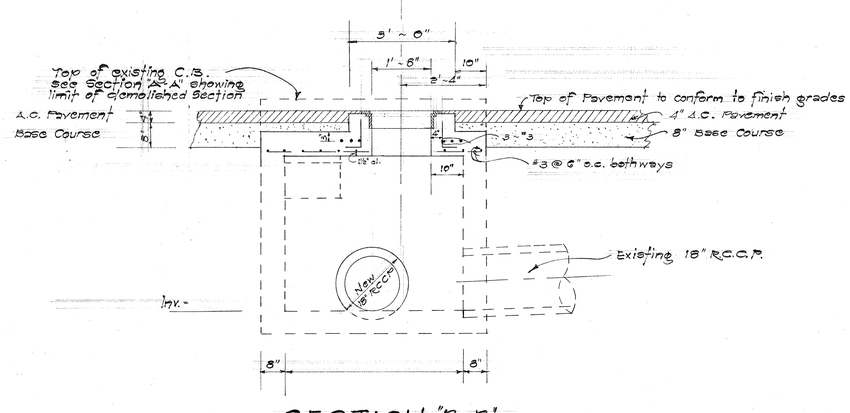

SECTION "B-B"

S.D.M.H. No 12 at KING ST. ℄ STA. 16+03

Scale: 1/2" = 1'-0"

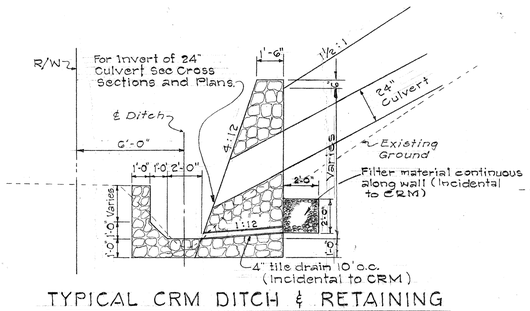

TYPICAL CRM DITCH & RETAINING WALL SECTION

℄ STA. 26+00 - 29+50 Lt.

Scale: 1/4" = 1'-0"

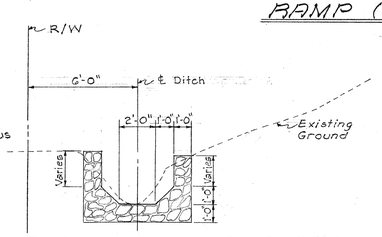

TYPICAL CRM DITCH SECTION

℄ STA. 29+50 - 30+50 ± Lt.

Scale: 1/4" = 1'-0"

STATE OF HAWAII
DEPARTMENT OF TRANSPORTATION
HIGHWAYS DIVISION

DRAINAGE DETAILS

F.A.I. Proj. No. I-H1-1(5):24, Unit 2

Scale: As shown Date: May, 1965

SHEET No. 1 OF 7 SHEETS

ORIGINAL PLAN		DATE
	SURVEY PLOTTED BY	
	DRAWN BY	
	TRACED BY	
	DESIGNED BY	
NOTE BOOK	QUANTITIES BY	
No.	CHECKED BY	

PRINTED ON NO. 1000H CLEARPRINT

39 A

FED. ROAD DIST. NO.	STATE	FED. AID PROJ. NO.	FISCAL YEAR	SHEET NO.	TOTAL SHEETS
HAWAII	HAW.	I-H1-1(5)24 Unit 2	1965	40	276

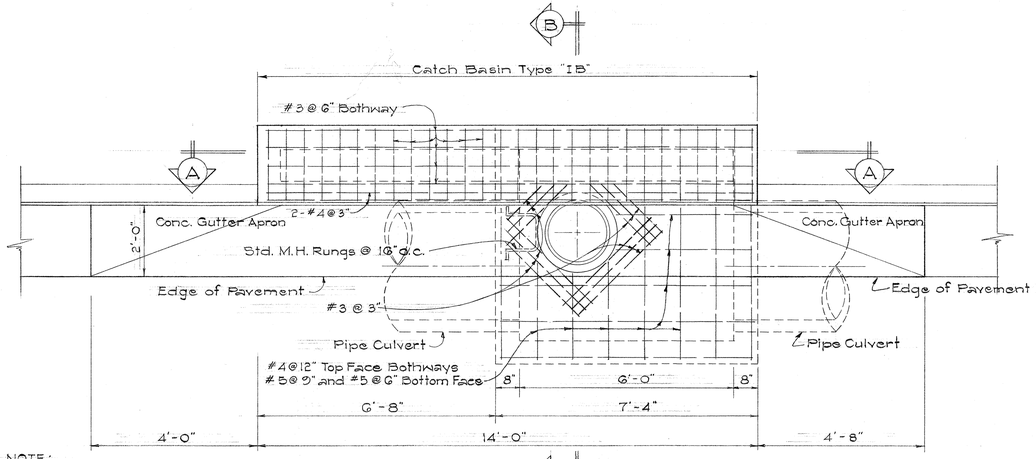

NOTE:

1. Catch Basin type "IC" is similar but opposite hand.
2. Location of Frame and Cover and/or Standard manhole rungs shall be determined by the Engineer.

PLAN

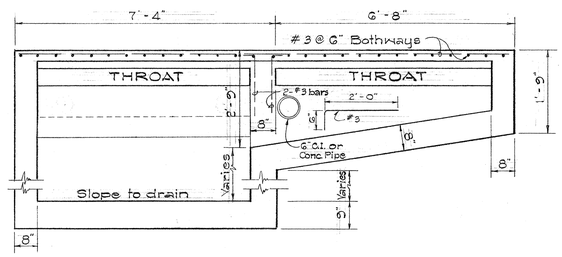

SECTION "A-A"

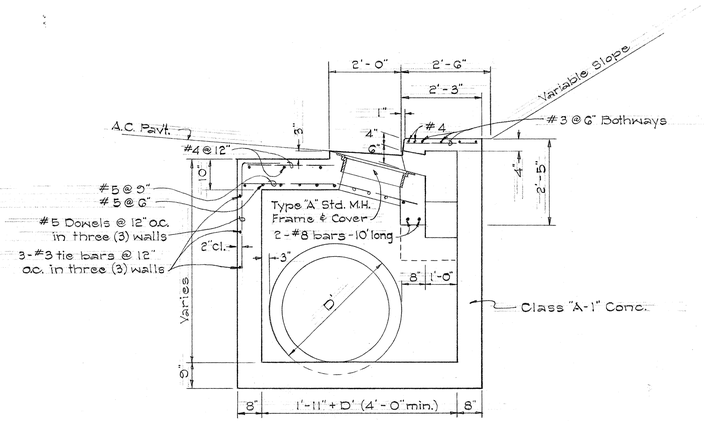

SECTION "B-B"

CATCH BASIN TYPE "IB" & "IC"

Scale: 1/2" = 1'-0"

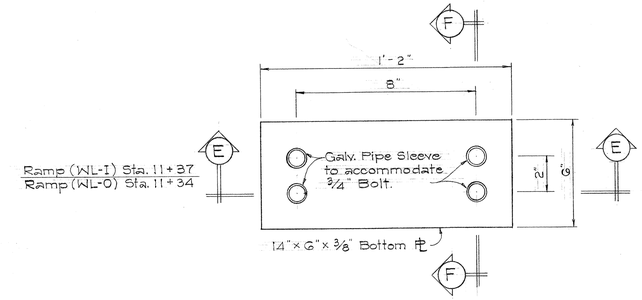

PLAN

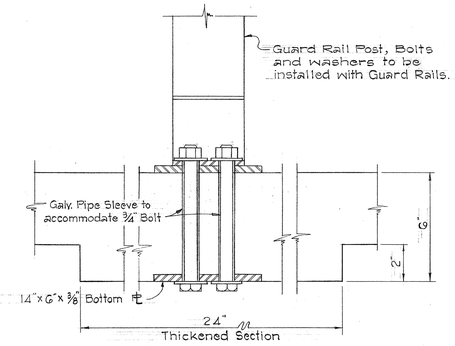

SECTION "F-F"

NOTE

1. Reinforcing for top slab similar to reinforcing for type "IB" C.B. except for thickened section.
2. Bottom Plate assembly (bottom plate and sleeves) shall be installed with roof slab, incidental to reinforcing steel.
3. Exposed surfaces of the bottom plate assembly shall be painted with one prime coat and two field coats in accordance with Section 49 of the specifications. The choice of field coat shall be at the contractor's option.

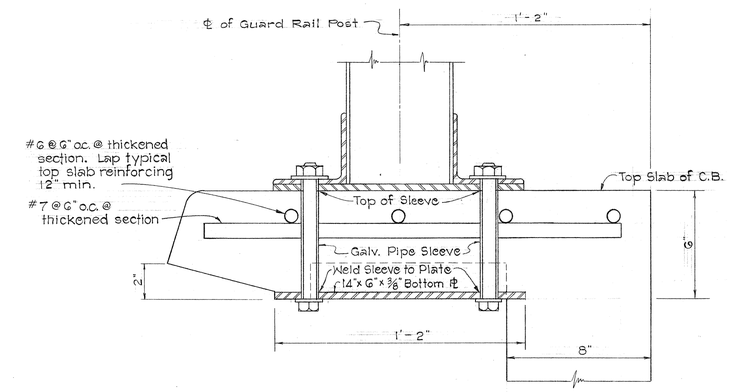

SECTION "E-E"

DETAIL OF BOTTOM PLATE ASSEMBLY FOR GUARD RAIL POST CONNECTION

Scale: 3" = 1'-0"

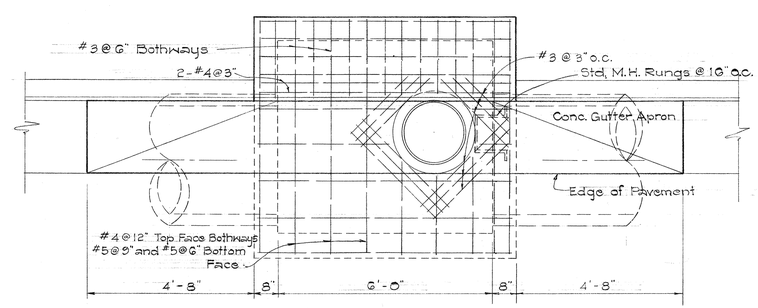

PLAN

CATCH BASIN TYPE "ID"

Scale: 1/2" = 1'-0"

STATE OF HAWAII
DEPARTMENT OF TRANSPORTATION
HIGHWAYS DIVISION

DRAINAGE DETAILS

F.A.I. Proj. No. I-H1-1(5):24, Unit 2

Scale: As shown Date: May, 1965

SHEET No. 2 OF 7 SHEETS

ORIGINAL PLAN		DATE
	SURVEY PLOTTED BY	
	DRAWN BY	
	TRACED BY	
NOTE BOOK	DESIGNED BY	
	QUANTITIES BY	
No.	CHECKED BY	

PRINTED ON NO. 1000H CLEARPRINT

FED. ROAD DIST. NO.	STATE	FED. AID PROJ. NO.	FISCAL YEAR	SHEET NO.	TOTAL SHEETS
HAWAII	HAW.	I-H1-1(5)34 Unit 8	1966	C040S-1	276

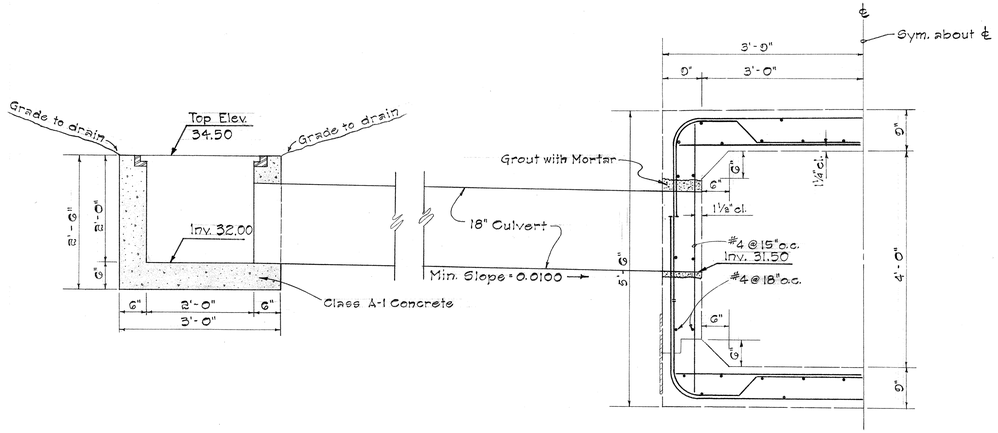

SECTION "A-A"

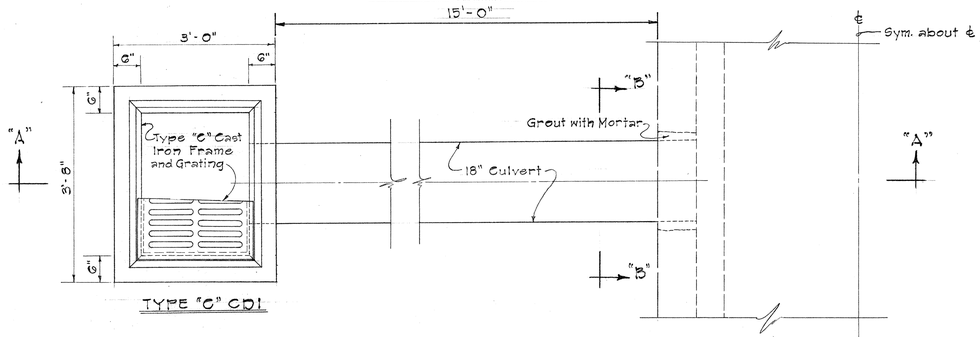

TYPE "C" CDI

PLAN VIEW

EXISTING 6'-0" x 4'-0" CONCRETE BOX CULVERT

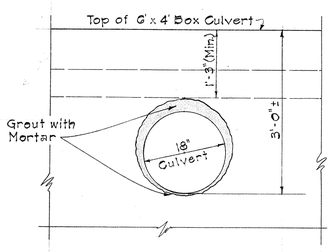

SECTION "B-B"

NOTE:

Construct Type "C" CDI and install Type "C" C.I. Frame and Grate. Install 18" CGMP, ~~16~~ 14 gage from CDI to existing 6'x4' Conc. Box Culvert. Break into Concrete Box Culvert with an opening sufficent to accommodate culvert.

Exact location of CDI and opening in 6'x4' Concrete Box Culvert to be determined in the field by the engineer.

Refer to sheet 43 of the Contract Plans for dimensions to Type "C" C.I. Frame and Grate.

CONNECTION OF TYPE "C" CDI AND 18" CULVERT WITH EXISTING 6'-0" x 4'-0" CONCRETE BOX CULVERT IN THE VICINITY OF RAMP H-K STA. 3+70 ± RIGHT

Scale: 3/4" = 1'-0"

STATE OF HAWAII
DEPARTMENT OF TRANSPORTATION
HIGHWAYS DIVISION

CONNECTION OF TYPE "C" CDI WITH EXISTING 6'-0" x 4'-0" CONCRETE BOX CULVERT

F.A.I. PROJ. No. I-H1-1(5):34 Unit 8

Scale: As Shown — Date: Feb. 1966

CHANGE ORDER No. 23

February 7, 1966

ORIGINAL PLAN	SURVEY PLOTTED BY	DATE
	DRAWN BY	"
	TRACED BY	"
NOTE BOOK	DESIGNED BY	"
	QUANTITIES BY	"
No.	CHECKED BY	"

STATE OF HAWAII
DEPARTMENT OF TRANSPORTATION
HIGHWAYS DIVISION

SHEET No. OF SHEETS

C040S-1

PRINTED ON NO. 1000H CLEARPRINT

2/17/59

FED. ROAD DIST. NO.	STATE	FED. AID PROJ. NO.	FISCAL YEAR	SHEET NO.	TOTAL SHEETS
HAWAII	HAW.	T-HI-H(6-24) Unit 2	1965	41	276

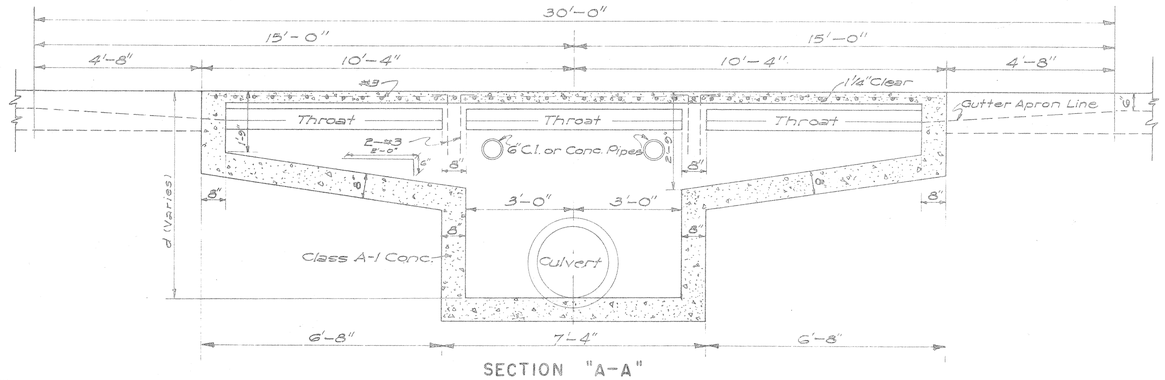

SECTION "A-A"

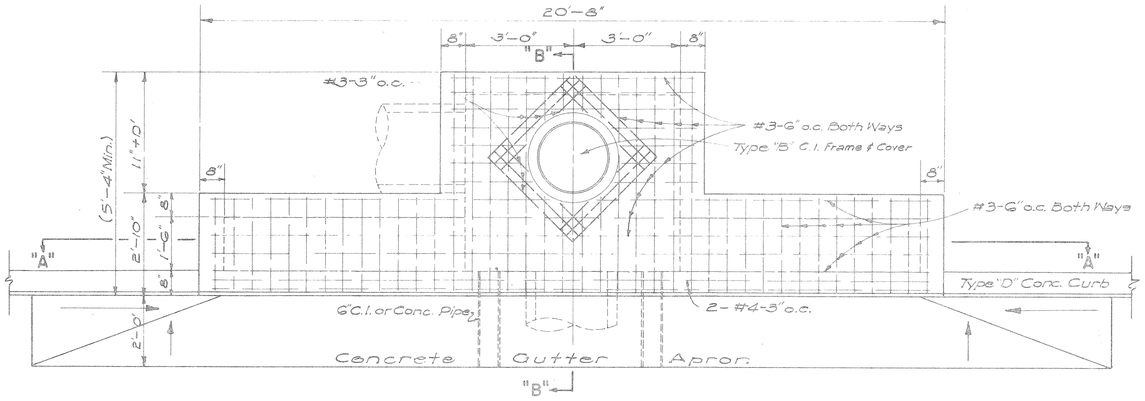

PLAN

DETAIL OF TYPE "A" CATCH BASIN

SCALE: 1/2" = 1'-0"

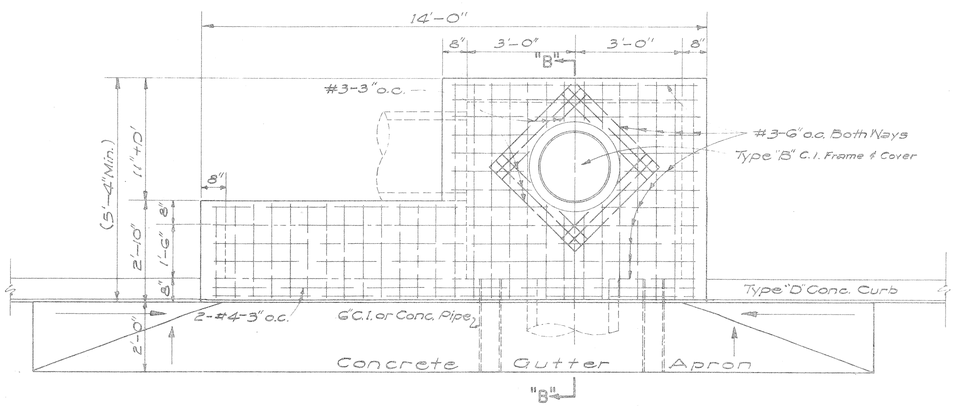

DETAIL OF TYPE "B" CATCH BASIN

SCALE: 1/2" = 1'-0"

NOTE: TYPE "C" C.B. SIMILAR BUT OPPOSITE HAND

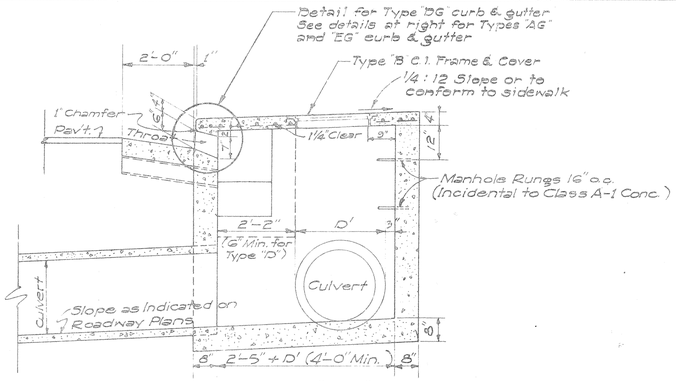

SECTION "B-B"

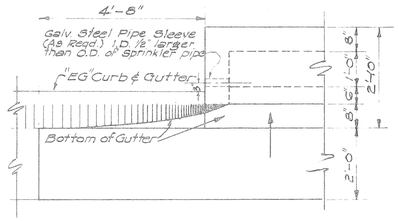

DETAIL OF CATCH BASIN WITH TYPE "EG" CURB & GUTTER

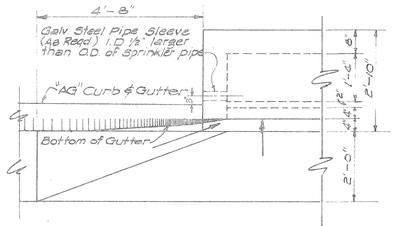

DETAIL OF CATCH BASIN WITH TYPE "AG" CURB & GUTTER

SCALE: 1/2" = 1'-0"

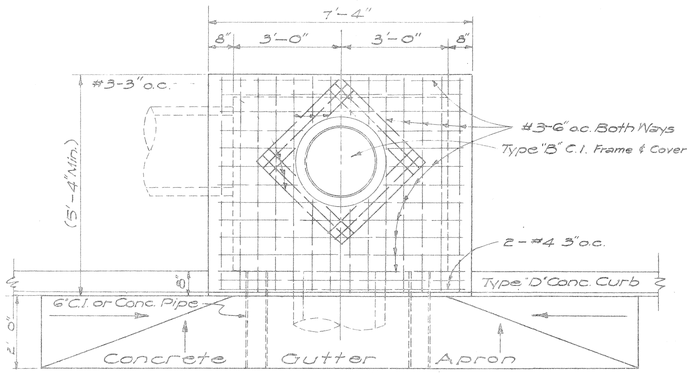

DETAIL OF TYPE "D" CATCH BASIN

SCALE: 1/2" = 1'-0"

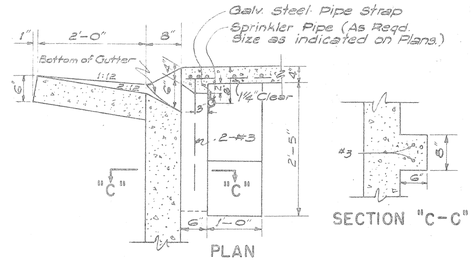

PLAN

SECTION "C-C"

THROAT DETAIL FOR TYPE "EG" CURB & GUTTER

SCALE: 3/4" = 1'-0"

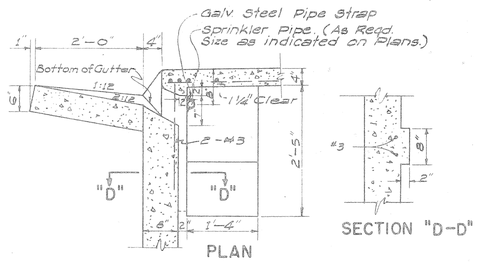

PLAN

SECTION "D-D"

THROAT DETAIL FOR TYPE "AG" CURB & GUTTER

SCALE: 3/4" = 1'-0"

ESTIMATED QUANTITIES

Type	Class A-1 Conc.	Struct. Exc.	Reinf. Steel	Gutter Length
"A"	7.5 c.y.	24.7 c.y.	145 lb.	30'-0"
"B"	6.0 c.y.	21.5 c.y.	108 lb.	23'-4"
"C"	6.0 c.y.	21.5 c.y.	108 lb.	23'-4"
"D"	4.9 c.y.	16.5 c.y.	77 lb.	16'-8"

NOTES:

1. Quantities based on d = 5.75' and D' = 30"
2. Quantities do not include concrete for Gutter Apron.
3. The Contractor shall install two 6" Cast Iron or Concrete Pipes as incidental to Class A-1 Concrete for Construction Drainage.
4. Culvert shall leave C.B. from any position and any direction indicated by plans or ordered by the Engineer. Culvert may both enter and leave C.B. so that C.B. will also act as Manhole.
5. The Contractor shall install Galvanized Steel Pipe Sleeves and Straps as incidental to Sprinkler System.

ORIGINAL PLAN	SURVEY PLOTTED BY	DATE
	DESIGNED BY D.A.	"
	DRAWN BY J.C.	"
NOTE BOOK	TRACED BY	"
	QUANTITIES BY	"
No.	CHECKED BY	"

APPROVED: DATE Aug. 30, 1960

STATE HIGHWAY ENGINEER

STATE OF HAWAII
DEPARTMENT OF TRANSPORTATION
HIGHWAYS DIVISION
STANDARD DETAILS

CATCH BASINS

SCALES AS NOTED

SHEET No 3 OF 7 SHEETS

41

FED. AID DIST. NO.	STATE	FED. AID. PROJECT	FISCAL YEAR	SHEET NO.	TOTAL SHEETS
HAWAII	HAWAII	I-HI-1(5)-24 Unit 2	1965	42	276

NOTE:

1. All welds 3/8" unless otherwise noted.
2. All steel shall be structural grade.
3. Grates and Frame shall be hot dip galvanized after fabrication in accordance with Section 44(H) of the Standard Specifications.

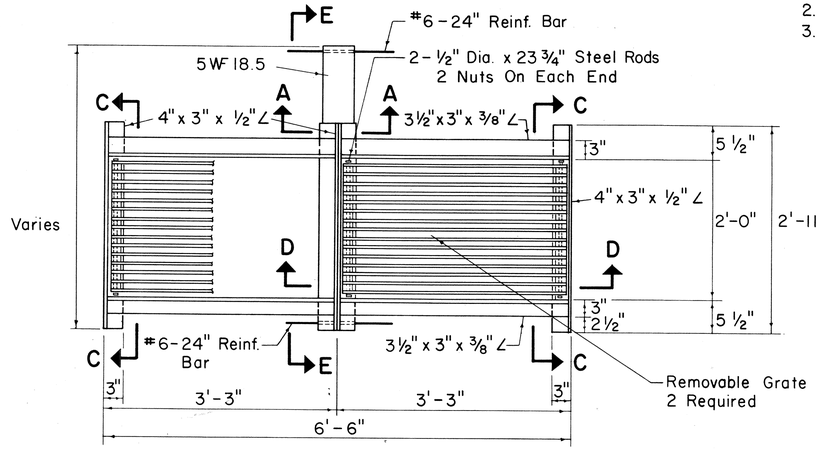

PLAN

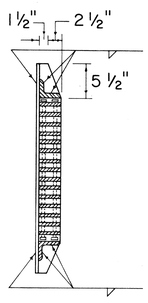

SECTION C-C

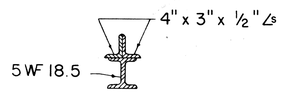

SECTION A-A

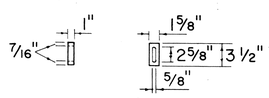

END SPACER

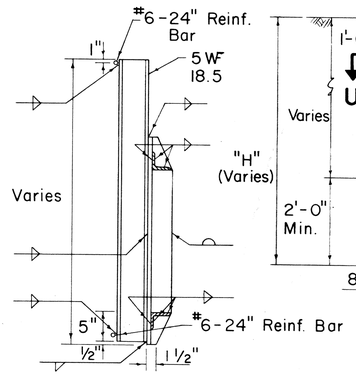

SECTION E-E

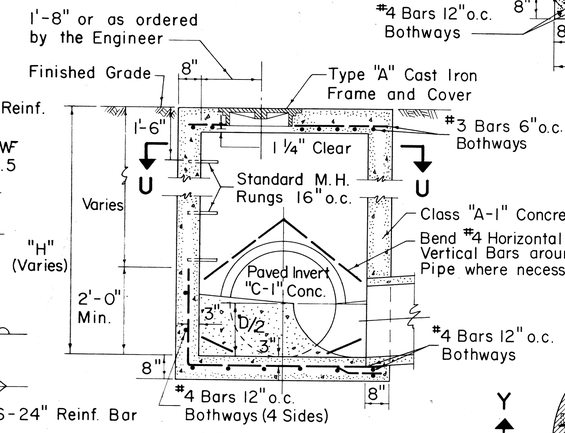

SECTION V-V

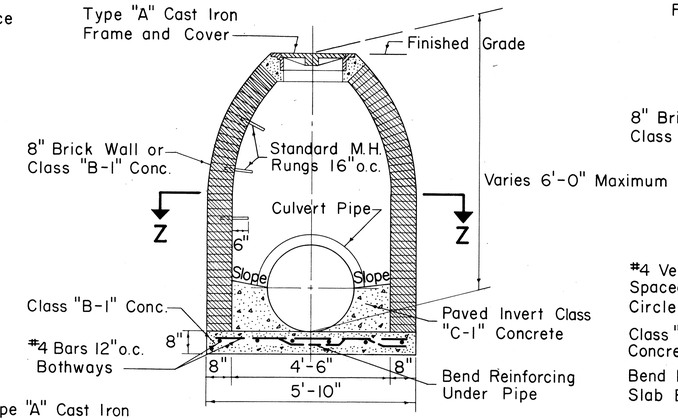

SECTION Y-Y

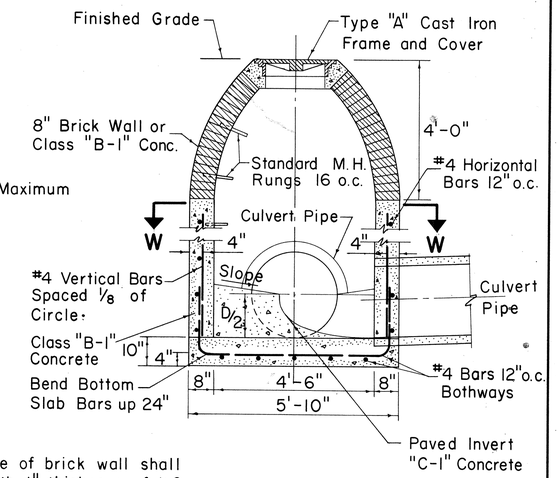

SECTION X-X

NOTE:

1. Exterior surface of brick wall shall be plastered with 1" thickness of 1:2 Cement Mortar.
2. Number size and direction of culvert pipes at manhole to be as shown on plans.
3. Paved invert not required at drop manholes.
4. All Class "C-1" Concrete to be incidental to Class "B-1" Concrete.

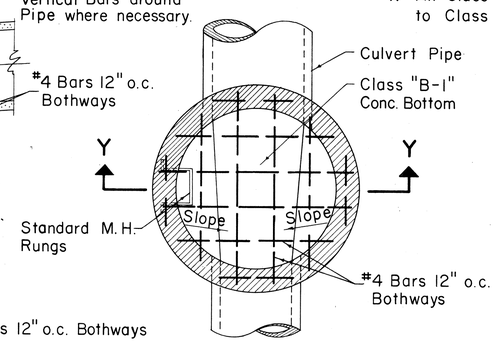

SECTION Z-Z

TYPE "D" STORM DRAIN MANHOLE

Scale: 1/2" = 1'-0"

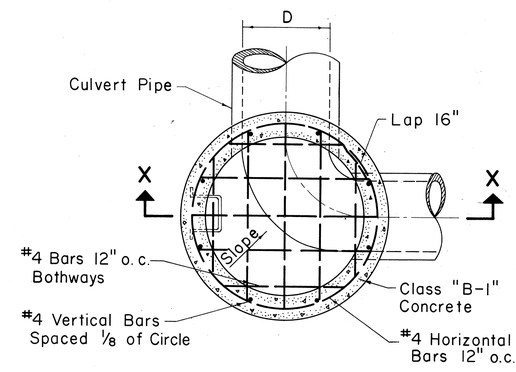

SECTION W-W

TYPE "E" STORM DRAIN MANHOLE

Scale: 1/2" = 1'-0"

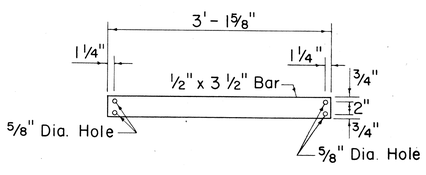

GRATE BARS

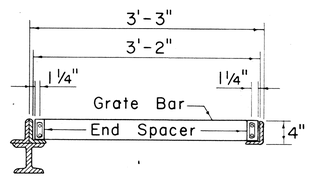

SECTION D-D

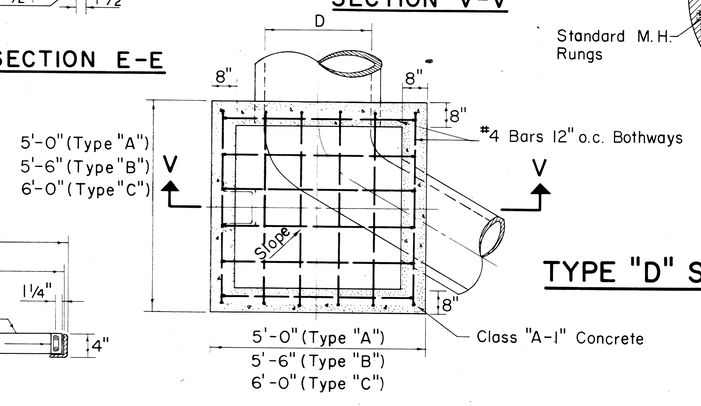

SECTION U-U

TYPE "A", "B", & "C"

S.D.M.H.

Scale: 1/2" = 1'-0"

DETAIL OF TYPE "A" STEEL FRAME AND GRATES

Scale: 1" = 1'-0"

STATE OF HAWAII
DEPARTMENT OF TRANSPORTATION
HIGHWAYS DIVISION

STANDARD DETAILS

STEEL FRAME AND GRATES AND STORM DRAIN MANHOLES

Scales: As Noted — Date: May, 1965

SHEET NO. 4 OF 7 SHEETS

2/17/59
8/14/59

FED. ROAD DIST. NO.	STATE	FED. AID PROJ. NO.	FISCAL YEAR	SHEET NO.	TOTAL SHEETS
HAWAII	HAW.	F-H-I-15(24) UNIT E	1965	43	276

August 1957

NOTE: Stock Pattern From Novelty Foundry ~ Honolulu

TOP VIEW OF COVER

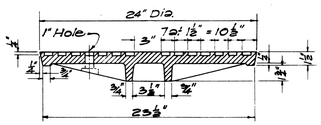

SECTION

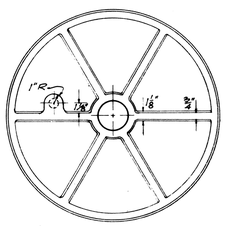

BOTTOM VIEW OF COVER

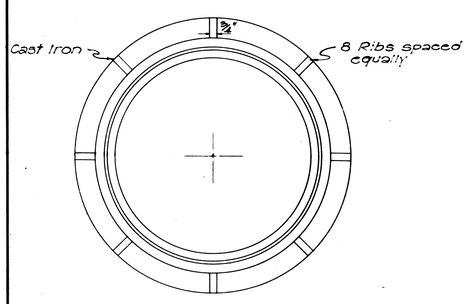

PLAN OF RIM

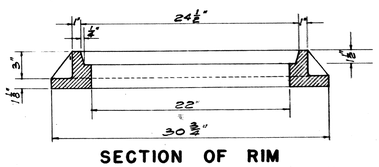

SECTION OF RIM

DETAILS OF TYPE "S" CAST IRON FRAME AND COVER

SCALE: 1-1/2" = 1'-0"

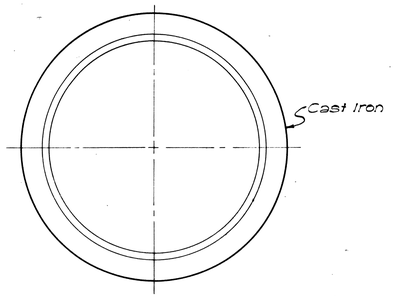

PLAN OF RIM

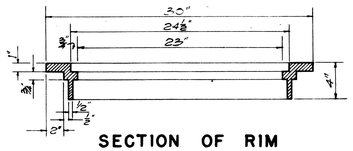

SECTION OF RIM

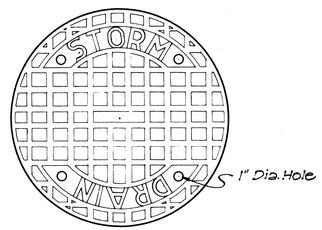

TOP VIEW OF COVER

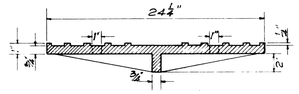

SECTION

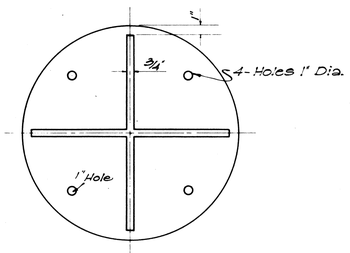

BOTTOM VIEW OF COVER

DETAILS OF TYPE "B" CAST IRON FRAME AND COVER

SCALE: 1-1/2" = 1'-0"

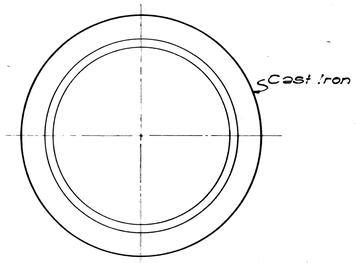

PLAN OF RIM

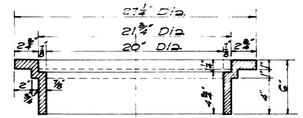

SECTION OF RIM

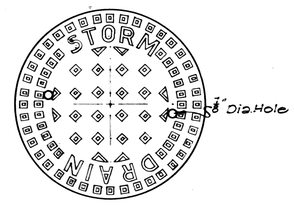

TOP VIEW OF COVER

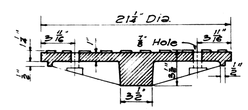

SECTION

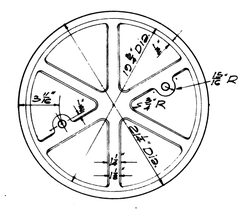

BOTTOM VIEW OF COVER

DETAILS OF TYPE "A" CAST IRON FRAME AND COVER

SCALE: 1-1/2" = 1'-0"

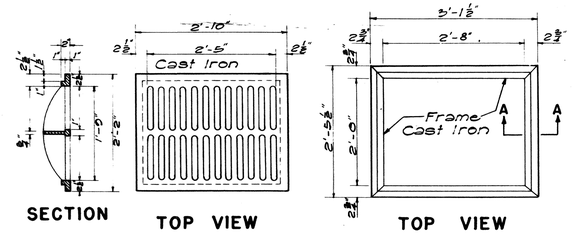

SECTION TOP VIEW TOP VIEW

TYPE C C.I. FRAME AND GRATING

SCALE: 3/4" = 1'-0"

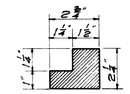

SECTION "A-A"
SCALE 3" = 1'-0"

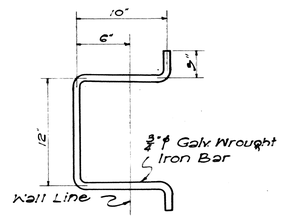

MANHOLE RUNG

SCALE: 1-1/2" = 1'-0"

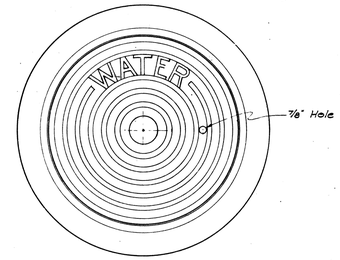

PLAN OF FRAME AND COVER

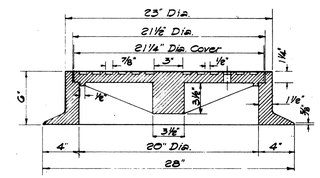

SECTION OF FRAME AND COVER

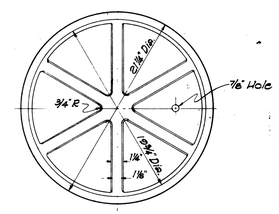

BOTTOM VIEW OF COVER

DETAILS OF TYPE "W" CAST IRON FRAME AND COVER

SCALE: 1-1/2" = 1'-0"

NOTE:

THE TYPE "S" CAST IRON FRAME AND COVER SHOWN ON THIS SHEET IS EQUIVALENT TO THE CITY AND COUNTY OF HONOLULU, DIVISION OF SEWERS' TYPE "A" CAST IRON MANHOLE FRAME AND COVER.

THE TYPE "W" CAST IRON FRAME AND COVER SHOWN ON THIS SHEET IS EQUIVALENT TO THE CITY AND COUNTY OF HONOLULU, BOARD OF WATER SUPPLY'S CAST IRON MANHOLE FRAME AND COVER, 20" SIZE.

STATE OF HAWAII
DEPARTMENT OF TRANSPORTATION
HIGHWAYS DIVISION

STANDARD DETAILS
CATCH BASIN AND MANHOLE CASTINGS

SCALES AS NOTED

SHEET Nº 5 OF 7 SHEETS

43 of 83

ORIGINAL PLAN		DATE
	SURVEY PLOTTED BY	
	DESIGNED BY	" "
	DRAWN BY	" "
	TRACED BY J. Calistro	" "
	QUANTITIES BY	" "
NOTE BOOK	CHECKED BY	" "
No.		

2/17/59

FED. ROAD DIST. NO.	STATE	FED. AID PROJ. NO.	FISCAL YEAR	SHEET NO.	TOTAL SHEETS
HAWAII	HAW.	F-HI-3(9)-24 Unit 2	1965	44	276

AUG. 1957

DATA FOR OUTLET DITCH			
D	W	H	T=W+H
18"	24"	2'-0"	4'-0"
24"	30"	2'-0"	4'-6"
30"	30"	2'-6"	5'-0"
36"	36"	3'-0"	6'-0"

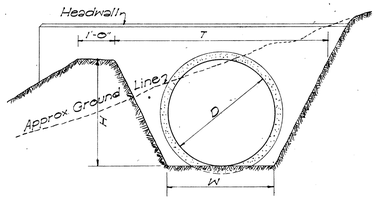

DETAIL OF OUTLET DITCH

Scale: 1/2" = 1'-0"

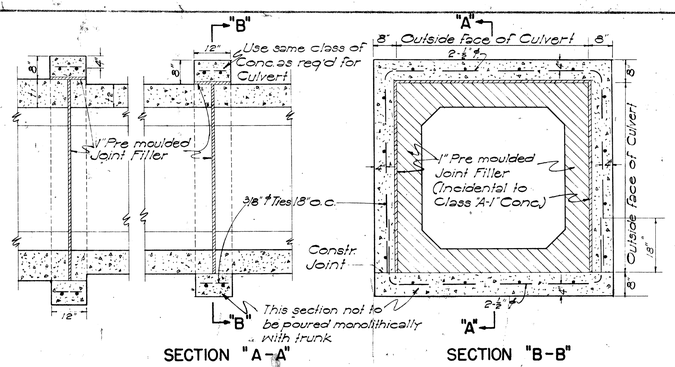

SECTION "A-A" SECTION "B-B"

CONC. COLLAR FOR CONC. BOX CULVERT

Scale: 1/2" = 1'-0"

DATA FOR MASONRY DROP INTAKE				Where Variables Equal
D'	D	L=D'+6"	Cu.Yds.	
23"	18"	2'-5"	3.02	4'-6"
30"	24"	3'-0"	3.61	5'-0"
37"	30"	3'-7"	4.21	5'-6"
44"	36"	4'-2"	4.85	6'-0"

NOTE:
Dimension "X" is assumed as 2'-4" in figuring the above quantities.

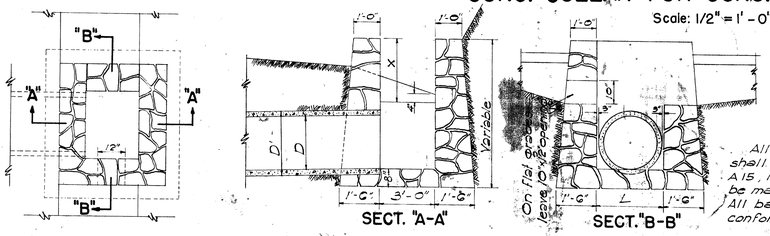

REINFORCING BARS
All reinforcing bars for concrete shall be Billet Steel bars, ASTM A15, intermediate grade. Steel shall be made by the open-hearth process. All bars shall be deformed type conforming to ASTM A-305.

DETAIL OF MASONRY DROP INTAKE

Scale: 3/8" = 1'-0"

Note: To Resident Engineer
1.) Consider economy of reinf. conc. for high retaining walls which did not originate on plan layout.
2.) Elevation of weep holes to be determined by Resident Engineer. Holes to be placed as close to the existing ground line as local conditions permit.

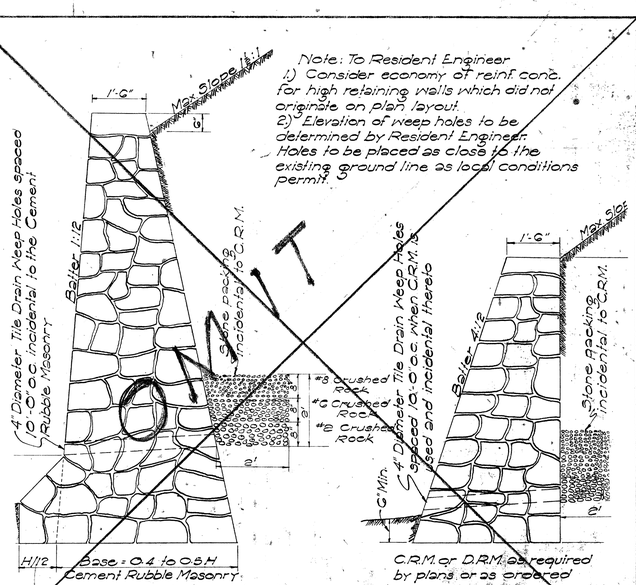

SECTION OF HIGH CEMENT RUBBLE MASONRY RETAINING WALL OR SEAWALL

SECTION OF LOW MASONRY RETAINING WALL OR SEAWALL

DATA-MASONRY HEADWALL				Cast-in-Place Conc. Culv't Cu. Yds.	Conc. Pipe Culv't Cu. Yds.	Corrugated Pipe Culv't Cu. Yds.
D	H	B	L			
18"	3'-6"	1'-9"	6'-0"	0.85	0.95	0.93
24"	4'-0"	2'-0"	7'-6"	1.28	1.45	1.41
30"	4'-6"	2'-3"	9'-0"	1.83	2.06	2.00
36"	5'-0"	2'-6"	10'-6"	2.49	2.84	2.72

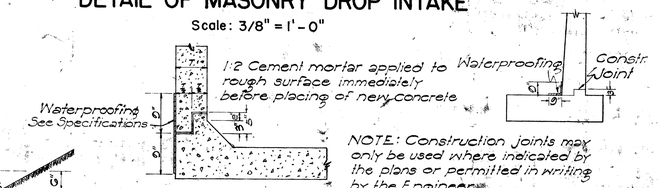

NOTE: Construction joints may only be used where indicated by the plans or permitted in writing by the Engineer.

CONSTR. JOINT DETAILS

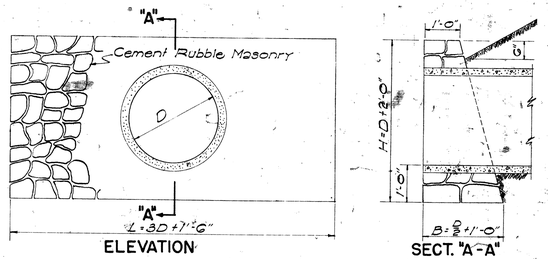

ELEVATION SECT. "A-A"

DETAIL OF MASONRY HEADWALL

Scale: 1/2" = 1'-0"

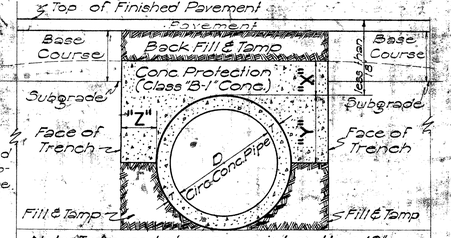

Note: When subgrade is below top of jacket, it shall be fully compacted to this line and then re-excavated (struc. exc.) to proper subgrade. This surface shall be rolled again.

Note: To be used when cover is less than 18"

DATA FOR CONCRETE PROTECTION OVER CULVERTS		
X	Y	Z
6" for 18" D	D/2 + 7	Z must be from pipe to face of trench
7" " 24" D		
8" " 30" D		Minimum = X
9" " 36" D		
10" " 42" D		Maximum pay quantity will be Z = 12"
11" " 48" D		
12" " 54" D		

SECT. OF CULVERT WITH CONC. PROTECTION

Scale: 1" = 1'-0"

DATA - CONC. DROP INTAKE				Where Variable Equals
D'	D	L=D'+6"	B	Cu. Yds.
23"	18"	2'-5"	8"	1.41
30"	24"	3'-0"	8"	1.72
37"	30"	3'-7"	9"	2.32
44"	36"	4'-2"	9"	2.73
51"	42"	4'-9"	10"	3.54
58"	48"	5'-4"	10"	4.01

Note: Dimension "X" is assumed as 2'-4" in figuring the above quantities.

Note: This type of structure shall also be used for the Drop Intakes of Syphons connected with Irrigation Ditches or Flumes with appropriate changes to dimensions. In this case all joints must be made water tight.

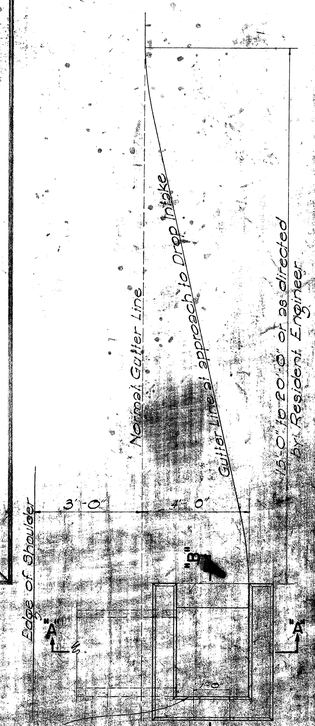

Where drainage comes from both sides over the wall, to same elevation value as shown for opposite wall.

PLAN

Excavate recess in roadway excavation slope for inlet to dimensions and form designated by Engineer. This is "Unclassified Excavation".

Top limits of structure excavation other than at bridges.

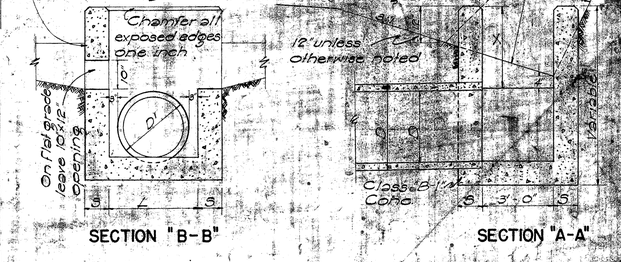

DETAIL OF CONCRETE DROP INTAKE

Scale: 1/2" = 1'-0"

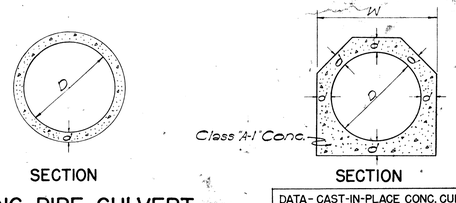

SECTION SECTION

CONC. PIPE CULVERT

NOTE:
Thickness "d", reinforcing and Concrete used, are to conform with the approved design as provided by the Specifications.

DATA - CAST-IN-PLACE CONC. CULV'T			
D	d	W	Cu.Yd. per Ft.
18"	4"	2'-2"	0.11
24"	4½"	2'-9"	0.14
30"	5"	3'-4"	0.19
36"	5½"	3'-11"	0.26

CAST-IN-PLACE CONC. CULVERT

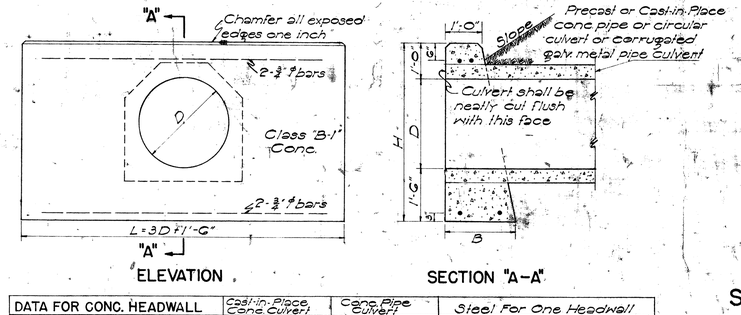

ELEVATION SECTION "A-A"

DATA FOR CONC. HEADWALL				Cast-in-Place Conc. Culvert	Conc. Pipe Culvert	Steel For One Headwall			
D	B	L	H	Cu. Yd.	Cu. Yd.	No. of Bars	Size	Length	Lbs.
18"	1'-6"	6'-0"	4'-0"	0.62	1.00	4	¾" ϕ	5'-6"	33
24"	1'-6"	7'-6"	4'-6"	1.28	1.88	4	¾" ϕ	7'-0"	42
30"	2'-0"	9'-0"	5'-0"	1.95	2.17	4	¾" ϕ	8'-6"	51
36"	2'-0"	10'-6"	5'-6"	2.45	2.74	4	¾" ϕ	10'-0"	60
42"	2'-6"	12'-0"	6'-0"		3.87	4	¾" ϕ	11'-6"	69
48"	2'-6"	13'-6"	6'-6"		4.66	4	¾" ϕ	13'-0"	78

DETAIL OF CONCRETE HEADWALL

Scale: 1/2" = 1'-0"

ORIGINAL PLAN	SURVEY PLOTTED BY	DATE
	DESIGNED BY	
	TRACED BY	
	DRAWN BY	
	QUANTITIES TAKEN BY	
	CHECKED BY	
NOTE BOOK		
No.		

APPROVED: DATE Aug. 26, 1959

STATE HIGHWAY ENGINEER

DEPARTMENT OF TRANSPORTATION
DIVISION OF HIGHWAYS
STATE OF HAWAII

STANDARD DETAILS

DROP INTAKES, RETAINING WALLS, HEADWALLS, CONSTRUCTION JOINTS

SCALES AS NOTED

SHEET No. 6 OF 7 SHEETS

DRAINAGE SUMMARY

STATE OF HAWAII
DEPARTMENT OF TRANSPORTATION
HIGHWAYS DIVISION

DRAINAGE SUMMARY

F.A.I. Proj. No. I-H1-1(5):24, Unit 2

Date: May 1965

FED. ROAD DIST. NO.	STATE	FED. AID PROJ. NO.	FISCAL YEAR	SHEET NO.	TOTAL SHEETS
HAWAII	HAW.	F.H.P.-I-H1-1(5)24 Unit 2	1965	45A	276

Revised: July 16, 1965
Revised: Jan. 9, 1967

STRUCTURES				PIPE CULVERTS				ESTIMATED QUANTITIES									ALTERNATES								NO ALTERNATE		REMARKS
																	REINF. CONC. CULV'T. PIPES (Length in lineal feet)				CORR. GALV. METAL PIPES (Length in lineal feet)		RCCP or CGMP (Length in lineal ft.)				
NUMBER	TYPE	STATION	FLOOR INVERT	FROM	TO	INLET ELEV.	OUTLET ELEV.	Cl. "A-1" Conc. C.Y.	Cl. "B-1" Conc. C.Y.	Reinf. Steel Lbs.	Struct. Exc. C.Y.	Brick Wall for SDMH L.F.	Type "A" C.I. Frame & Cover Ea.	Type "B" C.I. Frame & Cover Ea.	Salvaged Type "B" C.I. Frame & Cover Ea.		~~18" Cl. III~~	~~18" Cl. IV~~	~~24" Cl. III~~	~~24" Cl. IV~~	18" (14 ga.)	24" (14 ga.)	24" Cl. III RCCP	18" (14 ga.) CGMP			
CB #1	B	I.B. ℄ 27+00	22.2	CB #1	CRM Ditch	22.2	11.4 ±	4.7 ~~5.0~~		110.7 ~~108~~	7.3 ~~12~~				1				22			19 ~~22~~					
CB #2	B	I.B. ℄ 29+00	17.71	CB #2	CRM Ditch	17.71	10.5 ±	5.2 ~~5.6~~		110.7 ~~108~~	9.5 ~~13~~				1				20			18 ~~20~~					
CB #3	B	I.B. ℄ 31+00						0.5			5																
CB #4	D	I.B. ℄ 33+61	11.9					4.86 ~~4.5~~		83.47 ~~77~~	10.7 ~~12~~				1												
CB #5	~~B~~ B	~~O.B. ℄ 34+00~~ 34+20	~~13.3~~ 13.8	CB #5	CB #4	13.8 ~~13.2~~	12.9 ~~11.9~~	~~4.4~~ ~~4.3~~ 4.55		~~108~~ ~~77~~ 112.37	~~49~~ ~~52~~ 2.90				1				~~69~~			~~89~~ ~~69~~ 86					
CB #6	IC	I.B. ℄ 36+50	~~16.1~~ 16.9	CB #6	CB #7	16.9 ~~16.1~~	15.6 ~~15.8~~	~~3.6~~ ~~5.4~~ 4.55		~~324~~ 28.23	~~46~~ ~~107~~ 3.38		+						~~143~~			~~74~~ ~~143~~ 77					
CB #7	~~IB~~ C	~~O.B. ℄ 35+50~~ 36+00	~~15.9~~ 15.8	CB #7	SDMH #27 ~~CB #5~~	15.8 ~~15.9~~	15.2 ~~13.5~~	~~4.4~~ ~~5.4~~ 4.55		~~108~~ ~~324~~ 112.37	~~49~~ ~~121~~ 3.28		+						~~152~~			~~64~~ ~~152~~ 67					
CB #8	D	(WL-I) 8+00	24.5	CB #8	Manoa Paloio Canal Struct. #2	24.5	20.9	3.9 ~~4.3~~		117.6 ~~77~~	9.5 ~~72~~			1						~~116~~		112.6 ~~116~~					
CB #8A	D	(WL-I) 7+00	27.9	CB #8A	CB #8	27.9	24.5	3.8 ~~3.9~~		117.6 ~~77~~	10.6 ~~62~~			1						~~99~~		100.5 ~~99~~					
CB #9	~~B~~ C	(WL-O) 7+75	20.5	CB #9	SDMH #26	20.5	20.9	~~4.5~~ ~~3.4~~ 3.2		~~108~~ ~~77~~ 112.4	~~30~~ 0			1					~~34~~			32 ~~34~~					
CDI #10	Standard	(T-1) 12+72	25.75	CDI #10	SDMH #13	25.75	25.24		1.6 ~~1.6~~		3.5 ~~26~~							~~48~~			43.8 ~~48~~						Also CDI To Culvert "HR" Station 4+25± 20
CB #11	B	(T-K) 0+50	24.2	CB #11	SDMH #12	24.2	Existing	3.8 ~~4.4~~		110.7 ~~108~~	10.2 ~~71~~			1	+		~~105~~				100.8 ~~105~~						
SDMH #12	Special	"SK" 16+03						1.1 ~~1.2~~		46.8 ~~108~~	2.6		1														
SDMH #13	D	(T-1) 13+21	25.24						0.7 ~~1.0~~	31.5 ~~31~~	8.7 ~~9~~	4	1														
CB #14	IC	(WL-I) 11+40.03	34.5	CB #14	Manoa-Paloio Canal Struc. #2	34.7	33.4	(Part of Ret Wall)			12		1						~~23~~			25.2 ~~23~~					
CB #15	IB	(WL-O) 11+36	33.4	CB #15	Existing SDMH	33.4	26.2±	6.8 ~~6.0~~		226.1 ~~324~~	13.2 ~~9~~		+		1				~~14~~			10.6 ~~14~~					
CB #16	B	I.B. ℄ 43+50	44.9	CB #16	CB #15	44.9	33.4	5.8 ~~3.4~~		108	6.1 ~~134~~			1					~~217~~			218 ~~217~~					
CB #17	Special	(H1-O) 19+75	47.9	CB #17	CB #16	47.9	44.9				85									~~139~~		138.7 ~~139~~					
CB #18	B	I.B. ℄ 45+50	55.9	CB #18	CB #16	55.9	44.9	5.0		108	5.7 ~~56~~			1										195 ~~194~~			
CB #19	D	"HA" 11+65	26.4	CB #19	Existing SDMH	26.4	25.9	3.0 ~~3.6~~		112.4 ~~77~~	10.5 ~~65~~			1					~~75~~			~~75~~					
CB #20	B	"KB" 25+58	28.52	CB #20	Existing Box Culvert			5.4 ~~5.3~~		110.7 ~~108~~	15.7 ~~25~~			1													
CB #21	B	"KA" 18+45	30.9	CB #21	Existing SDMH	30.9	28.41	5.2 ~~5.3~~		110.7 ~~108~~	16.3 ~~31~~			1					~~17~~			16 ~~17~~					
CB #22	A	"KA" 18+78	30.9	CB #22	Existing SDMH	30.9	29.1	6.0 ~~6.2~~		146.6 ~~145~~	17.2 ~~35~~			1					~~18~~			18					
CB #23	A	"FA" 0+67	31.9	CB #23	Existing SDMH	31.9	30.9	8.2 ~~8.7~~		146.6 ~~145~~	26.9 ~~60~~			1					~~23~~			20 ~~23~~					
CB #24	B	"HA" 19+55	32.9	CB #24	Existing SDMH	32.9	29.23	8.1 ~~8.0~~		110.7 ~~108~~	34.4 ~~122~~			1					~~46~~			18 ~~46~~					
CB #25	A	"HA" 20+85	45.5	CB #25	Existing SDMH	45.5	38.5	6.4 ~~6.2~~		149.2 ~~145~~	31.4 ~~130~~			1					~~118~~			112.7 ~~118~~					
SDMH #26	D	O.B. ℄ 38+00	20.9	SDMH #26	Manoa Paloio Canal Struct. #2	20.9	18.9		0.7 ~~1.0~~	31.5 ~~31~~	5.4 ~~123~~	4.3 ~~5~~	1						~~188~~			189.2 ~~188~~					
Existing SDMH		"HA" 19+29		Existing SDMH	CB #24			1.4 ~~0.7~~		50.2 ~~30~~	21				1				~~16~~			18 ~~16~~					
				Existing RCCP	CB #1						~~64~~													16 ~~13~~			
				Existing RCCP	CB #2						3													6 ~~16~~			
SDMH #27	D	O.B. ℄ 35+50	15.9	SDMH #27	CB #5	15.9	13.8	5.25 ~~4.4~~	0.7	32.7 ~~32~~	~~67~~ 3.1	3.6 ~~4~~	1									125.8 ~~132~~					
CB #3A	B	O.B. ℄ 33+25	14.8	CB #3A	CB #4	14.8	12.8			~~108~~ 112.37	~~49~~ 7.02				1							~~68~~ 66.2					
Existing SDMH		"SK" 17+40						Adjust M.H. Frame & Cover to match finish pavement grade.																			
Existing SDMH		(WL-O) 11+36						2.2		41.4 ~~70~~					1												

SHEET No 7 OF 7 SHEETS

C.O. 45A

ORIGINAL PLAN | SURVEY PLOTTED BY | DRAWN BY | TRACED BY | DESIGNED BY | QUANTITIES BY | CHECKED BY | DATE | NOTE BOOK | No.

120 IN-FILL TRACING CLOTH 10-62

FED. ROAD DIST. NO.	STATE	FED. AID PROJ. NO.	FISCAL YEAR	SHEET NO.	TOTAL SHEETS
HAWAII	HAW.	I-HI-1(5)24 Unit 2	1965	46	276

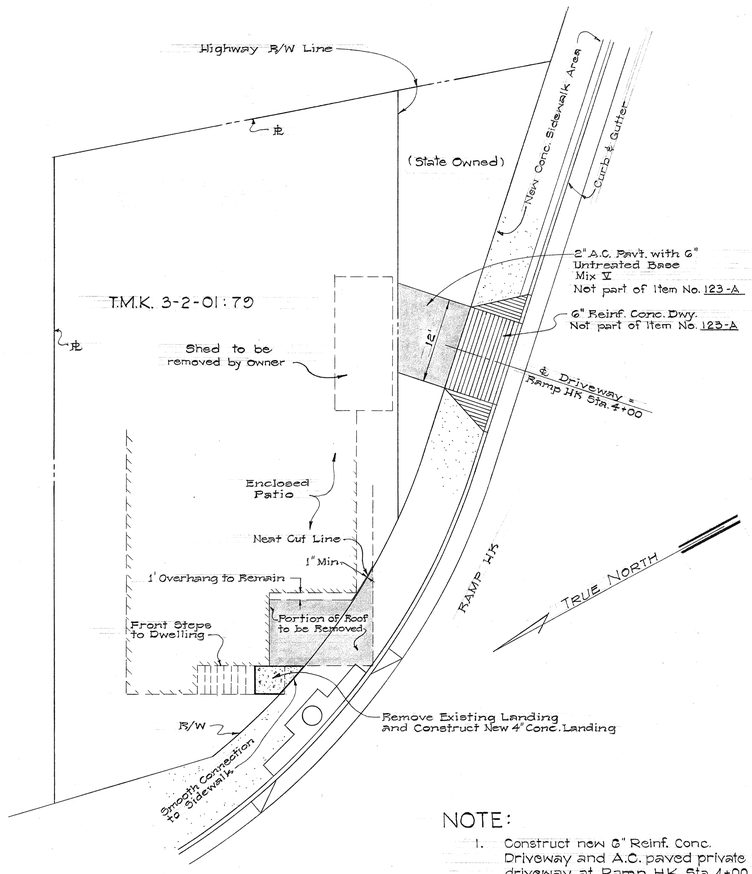

PLAN
Scale: 1" = 10'

NOTE:

1. Construct new 6" Reinf. Conc. Driveway and A.C. paved private driveway at Ramp HK Sta. 4+00 as shown. Paid for under applicable Contract Items.
2. Portion of existing garage roof to be removed only after the construction of the new Driveway is completed. Paid for under Item No. 123-A.
3. Remove existing conc. landing and construct new 4" Plain conc. landing to shape shown. Paid for under Item No. 123-A.

ITEM No. 123-A

REHABILITATION OF LOT
TAX MAP KEY 3-2-01:79
AT 1113 KAPAHULU AVE.
OWNER: CARRIE KEKAHIO

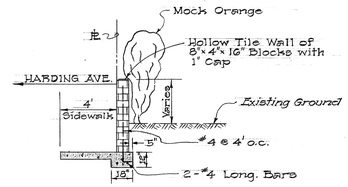

SECTION "A-A"
Scale: 1" = 5'

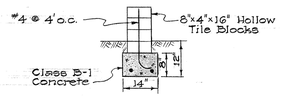

TYPICAL SECTION OF FOOTING DETAIL FOR WALLS W-8C & W-8D
Scale: ½" = 1'-0"

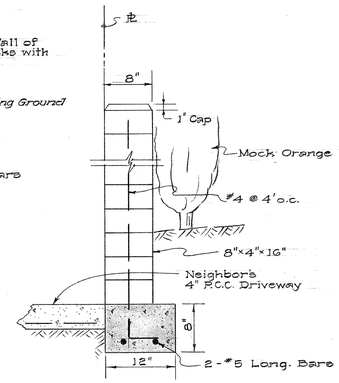

TYPICAL SECTION OF FOOTING DETAIL FOR WALL NO. W-8B
Scale: 1" = 1'-0"

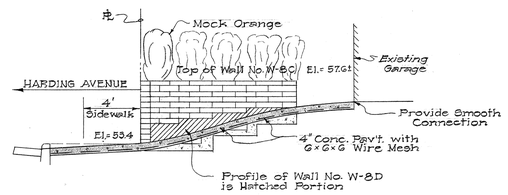

DRIVEWAY PROFILE
Scale: 1" = 5'

NOTE:

1. Remove existing conc. driveway slab and construct 4" Reinf. Conc. Private Driveway.
2. Remove existing hollow tile wall and construct new Hollow Tile Wall Nos. W-8A, W-8B, W-8C, W-8D, & W-8E.
3. During removal operation of existing hollow tile wall, Contractor shall provide sheathing or devise a suitable method to prevent erosion and damage to the Mock Orange plants. Plants damaged or uprooted during wall construction that do not survive after 2 months after replanting shall be replaced in kind & size by the Contractor at his own expense. Sheathing to be incidental to Contract Item No. 119, Hollow Tile Wall.
4. Provide smooth connection to existing conc. walk.
5. Remove a portion of wire fence & posts where shown and provide new matching end post embedded in conc. (Incidental to Contract Item No. 119, Hollow Tile Wall.)
6. Area within property damaged during construction shall be restored to near original as possible.
7. All work involved shall be paid for under applicable Contract Items, except where otherwise noted.

REHABILITATION OF LOT
TAX MAP KEY 3-2-01:42
AT 3040 HARDING AVE.
OWNER: MR. & MRS. YOSHIJI YANAGIHARA

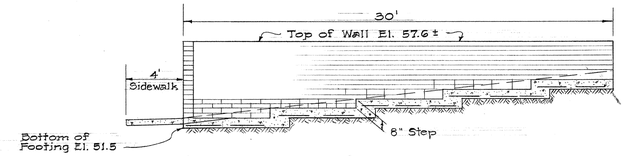

PROFILE OF WALL NO. W-8B
Scale: 1" = 5'

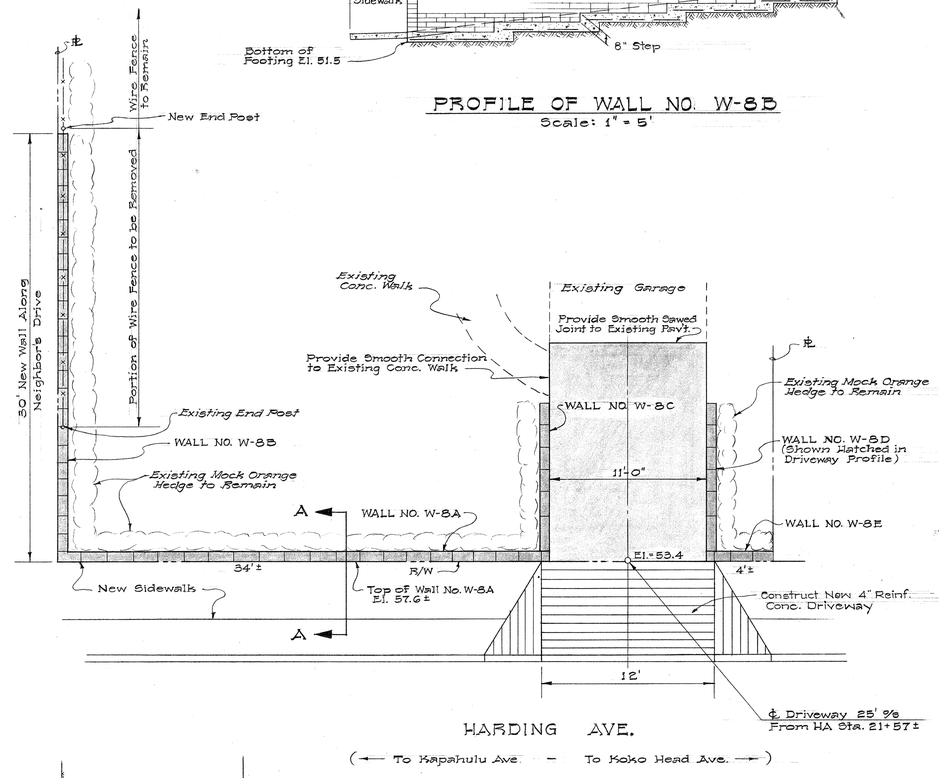

PLAN
Scale: 1" = 5'

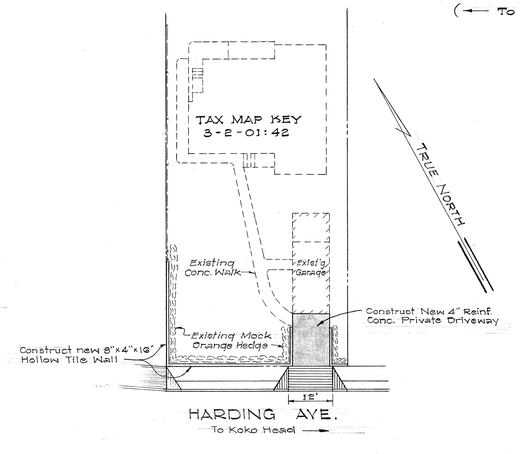

PLOT PLAN
Scale: 1" = 20'

STATE OF HAWAII
DEPARTMENT OF TRANSPORTATION
HIGHWAYS DIVISION

REHABILITATION OF LOTS
TAX MAP KEYS: 3-2-01:42
3-2-01:79

F.A.I. Proj. No. I-HI-1(5):24 Unit 2

Scale: As Shown — Date: May, 1965.

SHEET No. 1 OF 7 SHEETS

ORIGINAL PLAN	SURVEY PLOTTED BY	DATE
	DRAWN BY	"
	TRACED BY	"
NOTE BOOK	DESIGNED BY	"
No.	QUANTITIES BY	"
	CHECKED BY	"

PRINTED ON NO. 1000H CLEARPRINT

46 (6)

FED. ROAD DIST. NO.	STATE	FED. AID PROJ. NO.	FISCAL YEAR	SHEET NO.	TOTAL SHEETS
HAWAII	HAW.	I-H1-1(5)24 Unit 2	1965	47	276

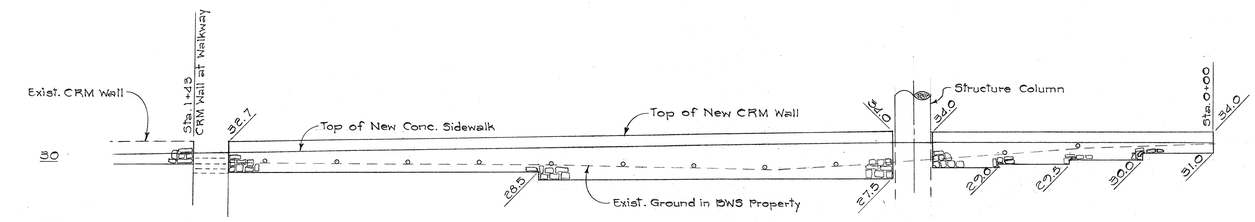

ELEVATION VIEW OF CRM WALL No. BW-1 AT B.W.S. PUMPING STATION
(Viewed from Back Face)
Scale: 1" = 10'-0"

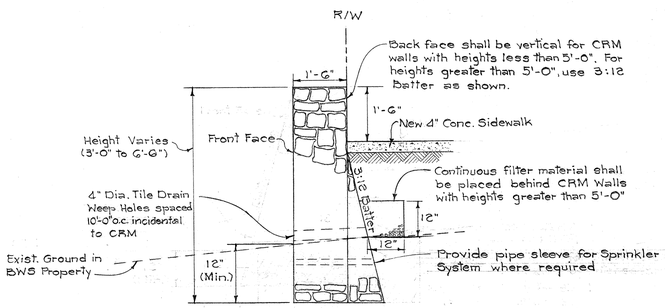

SECTION OF CRM WALL
Scale: 1/2" = 1'-0"

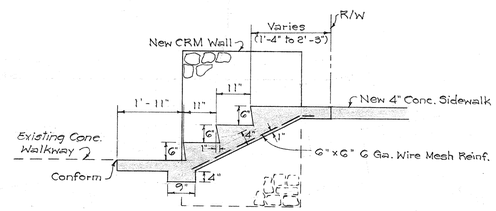

SECTION A-A
Scale: 1/2" = 1'-0"

SCOPE OF WORK

The work of rehabilitating the B.W.S. Kapahulu Pumping Station shall consist of the following:

1. Construct new CRM Wall No. BW-1 and concrete steps along new R/W. Materials and construction shall match existing CRM Wall.
2. Rehabilitate the landscaping including the following:
   (a) Remove and transplant coconut trees as shown on the plans or as directed by the Engineer.
   (b) All existing sodding and plants (such as the honeysuckle and ficus repens) shall be restored to original condition or equal if disturbed by the construction of walls, footings and utility adjustments.
3. Rehabilitate the Sprinkler System as shown on the plans, including the following:
   (a) Relocate existing valve box in new sidewalk area.
   (b) Salvaged sprinkler heads and valves; if not required for rehabilitation shall be returned to Board of Water Supply.
4. Relocate Floodlights as shown on the plans using new conduit and wiring for the electrical circuit. Electrical cables shall be No. 12 AWG and installed in 3/4" conduits conforming to Article 346 of the National Electric Code.
5. Remove all debris resulting from this item of work at end of each work day. No burning of rubbish shall be allowed on job site.
6. All work involved shall be paid for under Item No. 123-B.

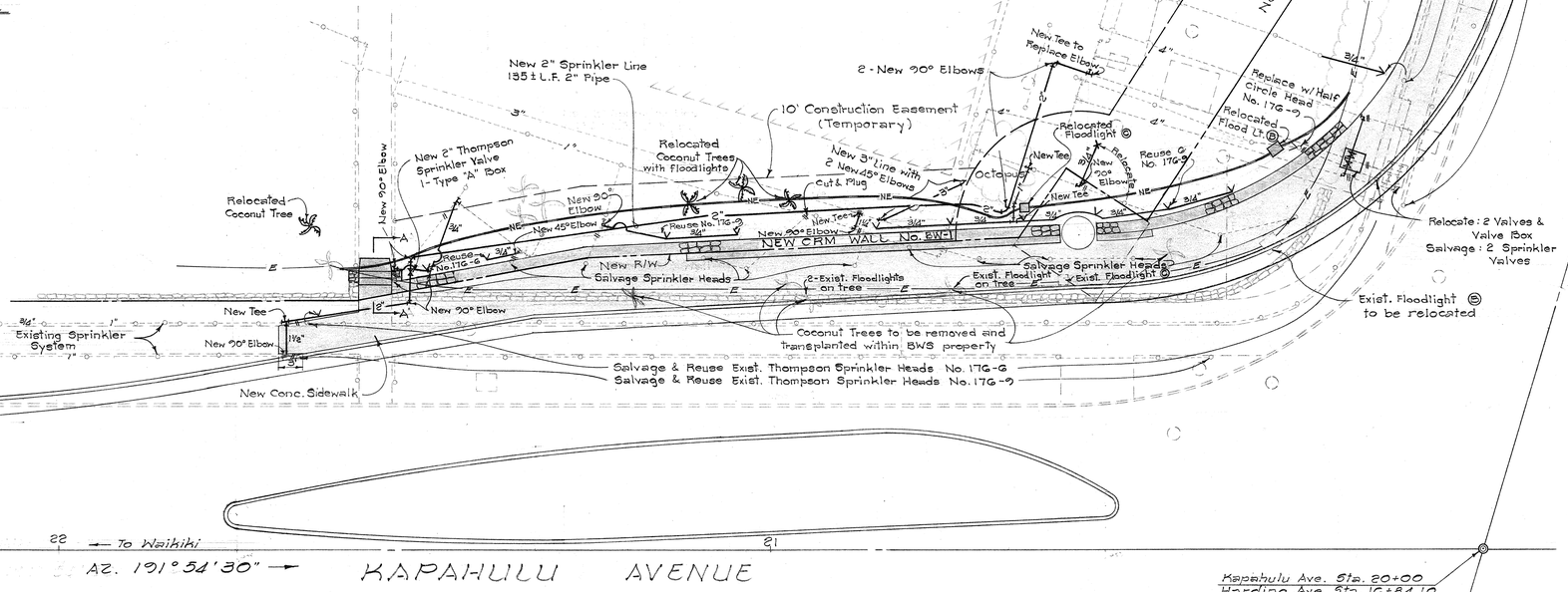

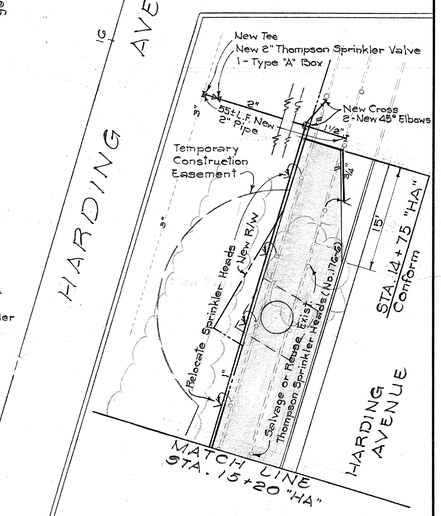

INSET A

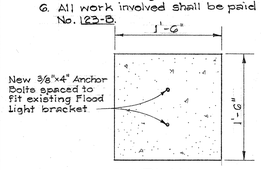

PLAN

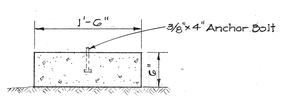

SECTION

TYPICAL CONC. BASE DETAIL FOR FLOOD LIGHT Ⓔ
Scale: 1" = 1'-0"

SPRINKLER LEGEND

- Existing Lines
- New Lines
- Cut Existing Lines
- Existing Sprinkler Head
- Half-Circle Sprinkler Head
- Full Circle Sprinkler Head

ELECTRICAL LEGEND

- E — Existing electric conduits for floodlights
- NE — New electric conduits for floodlights

ITEM No. 123 B

STATE OF HAWAII
DEPARTMENT OF TRANSPORTATION
HIGHWAYS DIVISION

REHABILITATION OF LOT
TAX KEY: 2-7-30:12 (B.W.S.)
KAPAHULU PUMPING STATION

F.A.I. Proj. No. I-H1-1(5):24, Unit 2

Scale: As Shown — Date: May, 1964.

SHEET No. 2 OF 7 SHEETS

ORIGINAL PLAN		
	SURVEY PLOTTED BY	DATE
	DRAWN BY	"
	TRACED BY	"
	DESIGNED BY	"
NOTE BOOK	QUANTITIES BY	"
No.	CHECKED BY	"

PRINTED ON CLEARPRINT 1000-H

47

FED. ROAD DIST. NO.	STATE	FED. AID PROJ. NO.	FISCAL YEAR	SHEET NO.	TOTAL SHEETS
HAWAII	HAW.	I-H1-1(5)-24 Unit 2	1965	48	276

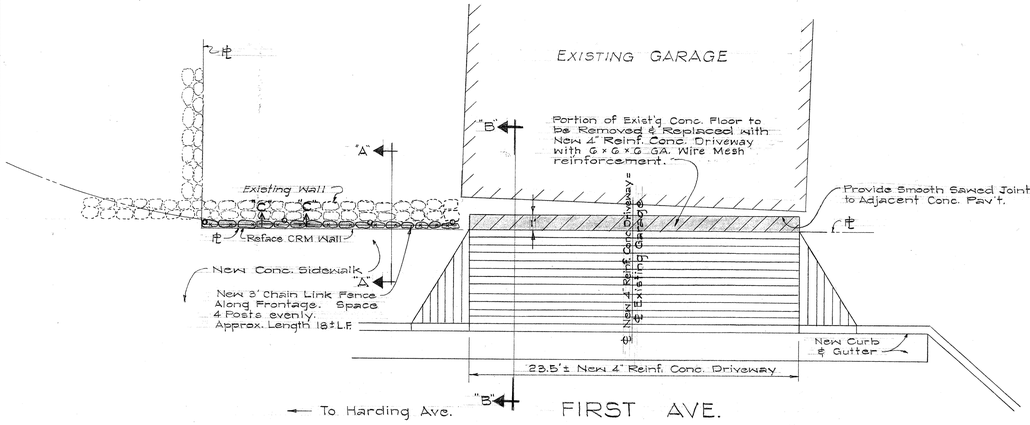

PLAN
Scale: 1" = 5'

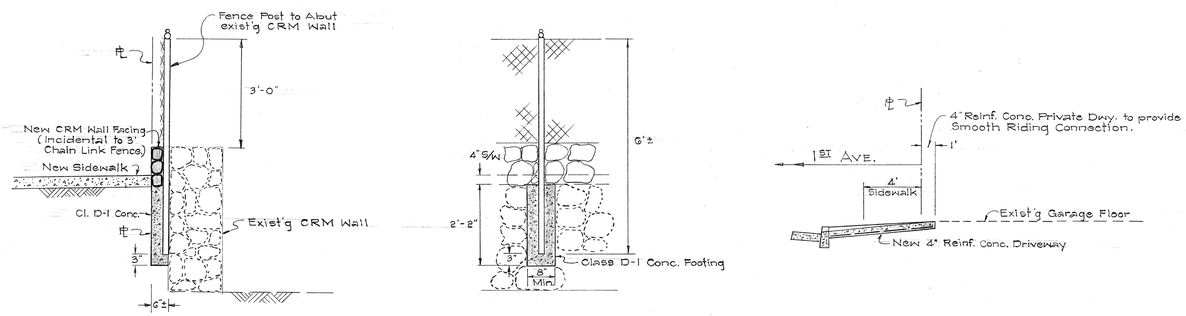

SECTION "A-A" SECTION "C-C" SECTION "B-B"
Scale: 1" = 5'

DETAIL OF 3' CHAIN LINK FENCE FOOTING
Scale: 1/2" = 1'-0"

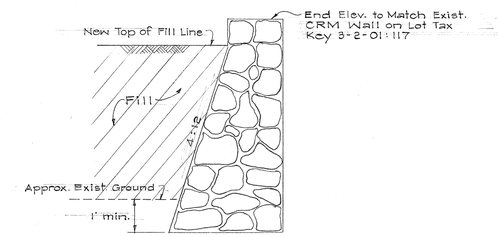

SECTION "A-A"
Scale: 1/2" = 1'-0"

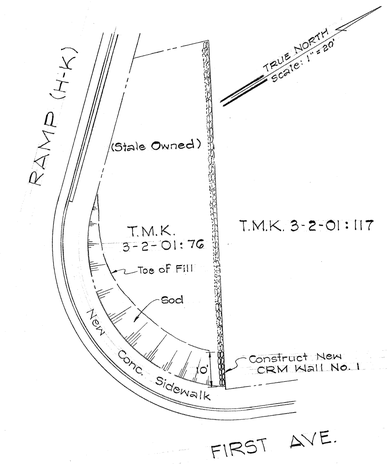

NOTES

1. Construct CRM Wall at location shown.
2. New lumber shall be of construction grade and treated with 2 coats of matching paint.
3. Provide temporary barricade along sidewalk until fill is completed.
4. Sod fill slope.
5. All work involved shall be paid for separately under applicable Contract Items unless otherwise noted.

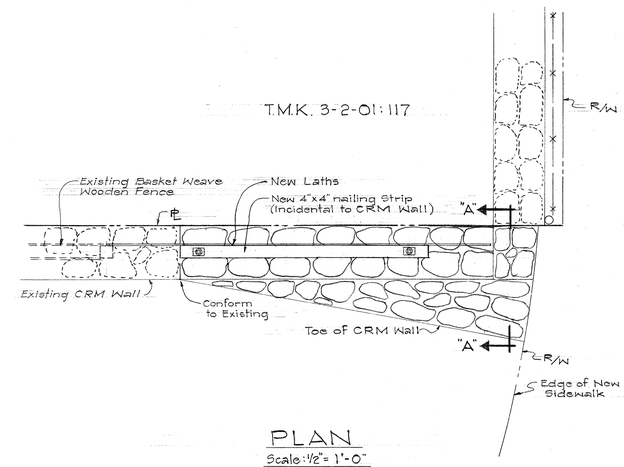

PLAN
Scale: 1/2" = 1'-0"

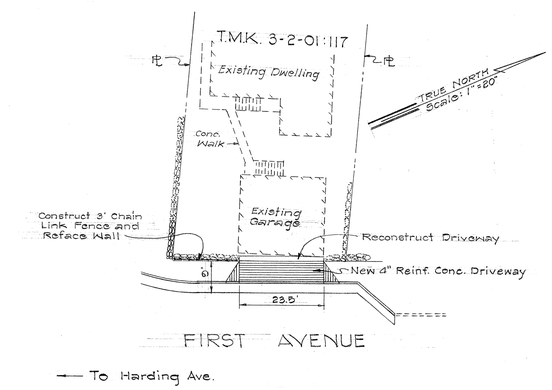

PLOT PLAN

NOTES

1. Remove shaded portion of existing private driveway and reconstruct new 4" reinf. conc. private driveway to conform to new driveway and existing conc. garage floor. Removal of existing driveway shall be incidental to new driveway.
2. Remove existing Mock Orange hedge along front property line South of garage.
3. Construct 3' Chain Link Fence at location shown and in accordance to Section 88 of The Standard Specifications.
4. Reface CRM Wall along front property line South of garage.
5. Provide barricade after working hours at area where Mock Orange hedge has been removed until new 3' Chain Link Fence is erected.
6. All work involved shall be paid for separately under applicable Contract Items unless otherwise noted.

REHABILITATION OF LOT
TAX MAP KEY 3-2-01:117
AT 1112 FIRST AVE.
OWNERS: MR. & MRS. SHIGERU FURUTA

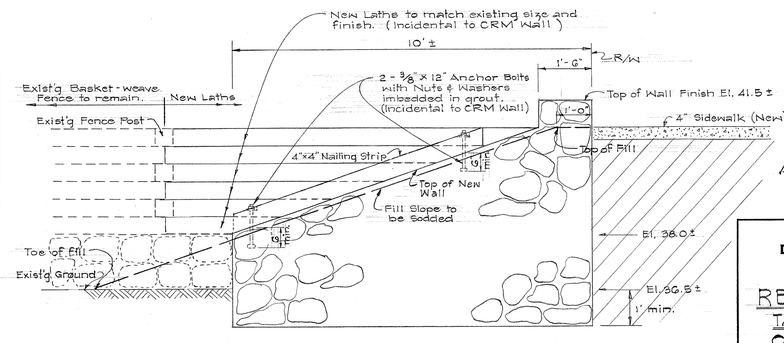

ELEVATION
Scale: 1/2" = 1'-0"

CONSTRUCTION OF
CRM WALL No. 1 WITHIN R/W
AT CORNER OF FIRST AVE. & RAMP (H-K)
OWNER: STATE OF HAWAII

STATE OF HAWAII
DEPARTMENT OF TRANSPORTATION
HIGHWAYS DIVISION

REHABILITATION OF LOT
TAX MAP KEY: 3-2-01:117
CONSTRUCTION OF CRM WALL
No. 1 WITHIN R/W

F.A.I. Proj. No. I-H1-1(5):24, Unit 2

Scale: As Shown Date: May, 1964

SHEET No. 3 OF 7 SHEETS

ORIGINAL PLAN	SURVEY PLOTTED BY	DATE
	DRAWN BY	
	TRACED BY	
	DESIGNED BY	
NOTE BOOK	QUANTITIES BY	
No.	CHECKED BY	

48

FED. ROAD DIST. NO.	STATE	FED. AID PROJ. NO.	FISCAL YEAR	SHEET NO.	TOTAL SHEETS
HAWAII	HAW.	I-H1-1(5)24 Unit 2	1965	40	276

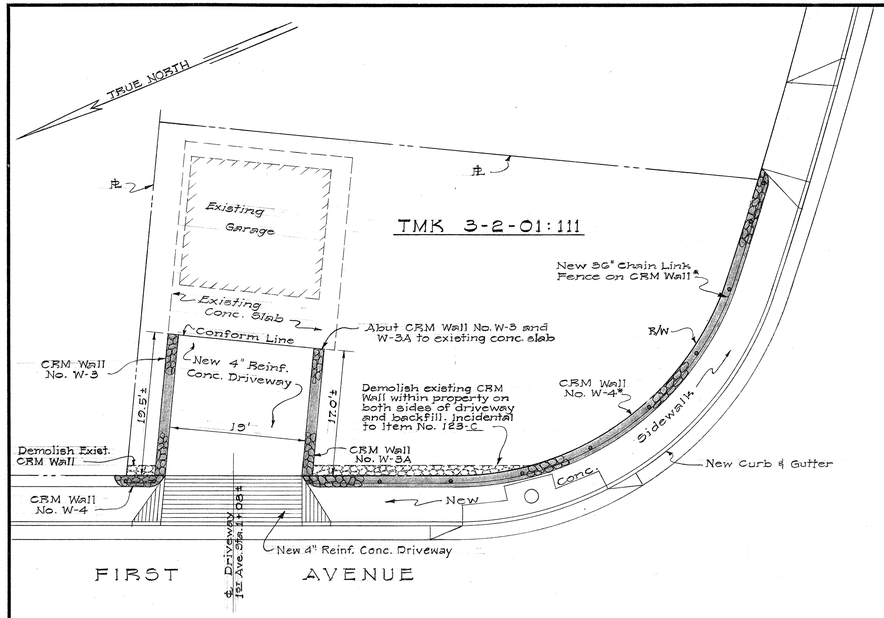

PLAN
Scale: 1" = 10'

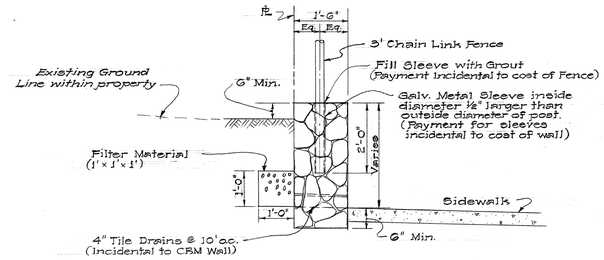

TYPICAL SECTION
OF CRM WALL NO. W-4
Scale: 1" = 2'-0"
*(Not a Part of Item 123 C)

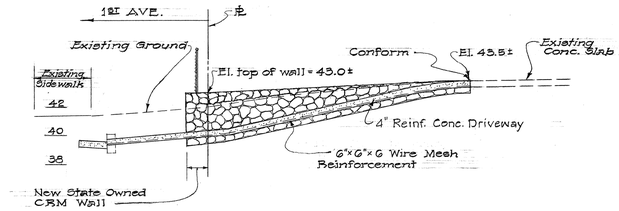

DRIVEWAY PROFILE
Scale: 1" = 5'

NOTES FOR ITEM NO. 123 C

1. Construct CRM Wall Nos. W-3 & W-3A
2. Construct new 4" Reinf. Conc. Driveway.
3. Owner shall be provided access to garage during construction and shall be inconvenienced as little as possible
4. Void area resulting from the demolishing of existing CRM wall shall be backfilled with a top 4" layer of Topsoil and sodded to match surrounding area.
5. Construction of New CRM Wall No. W-4 & 36" Chain Link Fence is not a part of Item 123 C and shall be paid for under the respective Contract Items involved.

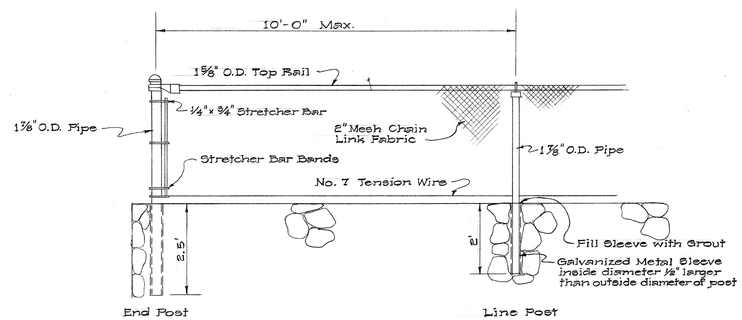

DETAIL OF 3' CHAIN LINK FENCE
Scale: 1" = 2'-0"
*(Not a Part of Item 123 C)

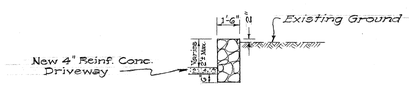

TYPICAL SECTION
OF CRM WALL NOS. W-3 & W-3A
Scale: 1" = 5'

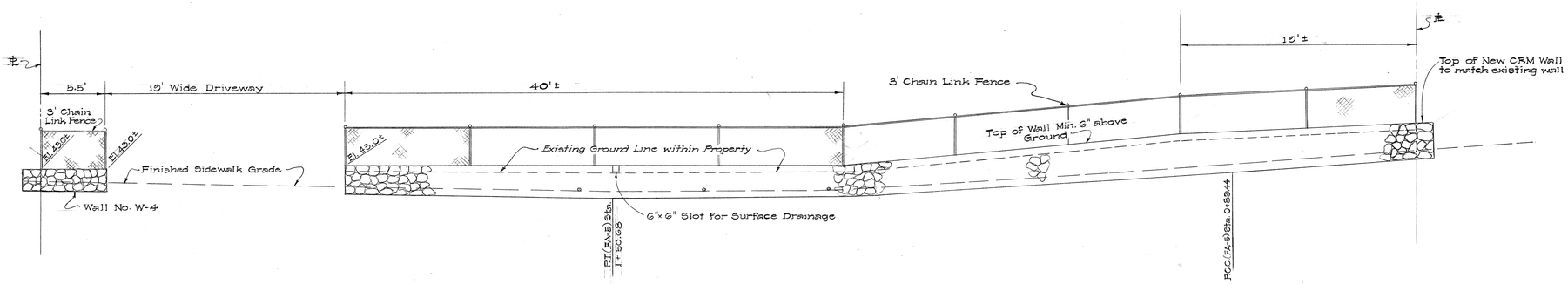

CRM WALL NO. W-4 PROFILE ALONG R/W
Scale: 1" = 5'
*(Not a Part of Item 123 C)

ITEM Nº 123-C

STATE OF HAWAII
DEPARTMENT OF TRANSPORTATION
HIGHWAYS DIVISION

REHABILITATION OF LOT TAX KEY 3-2-01-111 AND CONSTRUCTION OF CRM WALL NO. W-4 WITH 36" CHAIN LINK FENCE ALONG PROPERTY LINE
F.A.I. Proj. No. I-H1-1(5):24, Unit 2

Scale: As Shown Date: May, 1965

SHEET No. 4 OF 7 SHEETS

ORIGINAL PLAN	SURVEY PLOTTED BY	DATE
	DRAWN BY	"
	TRACED BY	"
NOTE BOOK	DESIGNED BY	"
	QUANTITIES BY	"
No.	CHECKED BY	"

PRINTED ON NO. 1000H CLEARPRINT

FED. ROAD DIST. NO.	STATE	FED. AID PROJ. NO.	FISCAL YEAR	SHEET NO.	TOTAL SHEETS
HAWAII	HAW.	I-H1-1(5)-24, Unit 2	1968	50	276

TYPICAL TYPE "B" CRM WALL SECTION
Scale: 1" = 5'-0"

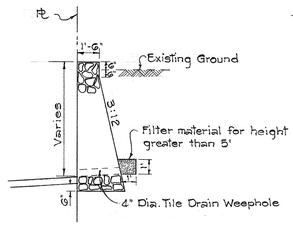

TYPICAL TYPE "D" CRM WALL SECTION
Scale: 1" = 5'-0"

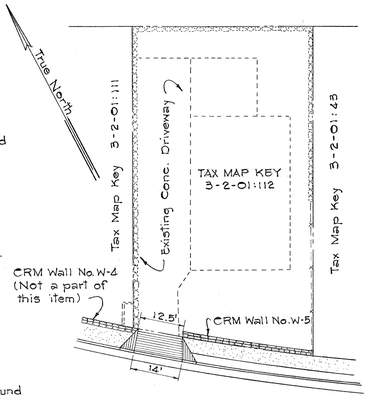

RAMP HK

PLOT PLAN
Scale: 1" = 20'-0"

NOTE:
1. Construct CRM Wall No. W-5.
2. Conform exieting conc. driveway to new drop driveway.
3. Owner shall have continuous use of driveway during construction.
4. All work within property shall be paid for under Item 123-D.

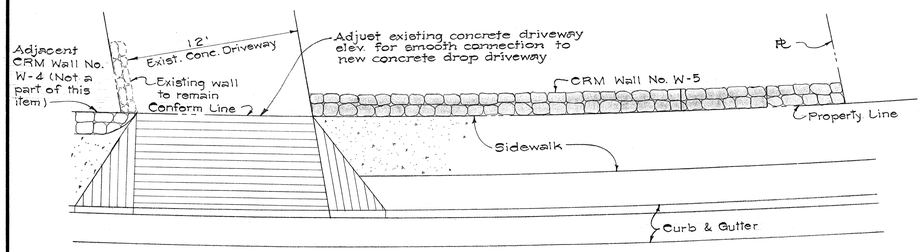

HARDING AVE.
(← To Kapahulu Ave. - - - To Koko Head Ave. →)

PLAN
Scale: 1" = 5'-0"

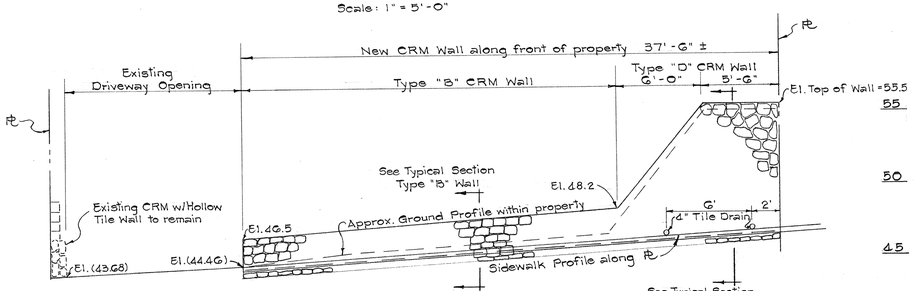

PROFILE
Scale: 1" = 5'-0"

(ITEM No. 123-D)
LOT TAX KEY No. 3-2-01:112
AT 3030 HARDING AVE.
OWNER: MR. & MRS. FRANCIS MORGAN

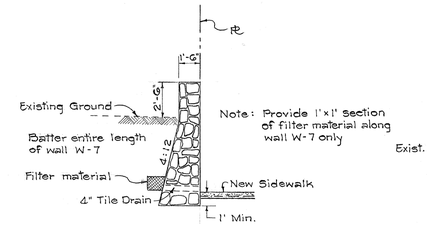

Note: Provide 1'x1' section of filter material along wall W-7 only

TYPICAL SECTION WALL No. W-7
Scale: 1" = 5'-0"

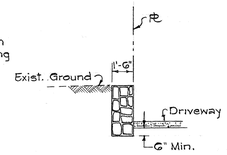

TYPICAL SECTION WALL No. W-7A
Scale: 1" = 5'-0"

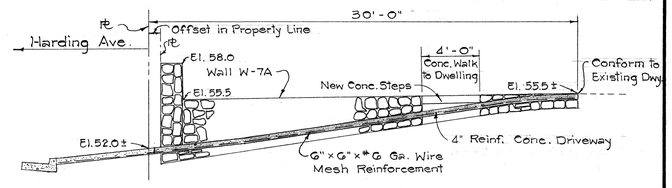

PROFILE ALONG DRIVEWAY ℄
Scale: 1" = 5'-0"

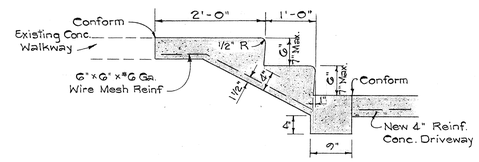

TYPICAL DETAIL OF CONC. STEPS
Scale: 3/4" = 1'-0"

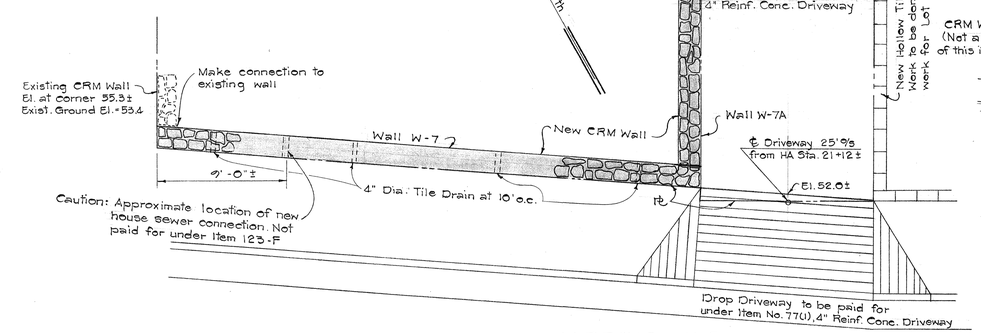

HARDING AVE.
(← To Kapahulu Ave. - - - To Koko Head Ave. →)

PLAN
Scale: 1" = 5'-0"

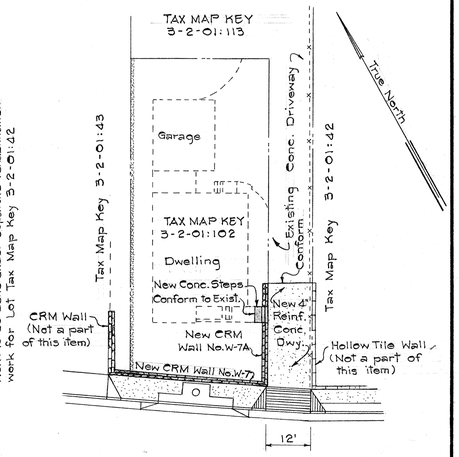

PLOT PLAN
Scale: 1" = 20'-0"

NOTE:
1. Construct new CRM Wall Nos. W-7 & W-7A to elevations shown.
2. Construct 4" Reinforced Concrete Driveway.
3. Construct Concrete Steps to conform to new driveway ramp and existing conc. walk.
4. Contractor shall inconvenience owners as little as possible. Driveway to be usable after each work day.
5. All work involved within property and beyond Drop Driveway shall be paid for under Item No. 123-F.

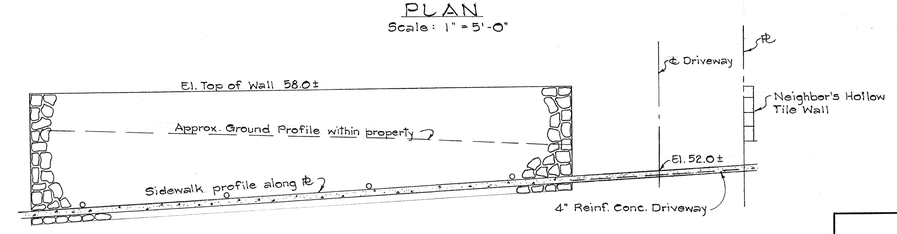

PROFILE ALONG FRONT ℄
Scale: 1" = 5'-0"

(ITEM No. 123-F)
LOT TAX KEY No. 3-2-01:102
AT 3038 HARDING AVE.
OWNER: MR. & MRS. WALTER A. WOOD
LOT TAX KEY No. 3-2-01:113
AT 3038-A HARDING AVE.
OWNER: MR. & MRS. KAM MOW LEE

STATE OF HAWAII
DEPARTMENT OF TRANSPORTATION
HIGHWAYS DIVISION

REHABILITATION OF LOTS
TAX MAP KEY: 3-2-01:112
3-2-01:102
3-2-01:113

F.A.I. Proj. No. I-H1-1(5):24, Unit 2

Scale: As Shown — Date: May, 1964.

SHEET No. 5 OF 7 SHEETS

50 (1)

ORIGINAL PLAN	SURVEY PLOTTED BY	DATE
	DRAWN BY	"
	TRACED BY	"
NOTE BOOK No.	DESIGNED BY	"
	QUANTITIES BY	"
	CHECKED BY	"

PRINTED ON NO. 1000H CLEARPRINT

FED. ROAD DIST. NO.	STATE	FED. AID PROJ. NO.	FISCAL YEAR	SHEET NO.	TOTAL SHEETS
HAWAII	HAW.	F-HI-1(5)24 Unit 2	1966	C051	276

Revised : July 22, 1966

SCOPE OF WORK

1. REMOVE EXISTING HOLLOW TILE RETAINING WALL IN EXISTING PARKING AREA, SALVAGING CHAIN LINK FENCE AND GATE FOR REUSE.
2. SERVICES TO EXISTING UTILITIES SHALL BE MAINTAINED DURING REHABILITATION.
3. TEMPORARY STEPS SHALL BE PROVIDED TO PROPERTY AND DWELLING DURING CONSTRUCTION.
4. ANY EXISTING UTILITY ENCOUNTERED IN THE WORK AREA AND REQUIRING RELOCATION SHALL BE ADJUSTED BY THE CONTRACTOR.
5. I-BEAM, BEARING PLATES AND WELDED JOINTS TO RECEIVE ONE SHOP COAT RED LEAD PAINT, ONE FIELD COAT RED LEAD PAINT AND TWO FIELD COATS FINISH PAINT.
6. ALL CONCRETE SHALL BE CLASS A-1.
7. WORK AREA SHALL BE CLEANED OF DEBRIS AND LEFT IN AN ORDERLY MANNER AFTER EACH WORK DAY.
8. RESOD ALL EXISTING SODDED AREA AFFECTED BY REHABILITATION.
9. ALL WORK INVOLVED WITHIN PROPERTY SHALL BE PAID FOR UNDER ITEM No. 123-E.

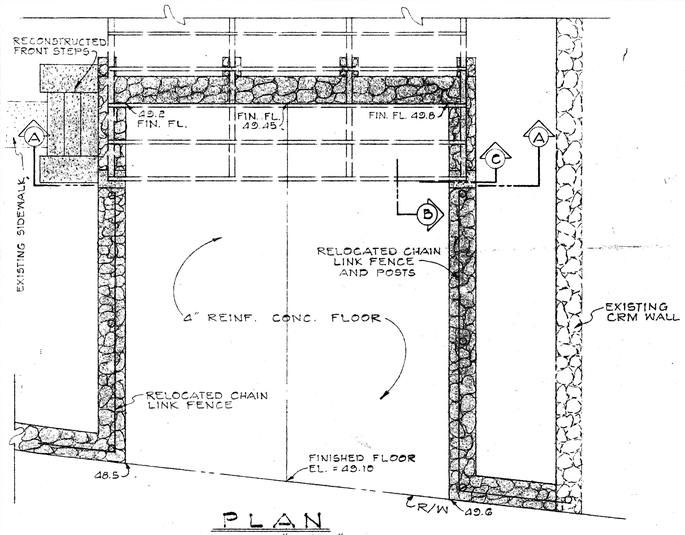

PLAN
Scale : 1/4" = 1'-0"

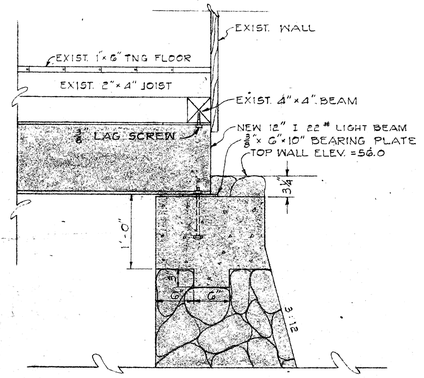

SECTION "C"
Scale : 1" = 1'-0"

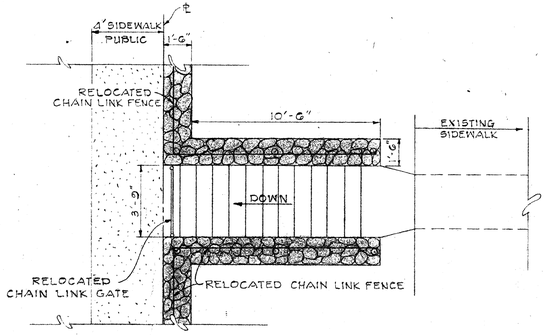

PLAN OF NEW CONC. STEPS AT PROPERTY LINE
Scale : 1/4" = 1'-0"

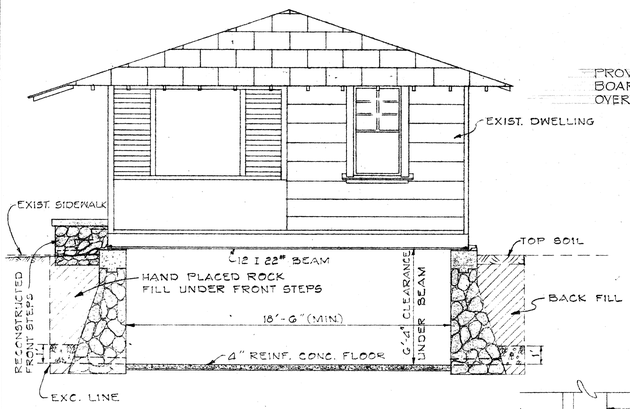

SECTION "A-A"
Scale : 1/4" = 1'-0"

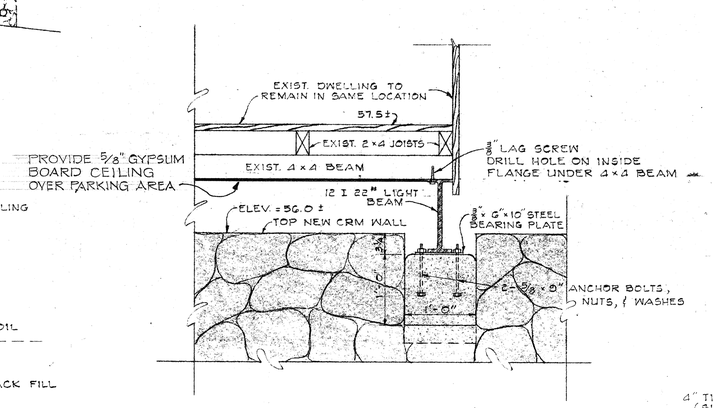

SECTION "B"
CONC. SEAT DETAIL
Scale : 1" = 1'-0"

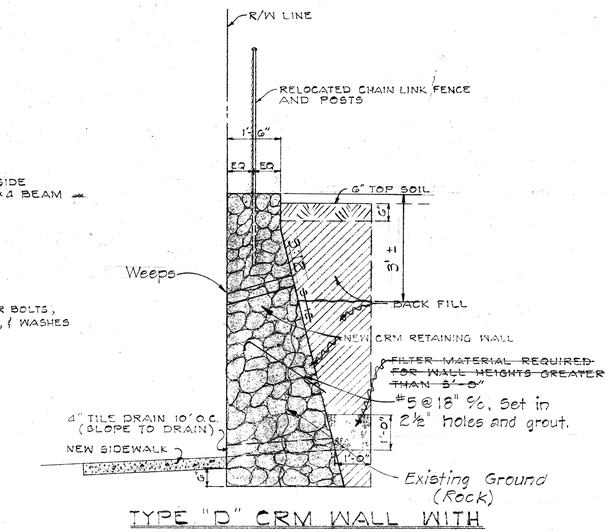

TYPE "D" CRM WALL WITH RELOCATED CHAIN LINK FENCE
Scale : 1/2" = 1'-0"

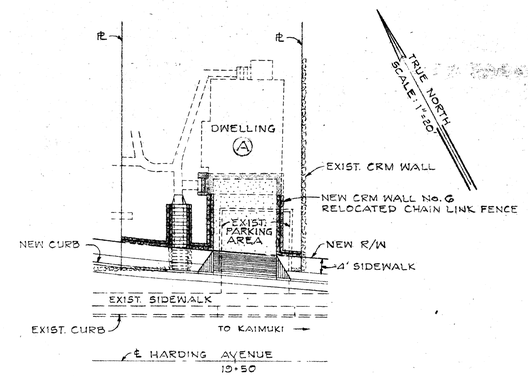

PLOT PLAN
Scale : 1" = 20'

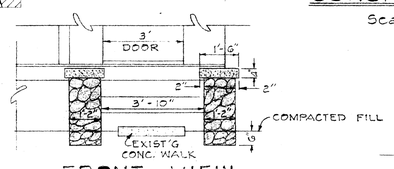

FRONT VIEW OF RECONSTRUCTED STEPS TO DWELLING
Scale : 3/8" = 1'-0"

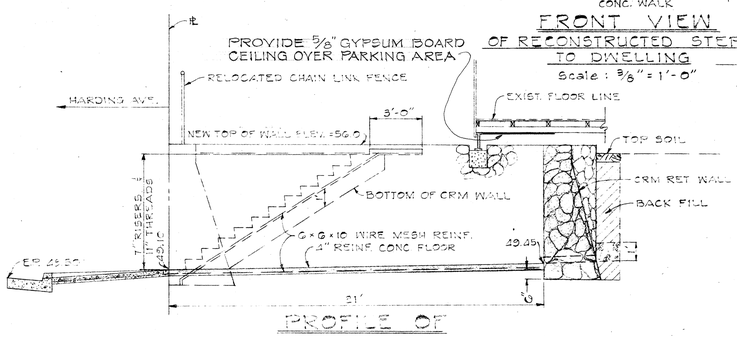

PROFILE OF ℄ DRIVEWAY, ℄ GARAGE & CONC STEPS
Scale : 1/4" = 1'-0"

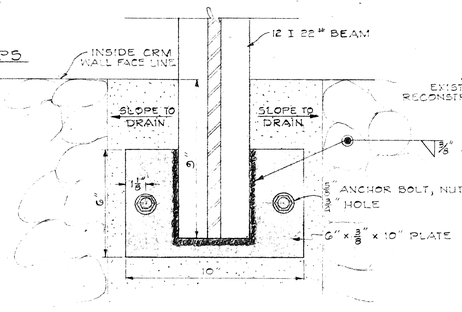

BEARING PLATE DETAIL
Scale : 3" = 1'-0"

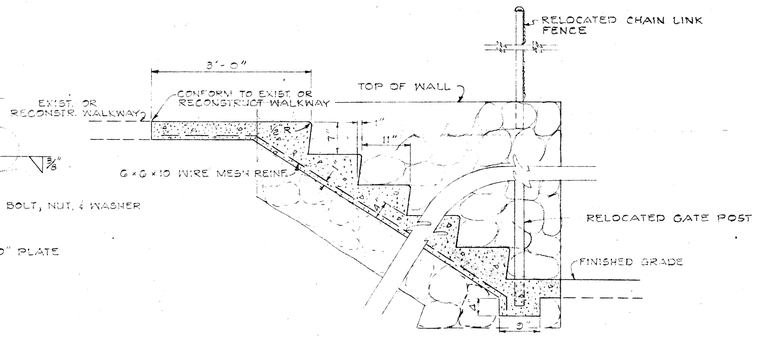

TYPICAL CONC. STEPS DETAIL
Scale : 3/4" = 1'-0"

Revised : July 22, 1966
Gypsum board added over garage.

ITEM Nº 123-E

STATE OF HAWAII
DEPARTMENT OF TRANSPORTATION
HIGHWAYS DIVISION

REHABILITATION OF LOT TAX KEY 3-2-01:43

OWNER — Mr. & Mrs. Seiko Yogi

F.A.I Proj. No. I-HI-1(5)24, Unit 2

Scale : As Shown — Feb. 27, 1964

SHEET No. 6 OF 7 SHEETS

ORIGINAL PLAN		DATE
	SURVEY PLOTTED BY	
	DRAWN BY	
	TRACED BY	
	DESIGNED BY	
NOTE BOOK	QUANTITIES BY	
No.	CHECKED BY	

PRINTED ON CLEARPRINT 1000-H

SHEET No. 51S SUPERSEDES SHEET No. 51 C.O. 51S

FED. ROAD DIST. NO.	STATE	FED. AID PROJ. NO.	FISCAL YEAR	SHEET NO.	TOTAL SHEETS
HAWAII	HAW.	I-H1-1(5)24 Unit 2	1965	52	276

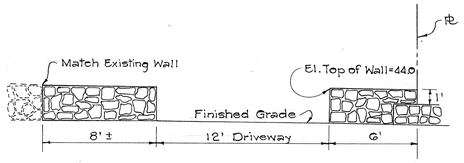

ELEVATION
WALL No. W-2
Scale: 1" = 5'-0"

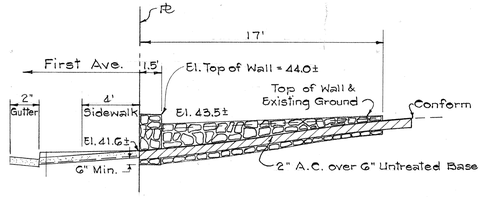

℄ DRIVEWAY PROFILE
Scale: 1" = 5'-0"

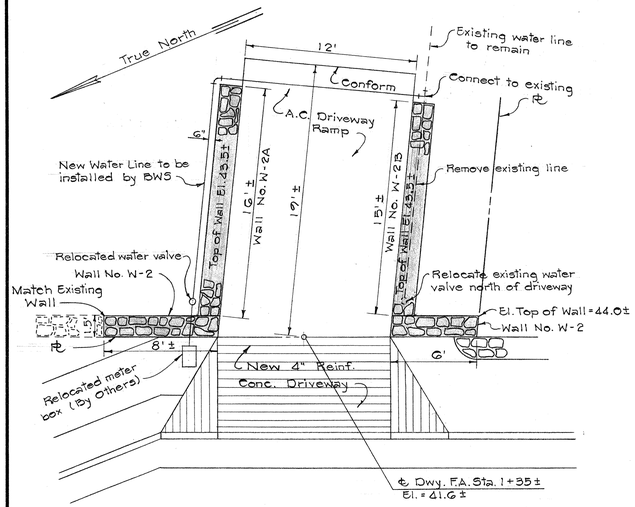

FIRST AVENUE
(← To Waialae Ave. To Harding Ave. →)

PLAN
Scale: 1" = 5'-0"

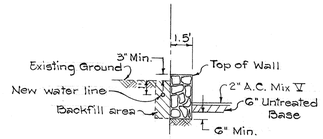

TYPICAL SECTION
WALL Nos. W-2A & W-2B
Scale: 1" = 5'-0"

NOTE:
1. Construct CRM Wall Nos. W-2, W-2A & W-2B and A.C. Driveway as shown.
2. Relocation of valve and rerouting of water line within property to be done by B.W.S. Engineer shall notify B.W.S.
3. Relocate mail box as directed by owner. (Incidental to Contract Item No. G2 - CRM Wall)
4. The owner shall be inconvenienced as little as possible.
5. All work involved shall be paid for separately under applicable Contract Items, unless otherwise noted and not under Item No. 123.

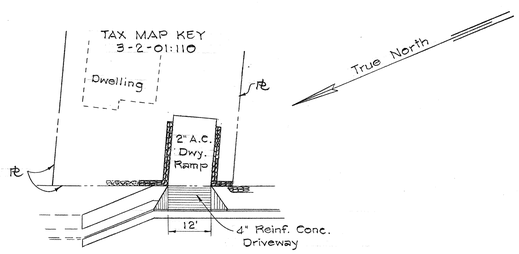

FIRST AVE.

PLOT PLAN
Scale: 1" = 20'-0"

REHABILITATION OF LOT
TAX MAP KEY 3-2-01:110
AT 1111 A & B FIRST AVE.
OWNERS: MR. & MRS. TAMAO HEDANI

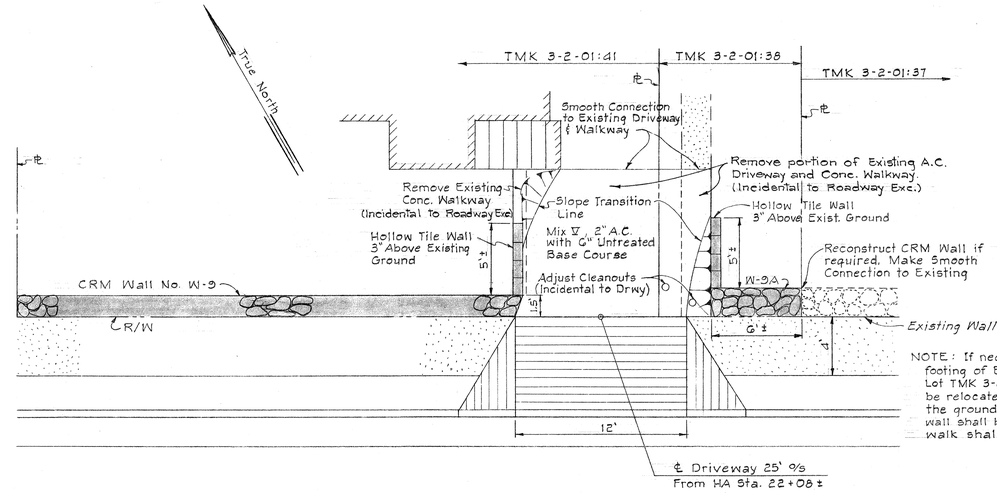

NOTE: If necessary to avoid exposing footing of Existing CRM Wall along Lot TMK 3-2-01:37, sidewalk shall be relocated away from the wall, and the ground between the sidewalk and wall shall be sloped. Width of sidewalk shall remain 4'-0".

← To Kapahulu HARDING AVENUE To Koko Head →

PLAN
Scale: 1" = 5'-0"

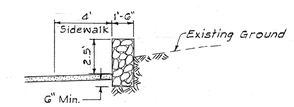

TYPICAL NEW CRM WALL SECTION
Scale: 1" = 5'-0"

NOTE:
1. Construct 2" A.C. Driveway.
2. Remove existing conc. walks & A.C. driveway.
3. Plants along existing CRM Wall shall be removed wherever new CRM Wall replaces the existing.
4. Construct Hollow Tile Wall along driveway.
5. Adjust cleanout to new driveway grade. Incidental to driveway.
6. All work involved shall be paid for separately under applicable Contract Items, unless otherwise noted and not under Item No. 123.

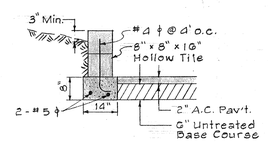

TYPICAL SECTION OF FOOTING DETAIL
Scale: 1/2" = 1'-0"

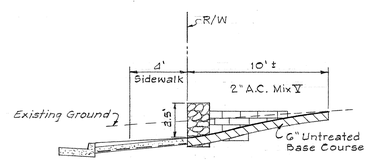

℄ DRIVEWAY PROFILE
Scale: 1" = 5'-0"

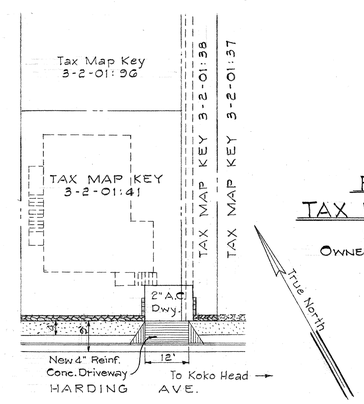

PLOT PLAN
Scale: 1" = 20'

REHABILITATION OF LOT
TAX MAP KEYS 3-2-01:41, 38 & 37
VICINITY OF 3044 HARDING AVE.
OWNERS: MR. & MRS. VINCENT C. CARIAS & OTHERS

STATE OF HAWAII
DEPARTMENT OF TRANSPORTATION
HIGHWAYS DIVISION

REHABILITATION OF LOTS
TAX MAP KEY: 3-2-01:110
3-2-01:41, 38 & 37

F.A.I. Proj. No. I-H1-1(5):24, Unit 2

Scale: As Shown Date: May, 1965.

SHEET No. 7 OF 7 SHEETS

52

ORIGINAL PLAN	SURVEY PLOTTED BY	DATE
	DRAWN BY	"
	TRACED BY	"
	DESIGNED BY	"
NOTE BOOK	QUANTITIES BY	"
No.	CHECKED BY	"

PRINTED ON NO. 1000H CLEARPRINT