FED. ROAD DIST. NO.	STATE	PROJ. NO.	FISCAL YEAR	SHEET NO.	TOTAL SHEETS
HAWAII	HAW.	7413A-01-04M	2014	49	62

GENERAL NOTES

DESIGN SPECIFICATIONS:

AASHTO LRFD Bridge Design Specifications, 5th Edition 2010, including all interim revisions

State of Hawaii, Department of Transportation, Highways Division, "Design Criteria for Bridges and Structures", March 1, 2013

CONSTRUCTION SPECIFICATIONS:

Hawaii Standard Specifications for Road and Bridge Construction 2005, including Special Provisions

Bridge Welding Code -- AWS D1.5M/D1.5:2010

Standard symbols for welding, brazing and nondestructive examination, AWS A2.4:2007

MATERIALS:

Concrete: 4,000 psi, unless otherwise specified

Concrete Admixtures: See Special Provisions

Concrete for bridges, bridge rails, concrete barriers, retaining walls and transitions shall meet the requirements of Section 601, Structural Concrete

A shrinkage-reducing admixture (SRA), Tetraguard AS20, manufactured by BASF, or Eclipse, Manufactured by W.R. Grace & Co., or approved equal shall be added to the concrete. The minimum dosage requirement shall be 128 ounces per cubic yard of concrete. The concrete shall have a minimum shrinkage strain of 0.00006 at 28-days and 0.000145 at 56-days according to ASTM C512

A corrosion inhibitor amine carboxylate water-based admixture shall be added to the concrete. The minimum dosage shall be 1.5 pints per cubic yard of concrete

REINFORCING STEEL:

Deformed and plain carbon-steel bars for concrete reinforcement shall meet the requirements of AASHTO M 31M/M 31-07 Grade 60. (ASTM A615 Grade 60)

Deformed or plain stainless steel bars for concrete reinforcement shall meet the requirements of ASTM A955 Grade 60 Type 316L (UNS Designation S31603)

STRUCTURAL STEEL:

All structural steel shapes, plates, bars and assemblies shall be hot-dipped galvanized after fabrication

Hot-Dip Galvanizing for structural iron and steel products made from rolled, pressed and forged shapes, castings, bars and plates, including unfabricated and fabricated products, shall conform to ASTM A123 (AASHTO M111)

Angles (L-Shapes) and Channels (C-Shapes) shall conform to ASTM A36

Structural Steel Plates and Bars shall conform to ASTM A36

Steel rail tubing shall conform to ASTM A500, Grade B

High-strength bolts (heavy hex structural bolts) shall conform to ASTM A325 Type 3 unless otherwise specified and hot-dip galvanized in accordance to ASTM A153 Class C

Nuts for ASTM A325 bolts shall conform to AASHTO M291 (ASTM A563) Grade DH and hot-dip galvanized in accordance to ASTM A153 Class C

Washers for bolts shall conform to ASTM F436 Type 1 and hot-dip galvanized in accordance to ASTM A153 Class C

DRILLED SHAFT:

Excavation for drilled shaft shall be observed by the Geotechnical Engineer prior to placement of concrete. Cross Sonic Log (CSL) is required for every drilled shaft. Concrete for drilled shaft shall have a minimum of 28 days compressive strength of 4,500 psi.

MISCELLANEOUS MATERIALS:

Preformed expansion joint filler for concrete (bituminous type) shall conform to AASHTO M 33-99 (2007). ASTM D 994-98 (2003)

SYMBOLS AND ABBREVIATIONS

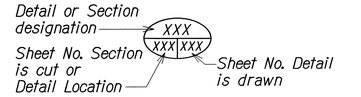

(XX) - ℄ Bearing Abutment Seat Line

- Boring No. & Designation

△ - Angle of Curve, Deflection Angle Between Tangents

ø - Diameter

& - And

∠ - Angle

AB	Anchor Bolt
Abut.	Abutment
at&t	Exist. underground telephone cable
Alum.	Aluminum
Approx.	Approximate
AASHTO	American Association of State and Highway Transportation Officials
ANSI	American National Standards Institute
ASTM	American Society for Testing and Materials
AWS	American Welding Society
℄	Baseline
Bal.	Balance
Beg.	Begin, Beginning
Bet., Btwn.	Between
B.F.	Back Face
B.F.E.	Bottom Footing Elevation
Bk.	Back
Blt.	Bolt
Bm.	Beam
B, Bot., Bott.	Bottom
B.O.C.	Bottom of Curb
Br.	Bridge
Brg., Brgs.	Bearing, Bearings
B.V.C.	Beginning of Vertical Curve
B.W.	Both Ways
℄	Center Line
cdi	Exist. Concrete Drop Inlet
Cant.	Cantilever
C.F.	Cubic Feet
CiP	Cast in Place
C.I.P.	Cast Iron Pipe
Cl., Clr.	Clear
Col.	Column
Conc.	Concrete
Conn.	Connection
Const.	Construction
Cont.	Continuous
CRM	Cement Rubble Masonry
CR	Corrosion Resistant
C.Y., Cu. Yd.	Cubic Yards
Det.	Detail
Delta, △	Angle of Curve, Deflection Angle Between Tangents
Dia., ø	Diameter
Diag.	Diagonal
Dim.	Dimension
Dwg., Dwgs.	Drawing, Drawings
E	East
EA, Ea., ea.	Each
E.F.	Each Face
Elec.	Electrical
emh	Exist. Electric Manhole
El., Elev.	Elevation
Emb.	Embankment
E.P.	Edge of Pavement
Eq.	Equal
Est.	Estimated
E.W.	Each Way
Exc.	Excavation
Exist.	Existing
Exp., (E)	Expansion
Ext.	Exterior
(F)	Fixed
F'_c	Specified Strength of Concrete
F'_{ci}	Strength of Concrete at Time of Initial Prestress
F.F.	Front Face
Fig.	Figure
Fin.	Finish
Fin. Gr.	Finish Grade
Ftg.	Footing
Ga.	Gage, Gauge
Galv.	Galvanized
Gir., G	Exist. Grated Drop Inlet
gdi	Girder
G.R.P.	Grouted Rubble Paving
Gr.	Grade
Grd.	Ground
(H)	Hinge
Horiz.	Horizontal
HS	High Strength
Ht.	Height
Hwy.	Highway
I.B.	Inbound
ID	Inside Dimension
I.F.	Inside Face
In.	Inch
Int.	Interior
Inv.	Invert
Jt.	Joint
L	Length
LBS., lb., lbs.	Pound, Pounds
L_C	Length of Curve
L.F., Lin. Ft.	Linear Feet
Lg.	Long
Longit.	Longitudinal
L.S.	Lump Sum
Lt.	Left
Ltg. Std.	Lighting Standard
Max.	Maximum
Mech.	Mechanical
Min.	Minimum
Misc.	Miscellaneous
N	North
N.B.	Northbound
N.F.	Near Face
No., #	Number
N.T.S.	Not To Scale
O.B.	Outbound
o.c.	On Center
OD	Outside Dimension
O.G.	Outside Girder
Opn'g	Opening
o/s, O/S	Offset
P.B.	Pull Box
P.C.	Point of Curvature
P.C.C.	Portland Cement Concrete
Perf.	Perforated
PG-( )	Prestressed Girder-(Type)
PL	Plate
plf	Pounds per Linear Foot
pp	Exist. Power Pole
P/S	Prestressed Strands
Pvmt.	Pavement
R	Radius
Rdwy	Roadway
Ref.	Reference
Reinf.	Reinforcement
Ret.	Retaining
Req'd	Required
R.F.	Rear Face
Rt.	Right
R/W	Right Of Way
s#	Sewer Line # inches diameter
S	South
S.B.	Southbound
Sect.	Section
SF	Square Feet
Shldr.	Shoulder
Sht.	Sheet
smh	Exist. Sewer Manhole
Spc.	Space
Spcd.	Spaced
Spcg.	Spacing
Spcs.	Spaces
Spec.	Specification
Sprd.	Spread
Sta.	Station
Std.	Standard
Stirr.	Stirrup
Str.	Straight
Struct.	Structural
Symm.	Symmetrical
t	Exist. underground telephone cable
T	Top or Tangent
Temp.	Temporary
Thk.	Thick, Thickness
tmh	Exist. Telephone Manhole
T&B	Top & Bottom
T.O.D.	Top Of Deck
T.O.W.	Top Of Wall
Tot.	Total
tp	Exist. Telephone Pole
Transv.	Transverse
TS	Tube Steel
Typ.	Typical
Var.	Varies
V.C.	Vertical Curve
Vert.	Vertical
W	West
w/	With
w#	Water Line # inches diameter
W.W.	Wingwall

ORIGINAL PLAN	SURVEY PLOTTED BY	DATE
	DRAWN BY	
	TRACED BY	
NOTE BOOK	DESIGNED BY	
	QUANTITIES BY	
	CHECKED BY	

d:\4/6/usr2/ksg/sf/lilha_sep/

STATE OF HAWAII
DEPARTMENT OF TRANSPORTATION
HIGHWAYS DIVISION

GENERAL NOTES, SYMBOLS and ABBREVIATIONS
LILIHA STREET REHABILITATION
NORTH KING STREET to SCHOOL STREET
Project No. 7413A-01-04M

Scale: As Noted | Date: Dec, 2013

SHEET No. 01 OF 14 SHEETS

FED. ROAD DIST. NO.	STATE	PROJ. NO.	FISCAL YEAR	SHEET NO.	TOTAL SHEETS
HAWAII	HAW.	7413A-01-04M	2014	50	62

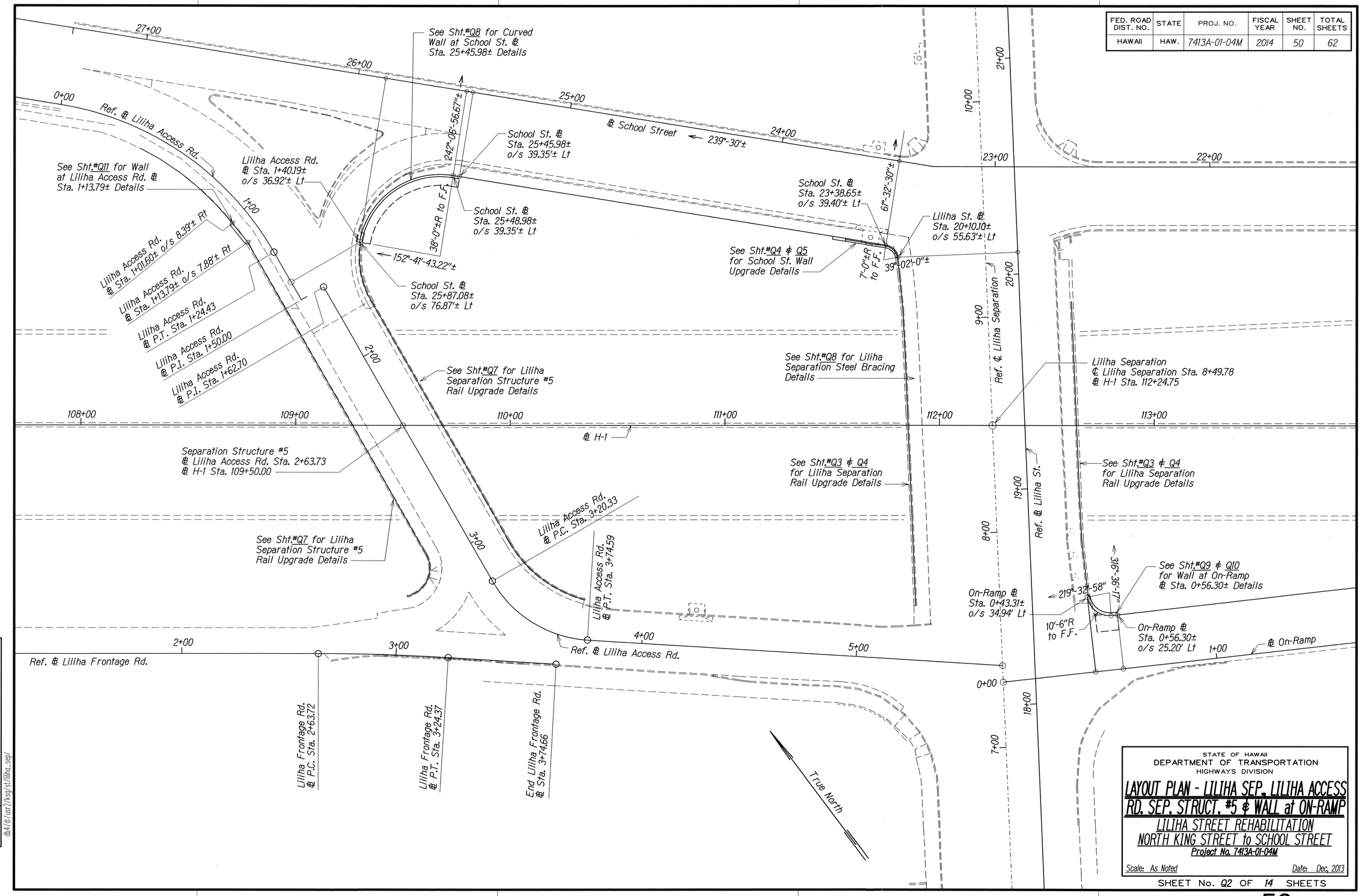

STATE OF HAWAII
DEPARTMENT OF TRANSPORTATION
HIGHWAYS DIVISION

LAYOUT PLAN - LILIHA SEP, LILIHA ACCESS RD. SEP. STRUCT. #5 & WALL at ON-RAMP

LILIHA STREET REHABILITATION
NORTH KING STREET to SCHOOL STREET
Project No. 7413A-01-04M

Scale: As Noted — Date: Dec. 2013

SHEET No. Q2 OF 14 SHEETS

ORIGINAL PLAN	SURVEY PLOTTED BY	DATE
	DRAWN BY	
	TRACED BY	
NOTE BOOK	DESIGNED BY	
	QUANTITIES BY	
	CHECKED BY	

db41/d:/usr/ksg/st/liliha_sep/

FED. ROAD DIST. NO.	STATE	PROJ. NO.	FISCAL YEAR	SHEET NO.	TOTAL SHEETS
HAWAII	HAW.	7413A-01-04M	2014	C.O.51	62

AS-BUILT DRAWINGS

This certifies that the dimensions and details shown on this sheet reflect the dimensions and details, and specifications as constructed in the field.

KAIKOR CONSTRUCTION CO., INC.

DATE: 7/27/20

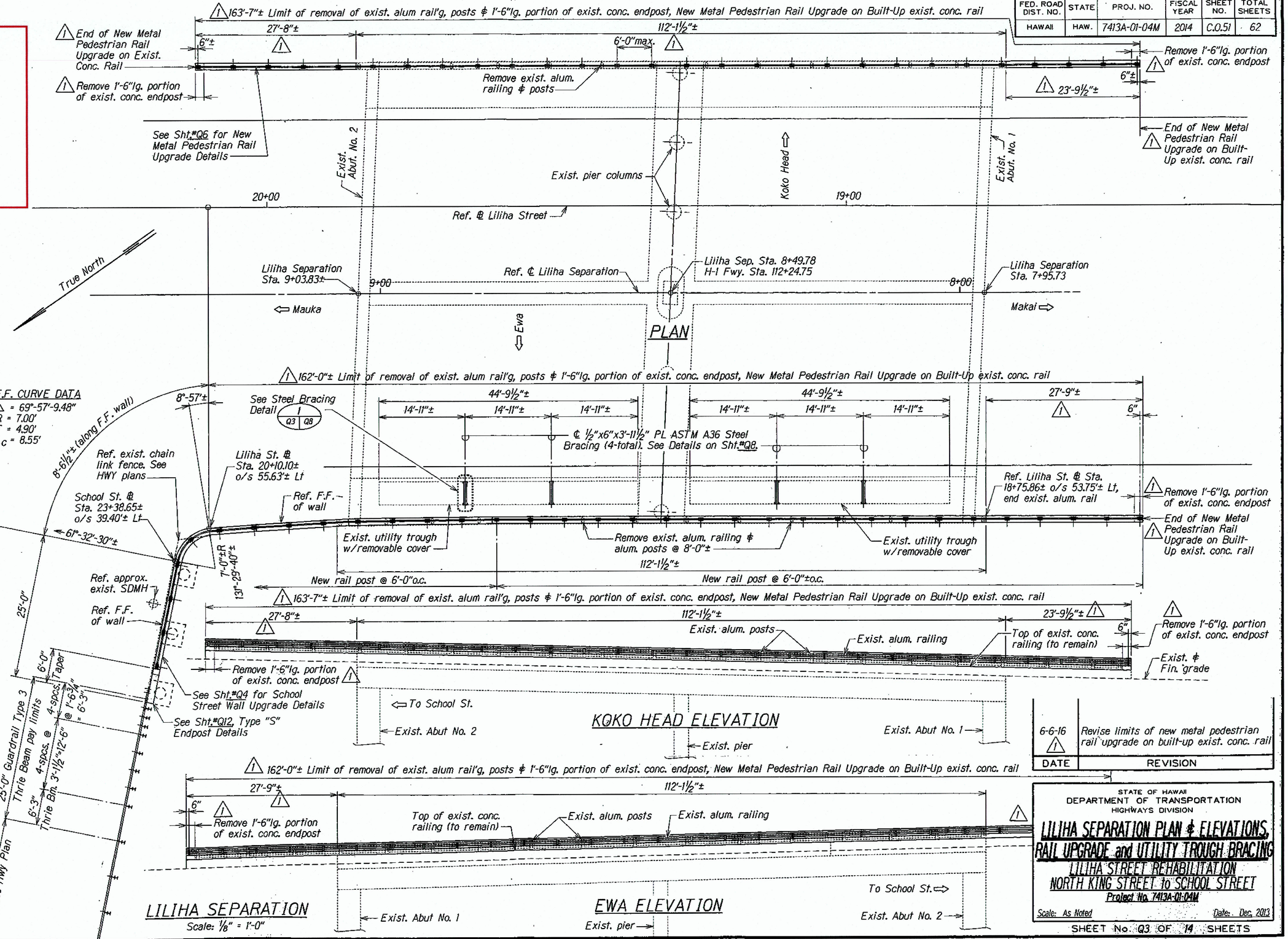

DATE	REVISION
6-6-16 1	Revise limits of new metal pedestrian rail upgrade on built-up exist. conc. rail

STATE OF HAWAII
DEPARTMENT OF TRANSPORTATION
HIGHWAYS DIVISION

LILIHA SEPARATION PLAN & ELEVATIONS, RAIL UPGRADE and UTILITY TROUGH BRACING

LILIHA STREET REHABILITATION
NORTH KING STREET to SCHOOL STREET
Project No. 7413A-01-04M

Scale: As Noted — Date: Dec. 2013

SHEET No. Q3 OF 14 SHEETS

C.O.51

ORIGINAL PLAN — SURVEY PLOTTED BY / DRAWN BY / TRACED BY / DESIGNED BY / QUANTITIES BY / CHECKED BY — DATE

NOTE BOOK

04:\ft:\ust2\ksg\st\lilha_sep\

AS-BUILT DRAWINGS

This certifies that the dimensions and details shown on this sheet reflect the dimensions and details, and specifications as constructed in the field.

KAIKOR CONSTRUCTION CO., INC.

DATE: 7/27/20

FED. ROAD DIST. NO.	STATE	PROJ. NO.	FISCAL YEAR	SHEET NO.	TOTAL SHEETS
HAWAII	HAW.	7413A-01-04M	2014	52	62

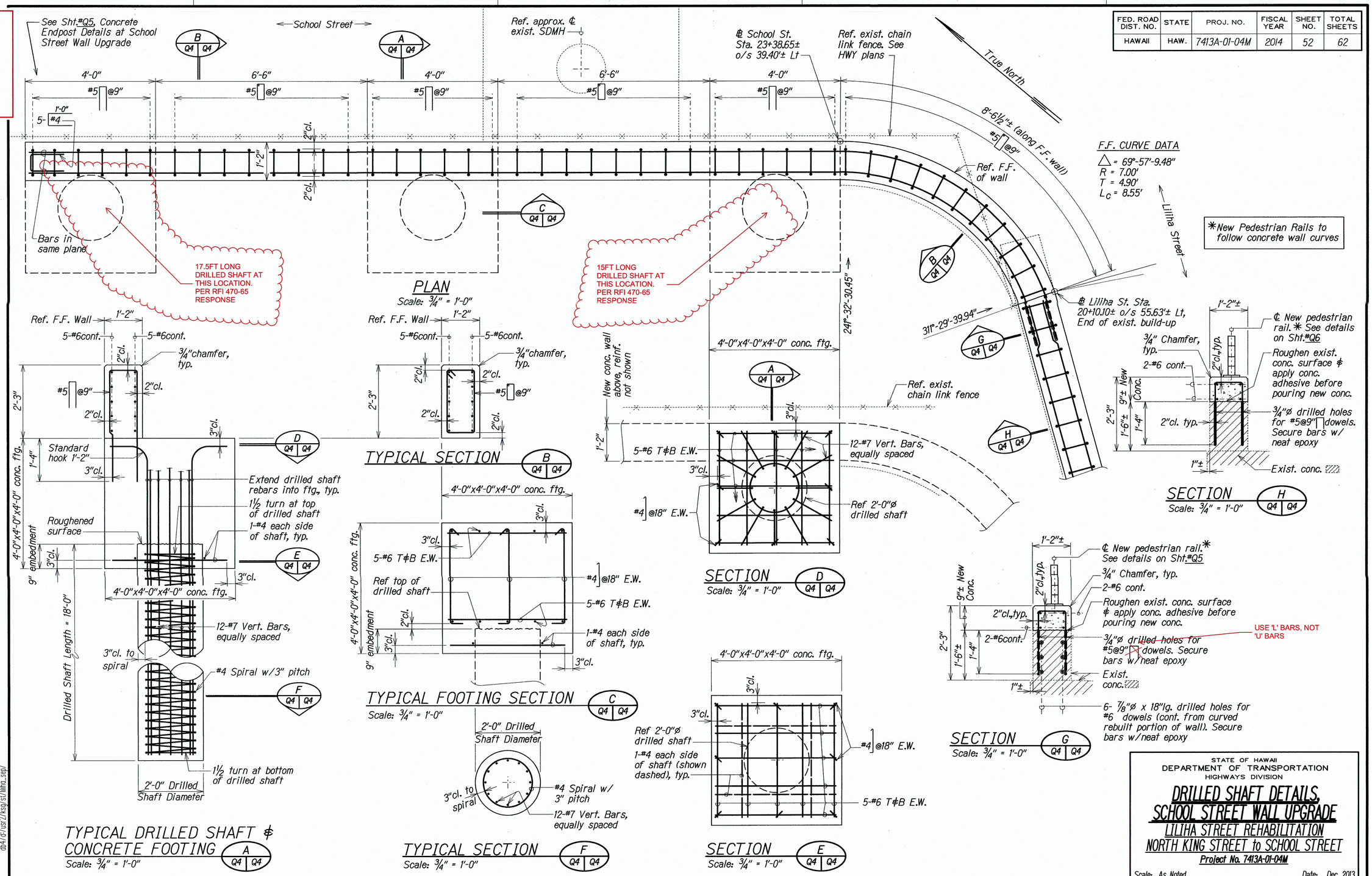

STATE OF HAWAII
DEPARTMENT OF TRANSPORTATION
HIGHWAYS DIVISION

DRILLED SHAFT DETAILS, SCHOOL STREET WALL UPGRADE
LILIHA STREET REHABILITATION
NORTH KING STREET to SCHOOL STREET
Project No. 7413A-01-04M

Scale: As Noted — Date: Dec. 2013

SHEET No. Q4 OF 14 SHEETS

"AS-BUILT"

FED. ROAD DIST. NO.	STATE	PROJ. NO.	FISCAL YEAR	SHEET NO.	TOTAL SHEETS
HAWAII	HAW.	7413A-01-04M	2014	53	62

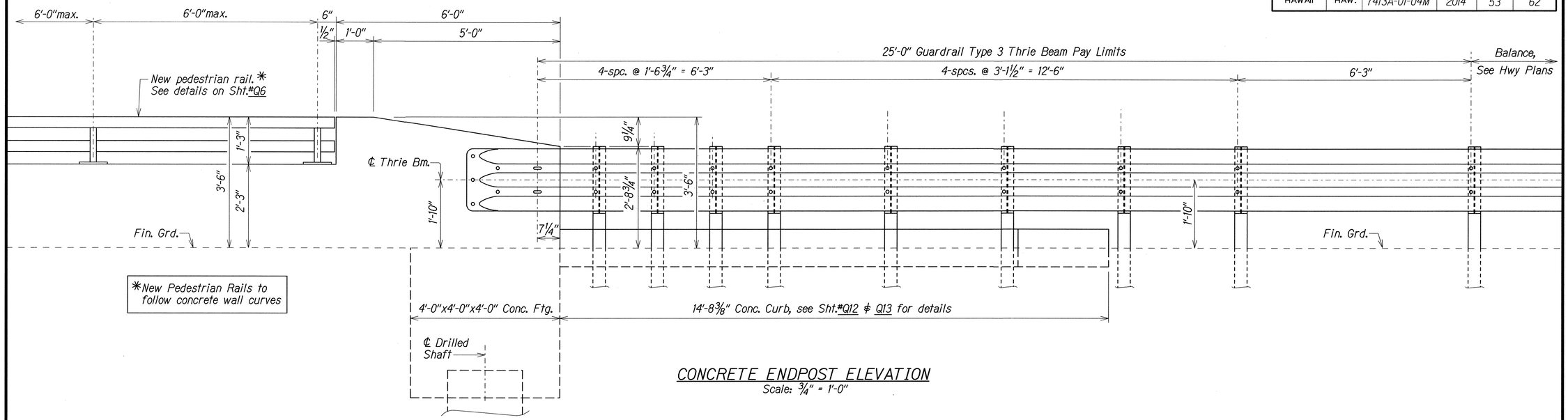

CONCRETE ENDPOST ELEVATION

Scale: 3/4" = 1'-0"

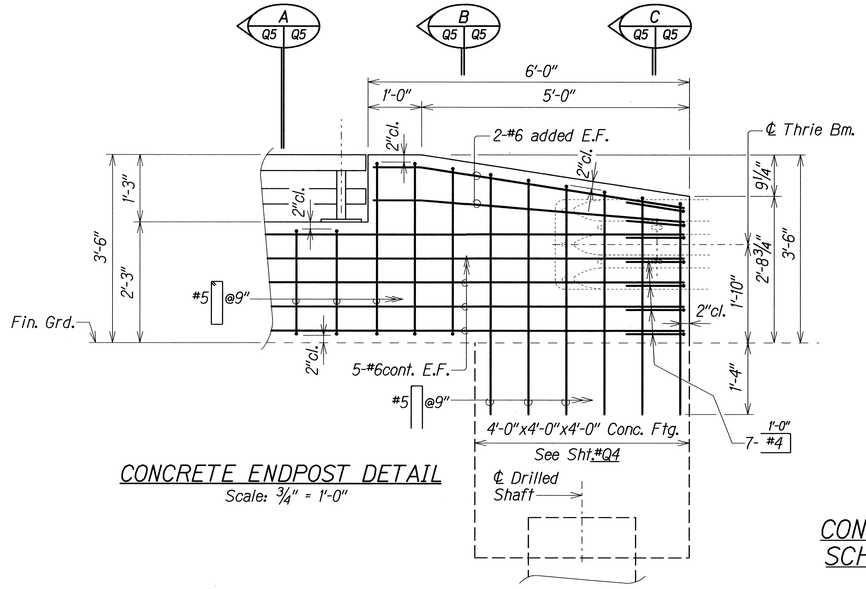

CONCRETE ENDPOST DETAIL

Scale: 3/4" = 1'-0"

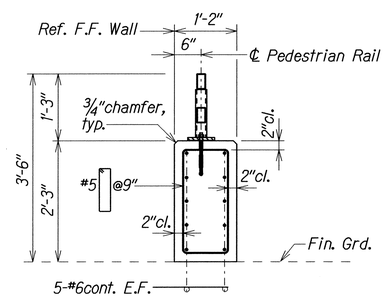

SECTION A Q5 Q5

Scale: 3/4" = 1'-0"

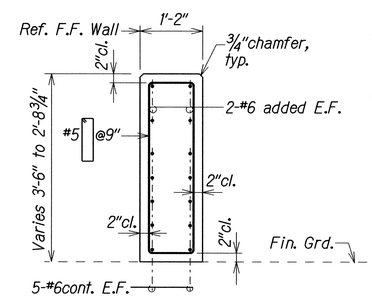

SECTION B Q5 Q5

Scale: 3/4" = 1'-0"

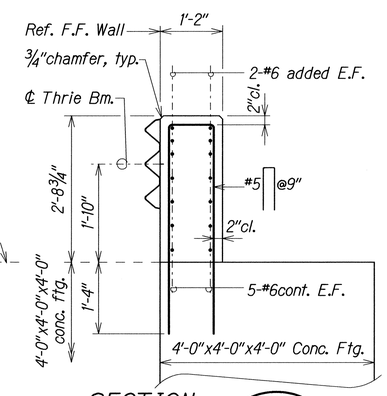

SECTION C Q5 Q5

Scale: 3/4" = 1'-0"

CONCRETE ENDPOST DETAILS at SCHOOL STREET WALL UPGRADE

Scale: 3/4" = 1'-0"

ORIGINAL PLAN	SURVEY PLOTTED BY	DATE
	DRAWN BY	
	TRACED BY	
NOTE BOOK	DESIGNED BY	
	QUANTITIES BY	
Niliha3sep_q5.dgn	CHECKED BY	

Φ14/6:/usr2/ksy/st/liliha_sep/

STATE OF HAWAII
DEPARTMENT OF TRANSPORTATION
HIGHWAYS DIVISION

CONCRETE ENDPOST DETAILS at SCHOOL STREET WALL UPGRADE

LILIHA STREET REHABILITATION
NORTH KING STREET to SCHOOL STREET
Project No. 7413A-01-04M

Scale: As Noted — Date: Dec, 2013

SHEET No. Q5 OF 14 SHEETS

FED. ROAD DIST. NO.	STATE	PROJ. NO.	FISCAL YEAR	SHEET NO.	TOTAL SHEETS
HAWAII	HAW.	7413A-01-04M	2014	54	62

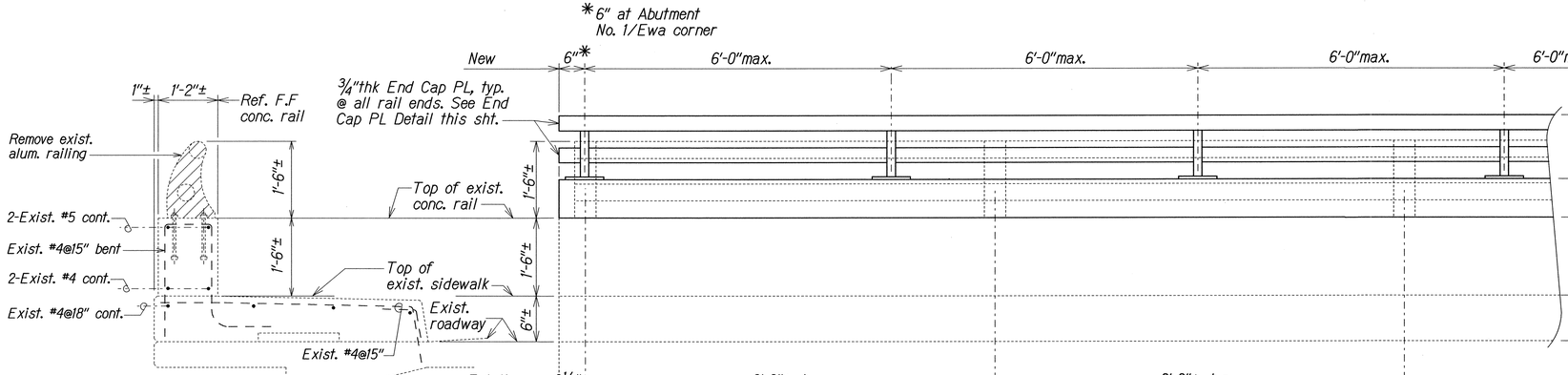

REMOVAL LIMITS of EXISTING GUARDRAIL

TYPICAL ELEVATION NEW PEDESTRIAN GUARDRAIL UPGRADE*

Scale: 3/4" = 1'-0"

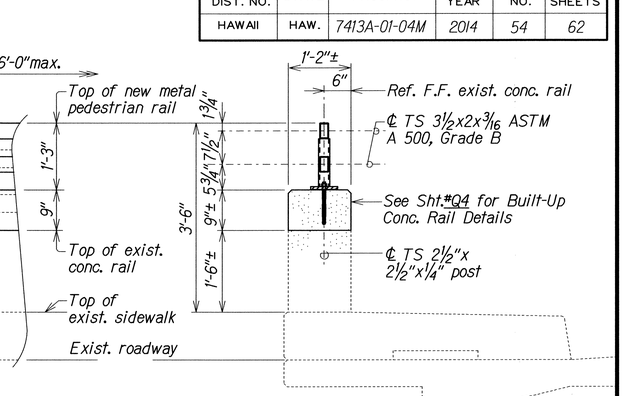

TYPICAL SECTION NEW PEDESTRIAN GUARDRAIL UPGRADE

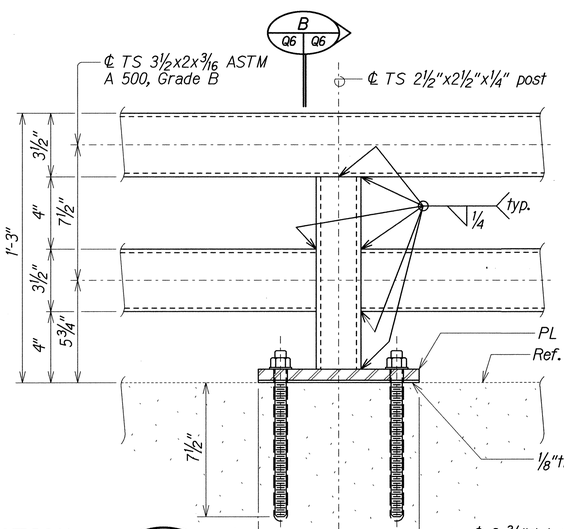

SECTION A Q6 Q6

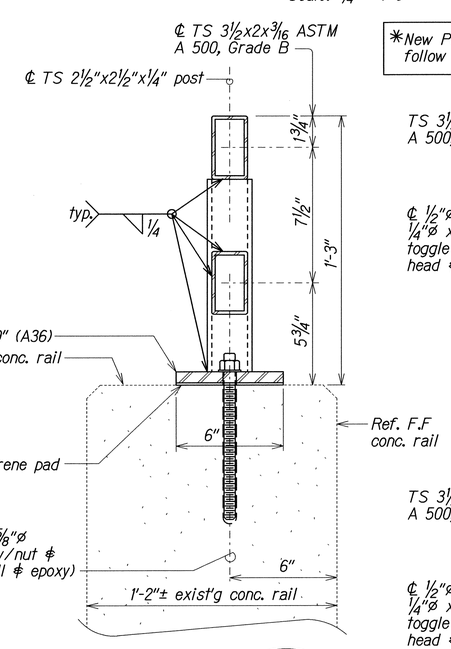

SECTION B Q6 Q6

*New Pedestrian Rails to follow concrete wall curves

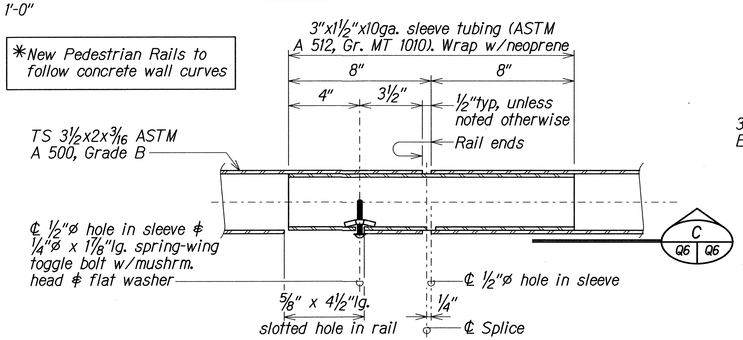

ELEVATION

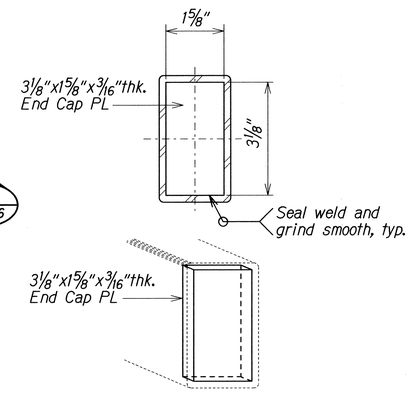

CAP PLATE DETAILS

(TYPICAL AT RAIL ENDS)
Not to Scale

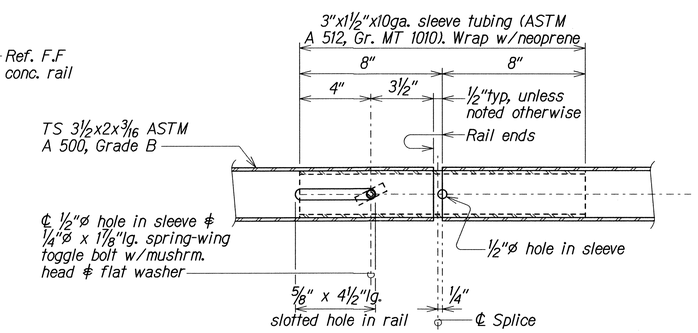

BOTTOM DETAIL VIEW C Q6 Q6

TYPICAL TUBE SPLICE DETAIL

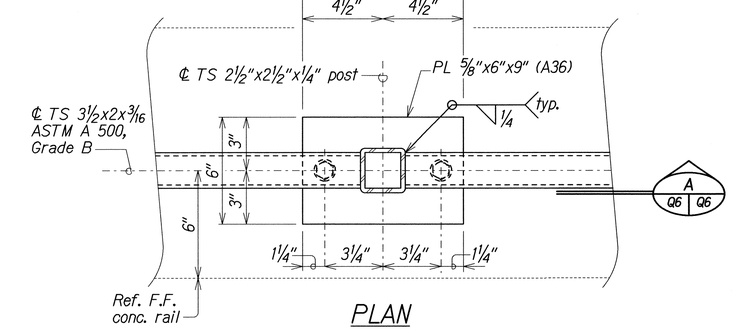

PLAN

NEW METAL PEDESTRIAN RAIL UPGRADE on BUILT-UP EXISTING CONCRETE RAIL DETAILS

Scale: 3" = 1'-0"

ORIGINAL PLAN	SURVEY PLOTTED BY	DATE
	DRAWN BY	
	TRACED BY	
NOTE BOOK	DESIGNED BY	
	QUANTITIES BY	
	CHECKED BY	

dh4/d/usr2/ksg/st/illmo_sep/illmosep_gb.dgn

STATE OF HAWAII
DEPARTMENT OF TRANSPORTATION
HIGHWAYS DIVISION

NEW METAL PEDESTRIAN RAIL UPGRADE on BUILT-UP EXISTING CONCRETE RAIL DETAILS

LILIHA STREET REHABILITATION
NORTH KING STREET to SCHOOL STREET
Project No. 7413A-01-04M

Scale: As Noted — Date: Dec. 2013

SHEET No. Q6 OF 14 SHEETS

FED. ROAD DIST. NO.	STATE	PROJ. NO.	FISCAL YEAR	SHEET NO.	TOTAL SHEETS
HAWAII	HAW.	7413A-01-04M	2014	C.O.55	62

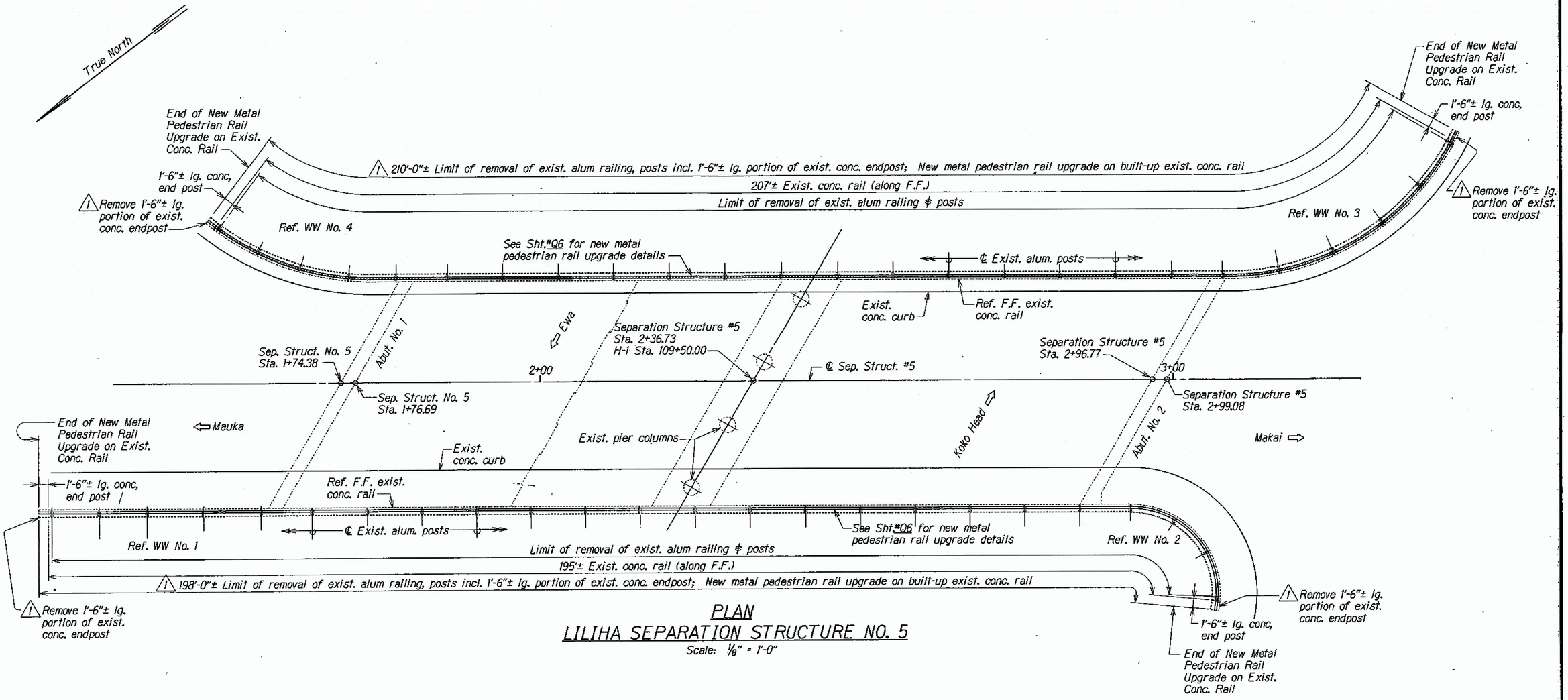

PLAN
LILIHA SEPARATION STRUCTURE NO. 5

Scale: 1/8" = 1'-0"

AS-BUILT DRAWINGS

This certifies that the dimensions and details shown on this sheet reflect the dimensions and details, and specifications as constructed in the field.

KAIKOR CONSTRUCTION CO., INC.

DATE: 7/27/20

DATE	REVISION
6-8-16 1	Drawing has been altered to clarify removal of 1'-6"± lg. portion of existing conc. endpost

STATE OF HAWAII
DEPARTMENT OF TRANSPORTATION
HIGHWAYS DIVISION

LILIHA SEPARATION STRUCTURE NO. 5 PLAN

LILIHA STREET REHABILITATION
NORTH KING STREET to SCHOOL STREET
Project No. 7413A-01-04M

Scale: As Noted — Date: Dec. 2013

SHEET No. Q7 OF 14 SHEETS

C.O.55

ORIGINAL PLAN — SURVEY PLOTTED BY — DRAWN BY — TRACED BY — DESIGNED BY — QUANTITIES BY — CHECKED BY — DATE

NOTE BOOK

db4/d:/ust2/ksg/st/Wilhelmina_Sep/

FED. ROAD DIST. NO.	STATE	PROJ. NO.	FISCAL YEAR	SHEET NO.	TOTAL SHEETS
HAWAII	HAW.	7413A-01-04M	2014	56	62

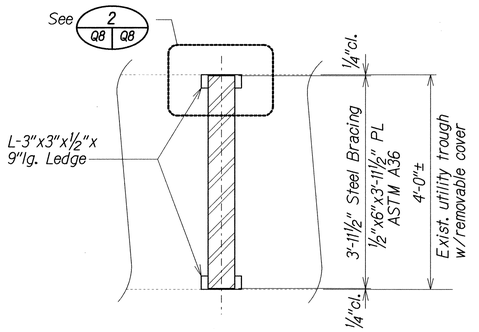

Note: Contractor shall verify actual existing dimensions at each bracing location and adjust detail as may be required.

STEEL BRACING DETAIL (1 Q3 Q8)
Not to Scale

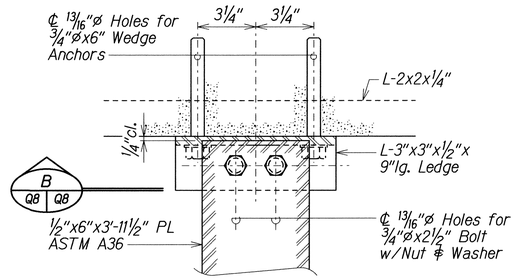

STEEL BRACING PLAN (2 Q8 Q8)
Not to Scale

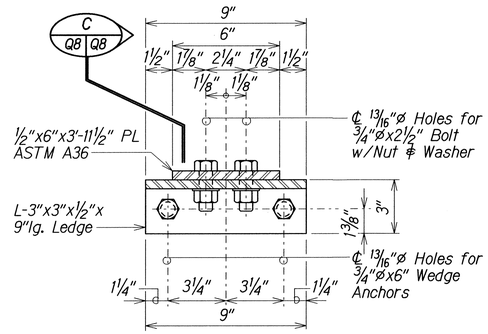

STEEL BRACING ELEVATION (B Q8 Q8)
Not to Scale

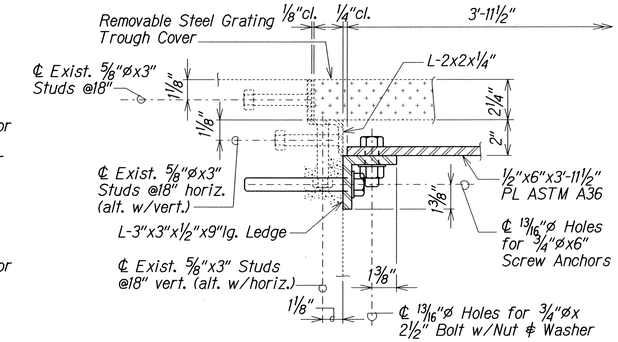

STEEL BRACING TYPICAL SECTION (C Q8 Q8)
Not to Scale

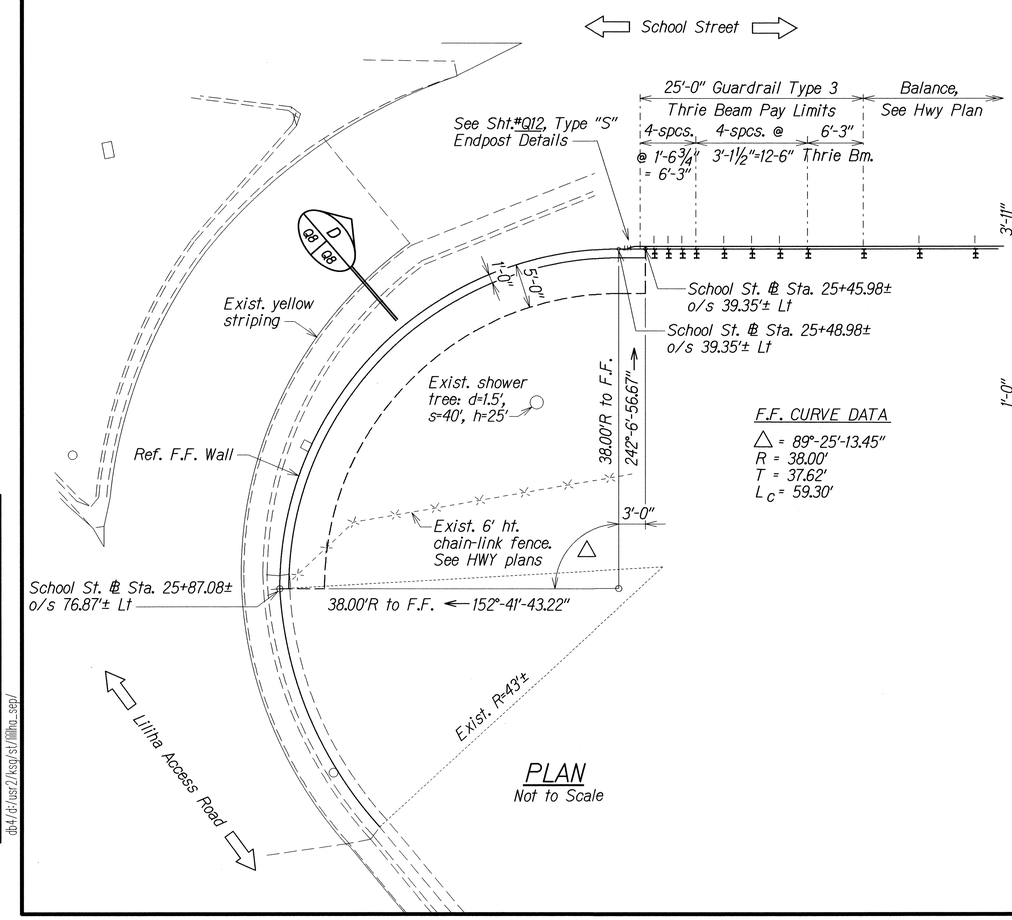

F.F. CURVE DATA
△ = 89°-25'-13.45"
R = 38.00'
T = 37.62'
L_C = 59.30'

PLAN
Not to Scale

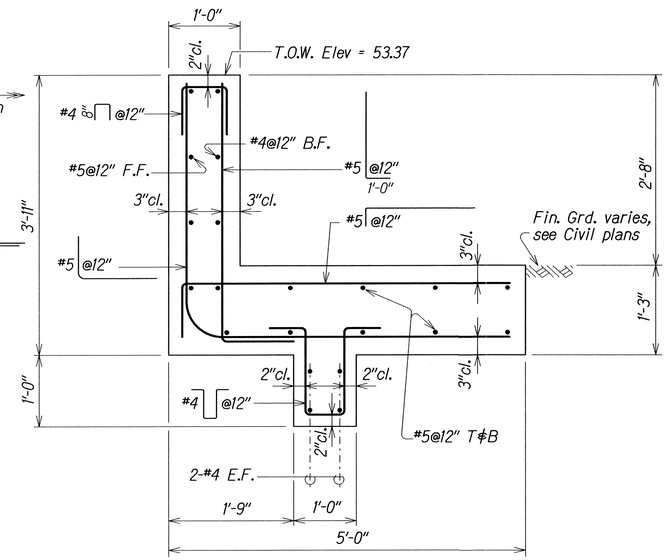

SECTION (D Q8 Q8)
Scale: 1" = 1'-0"

ORIGINAL PLAN	SURVEY PLOTTED BY	DATE
	DRAWN BY	
	TRACED BY	
NOTE BOOK	DESIGNED BY	
	QUANTITIES BY	
	CHECKED BY	

dgn/ksp/st/liliha_sep/

STATE OF HAWAII
DEPARTMENT OF TRANSPORTATION
HIGHWAYS DIVISION

CURVED WALL at ℄ STA. 25+48.98±
LILIHA STREET REHABILITATION
NORTH KING STREET to SCHOOL STREET
Project No. 7413A-01-04M

Scale: As Noted — Date: Dec, 2013

SHEET No. Q8 OF 14 SHEETS

FED. ROAD DIST. NO.	STATE	PROJ. NO.	FISCAL YEAR	SHEET NO.	TOTAL SHEETS
HAWAII	HAW.	7413A-01-04M	2014	57	62

F.F. CURVE DATA

△ = 82°-56'-40.58"
R = 10.50'
T = 9.28'
L_C = 15.20'

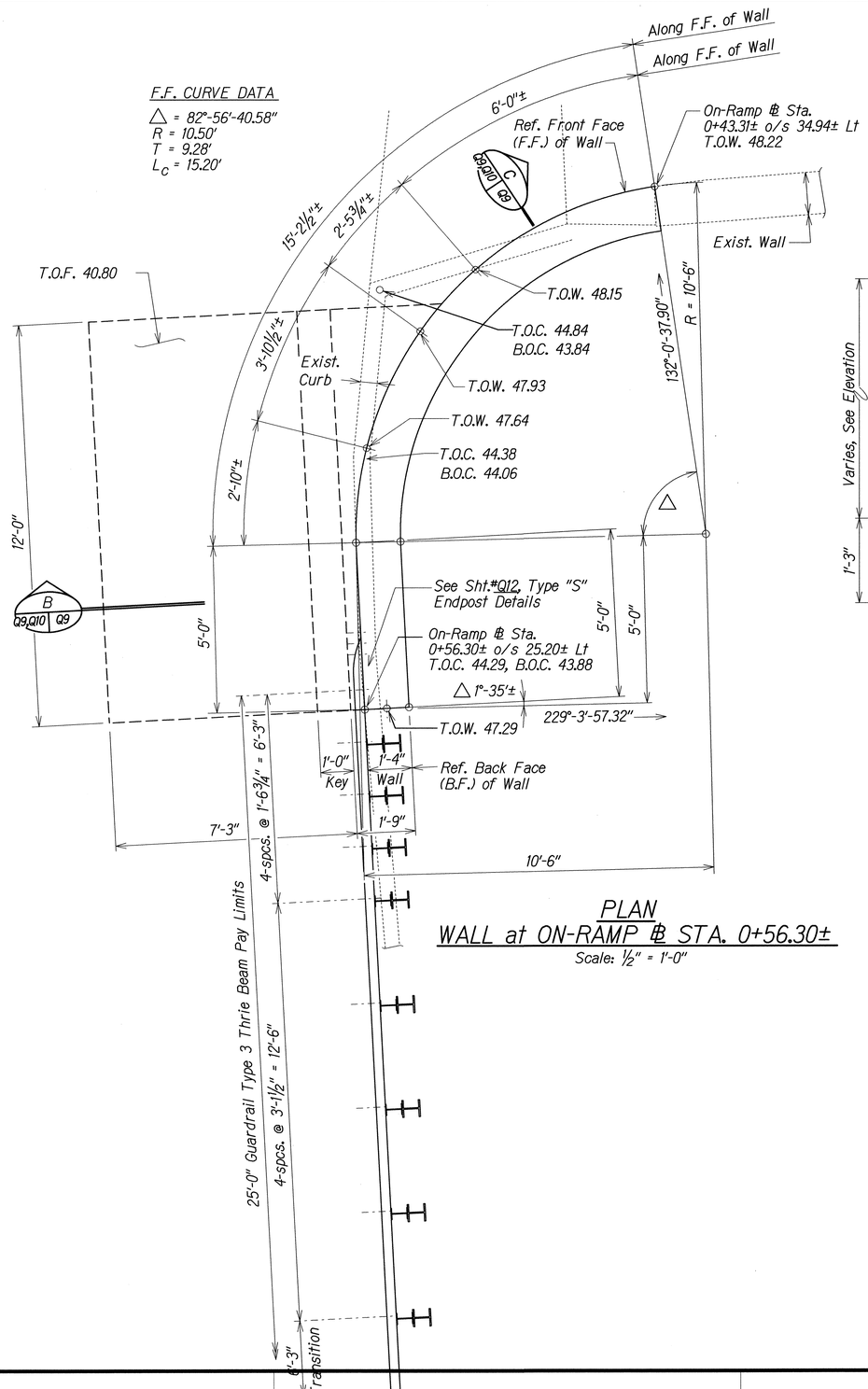

PLAN
WALL at ON-RAMP ℄ STA. 0+56.30±
Scale: ½" = 1'-0"

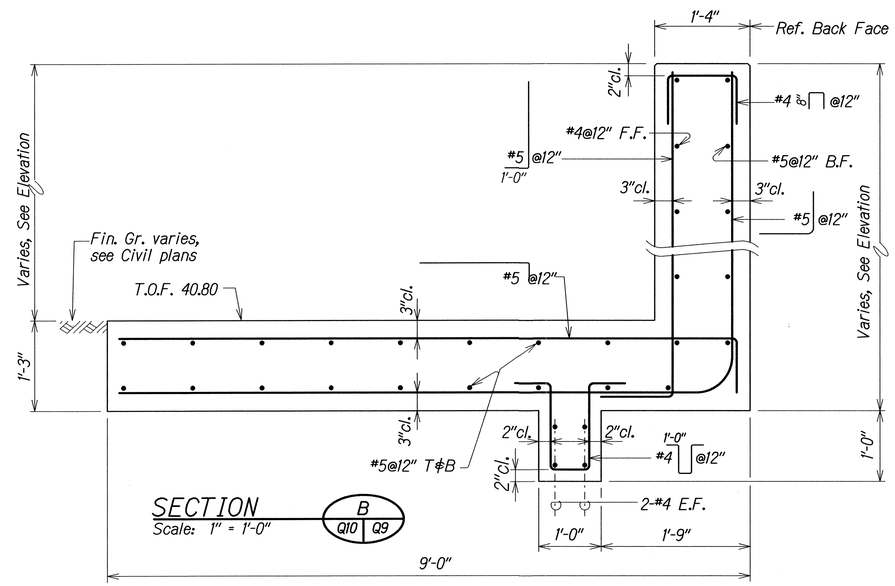

SECTION B Q10 Q9
Scale: 1" = 1'-0"

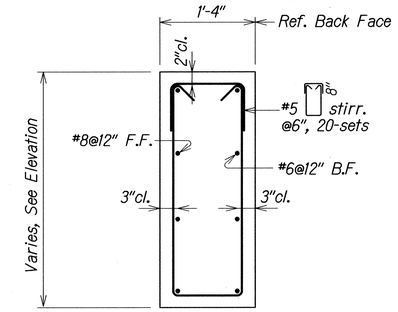

SECTION C Q10 Q9
Scale: 1" = 1'-0"

ORIGINAL PLAN	SURVEY PLOTTED BY	DATE
	DRAWN BY	
	TRACED BY	
NOTE BOOK	DESIGNED BY	
	QUANTITIES BY	
	CHECKED BY	

d:\4/d:/usr2/ksq/st/liliha_sep/
Nbosep_q9.dgn

STATE OF HAWAII
DEPARTMENT OF TRANSPORTATION
HIGHWAYS DIVISION

WALL at ON-RAMP ℄ STA. 0+56.30±
LILIHA STREET REHABILITATION
NORTH KING STREET to SCHOOL STREET
Project No. 7413A-01-04M

Scale: As Noted
Date: Dec. 2013

SHEET No. Q9 OF 14 SHEETS

FED. ROAD DIST. NO.	STATE	PROJ. NO.	FISCAL YEAR	SHEET NO.	TOTAL SHEETS
HAWAII	HAW.	7413A-01-04M	2014	58	62

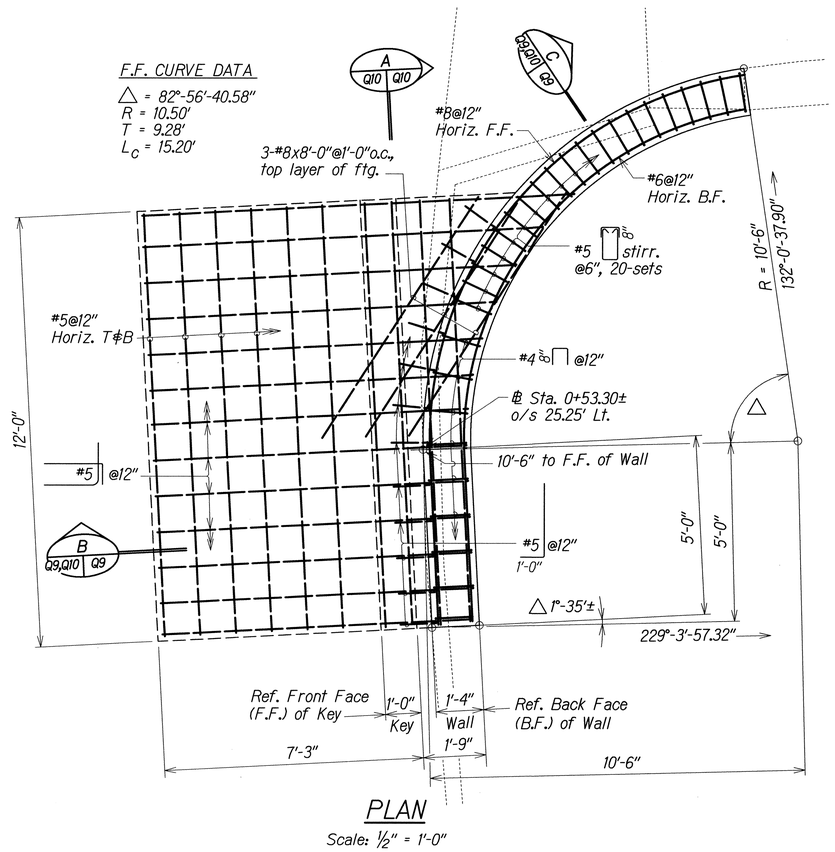

PLAN

Scale: ½" = 1'-0"

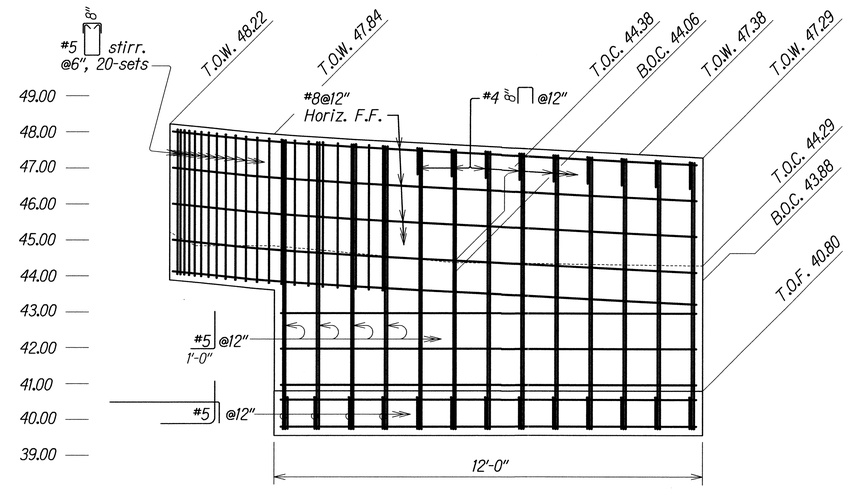

ELEVATION

Scale: ½" = 1'-0"

A
Q10 Q10

ORIGINAL PLAN	SURVEY PLOTTED BY	DATE
	DRAWN BY	
	TRACED BY	
NOTE BOOK	DESIGNED BY	
	QUANTITIES BY	
	CHECKED BY	

db4/d7/usr2/ksq/s1/lliha_sep/
Nthrsep_q10.dgn

STATE OF HAWAII
DEPARTMENT OF TRANSPORTATION
HIGHWAYS DIVISION

WALL at ON-RAMP ℄ STA. 0+56.30±

LILIHA STREET REHABILITATION
NORTH KING STREET to SCHOOL STREET

Project No. 7413A-01-04M

Scale: As Noted

Date: Dec. 2013

SHEET No. Q10 OF 14 SHEETS

FED. ROAD DIST. NO.	STATE	PROJ. NO.	FISCAL YEAR	SHEET NO.	TOTAL SHEETS
HAWAII	HAW.	7413A-01-04M	2014	59	62

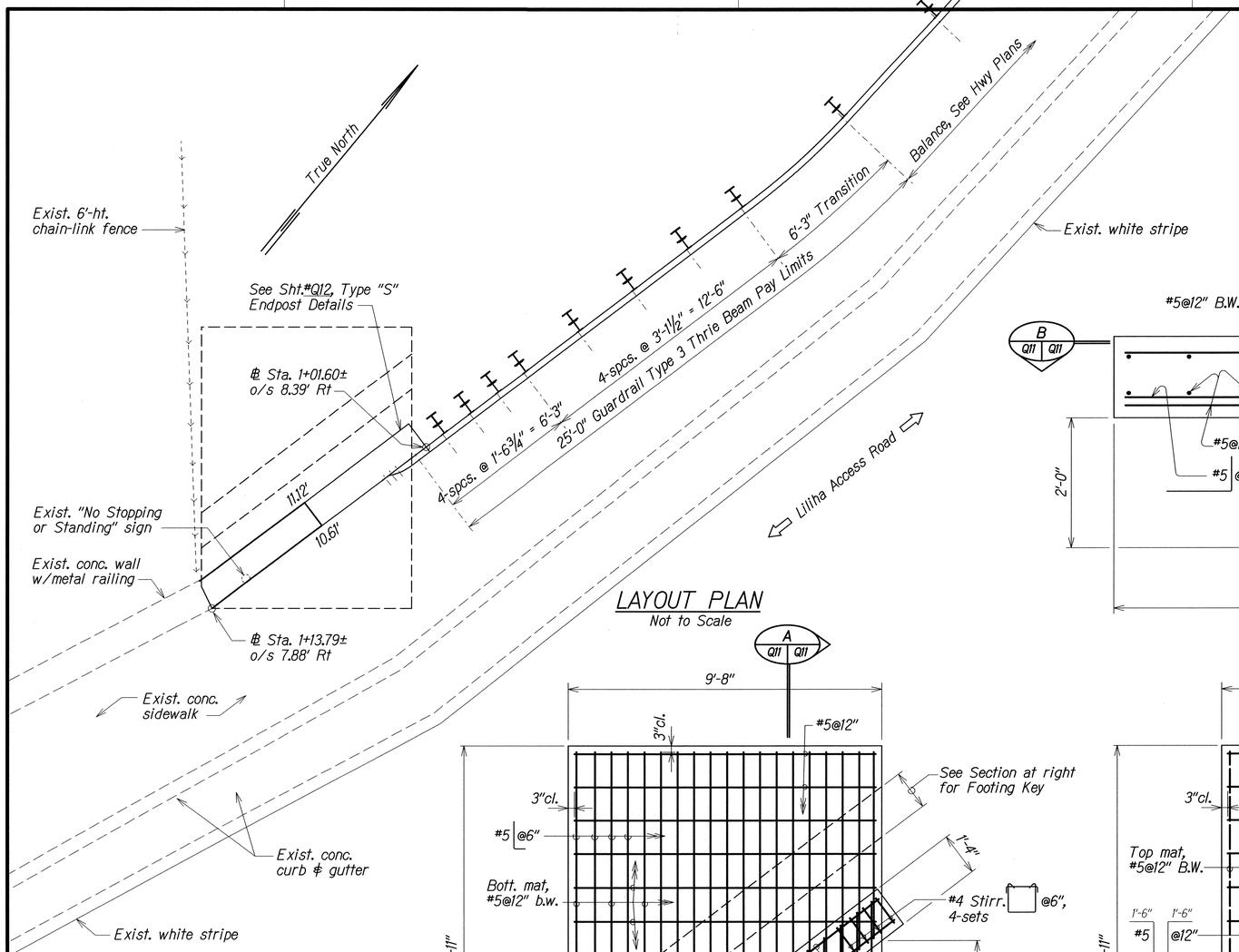

LAYOUT PLAN

Not to Scale

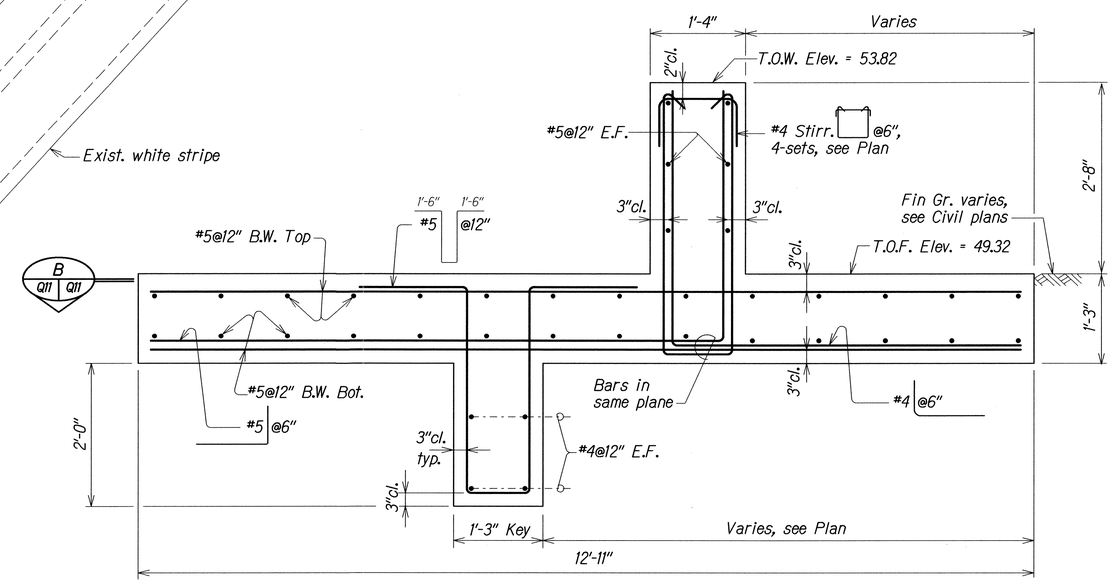

TYPICAL SECTION

Scale: 1" = 1'-0"

A Q11 Q11

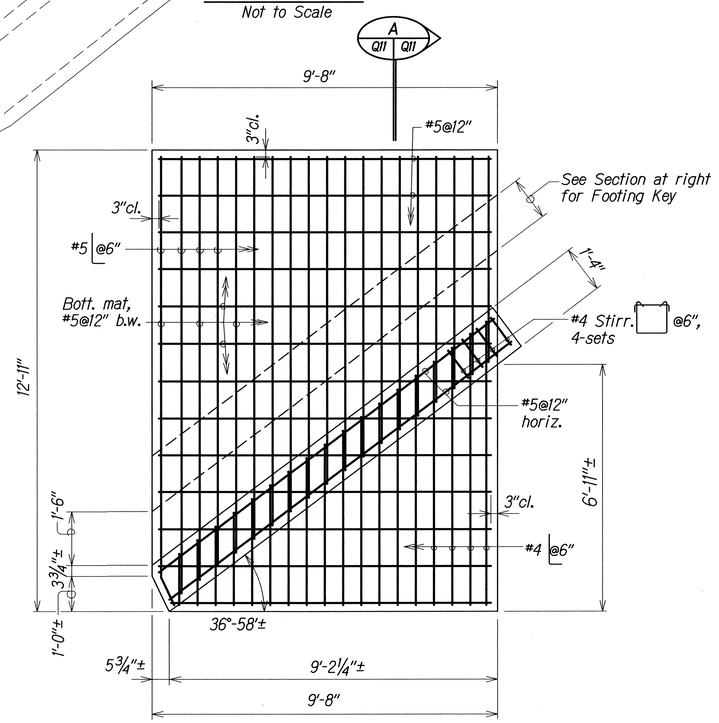

PLAN

SHOWING WALL AND FOOTING BOTTOM MAT REINFORCING

Scale: ½" = 1'-0"

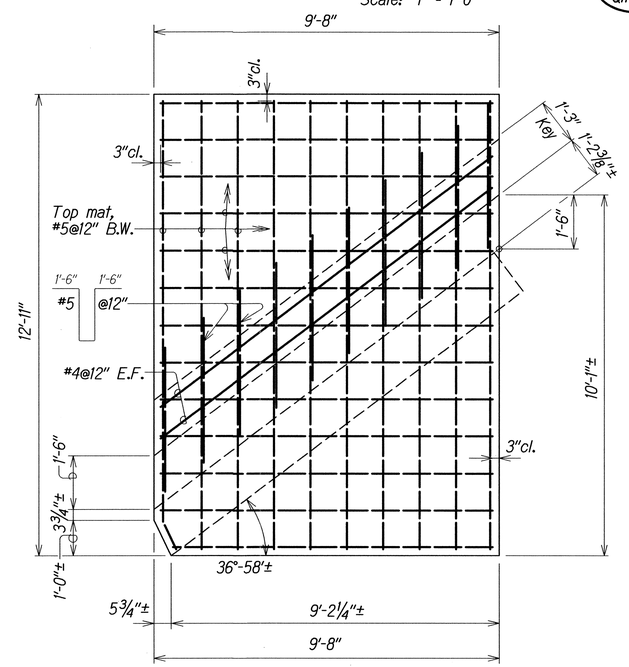

SECTION

SHOWING KEY AND FOOTING TOP MAT REINFORCING

Scale: ½" = 1'-0"

B Q11 Q11

STATE OF HAWAII
DEPARTMENT OF TRANSPORTATION
HIGHWAYS DIVISION

WALL at LILIHA ACCESS ROAD STA. 1+13.79±

LILIHA STREET REHABILITATION
NORTH KING STREET to SCHOOL STREET
Project No. 7413A-01-04M

Scale: As Noted — Date: Dec, 2013

SHEET No. Q11 OF 14 SHEETS

ORIGINAL PLAN	SURVEY PLOTTED BY	DATE
	PLANS BY	
	TRACED BY	
NOTE BOOK	DESIGNED BY	
	QUANTITIES BY	
	CHECKED BY	

d:\4/d-/usr2/ksyl/st/liliha_sep/
Nihosep_q11.dgn

DOT Reply Plan Sheet 6 1/6/2017

FED. ROAD DIST. NO.	STATE	PROJ. NO.	FISCAL YEAR	SHEET NO.	TOTAL SHEETS
HAWAII	HAW.	7413A-01-04M	2014	60	62

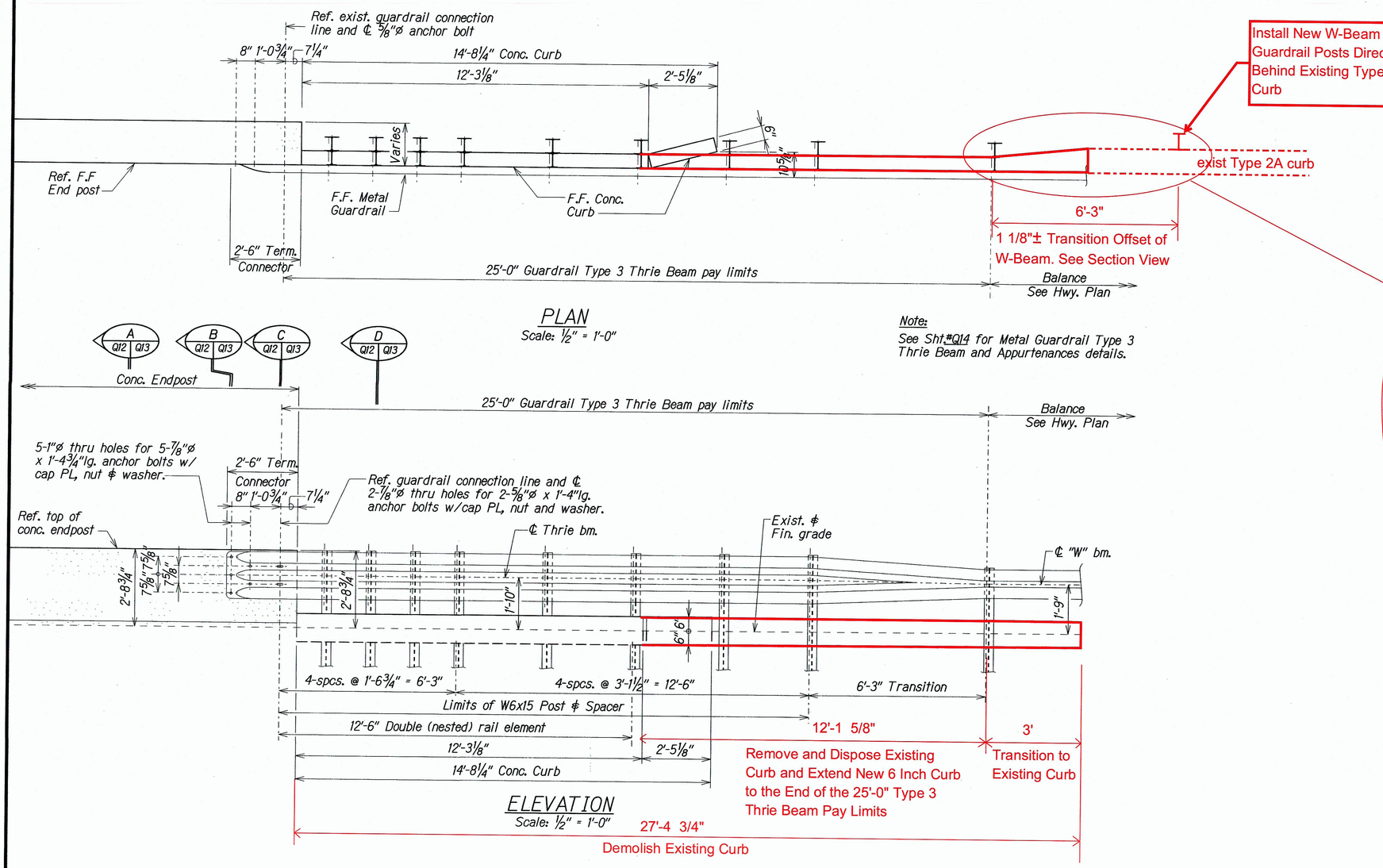

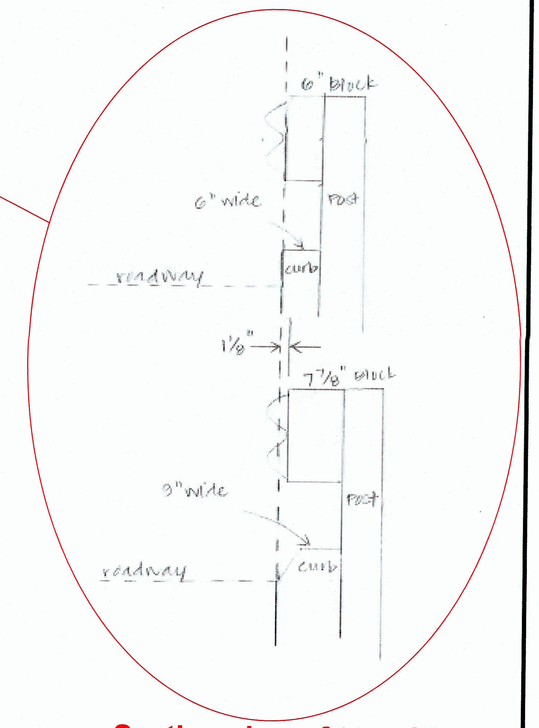

Section view of transition from 6" curb to existing Type 2A curb

TYPE "S" ENDPOST PLAN and ELEVATION

ORIGINAL PLAN	SURVEY PLOTTED BY	DATE
	DRAWN BY	
	TRACED BY	
NOTE BOOK	DESIGNED BY	
	QUANTITIES BY	
	CHECKED BY	

dh4/usr2/ksg/sf/lilha_sep/

AS-BUILT DRAWINGS

This certifies that the dimensions and details shown on this sheet reflect the dimensions and details, and specifications as constructed in the field.

KAIKOR CONSTRUCTION CO., INC.

DATE: 10/9/20

STATE OF HAWAII
DEPARTMENT OF TRANSPORTATION
HIGHWAYS DIVISION

TYPE "S" ENDPOST PLAN & ELEVATION
LILIHA STREET REHABILITATION
NORTH KING STREET to SCHOOL STREET
Project No. 7413A-01-04M

Scale: As Noted
Date: Dec. 2013

SHEET No. Q12 OF 14 SHEETS

"AS-BUILT"

FED. ROAD DIST. NO.	STATE	PROJ. NO.	FISCAL YEAR	SHEET NO.	TOTAL SHEETS
HAWAII	HAW.	7413A-01-04M	2014	61	62

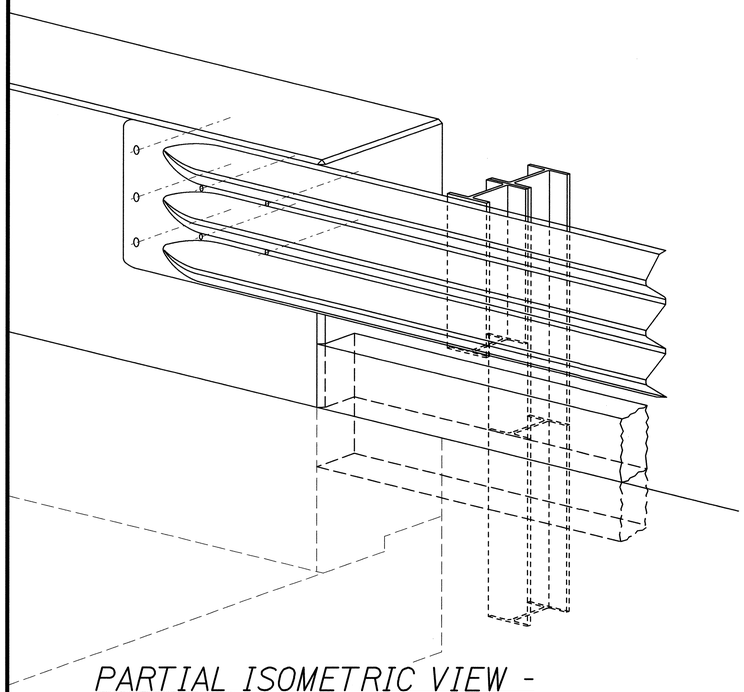

PARTIAL ISOMETRIC VIEW - TYPE "S" ENDPOST

Not to Scale

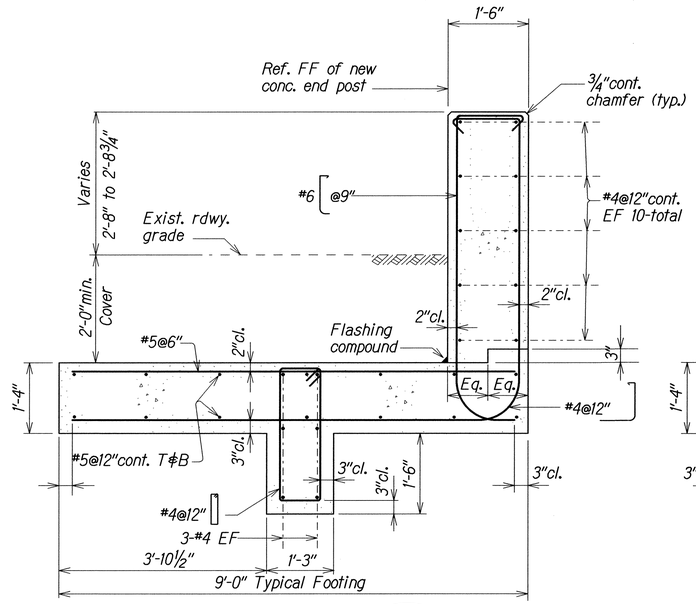

SECTION A (Q12 | Q13)

Scale: 3/4" = 1'-0"

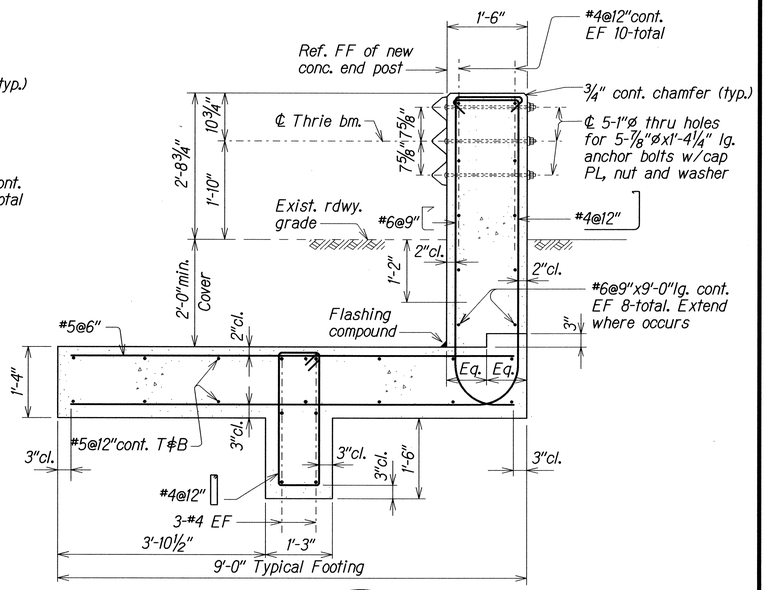

SECTION B (Q12 | Q13)

Scale: 3/4" = 1'-0"

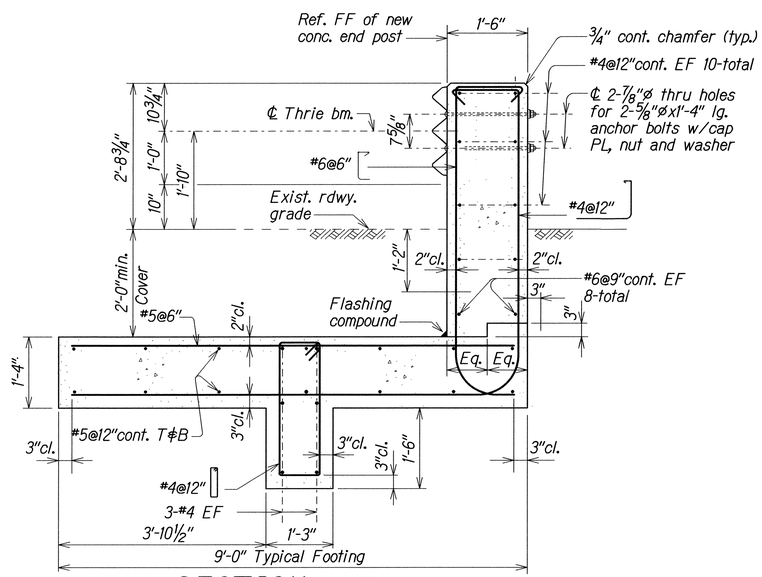

SECTION C (Q12 | Q13)

Scale: 3/4" = 1'-0"

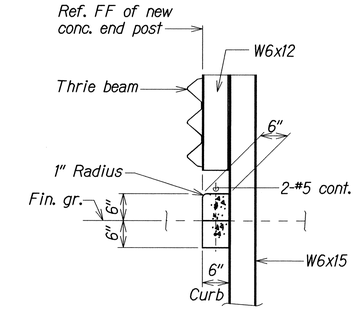

SECTION D (Q12 | Q13)

Scale: 3/4" = 1'-0"

TYPICAL SECTIONS - ENDPOST UPGRADE DETAILS

ORIGINAL PLAN	SURVEY PLOTTED BY	DATE
	DRAWN BY	
	TRACED BY	
NOTE BOOK	DESIGNED BY	
	QUANTITIES BY	
	CHECKED BY	

db4/usr2/ksq/s1/liliha_sep/

STATE OF HAWAII
DEPARTMENT OF TRANSPORTATION
HIGHWAYS DIVISION

TYPE "S" ENDPOST PARTIAL ISOMETRIC VIEW and TYPICAL SECTIONS

LILIHA STREET REHABILITATION
NORTH KING STREET to SCHOOL STREET

Project No. 7413A-01-04M

Scale: As Noted — Date: Dec, 2013

SHEET No. Q13 OF 14 SHEETS

FED. ROAD DIST. NO.	STATE	PROJ. NO.	FISCAL YEAR	SHEET NO.	TOTAL SHEETS
HAWAII	HAW.	7413A-01-04M	2014	62	62

NOTES:

A. The work necessary to connect guardrail to concrete end post shall include all labor, materials, tools, equipment and incidentals necessary to complete the work and will not be paid for separately.

B. Lap terminal connector and rail element in direction of traffic to prevent snagging.

C. All anchor bolts shall be high strength bolts conforming to the requirements of ASTM 325 and Standard Specification, Section 713.04.

D. Anchor bolt length shall be such that a snug fit of the elements and full thread engagement plus 1/4" (max) is attained.

E. "Terminal Connector", "Transition Section" and thrie beam shall be fabricated from 10gauge steel conforming to the requirements of AASHTO M 180, Type II, Class B.

F. "Terminal Connector" and standard spacer, including all anchor bolts, cap PL, nuts and washers, shall be hot-dip galvanized after fabrication.

G. Cap PL shall be fabricated from ASTM A 36.

H. First 25'-0" of guardrail adjoining "Terminal Connector" shall be galvanized steel and supports spaced as shown on the detail drawings. This section of rail shall be placed on tangent to end post or parallel to roadway, unless conditions at site renders it impossible to do so. Flare point to be determined in field.

I. Double (nest 1st panel) thrie beam elements at all end post connections, except on highways with one-way traffic pattern, use single thrie beam elements at end post on trailing end only.

J. Where double (nested) beam occur, 12" "Back-up Plate" not required.

K. Heads of through anchor bolts shall be placed on the traffic side of the rail.

L. All steel shapes, rails and plates shall conform to ASTM A 36 specifications.

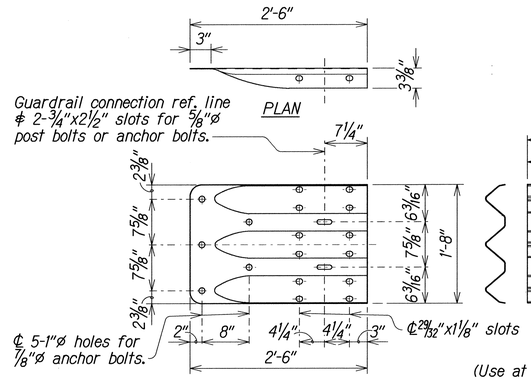

TERMINAL CONNECTOR
Scale: 1" = 1'-0"

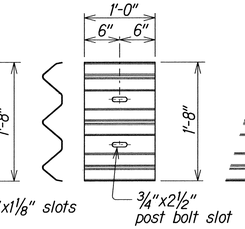

(Use at posts where splices do not occur.)

BACKUP PLATE
Scale: 1" = 1'-0"

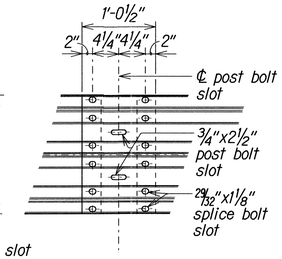

RAIL SPLICE
Scale: 1" = 1'-0"

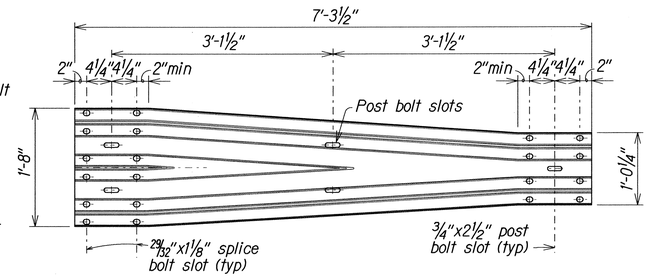

TRANSITION SECTION
Scale: 1" = 1'-0"

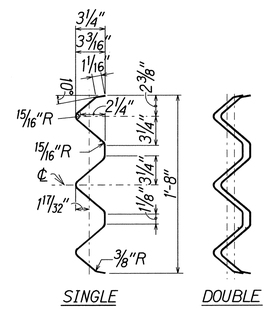

SECTION THRU RAIL ELEMENT
Scale: 1 1/2" = 1'-0"

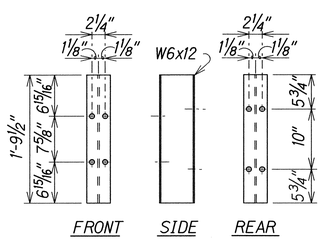

SPACER BLOCK DETAILS
Scale: 1" = 1'-0"

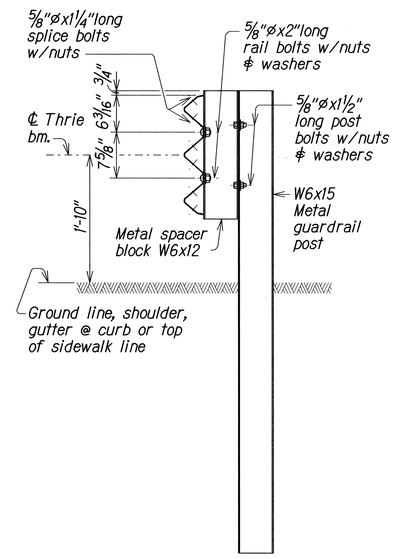

TYPICAL SECTION
METAL GUARDRAIL ON METAL POST WITH METAL SPACER BLOCK
Scale: 1" = 1'-0"

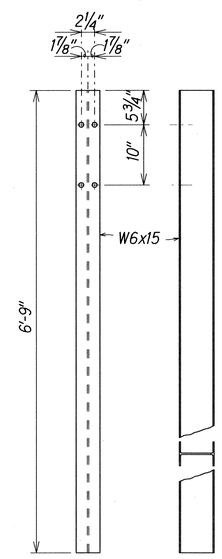

POST DETAILS
Scale: 1" = 1'-0"

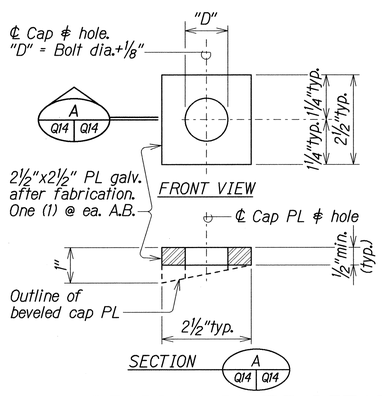

CAP (BEARING) PLATE DETAIL
Scale: 6" = 1'-0"

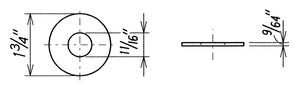

STEEL WASHER FOR 5/8"ø BOLT
Scale: 6" = 1'-0"

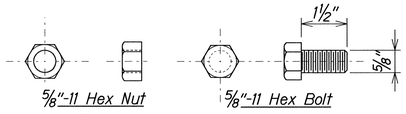

5/8"ø HEX BOLT & NUT
Scale: 6" = 1'-0"

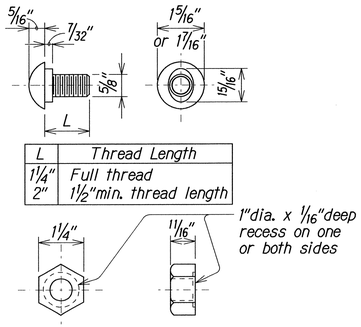

L	Thread Length
1 1/4"	Full thread
2"	1 1/2"min. thread length

5/8"ø BUTTON HEAD BOLT & RECESS NUT
Scale: 6" = 1'-0"

METAL GUARDRAIL TYPE 3 THRIE BEAM AND APPURTENANCES DETAILS

ORIGINAL PLAN	SURVEY PLOTTED BY	DATE
	DRAWN BY	
	TRACED BY	
NOTE BOOK	DESIGNED BY	
	QUANTITIES BY	
	CHECKED BY	

d:\d-drive\usr2\ksg\sf\lilha_sep\

STATE OF HAWAII
DEPARTMENT OF TRANSPORTATION
HIGHWAYS DIVISION

METAL GUARDRAIL TYPE 3 THRIE BEAM and APPURTENANCES DETAILS

LILIHA STREET REHABILITATION
NORTH KING STREET to SCHOOL STREET
Project No. 7413A-01-04M

Scale: As Noted — Date: Dec, 2013

SHEET No. Q14 OF 14 SHEETS

FED. ROAD DIST. NO.	STATE	PROJ. NO.	FISCAL YEAR	SHEET NO.	TOTAL SHEETS
HAWAII	HAW.	7413A-01-04M	2014	C.O. 62 S-1	62

LANDSCAPE NOTES:

1. Contractor shall field verify all plant quantities and dimensions prior to installation. Quantities shown on Plant List are for reference only. Verify actual quantities shown on plans. If there is a discrepancy, the planting plans shall take precedence.
2. Contractor shall be responsible for locating and protecting existing utilities.
3. Do not plant until ground has been prepared and free of stones greater than ½" diameter, site is neat, orderly, and the Engineer accepts site for planting.
4. Notify Engineer of any discrepencies in plant locations or insufficient plant quantities due to difference in plan and actual field conditions.
5. Notify Engineer 90 days prior to planting operations for approvel of all plant material at place of growth. All plant material not approved by the engineer will be subject to rejection.
6. The Engineer will inspect plants at the place of growth before and after the delivery to the project, each tree shall be tagged by engineer with a consectively numbered plastic tamper resistant and self-locking seal. Seals shall remain on trees and only be removed by the Engineer at the completion of the plant establishment period. Trees delivered to the project without the Engineer's seal will be rejected.
7. Contractor shall be solely responsible for the complete removal and damages resulting from the introduction of planting any plant species listed on the Hawaii Department Agriculture 'Noxious Rules' as defined in the Statute, Hawaii Administrative Rules 4;68:1 or the 'Federal Noxious Weed List' as defined in Title 7 of the Code of Federal Regulations, Parts 360 and 361.
8. All tree work must adhere to America National Standard Institute (or ANSI - A300- Tree Care Standards and ANSI - Z133 Safety Standards for Tree Work). Work shall be contracted to Arborists that has been cerified in good standings as an ISA Cerified Arborists for at least 5 years to assure that tree work is performed properly and trees are not damaged by practices such as topping, flush cuts, over-thinning or climbing with spikes, Contractor shall submit a copy of the ISA Arborist Certificate of Good Standing of 1 years to the Engineer a minimum of 7 days prior to tree pruning.
9. For the duration of construction within the drip line of trees to remain, there must be: no changes, alternations or disturbances to the grade by adding fill, excavating or scraping except as noted on plans; no storage of construction material or equipment; no stockpiling of any construction material or any excavated material no disposal of any liquids (e.g. concrete, sleuth, gas, oil, paint); no vehicular traffic, equipment or excessive pedestrian traffic; no attachment of any wires, ropes, lights, or any other such attachment other than those of protective nature to any tree to be preserved; and no cleaning of equipment or material under the canopy of any tree or group of trees to remain.
10. If trees other than those specifically designated for removal are damaged beyond survival conditions as determined by the Engineer, the Contractor shall remove such trees and replace the tree with a same species and size and maintain for the duration of construction or 12 months whichever is greater at no cost to the State.
11. The Contractor shall install a temporary irrigation system until completion of the planting period and acceptance by the Engineer. The Contractor shall be responible for locating water source and determining an appropriate point of connection. The cost of water is to be considered as incidental to the project budget.
12. Guy wire, stakes, windbreakers, etc. shall be maintained and replaced by the contractor until the tree can stand on its own. The Contractor shall remove and dispose at the end of the plant establishment period after acceptance by the Engineer.
13. If existing overhead utilities are above the tree, adjust the two trees so that the power lines are 10.0' away from the center of the trunk. Trees must remain in a staggered pattern. If adjustments are to be made, then the adjustment should be made parallel to the roadway (not up or down the slope) and the trunks must be 10.0' from the newly installed GRP area.
14. Follow State DOT Standard Plans L-02 Tree Planting on Slope Detail.

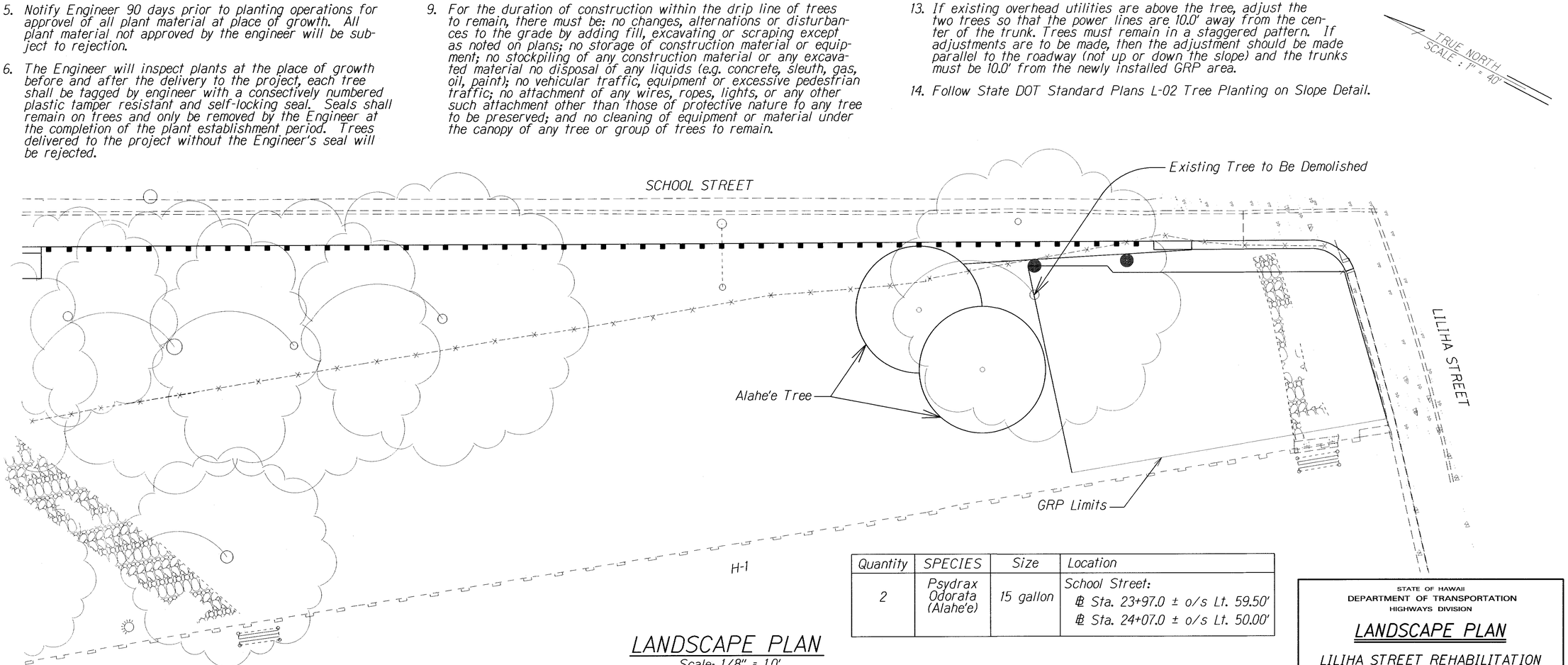

Quantity	SPECIES	Size	Location
2	Psydrax Odorata (Alahe'e)	15 gallon	School Street: ℄ Sta. 23+97.0 ± o/s Lt. 59.50' ℄ Sta. 24+07.0 ± o/s Lt. 50.00'

LANDSCAPE PLAN

Scale: 1/8" = 1.0'

DATE	REVISION
2/28/17	Added new sheet, removal of one tree and planting of two new trees.

STATE OF HAWAII
DEPARTMENT OF TRANSPORTATION
HIGHWAYS DIVISION

LANDSCAPE PLAN

LILIHA STREET REHABILITATION
North King Street to School Street
Project No. 7413A-01-04M

Scale: 1/8" = 1.0' Date: April, 2014

SHEET No. 1 OF 1 SHEETS

ORIGINAL PLAN	SURVEY PLOTTED BY	DATE
	DRAWN BY	
	TRACED BY	
NOTE BOOK	DESIGNED BY	
	QUANTITIES BY	
N.	CHECKED BY	

C.O. 62 S-1

FED. ROAD DIST. NO.	STATE	PROJ. NO.	FISCAL YEAR	SHEET NO.	TOTAL SHEETS
HAWAII	HAW.	7413A-01-04M	2014	C.O. 62 S-2	62

LANDSCAPE NOTES:

1. Contractor shall field verify all plant quantities and dimensions prior to installation. Quantities shown on Plant List are for reference only. Verify actual quantities shown on plans. If there is a discrepancy, the planting plans shall take precedence.
2. Contractor shall be responsible for locating and protecting existing utilities.
3. Do not plant until ground has been prepared and free of stones greater than ½" diameter, site is neat, orderly, and the Engineer accepts site for planting.
4. Notify Engineer of any discrepencies in plant locations or insufficient plant quantities due to difference in plan and actual field conditions.
5. Notify Engineer 90 days prior to planting operations for approvel of all plant material at place of growth. All plant material not approved by the engineer will be subject to rejection.
6. The Engineer will inspect plants at the place of growth before and after the delivery to the project, each tree shall be tagged by engineer with a consectively numbered plastic tamper resistant and self-locking seal. Seals shall remain on trees and only be removed by the Engineer at the completion of the plant establishment period. Trees delivered to the project without the Engineer's seal will be rejected.
7. Contractor shall be solely responsible for the complete removal and damages resulting from the introduction of planting any plant species listed on the Hawaii Department Agriculture 'Noxious Rules' as defined in the Statute, Hawaii Administrative Rules 4;68;1 or the 'Federal Noxious Weed List' as defined in Title 7 of the Code of Federal Regulations, Parts 360 and 361.
8. All tree work must adhere to America National Standard Institute (or ANSI - A300- Tree Care Standards and ANSI - Z133 Safety Standards for Tree Work). Work shall be contracted to Arborists that has been cerified in good standings as an ISA Cerified Arborists for at least 5 years to assure that tree work is performed properly and trees are not damaged by practices such as topping, flush cuts, over-thinning or climbing with spikes, Contractor shall submit a copy of the ISA Arborist Certificate of Good Standing of 1 years to the Engineer a minimum of 7 days prior to tree pruning.
9. For the duration of construction within the drip line of trees to remain, there must be: no changes, alternations or disturbances to the grade by adding fill, excavating or scraping except as noted on plans; no storage of construction material or equipment; no stockpiling of any construction material or any excavated material no disposal of any liquids (e.g. concrete, sleuth, gas, oil, paint); no vehicular traffic, equipment or excessive pedestrian traffic; no attachment of any wires, ropes, lights, or any other such attachment other than those of protective nature to any tree to be preserved; and no cleaning of equipment or material under the canopy of any tree or group of trees to remain.
10. If trees other than those specifically designated for removal are damaged beyond survival conditions as determined by the Engineer, the Contractor shall remove such trees and replace the tree with a same species and size and maintain for the duration of construction or 12 months whichever is greater at no cost to the State.
11. The Contractor shall install a temporary irrigation system until completion of the planting period and acceptance by the Engineer. The Contractor shall be responible for locating water source and determining an appropriate point of connection. The cost of water is to be considered as incidental to the project budget.
12. Guy wire, stakes, windbreakers, etc. shall be maintained and replaced by the contractor until the tree can stand on its own. The Contractor shall remove and dispose at the end of the plant establishment period after acceptance by the Engineer.
13. If existing overhead utilities are above the tree, adjust the two trees so that the power lines are 10.0' away from the center of the trunk. Trees must remain in a staggered pattern. If adjustments are to be made, then the adjustment should be made parallel to the roadway (not up or down the slope) and the trunks must be 10.0' from the newly installed GRP area.
14. Follow State DOT Standard Plans L-02 Tree Planting on Slope Detail.

25+00

TRUE NORTH
SCALE : 1" = 40'

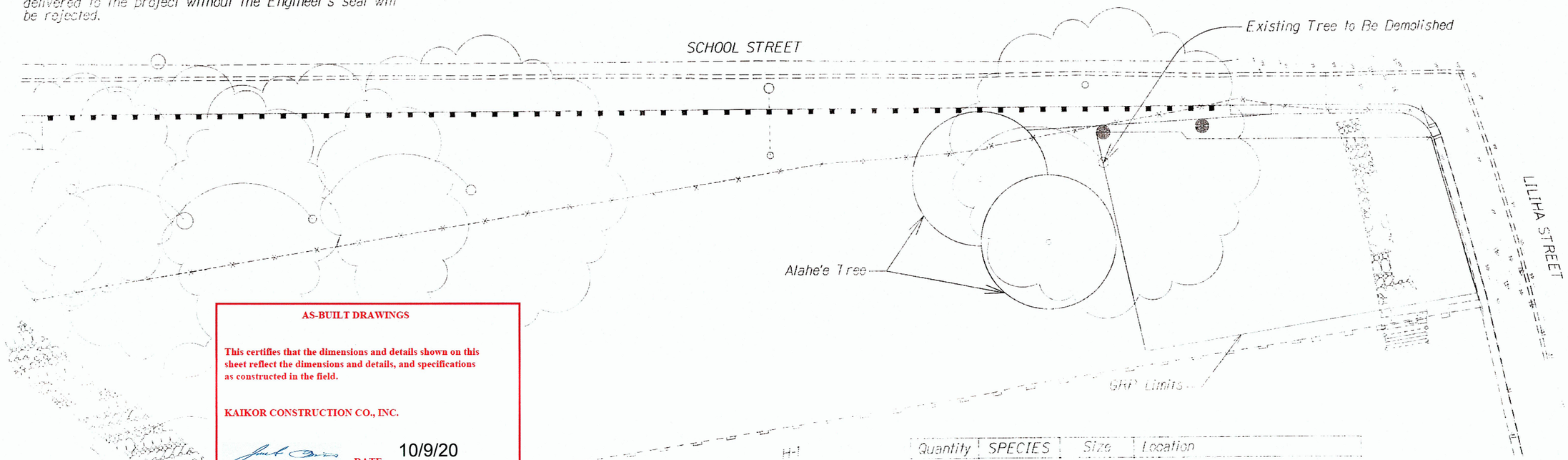

AS-BUILT DRAWINGS

This certifies that the dimensions and details shown on this sheet reflect the dimensions and details, and specifications as constructed in the field.

KAIKOR CONSTRUCTION CO., INC.

DATE: 10/9/20

Quantity	SPECIES	Size	Location
2	Fsydrax Odorata (Alahe'e)	15 gallon	School Street: @ Sta. 23+97.0 ± o/s Lt. 59.50' @ Sta. 24+07.0 ± o/s Lt. 50.00'

LANDSCAPE PLAN

Scale: 1/8" = 1.0'

DATE	REVISION
2/28/17	Added new sheet, removal of one tree and planting of two new trees.

STATE OF HAWAII
DEPARTMENT OF TRANSPORTATION
HIGHWAYS DIVISION

LANDSCAPE PLAN

LILIHA STREET REHABILITATION
North King Street to School Street
Project No. 7413A-01-04M

Scale: 1/8" = 1.0' Date: April, 2014

SHEET No. 1 OF 1 SHEETS

C.O. 62 S-2

ORIGINAL PLAN	SURVEY PLOTTED BY	DATE
	DRAWN BY	
NOTE BOOK	TRACED BY	
	DESIGNED BY	
	QUANTITIES BY	
No.	CHECKED BY	

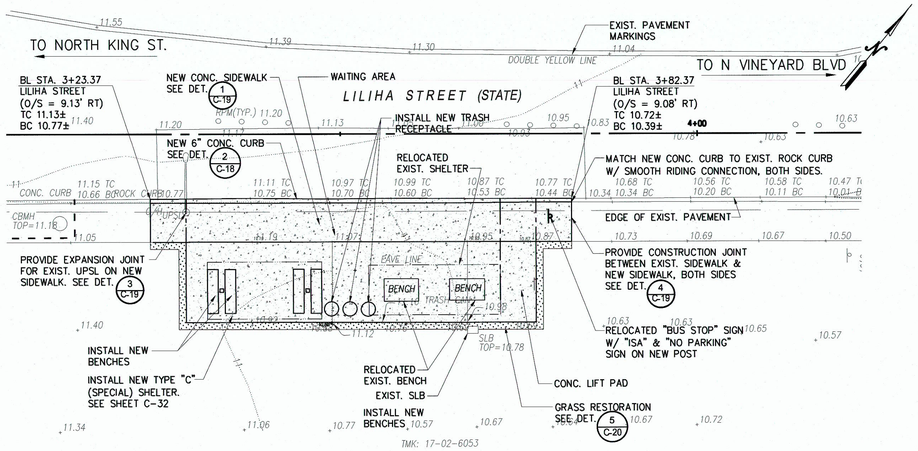

1 C-15 BUS STOP #0053- BUS STOP PLAN
SCALE: 1" = 10'

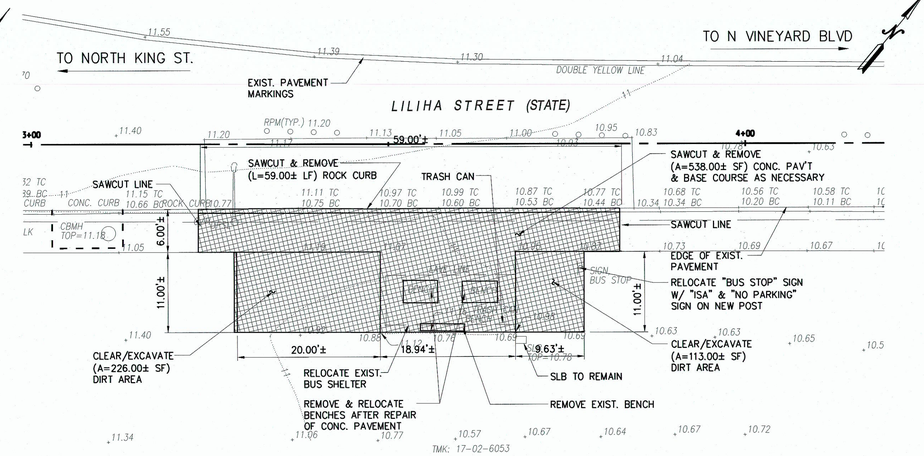

2 C-15 BUS STOP #0053- DEMOLITION PLAN
SCALE: 1" = 10'

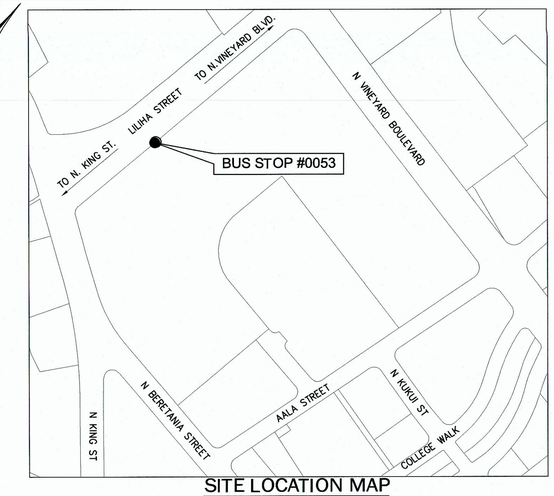

SITE LOCATION MAP
NOT TO SCALE

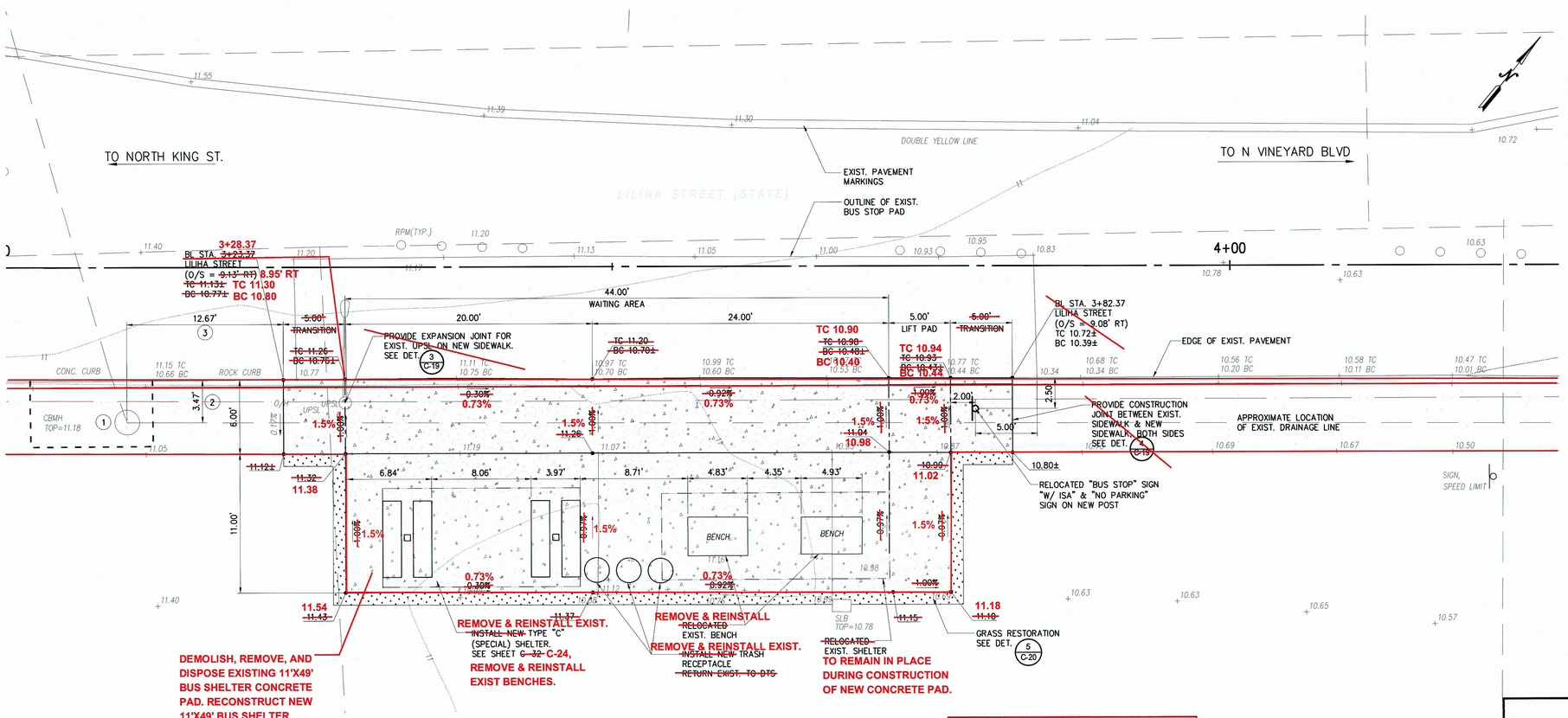

3 C-15 BUS STOP #0053 - GRADING PLAN
SCALE: 1" = 5'

LEGEND:

- EXIST. DRAINAGE LINE
- LIMITS OF WORK
- PROPERTY LINE
- BENCH TRAVERSE
- BUS STOP SHELTER OUTLINE
- CONC. LIFT PAD & WAITING AREA OUTLINE
- BENCHMARK
- BUS STOP SIGN
- 90.00± SPOT ELEVATION (EXIST.)
- 80.00 SPOT ELEVATION (FINISH)
- 0.75% SLOPE
- EXIST. CONC. PAVEMENT
- NEW CONC. PAVEMENT/RAISED CURB
- EXIST. CONC. PAVEMENT/AC TO BE DEMOLISHED/REMOVED
- EXIST. CONC. CURB

CONTROL POINT DIMENSION NOTES:

1. CONTROL POINT AT EXIST. CBMH.
2. FROM CONTROL POINT MEASURED PERPENDICULAR TO EXIST. ROCK CURB ALONG LILIHA STREET (STATE).
3. FROM CONTROL POINT MEASURED PARALLEL TO EXIST. ROCK CURB ALONG LILIHA STREET (STATE).

NOTES:

1. SEE DCAB NOTES, SHEET C-3. FOR ADA BUS STOP COMPLIANCE, THE MAXIMUM LIFT PAD, WAITING AREA AND ACCESSIBLE PEDESTRIAN ROUTE SLOPES SHOWN ON THE TYPICAL DETAIL SHEET SHALL GOVERN OVER THE CALCULATED SLOPES SHOWN ON THE PLANS, UNLESS A TECHNICAL INFEASIBILITY (TI) STATEMENT HAS BEEN FILED.
2. NOTIFY THE ENGINEER IMMEDIATELY IF FIELD CONDITIONS PRECLUDE ACHIEVEMENT OF THE INDICATED SLOPE.
3. IF, DURING CURB RECONSTRUCTION, AN OVERLAID CONC. GUTTER IS ENCOUNTERED IN THE FIELD, IT SHALL BE RECONSTRUCTED. CONTRACTOR TO EXPOSE EXISTING CONCRETE GUTTER.
4. INSTALL CATCH BASIN PROTECTION FOR DOWNSTREAM DRAINAGE INLETS. SEE DETAIL 4 C-21

IF THIS DRAWING IS LESS THAN 36" X 24" IT IS A REDUCED PRINT. ADJUST SCALE ACCORDINGLY

AS-BUILT DRAWINGS

This certifies that the dimensions and details shown on this sheet reflect the dimensions and details, and specifications as constructed in the field.

KAIKOR CONSTRUCTION CO., INC.

DATE: 7/27/20

GRAPHICAL SCALE:

5' 0 5' 10' 15'
SCALE: 1"=5'

10' 0 10' 20' 30'
SCALE: 1"=10'

TY J. DEMPSEY
LICENSED PROFESSIONAL ENGINEER
No. 12058-C
HAWAII, U.S.A.
Exp. 4/30/14

THIS WORK WAS PREPARED BY ME OR UNDER MY SUPERVISION AND CONSTRUCTION OF THIS PROJECT WILL BE UNDER MY OBSERVATION.

DEPARTMENT OF TRANSPORTATION SERVICES
CITY AND COUNTY OF HONOLULU

BUS STOP ADA ACCESSIBILITY IMPROVEMENTS PHASE VI
(KALIHI TO MILILANI)
HONOLULU, OAHU, HAWAII

BUS STOP #0053
LILIHA ST. & KING ST. (STATE)

DESIGN: RF	APPROVED:		
DRAWN: GD	DIRECTOR, DEPARTMENT OF TRANSPORTATION SERVICES, DTS DATE (FOR WORK WITHIN THE CITY RIGHT OF WAY)		SHEET No. C-15
CHECKED: EL/MY/ET	ADMINISTRATOR, HIGHWAYS DIVISION, DOT DATE (FOR WORK WITHIN THE STATE RIGHT OF WAY)		OF 42 SHEETS
DATE: 03/26/13			
PROJECT NO. 3013.10	FILE ___ DRAW ___ FOLDER ___ NUMBER ___		

"AS-BUILT"

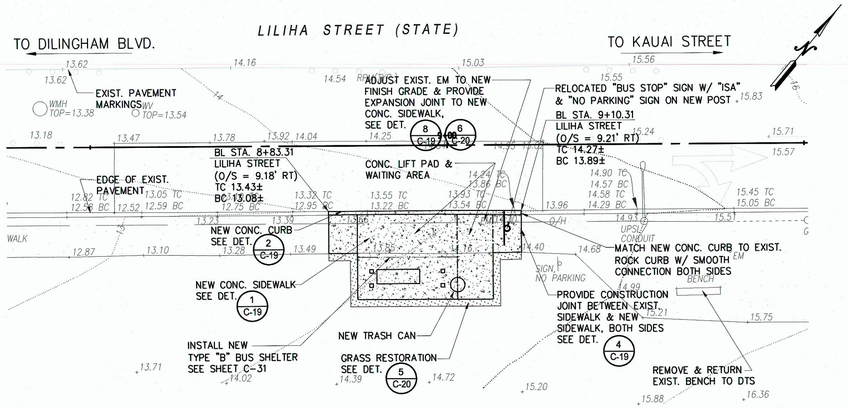

1 C-16 BUS STOP #0054- BUS STOP PLAN
SCALE: 1" = 10'

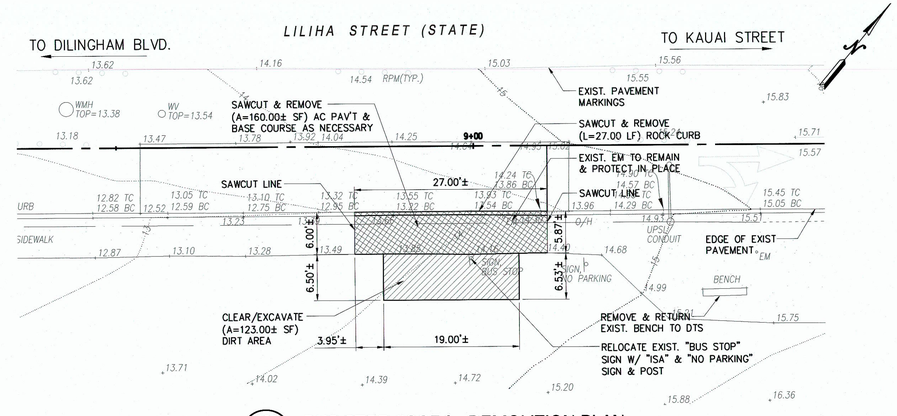

2 C-16 BUS STOP #0054 - DEMOLITION PLAN
SCALE: 1" = 10'

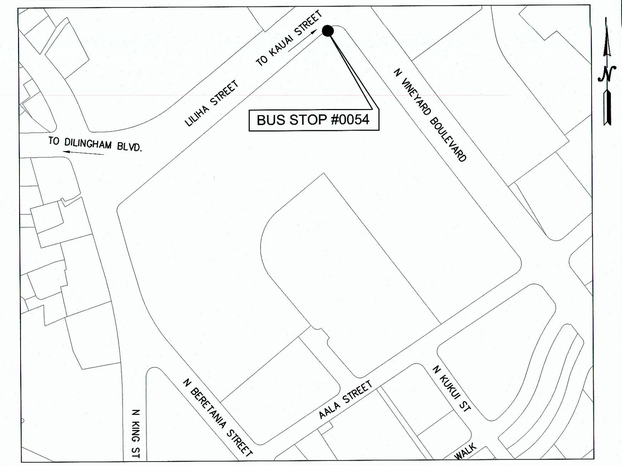

SITE LOCATION MAP
NOT TO SCALE

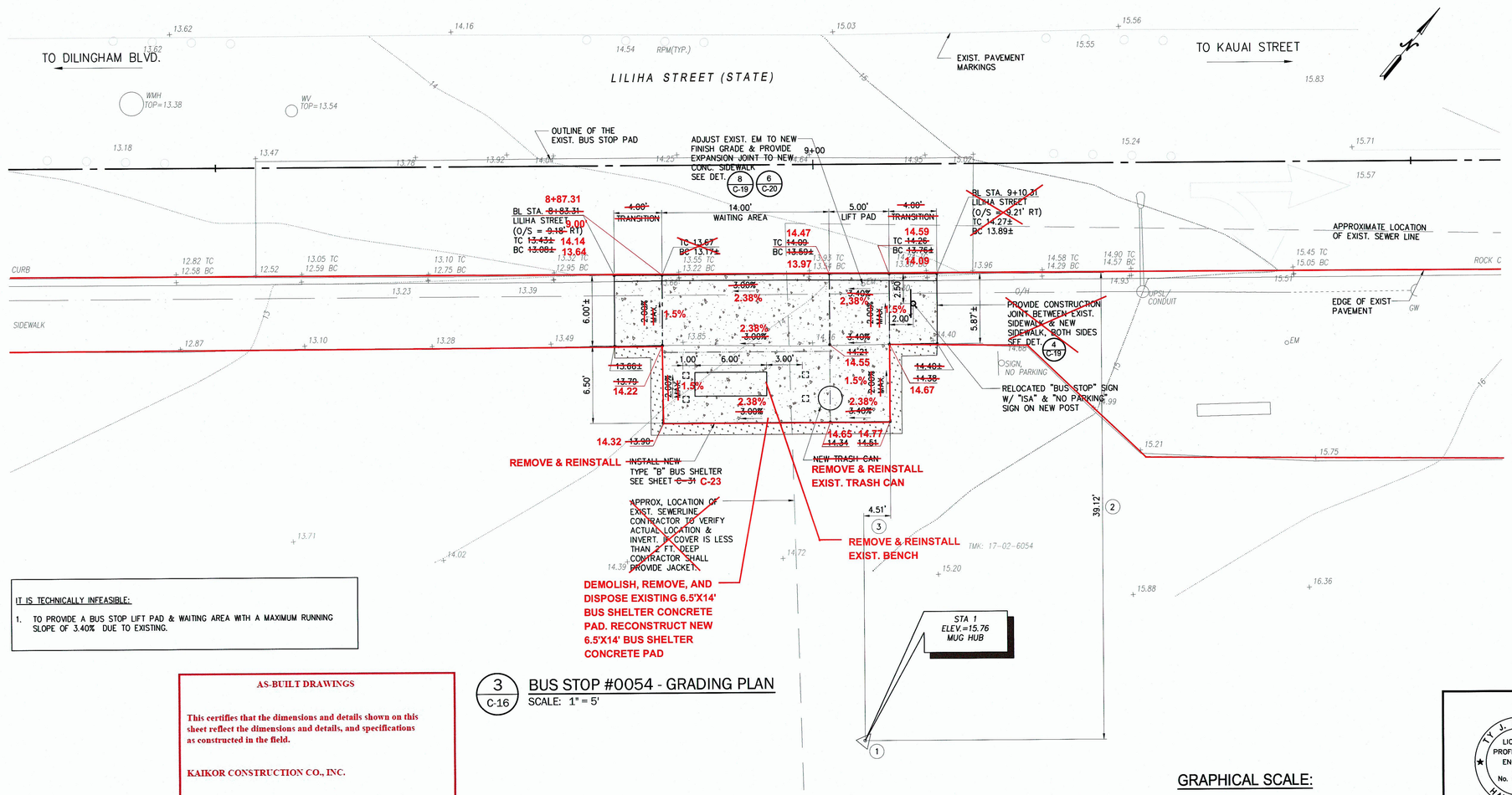

3 C-16 BUS STOP #0054 - GRADING PLAN
SCALE: 1" = 5'

IT IS TECHNICALLY INFEASIBLE:

1. TO PROVIDE A BUS STOP LIFT PAD & WAITING AREA WITH A MAXIMUM RUNNING SLOPE OF 3.40% DUE TO EXISTING.

AS-BUILT DRAWINGS

This certifies that the dimensions and details shown on this sheet reflect the dimensions and details, and specifications as constructed in the field.

KAIKOR CONSTRUCTION CO., INC.

DATE: 7/27/20

IF THIS DRAWING IS LESS THAN 36" X 24" IT IS A REDUCED PRINT. ADJUST SCALE ACCORDINGLY

LEGEND:

- EXIST. SEWER LINE
- LIMITS OF WORK
- PROPERTY LINE
- BENCH TRAVERSE
- BUS STOP SHELTER OUTLINE
- CONC. LIFT PAD & WAITING AREA OUTLINE
- BENCHMARK
- BUS STOP SIGN
- 90.00± SPOT ELEVATION (EXIST.)
- 80.00 SPOT ELEVATION (FINISH)
- 0.75% SLOPE
- EXIST. CONC. PAVEMENT
- NEW CONC. PAVEMENT/RAISED CURB
- EXIST. CONC. PAVEMENT/AC TO BE DEMOLISHED/REMOVED
- EXIST. CONC. CURB

CONTROL POINT DIMENSION NOTES:

1. CONTROL POINT AT "STA. 1" (MUG HUB).
2. FROM CONTROL POINT MEASURED PERPENDICULAR TO EXIST. ROCK CURB ALONG LILIHA STREET (STATE).
3. FROM CONTROL POINT MEASURED PARALLEL TO EDGE OF NEW CONC. SIDEWALK ALONG LILIHA STREET (STATE).

NOTES:

1. SEE DCAB NOTES, SHEET C-3. FOR ADA BUS STOP COMPLIANCE, THE MAXIMUM LIFT PAD, WAITING AREA AND ACCESSIBLE PEDESTRIAN ROUTE SLOPES SHOWN ON THE TYPICAL DETAIL SHEET SHALL GOVERN OVER THE CALCULATED SLOPES SHOWN ON THE PLANS, UNLESS A TECHNICAL INFEASIBILITY (TI) STATEMENT HAS BEEN FILED.
2. NOTIFY THE ENGINEER IMMEDIATELY IF FIELD CONDITIONS PRECLUDE ACHIEVEMENT OF THE INDICATED SLOPE.
3. IF, DURING CURB RECONSTRUCTION, AN OVERLAID CONC. GUTTER IS ENCOUNTERED IN THE FIELD, IT SHALL BE RECONSTRUCTED. CONTRACTOR TO EXPOSE EXISTING CONCRETE GUTTER.
4. INSTALL TEMPORARY STORM DRAIN PROTECTION FOR DOWNSTREAM DRAINAGE INLETS. SEE DETAIL 4 C-21.

GRAPHICAL SCALE:

5' 0 5' 10' 15'
SCALE: 1"=5'

10' 0 10' 20' 30'
SCALE: 1"=10'

TY J. DEMPSEY
LICENSED PROFESSIONAL ENGINEER
No. 12058-C
HAWAII, U.S.A.
Exp. 4/30/14

THIS WORK WAS PREPARED BY ME OR UNDER MY SUPERVISION AND CONSTRUCTION OF THIS PROJECT WILL BE UNDER MY OBSERVATION.

DEPARTMENT OF TRANSPORTATION SERVICES
CITY AND COUNTY OF HONOLULU

BUS STOP ADA ACCESSIBILITY IMPROVEMENTS PHASE VI
(KALIHI TO MILILANI)
HONOLULU, OAHU, HAWAII

BUS STOP #0054
LILIHA ST & VINEYARD BLVD (STATE)

DESIGN:	RF	APPROVED:	
DRAWN:	GD	DIRECTOR, DEPARTMENT OF TRANSPORTATION SERVICES, DTS DATE (FOR WORK WITHIN THE CITY RIGHT OF WAY)	SHEET No. C-16 OF 42 SHEETS
CHECKED:	EL/MY/ET	ADMINISTRATOR, HIGHWAYS DIVISION, DOT DATE (FOR WORK WITHIN THE STATE RIGHT OF WAY)	
DATE:	03/26/13		
PROJECT NO.	3013.10	FILE ___ DRAW ___ FOLDER ___ NUMBER ___	

"AS-BUILT"

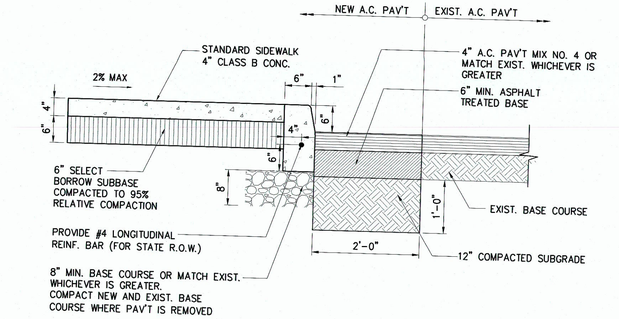

1 C-18 STANDARD CURB W/ A.C. PAVEMENT RESTORATION
SCALE: 3/4" = 1'-0"

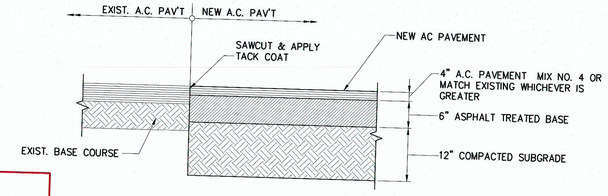

5 C-18 A.C. PAVEMENT CONNECTION
SCALE: 3/4" = 1'-0"

AS-BUILT DRAWINGS

This certifies that the dimensions and details shown on this sheet reflect the dimensions and details, and specifications as constructed in the field.

KAIKOR CONSTRUCTION CO., INC.

DATE: 7/27/20

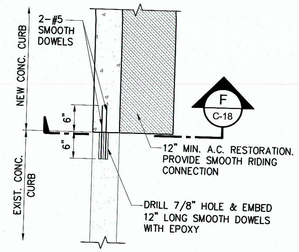

E C-18 PLAN
NOT TO SCALE

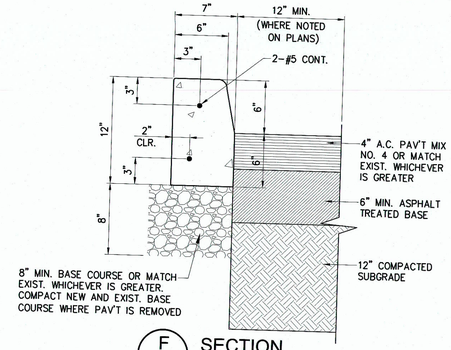

9 C-18 CURB CONNECTION
SCALE: AS SHOWN

F C-18 SECTION
NOT TO SCALE

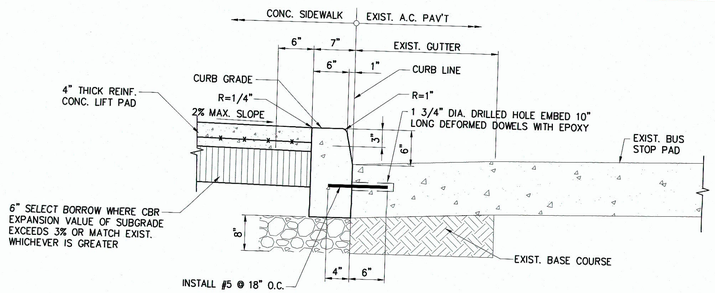

2 C-18 NEW CONC. CURB TO EXISTING CONC. GUTTER CONNECTION DETAIL
SCALE: 1" = 1'-0"

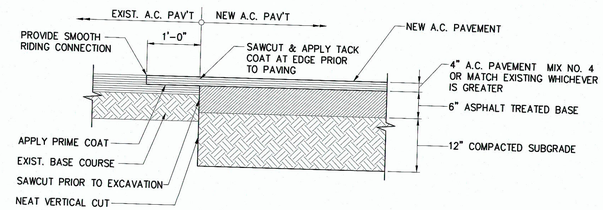

6 C-18 A.C. PAVEMENT CONNECTION (STATE R.O.W.)
SCALE: 3/4" = 1'-0"

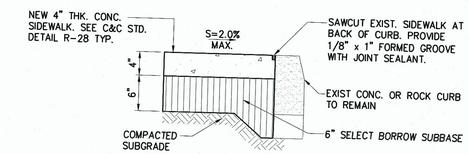

10 C-18 NEW CONC. SIDEWALK TO EXIST CONC. CURB OR ROCK CURB CONNECTION DETAIL
SCALE: 1" = 1'-0"

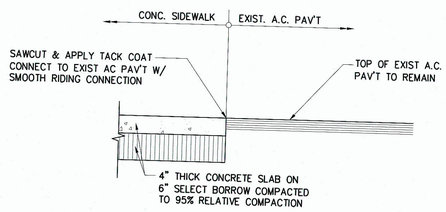

3 C-18 CONC. SIDEWALK / A.C. PAVEMENT CONNECTION DETAIL
SCALE: 3/4" = 1'-0"

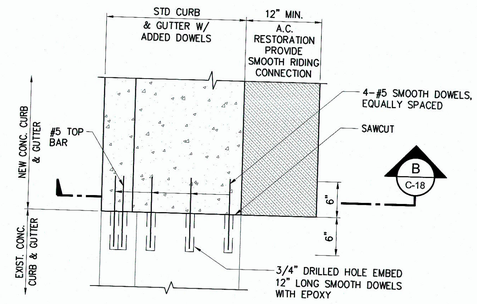

A C-18 PLAN
NOT TO SCALE

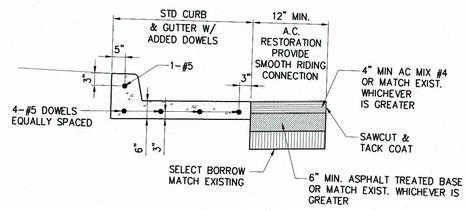

B C-18 SECTION
NOT TO SCALE

7 C-18 CURB & GUTTER CONNECTION DETAIL
SCALE: AS SHOWN

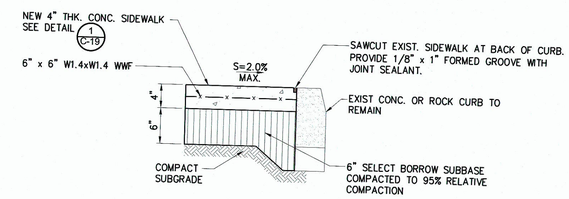

11 C-18 NEW CONC. SIDEWALK TO EXIST CONC. CURB OR ROCK CURB CONNECTION DETAIL (STATE R.O.W.)
SCALE: 1" = 1'-0"

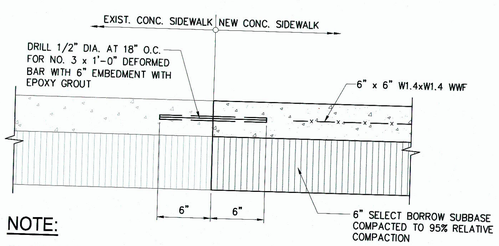

NOTE:

ALL CURB RAMPS SHALL BE REINFORCED

4 C-18 NEW CONC. CURB RAMP/SIDEWALK TO EXIST. CONC. SIDEWALK CONNECTION DETAILS
NOT TO SCALE

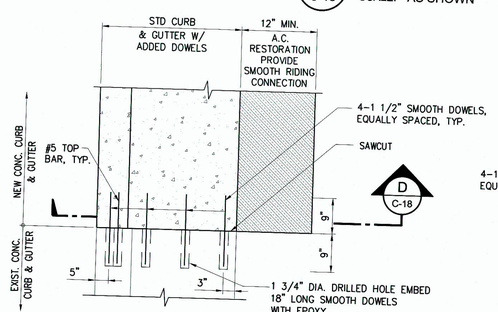

C C-18 PLAN
NOT TO SCALE

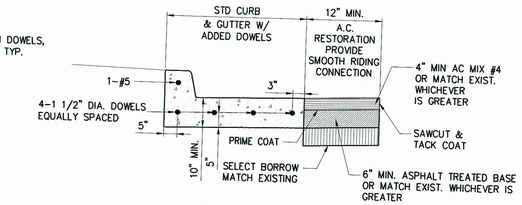

D C-18 SECTION
NOT TO SCALE

8 C-18 CURB & GUTTER CONNECTION DETAIL (STATE R.O.W.)
SCALE: AS SHOWN

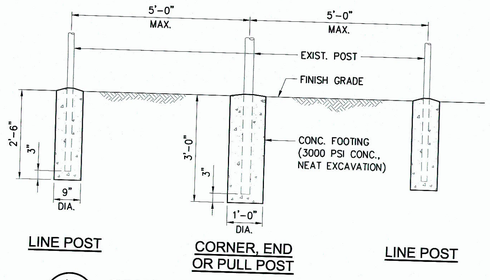

12 C-18 CONC. FOOTING FOR EXIST. POST
NOT TO SCALE

GRAPHICAL SCALE:

1' 0 1' 2' 3'
SCALE: 3/4"=1'-0"

1' 0 1' 2'
SCALE: 1"=1'-0"

IF THIS DRAWING IS LESS THAN 36" X 24" IT IS A REDUCED PRINT. ADJUST SCALE ACCORDINGLY

TY J. DEMPSEY
LICENSED PROFESSIONAL ENGINEER
No. 12058-C
HAWAII, U.S.A.
Exp. 4/30/14

THIS WORK WAS PREPARED BY ME OR UNDER MY SUPERVISION, AND CONSTRUCTION OF THIS PROJECT WILL BE UNDER MY OBSERVATION.

DEPARTMENT OF TRANSPORTATION SERVICES
CITY AND COUNTY OF HONOLULU

BUS STOP ADA ACCESSIBILITY IMPROVEMENTS PHASE VI
(KALIHI TO MILILANI)
HONOLULU, OAHU, HAWAII

DETAILS - 1

DESIGN: RF	APPROVED:		
DRAWN: GD	DIRECTOR, DEPARTMENT OF TRANSPORTATION SERVICES, DTS (FOR WORK WITHIN THE CITY RIGHT OF WAY)	DATE	SHEET No. C-18
CHECKED: EL /MY	ADMINISTRATOR, HIGHWAYS DIVISION, DOT (FOR WORK WITHIN THE STATE RIGHT OF WAY)	DATE	OF 42 SHEETS
DATE: 03/26/13			
PROJECT NO. 3013.10	FILE ___ DRAW ___ FOLDER ___ NUMBER ___		

"AS-BUILT"

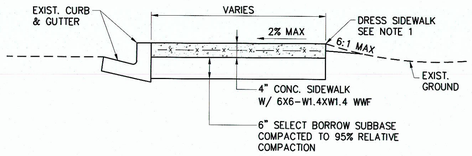

NOTES:

1. DRESSING OF SIDEWALK SHALL CONSIST OF CLEARING, GRUBBING, GRADING, RESHAPING AND COMPACTING THE AREA ADJACENT TO THE IMPROVEMENT WITH SUITABLE MATERIALS AS SHOWN ON THE PLANS AND/ OR AS DIRECTED BY THE ENGINEER. IF EXISTING GROUND ASPHALT OR CONCRETE SURFACE, DRESS SIDEWALK WITH A.C. PAVEMENT, MIX NO. V. THIS WORK SHALL BE CONSIDERED INCIDENTAL TO SIDEWALK.
2. TRANSVERSE AND LONGITUDINAL WEAKENED PLANE JOINTS FOR SIDEWALK SHALL BE CONSIDERED INCIDENTAL TO THE NEW SIDEWALK.
3. INSTALLATION OF DOWELS AND TIE BARS, INCLUDING DRILLING AND EPOXY GROUT, SHALL BE INCIDENTAL TO SIDEWALK.
4. CONCRETE SHALL BE CLASS "A".

1 / C-19 **SIDEWALK DETAIL**
NOT TO SCALE

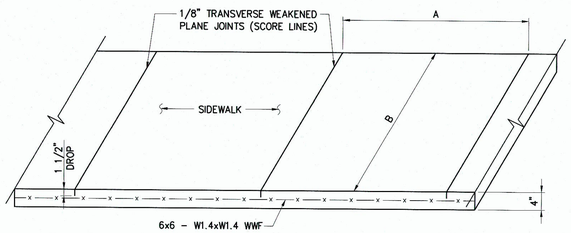

NOTES:

1. JOINT DIMENSIONS OR (B/A OR A/B) < 1.25 AND (A OR B) NOT TO EXCEED 7'-0"
2. LONGITUDINAL JOINTS SHALL BE SIMILAR TO TRANSVERSE JOINTS
3. SPECIAL DESIGN TO USED WHERE A OR B > 7'-0"

2 / C-19 **SIDEWALK CONTRACTION JOINT DETAIL**
NOT TO SCALE

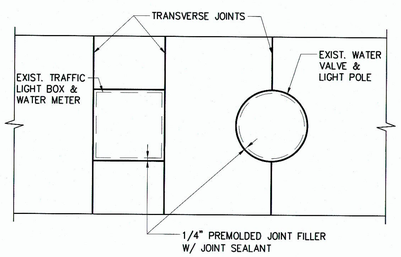

3 / C-19 **SIDEWALK ISOLATION JOINT DETAIL**
NOT TO SCALE

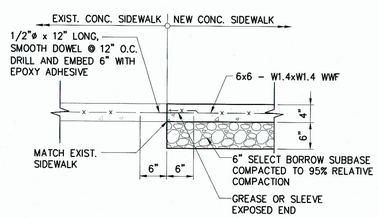

4 / C-19 **TRANSVERSE JOINT AT EXISTING SIDEWALK**
NOT TO SCALE

IF THIS DRAWING IS LESS THAN 36" X 24" IT IS A REDUCED PRINT. ADJUST SCALE ACCORDINGLY

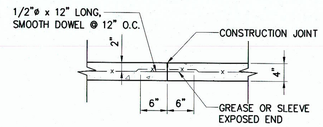

5 / C-19 **TRANSVERSE CONSTRUCTION JOINT DETAIL**
NOT TO SCALE

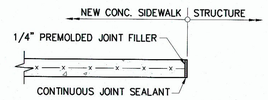

6 / C-24 **TRANSVERSE JOINT AT STRUCTURE DETAIL**
NOT TO SCALE

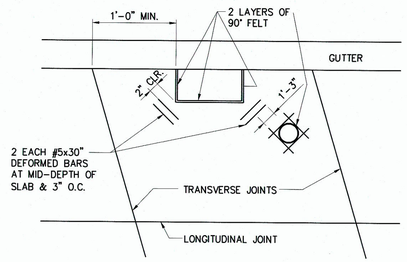

7 / C-19 **OPENINGS AWAY FROM JOINT DETAILS**
NOT TO SCALE

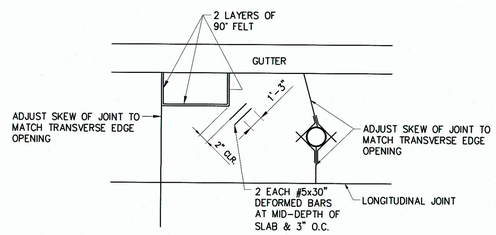

8 / C-19 **OPENINGS NEAR JOINT DETAILS**
NOT TO SCALE

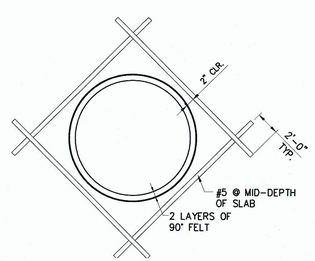

9 / C-19 **CIRCULAR OPENING DETAIL**
NOT TO SCALE

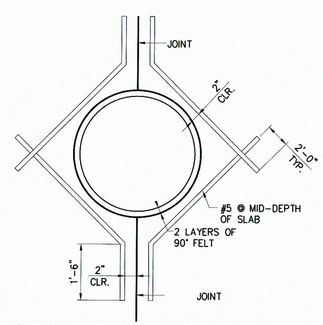

10 / C-19 **CIRCULAR OPENING AT JOINT DETAIL**
NOT TO SCALE

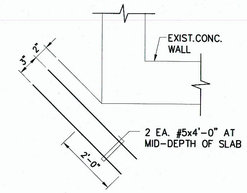

11 / C-19 **ADDED SLAB REINFORCEMENT AT WALLS**
NOT TO SCALE

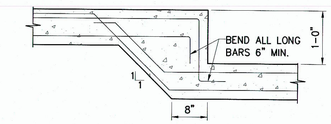

14 / C-19 **STEP FOOTING DETAIL**
NOT TO SCALE

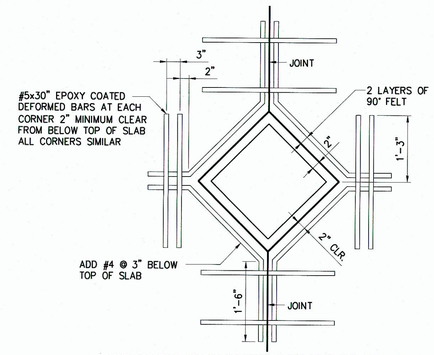

AVOID LOCATING ACCESS OPENINGS ALONG NEAR THE LONGITUDINAL JOINTS THAT SEPARATE TWO TRAVELWAY LANES.

12 / C-19 **OPENING WITH CORNERS**
NOT TO SCALE

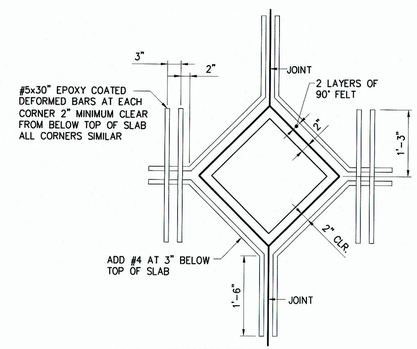

AVOID LOCATING ACCESS OPENINGS ALONG NEAR THE LONGITUDINAL JOINTS THAT SEPARATE TWO TRAVELWAY LANES.

13 / C-19 **OPENING WITH CORNERS - CORNERS AT A JOINT DETAIL**
NOT TO SCALE

JOINTING NOTES:

1. INSTALL ISOLATION JOINTS TO ALLOW THE SLAB TO MOVE INDEPENDENTLY OF OBJECTS THAT WILL NOT MOVE EVENLY WITH THE SLAB TO MINIMIZE STRESS IN THE SLAB.
2. MINIMIZE THE AMOUNT OF OPENINGS WITHIN THE SLAB TO MINIMIZE THE AREAS FROM WHICH CRACKING CAN OCCUR. LISTED BELOW ARE CONSIDERATIONS THAT CAN MINIMIZE CRACKING FROM OPENINGS IN THE SLAB.
   A. INSTALL REINFORCING BARS AT THE CORNERS AS SHOWN BELOW.
   B. USE CIRCULAR OPENINGS.
   C. INSTALL THE OPENINGS ALONG A JOINT.
3. LOCATE OPENINGS IN THE SLAB THAT REQUIRE ACCESS IN A MANNER THAT MINIMIZES HE NUMBERS OF TRAVELWAY LANES THAT NEED TO BE SHUT DOWN WHEN ACCESSING THE OPENINGS.
4. LOCATE OPENINGS ALONG JOINTS AND CONFIGURE TO MINIMIZE THE AMOUNT OF CORNERS WITHIN THE SLAB.
5. AVOID LOCATING ACCESS OPENINGS ALONG OR NEAR THE LONGITUDINAL JOINTS THAT SEPARATE TWO TRAVELWAY LANES.

AS-BUILT DRAWINGS

This certifies that the dimensions and details shown on this sheet reflect the dimensions and details, and specifications as constructed in the field.

KAIKOR CONSTRUCTION CO., INC.

DATE: 7/27/20

TY J. DEMPSEY
LICENSED PROFESSIONAL ENGINEER
No. 12058-C
HAWAII, U.S.A.
Exp. 4/30/14

THIS WORK WAS PREPARED BY ME OR UNDER MY SUPERVISION AND CONSTRUCTION OF THIS PROJECT WILL BE UNDER MY OBSERVATION.

REVISION	DATE	DESCRIPTION	BY	APPROVED

DEPARTMENT OF TRANSPORTATION SERVICES
CITY AND COUNTY OF HONOLULU

BUS STOP ADA ACCESSIBILITY IMPROVEMENTS PHASE VI
(KALIHI TO MILILANI)
HONOLULU, OAHU, HAWAII

DETAILS - 2 (STATE)

DESIGN:	EL	APPROVED:	
DRAWN:	JM	DIRECTOR, DEPARTMENT OF TRANSPORTATION SERVICES, DTS DATE (FOR WORK WITHIN THE CITY RIGHT OF WAY)	
CHECKED:	EL/MY/ET		SHEET No. C-19
DATE:	03/26/13	ADMINISTRATOR, HIGHWAYS DIVISION, DOT DATE (FOR WORK WITHIN THE STATE RIGHT OF WAY)	OF 42 SHEETS
PROJECT NO.	3013.10	FILE ___ DRAW ___ FOLDER ___ NUMBER ___	

"AS-BUILT"

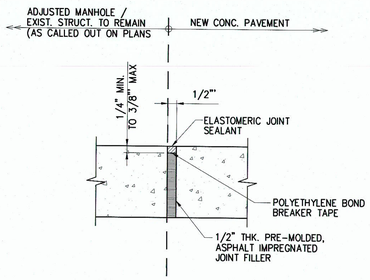

1 / C-20 ISOLATION JOINT DETAIL
NOT TO SCALE

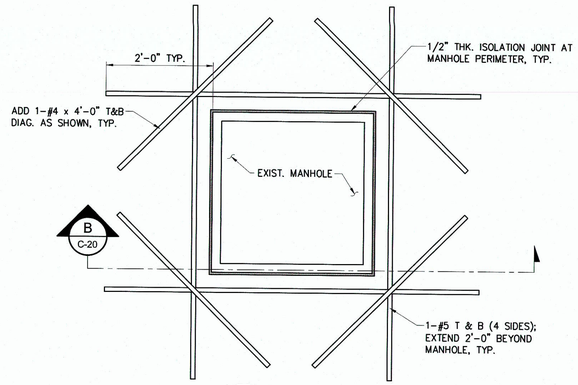

A / C-20 PLAN
SCALE: 3/4" = 1'-0"

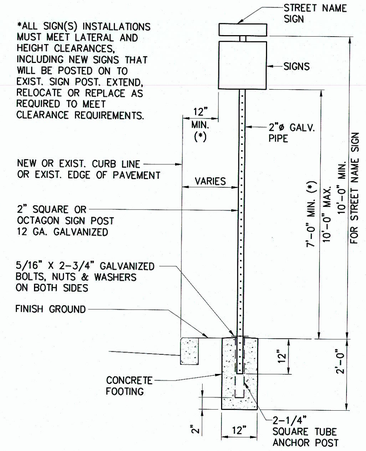

WITH CONCRETE FOOTING

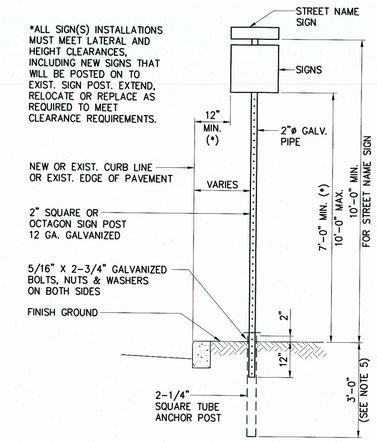

WITH ANCHOR POST, WITHOUT CONCRETE FOOTING

8 / C-20 INSTALLATION OF NEW OR RELOCATED SIGN POST
NOT TO SCALE

ANCHOR POST NOTES:

1. KEEP INSIDE OF 2-1/4" ANCHOR POST FREE FROM IMPEDIMENTS THAT MAY PREVENT PROPER SEATING OF 2' SIGN POST.
2. SQUARE TUBING POST SHALL BE TELESCOPING TYPE WITH 7/16" DIA. HOLES AT 1" O.C. ON FOUR SIDES.
3. OCTAGON SIGN POST SHALL BE TELESCOPING TYPE WITH 7/16" DIA. HOLES AT 1" O.C. ON TWO SIDES.
4. USE 5/16" x 2-3/4" BOLTS TO SECURE THE OCTAGONAL AND SQUARE TUBING POST ONTO THE 2-1/4" SQUARE TUBE ANCHOR POST.
5. MINIMUM BURY DEPTH FOR THE 2-1/4" ANCHOR POST SHALL BE AS FOLLOWS:

   4'-0" MIN. AT POOR SOIL CONDITION
   2'-6" MIN. AT ROCKY CONDITIONS

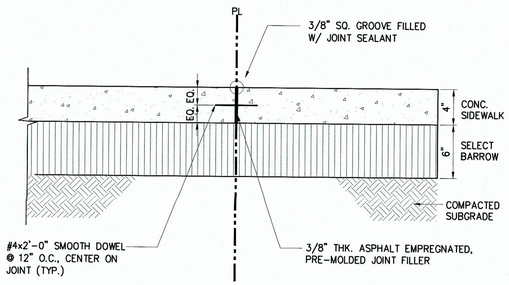

2 / C-20 EXPANSION JOINT DETAIL @ PL
NOT TO SCALE

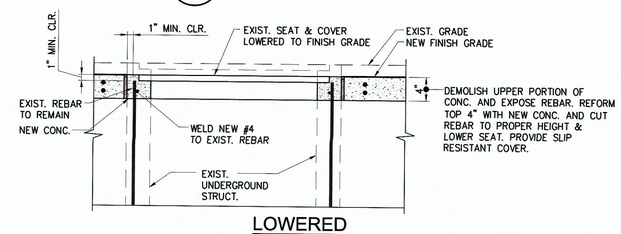

LOWERED

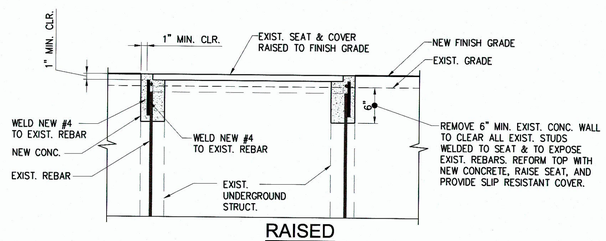

RAISED

B / C-20 SECTION
SCALE: 1" = 1'-0"

6 / C-20 EXISTING BOX & SEAT ADJUSTMENT DETAIL
SCALE: AS SHOWN

W/O ISA
R7-1
12" x 18"

W/ ISA
R7-107
12" x 24"

9 / C-20 SIGN DETAIL
NOT TO SCALE

NOTE:

BUS ROUTE IDENTIFICATION SIGNS SHALL COMPLY WITH 703.5.1 THROUGH 703.5.4, AND 703.5.7 AND 703.5.8. IN ADDITION, TO MAXIMUM EXTENT PRACTICABLE, BUS ROUTE IDENTIFICATION SIGNS SHALL COMPLY WITH 703.5.5.

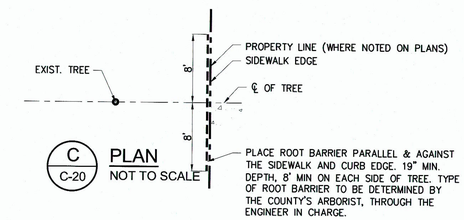

C / C-20 PLAN
NOT TO SCALE

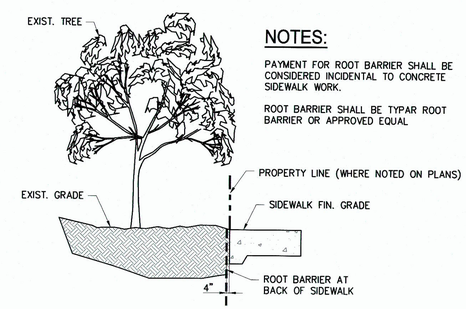

NOTES:

PAYMENT FOR ROOT BARRIER SHALL BE CONSIDERED INCIDENTAL TO CONCRETE SIDEWALK WORK.

ROOT BARRIER SHALL BE TYPAR ROOT BARRIER OR APPROVED EQUAL

D / C-20 ELEVATION
NOT TO SCALE

11 / C-20 ROOT BARRIER DETAIL
SCALE: AS SHOWN

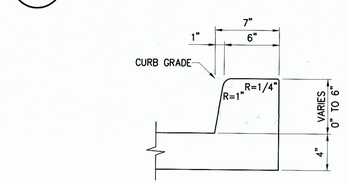

4 / C-20 SECTION GRADE ADJUSTMENT CURB
SCALE: 1-1/2" = 1'-0"

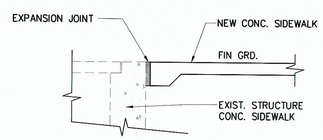

7 / C-20 EXIST. STRUCTURE CONNECTION
NOT TO SCALE

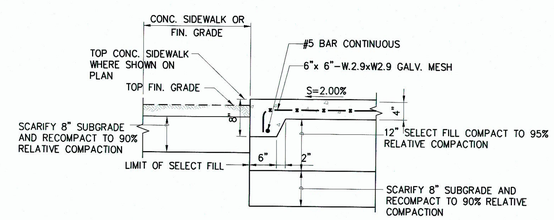

10 / C-20 THICKENED EDGE CONC. PAV'T DETAIL
NOT TO SCALE

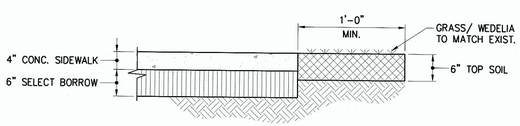

5 / C-20 GRASS / WEDELIA RESTORATION DETAIL
NOT TO SCALE

IF THIS DRAWING IS LESS THAN 36" X 24" IT IS A REDUCED PRINT. ADJUST SCALE ACCORDINGLY

AS-BUILT DRAWINGS

This certifies that the dimensions and details shown on this sheet reflect the dimensions and details, and specifications as constructed in the field.

KAIKOR CONSTRUCTION CO., INC.

DATE: 7/27/20

GRAPHICAL SCALE:

1' 0 1' 2' 3'
SCALE: 3/4"=1'-0"

1' 0 1' 2'
SCALE: 1"=1'-0"

0.5' 0 1' 2'
SCALE: 1-1/2"=1'-0"

TY J. DEMPSEY
LICENSED PROFESSIONAL ENGINEER
No. 12058-C
HAWAII, U.S.A.
Exp. 4/30/14

THIS WORK WAS PREPARED BY ME OR UNDER MY SUPERVISION, AND CONSTRUCTION OF THIS PROJECT WILL BE UNDER MY OBSERVATION.

DEPARTMENT OF TRANSPORTATION SERVICES
CITY AND COUNTY OF HONOLULU

BUS STOP ADA ACCESSIBILITY IMPROVEMENTS PHASE VI
(KALIHI TO MILILANI)
HONOLULU, OAHU, HAWAII

DETAILS - 3

DESIGN: RF	APPROVED:		
DRAWN: GD	DIRECTOR, DEPARTMENT OF TRANSPORTATION SERVICES, DTS DATE (FOR WORK WITHIN THE CITY RIGHT OF WAY)		SHEET No. C-20 OF 42 SHEETS
CHECKED: EL /MY			
DATE: 03/26/13	ADMINISTRATOR, HIGHWAYS DIVISION, DOT DATE (FOR WORK WITHIN THE STATE RIGHT OF WAY)		
PROJECT NO. 3013.10	FILE ___ DRAW ___ FOLDER ___ NUMBER ___		

"AS-BUILT"

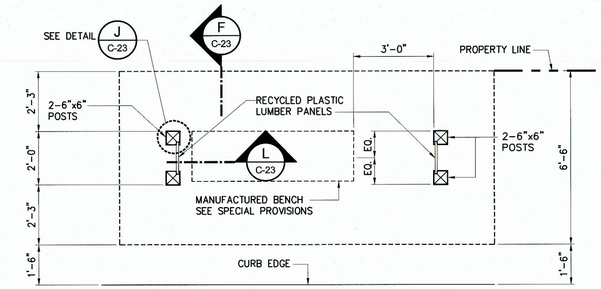

A C-23 FLOOR PLAN
SCALE: 3/8" = 1' - 0"

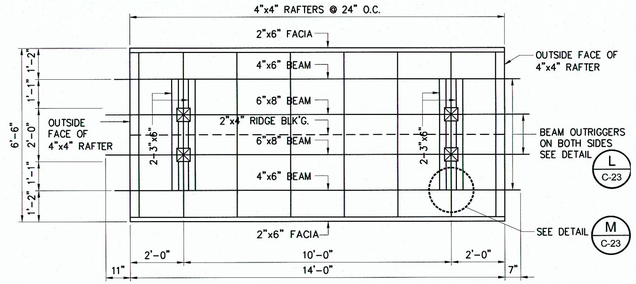

B C-23 ROOF FRAMING PLAN
SCALE: 3/8" = 1' - 0"

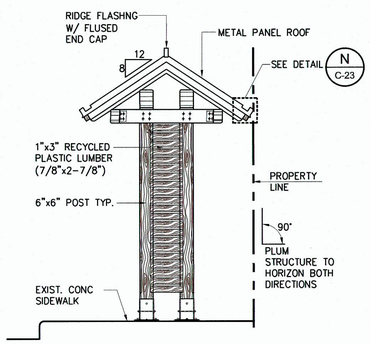

METAL PANEL ROOFING

C C-23 TYP. END ELEV.
SCALE: 3/8" = 1' - 0"

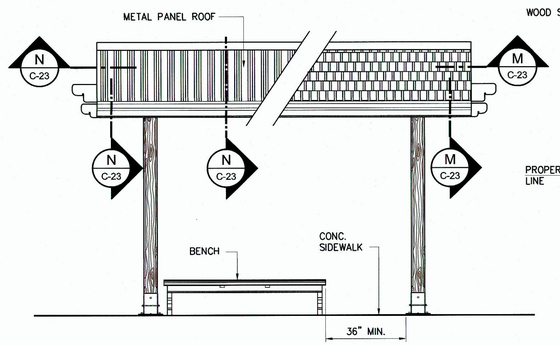

METAL PANEL ROOFING WOOD SHINGLE ROOFING

D C-23 FRONT ELEV. & REAR SIMILAR
SCALE: 3/8" = 1' - 0"

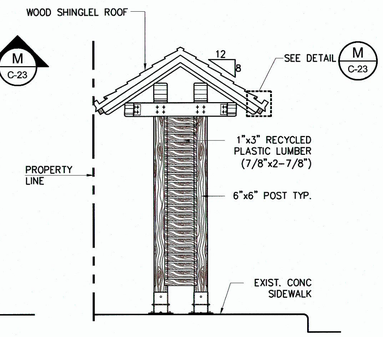

WOOD SHINGLE ROOFING

E C-23 TYP. END ELEV.
SCALE: 3/8" = 1' - 0"

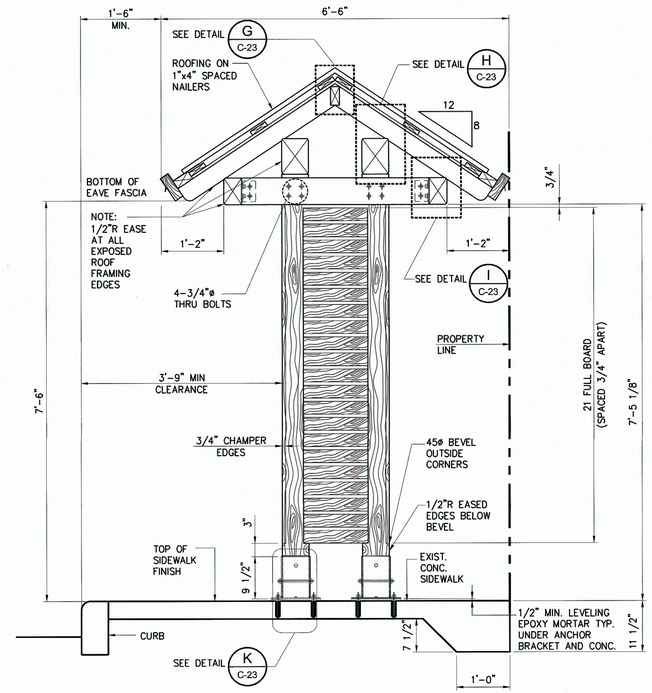

F C-23 SECTION
SCALE: 3/4" = 1' - 0"

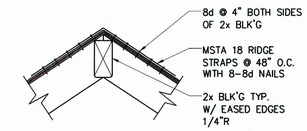

G C-23 RIDGE ANCHORING
SCALE: 1-1/2" = 1' - 0"

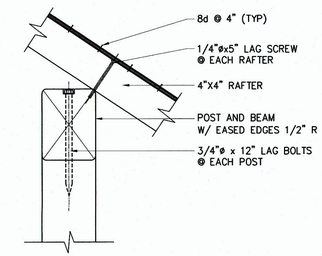

H C-23 RAFTER BEAM CONNECTION
SCALE: 1-1/2" = 1' - 0"

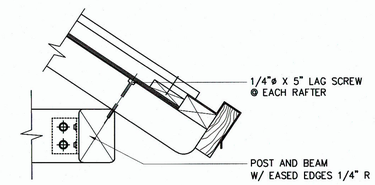

I C-23 RAFTER/EAVE BEAM CONNECTION
SCALE: 1-1/2" = 1' - 0"

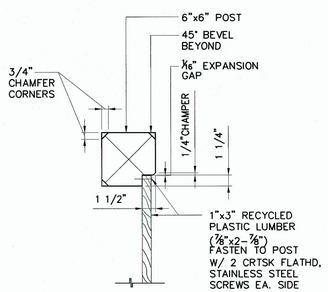

J C-23 SIDE PANEL DETAIL
SCALE: 1-1/2" = 1' - 0"

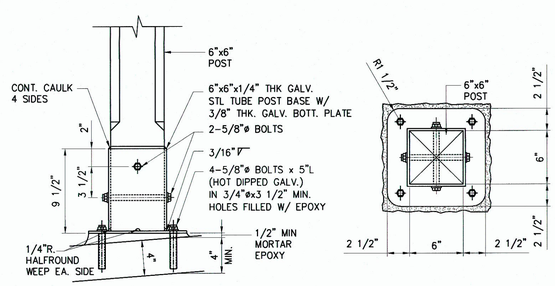

SECTION PLAN

K C-23 POST ANCHOR DETAIL
SCALE: 1-1/2" = 1' - 0"

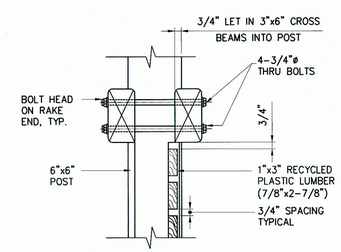

L C-23 CROSS BEAMS/POST CONNECTION
SCALE: 1-1/2" = 1' - 0"

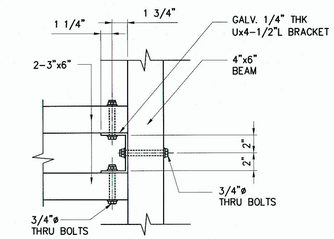

M C-23 CROSS BEAMS/EAVE BEAMS CONNECTION
SCALE: 1-1/2" = 1' - 0"

NOTES:

DESIGN LOADS:
ROOF LIVE LOAD: 20 PSF
WIND VELOCITY: 80 MPH, EXPOSURE D PER UBC 1994
SEISMIC: ZONE 2A, PER UBC 1994

1 C-23 TYPE "B" SHELTER
SCALE: 3/8" = 1' - 0"

GRAPHICAL SCALE:

2' 0 2' 4' 6'
SCALE: 3/8"=1'-0"

1' 0 1' 2' 3'
SCALE: 3/4"=1'-0"

1' 0 1'
SCALE: 1-1/2"=1'-0"

AS-BUILT DRAWINGS

This certifies that the dimensions and details shown on this sheet reflect the dimensions and details, and specifications as constructed in the field.

KAIKOR CONSTRUCTION CO., INC.

DATE: 7/27/20

IF THIS DRAWING IS LESS THAN 36" X 24" IT IS A REDUCED PRINT. ADJUST SCALE ACCORDINGLY

TY J. DEMPSEY LICENSED PROFESSIONAL ENGINEER No. 12058-C HAWAII, U.S.A.
Exp. 4/30/14

THIS WORK WAS PREPARED BY ME OR UNDER MY SUPERVISION AND CONSTRUCTION OF THIS PROJECT WILL BE UNDER MY OBSERVATION.

DEPARTMENT OF TRANSPORTATION SERVICES
CITY AND COUNTY OF HONOLULU

BUS STOP ADA ACCESSIBILITY IMPROVEMENTS PHASE VI
(KALIHI TO MILILANI)
HONOLULU, OAHU, HAWAII

TYPE "B" BUS SHELTER DETAILS

DESIGN: RF	APPROVED:		
DRAWN: DG	DIRECTOR, DEPARTMENT OF TRANSPORTATION SERVICES, DTS DATE (FOR WORK WITHIN THE CITY RIGHT OF WAY)		SHEET No. C-23 OF 42 SHEETS
CHECKED: EL/MY/ET	ADMINISTRATOR, HIGHWAYS DIVISION, DOT DATE (FOR WORK WITHIN THE STATE RIGHT OF WAY)		
DATE: 03/26/13			
PROJECT NO. 3013.10	FILE ___ DRAW ___ FOLDER ___ NUMBER ___		

"AS-BUILT"

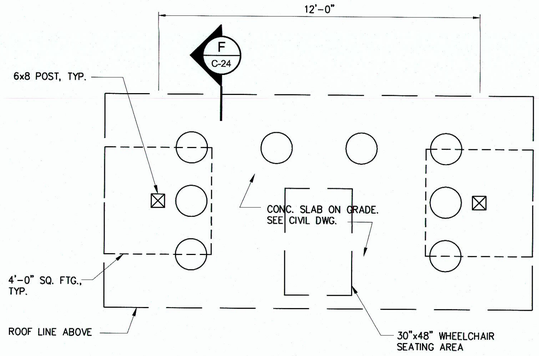

A C-24 FLOOR PLAN
SCALE: 3/8" = 1' - 0"

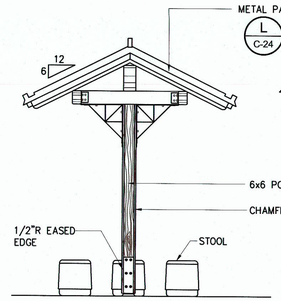

E C-24 LEFT/RIGHT ELEVATION
SCALE: 3/8" = 1' - 0"

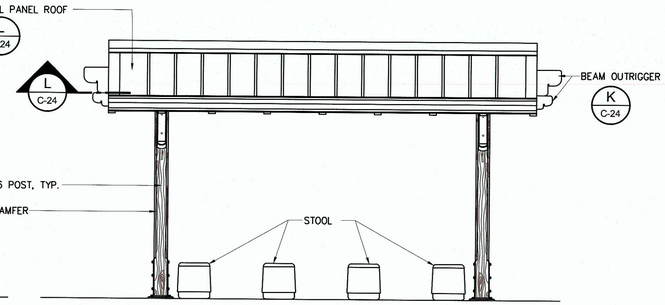

F C-24 FRONT/REAR ELEVATION
SCALE: 3/8" = 1' - 0"

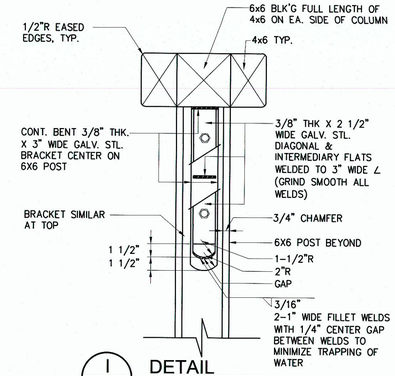

I C-24 DETAIL
SCALE: 1-1/2" = 1' - 0"

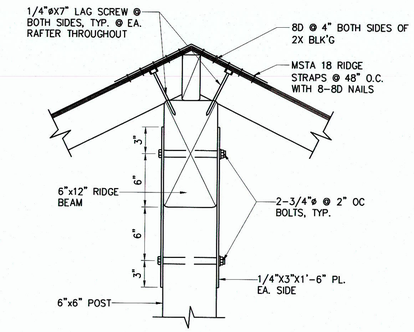

J C-24 RIDGE ANCHORING
SCALE: 1-1/2" = 1' - 0"

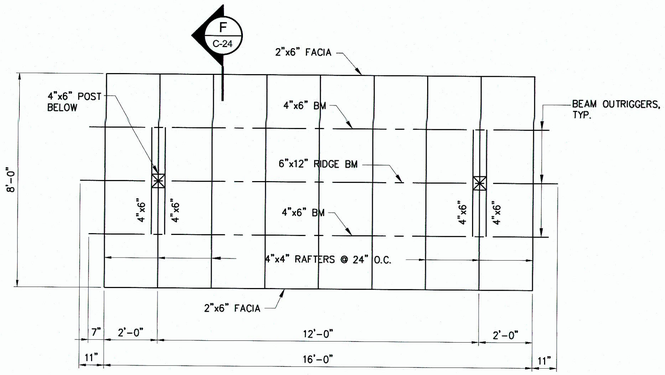

B C-24 ROOF FRAMING PLAN
SCALE: 3/8" = 1' - 0"

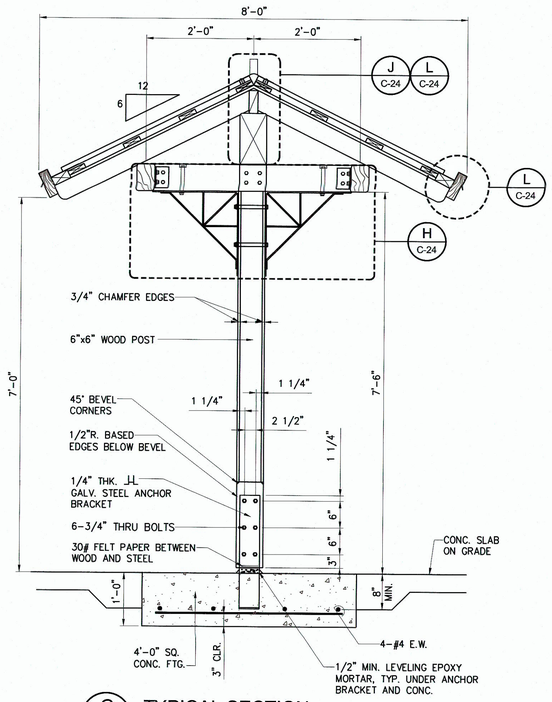

G C-24 TYPICAL SECTION
SCALE: 3/4" = 1' - 0"

AS-BUILT DRAWINGS

This certifies that the dimensions and details shown on this sheet reflect the dimensions and details, and specifications as constructed in the field.

KAIKOR CONSTRUCTION CO., INC.

DATE: 7/27/20

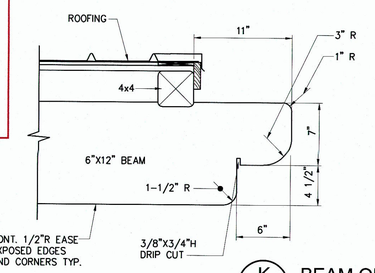

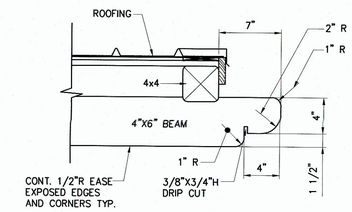

K C-24 BEAM OUTRIGGER DETAILS
SCALE: 1-1/2" = 1' - 0"

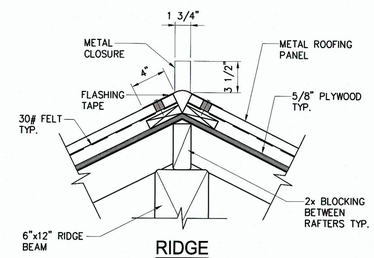

RIDGE

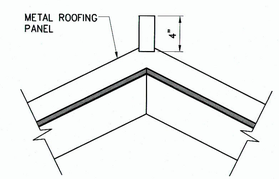

ELEVATION

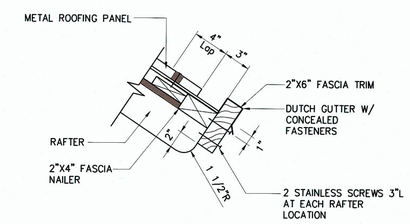

GUTTER FASCIA

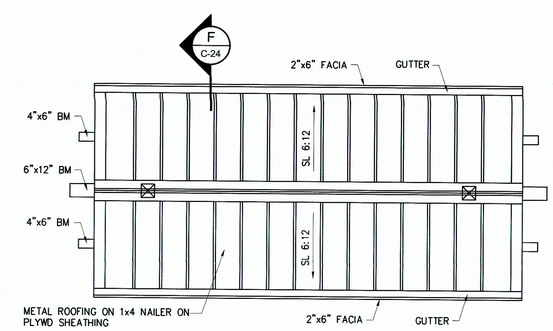

C C-24 ROOF PLAN
SCALE: 3/8" = 1' - 0"

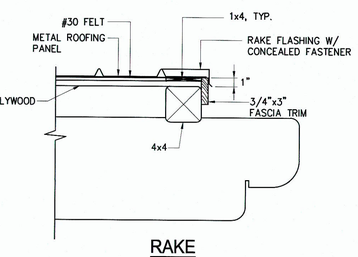

RAKE

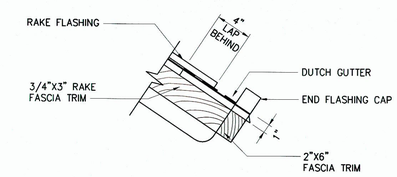

RAKE ELEVATION

L C-24 METAL PANEL ROOF DETAILS
SCALE: 1-1/2" = 1' - 0"

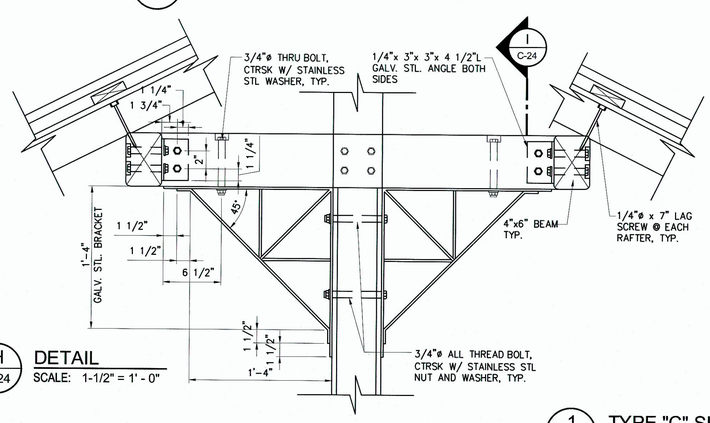

H C-24 DETAIL
SCALE: 1-1/2" = 1' - 0"

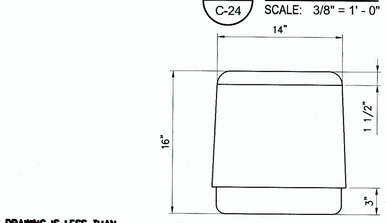

D C-24 CONC. STOOL DETAIL
SCALE: 1:10

1 C-24 TYPE "C" SHELTER
SCALE: AS SHOWN

1' 0 1' 2'
SCALE: 3/4"=1'-0"

1' 0 2' 4' 6'
SCALE: 3/8"=1'-0"

6" 0 6" 12" 18"
SCALE: 1-1/2"=1'-0"

IF THIS DRAWING IS LESS THAN 36" x 24" IT IS A REDUCED PRINT. ADJUST SCALE ACCORDINGLY

TY J. DEMPSEY
LICENSED PROFESSIONAL ENGINEER
No. 12058-C
HAWAII, U.S.A.
Exp. 4/30/14

THIS WORK WAS PREPARED BY ME OR UNDER MY SUPERVISION AND CONSTRUCTION OF THIS PROJECT WILL BE UNDER MY OBSERVATION.

DEPARTMENT OF TRANSPORTATION SERVICES
CITY AND COUNTY OF HONOLULU

BUS STOP ADA ACCESSIBILITY IMPROVEMENTS
PHASE VI
(KALIHI TO MILILANI)
HONOLULU, OAHU, HAWAII

TYPE "C" BUS SHELTER DETAILS

DESIGN:	RF	APPROVED:	
DRAWN:	GD	DIRECTOR, DEPARTMENT OF TRANSPORTATION SERVICES, DTS DATE (FOR WORK WITHIN THE CITY RIGHT OF WAY)	
CHECKED:	EL/MY/ET	ADMINISTRATOR, HIGHWAYS DIVISION, DOT DATE (FOR WORK WITHIN THE STATE RIGHT OF WAY)	SHEET No. C-24 OF 42 SHEETS
DATE:	03/26/13		
PROJECT NO.	3013.10	FILE ___ DRAW ___ FOLDER ___ NUMBER ___	

"AS-BUILT"

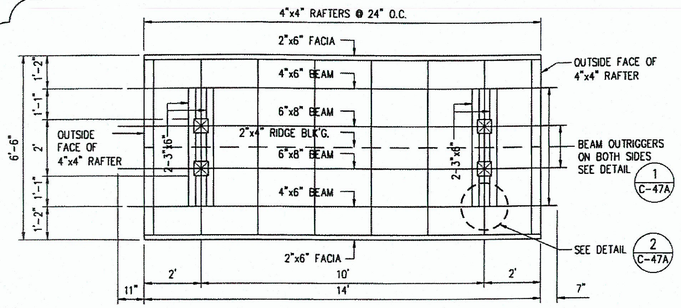

ROOF FRAMING PLAN

SCALE: 3/8"=1'-0"

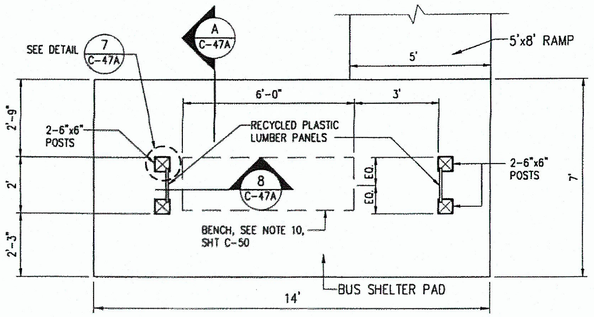

FLOOR PLAN

SCALE: 3/8"=1'-0"

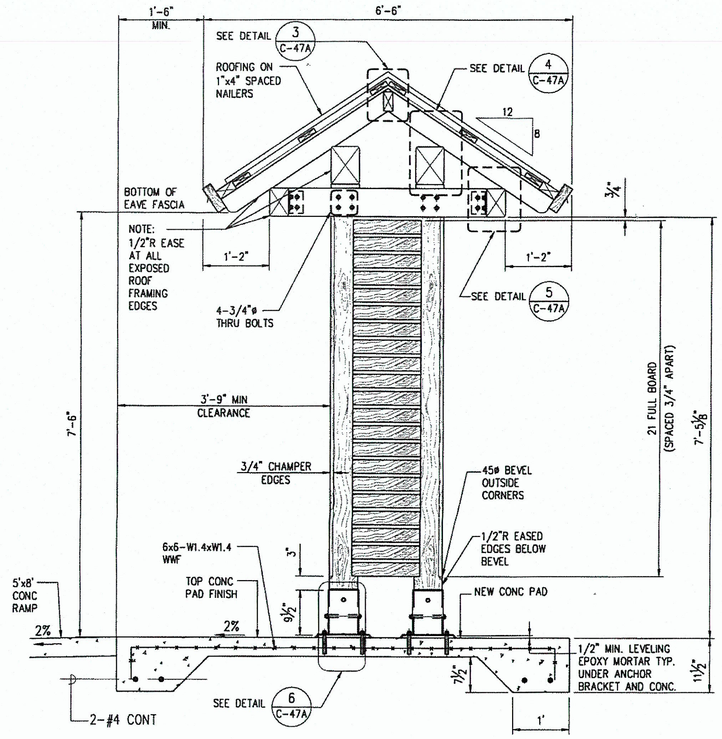

A C-47A

SECTION

SCALE: 3/4"=1'-0"

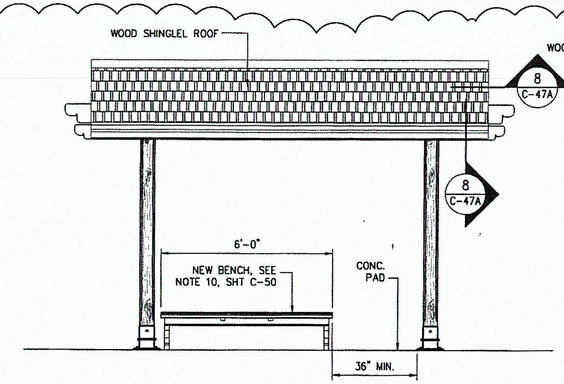

FRONT ELEVATION & REAR SIMILAR

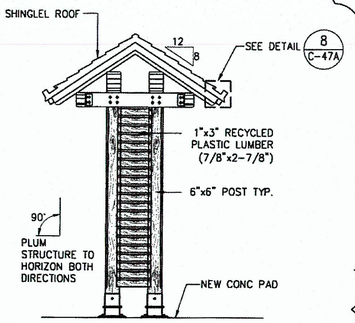

TYP. END ELEVATION

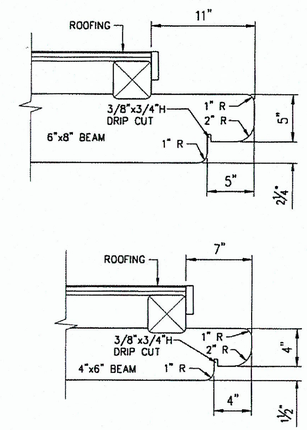

1 C-47A

BEAM OUTRIGGER DETAIL

SCALE: 1-1/2"=1'-0"

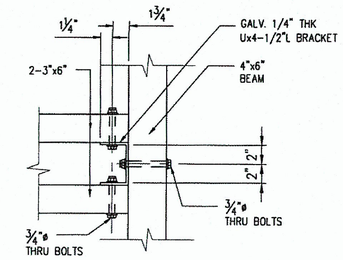

2 C-47A

CROSS BEAMS/EAVE BEAMS CONNECTION

SCALE: 1-1/2"=1'-0"

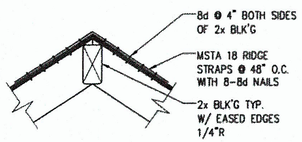

3 C-47A

RIDGE ANCHORING

SCALE: 1-1/2"=1'-0"

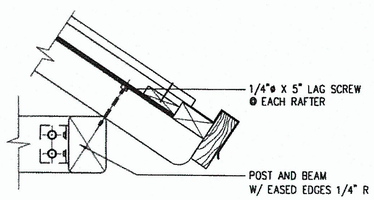

5 C-47A

RAFTER/EAVE BEAM CONNECTION

SCALE: 1-1/2"=1'-0"

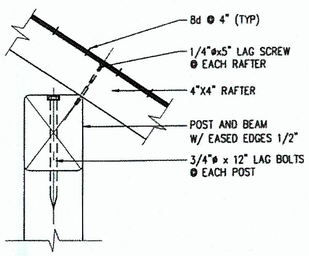

4 C-47A

RAFTER BEAM CONNECTION

SCALE: 1-1/2"=1'-0"

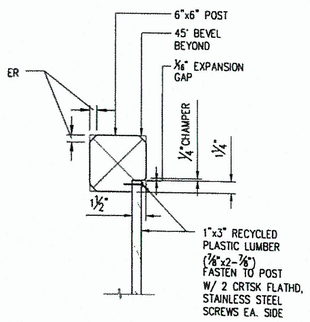

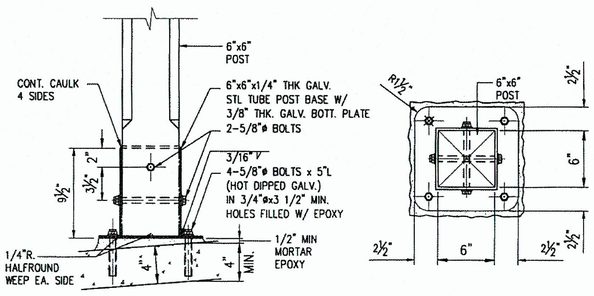

6 C-47A

POST ANCHOR DETAIL

SCALE: 1-1/2"=1'-0"

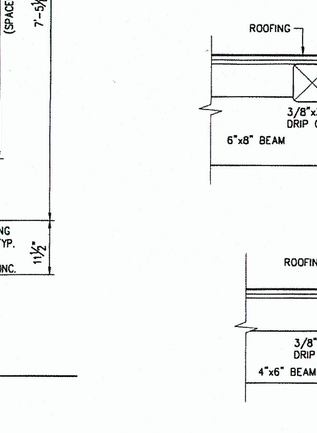

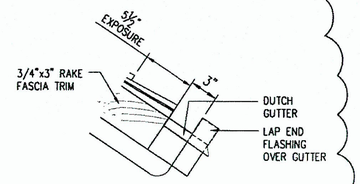

1 C-47A

WOOD SHINGLE ROOF DETAILS

SCALE: 1-1/2"=1'-0"

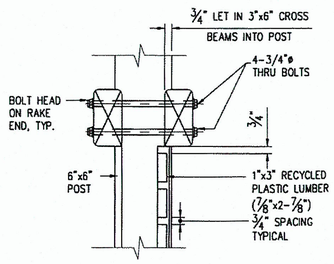

AS-BUILT DRAWINGS

This certifies that the dimensions and details shown on this sheet reflect the dimensions and details, and specifications as constructed in the field.

KAIKOR CONSTRUCTION CO., INC.

DATE: 7/27/20

GRAPHIC SCALES

REVISION	DATE		SHT NO.	APPROVED

MARK T. YOSHIMURA
LICENSED PROFESSIONAL ENGINEER
No. 6419-C
HAWAII, U.S.A.

DEPARTMENT OF TRANSPORTATION SERVICES
CITY & COUNTY OF HONOLULU

BUS STOP SITE IMPROVEMENTS,
BUS SHELTER REPAIRS (FY12)

OAHU, HAWAII

TYPE "B" BUS SHELTER DETAILS

"AS-BUILT"