FED. ROAD DIST. NO.	STATE	FED. AID PROJ. NO.	FISCAL YEAR	SHEET NO.	TOTAL SHEETS
HAWAII	HAW.	U-072-1(13)	1963	139	246
		U-098-1(4)	1963	63	88
		F-090-1(2)	1963	67	98

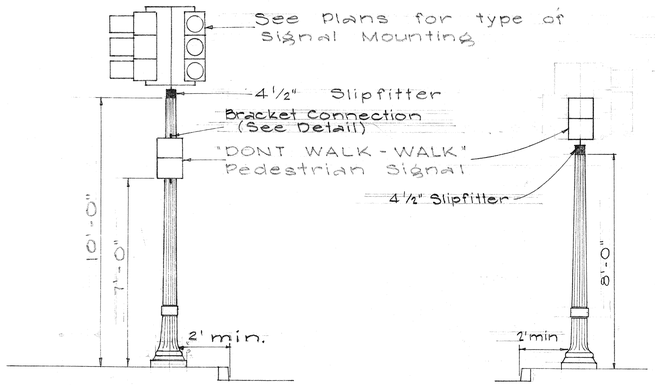

ON 10-FOOT STANDARDS ON 8-FOOT STANDARDS

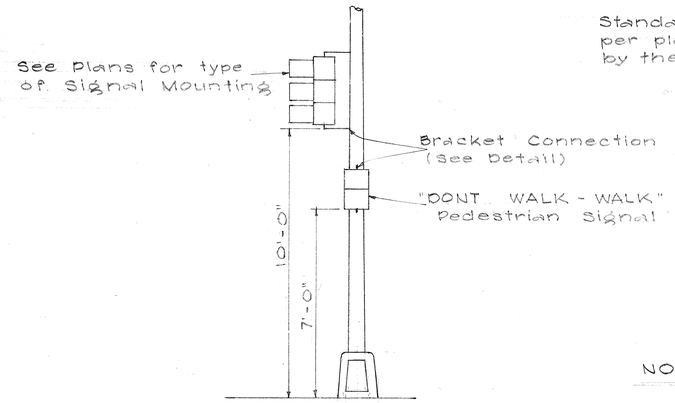

ON MAST-ARM STANDARDS

TYPICAL EQUIPMENT MOUNTING

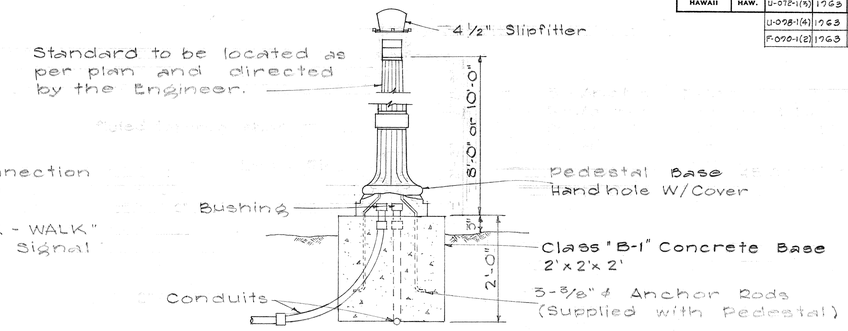

TRAFFIC SIGNAL POLE & BASE

NOTE: Controller pedestal and base shall be as detailed above except the shaft shall be 4 ft. in length.

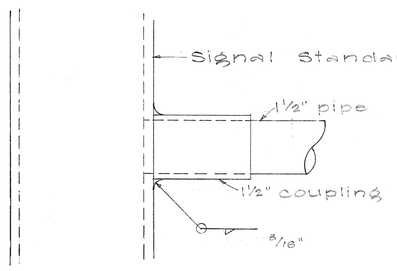

DETAIL OF BRACKET CONNECTION

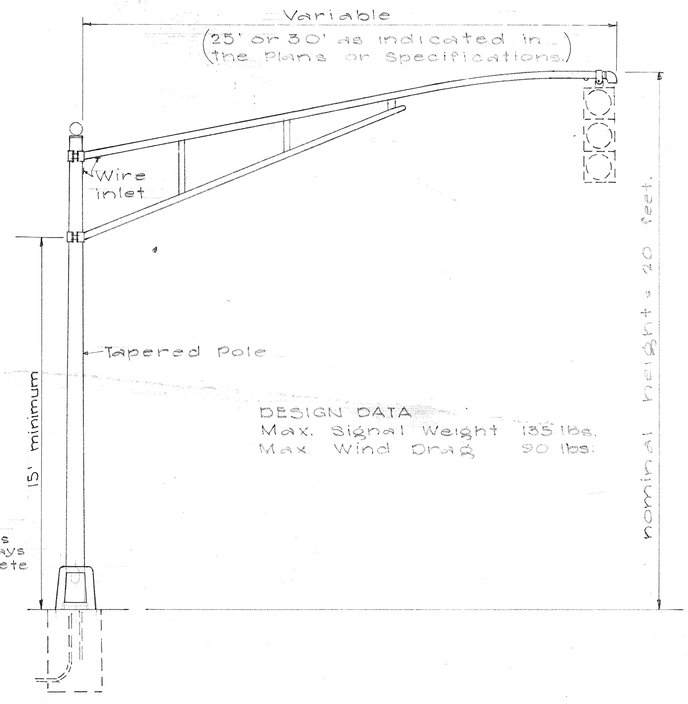

MAST ARM STANDARD

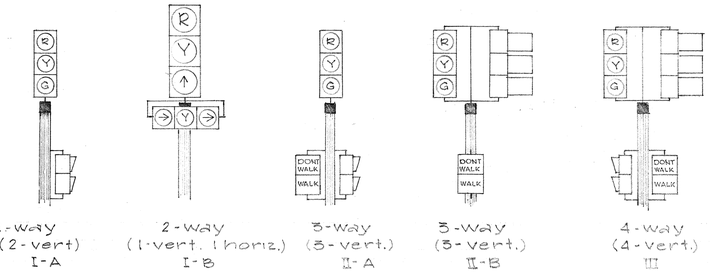

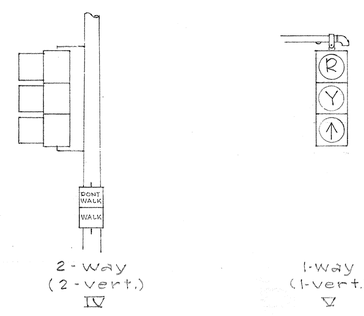

TYPICAL VEHICULAR AND PEDESTRIAN SIGNAL MOUNTINGS

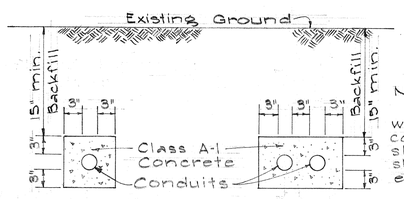

NOTE:
Conduits under paved sidewalks shall be Asbestos Cement conduit concrete encased as shown. Conduits under roadways shall be steel conduit concrete encased as shown.

TYPICAL DETAIL OF STEEL CONDUITS & ASBESTOS CEMENT CONDUITS ENCASED IN CONCRETE

ORIGINAL PLANS	SURVEY PLOTTED BY	DATE
	DRAWN BY	"
	TRACED BY	"
	DESIGNED BY	"
NOTE BOOK	QUANTITIES BY	"
No.	CHECKED BY	"

STATE OF HAWAII
DEPARTMENT OF TRANSPORTATION
HIGHWAYS DIVISION

MISCELLANEOUS DETAILS
TRAFFIC SIGNAL SYSTEM

LILIHA STREET PROJ. Nº F-090-1(2)
LUNALILO FREEWAY PROJ. Nº U-072-1(13)
VINEYARD BOULEVARD PROJ. Nº U-098-1(4)

NO SCALE

SHEET No. 4 OF 4 SHEETS

PRINTED ON CLEARPRINT 1000-H

F 090 10200.67 U 098 10400.63 U 072 10300.139

168