FED. ROAD DIST. No.	STATE	FED. AID PROJ. No.	FISCAL YEAR	SHEET No.	TOTAL SHEETS
HAWAII	HAW.	S-219(3)	1960	12	15

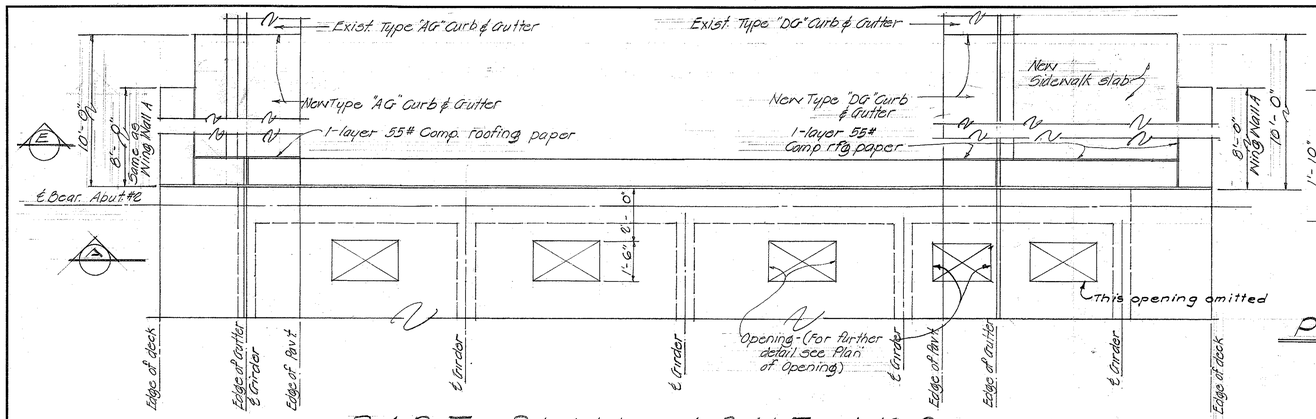

PART PLAN - ABUT. № 2

Scale: 3/8" = 1'-0"

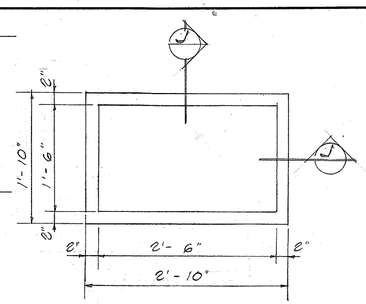

PLAN OF OPENING

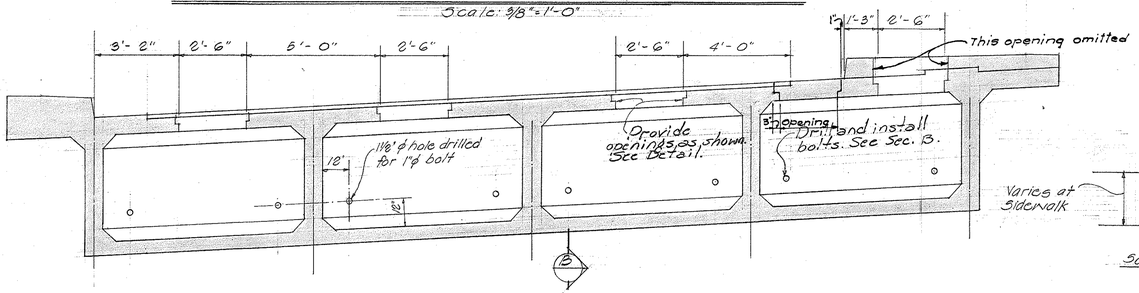

SECTION

Scale: 3/8" = 1'-0"

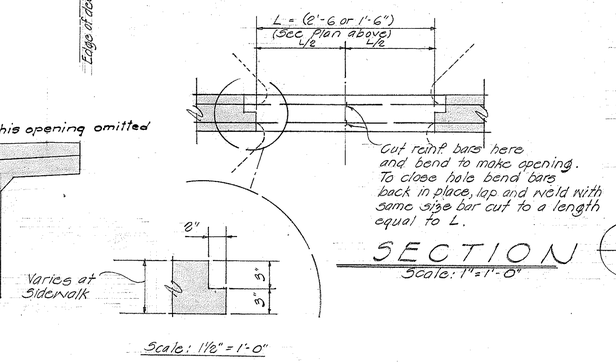

SECTION

Scale: 1" = 1'-0"

Scale: 1 1/8" = 1'-0"

GENERAL NOTES

1- Limits of excavation shown on the plan is the minimum allowed. Any additional excavation required by the contractor shall be at his expense.
2- Backfill behind abutment shall be in accordance with the Standard Specifications. The filter material removed need not be replaced.
3- All bolts, washers, nuts and steel bearing & expansion plates shall be ASTM A-7 and shall be galvanized in accordance with the Standard Specifications.
4- The access holes on the top deck shall be closed by using Class A-1 concrete. An epoxy bonding compound shall be applied in accordance with the manufacturers recommendations on all contact surfaces between the existing and new concrete. The access holes shall not be closed until directed by the Engineer.
5- All 1 1/8" ϕ holes for the bolts shall be drilled with diamond core bits.
6- The whole approach slab shall be removed from the cut line as shown on the plans and replaced with 8" untreated base course and A.C. pavement.
7- The existing sidewalk, curb, and gutters shall be removed and replaced as shown on the plans.
8- Live load shall not be permitted on superstructure until repair is completed and concrete used in closing the opening has attained a strength of 3000#/□" but not less than 14 days after its pour.
9- All concrete used for repair shall be Class A-1 Concrete. See Special Provisions for Admixture.
10- Provide smooth connection between repair area and existing pavement.

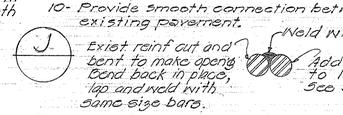

DET. - REINF BAR WELD

No Scale

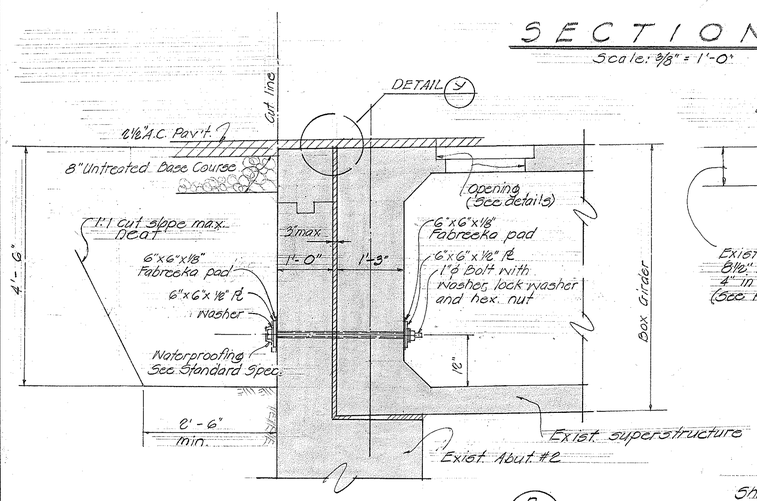

SECTION

Scale: 3/4" = 1'-0"

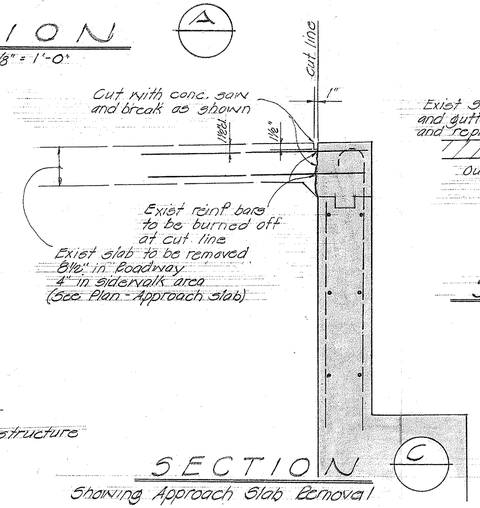

SECTION

Showing Approach Slab Removal

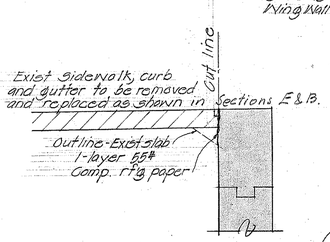

SECTION

Scale: 3/4" = 1'-0"

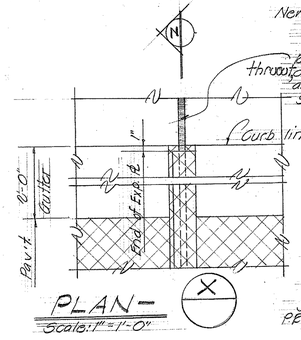

PLAN - X

Scale: 1" = 1'-0"

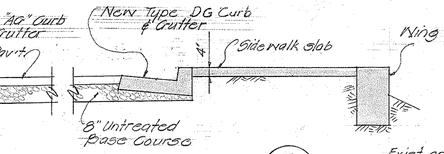

SECTION

Scale: 3/8" = 1'-0"

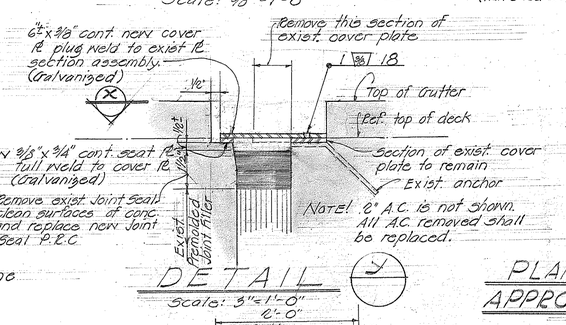

DETAIL

Scale: 3" = 1'-0"

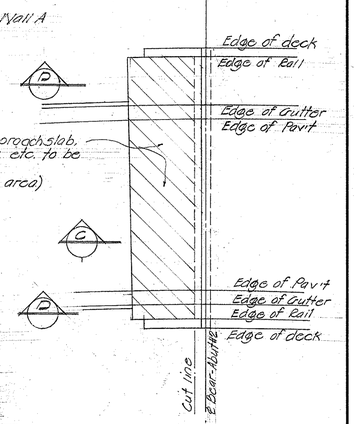

PLAN - LIMITS OF APPROACH SLAB REMOVAL

Scale: 1" = 10'-0"

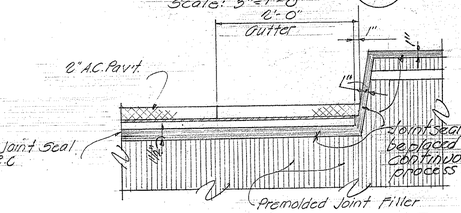

SECTION

Scale: 1" = 1'-0"

ESTIMATED QUANTITIES

Repair to exist bridge	Lump Sum	(See Special Provisions)
8" Untreated base	10 c.y.	
A.C. Mix V	3 tons	Sprinkling --- 8 M Gal.
A.C. Mix III	5 tons	
Sidewalk slab	75 sq. ft.	
"AG" Curb & Gutter	10 lin. ft.	
"DG" Curb & Gutter	10 lin. ft.	
Emulsified Asphalt Mixing Type for Prime Coat	10 gal.	

ORIGINAL PLAN		DATE
	SURVEY PLOTTED BY	
	DRAWN BY	7/1/60
	TRACED BY	7/1/60
	DESIGN CHECKED BY	7/1/60
NOTE BOOK No.	QUANTITIES CHECKED BY	7/1/60

TERRITORIAL HIGHWAY DEPARTMENT
TERRITORY OF HAWAII

DAMON OVERPASS

REPAIR TO EXIST. ABUT. #2

MOANALUA ROAD

PROJ. NO. S-219(3)

SHEET No. 1 OF 1 SHEETS

12

PRINTED ON DIEPO 1000H CLEARPRINT