FED. ROAD DIST. NO.	STATE	FED. AID PROJ. NO.	FISCAL YEAR	SHEET NO.	TOTAL SHEETS
HAWAII	HAW.	STP-7241(002)	2012	81	81

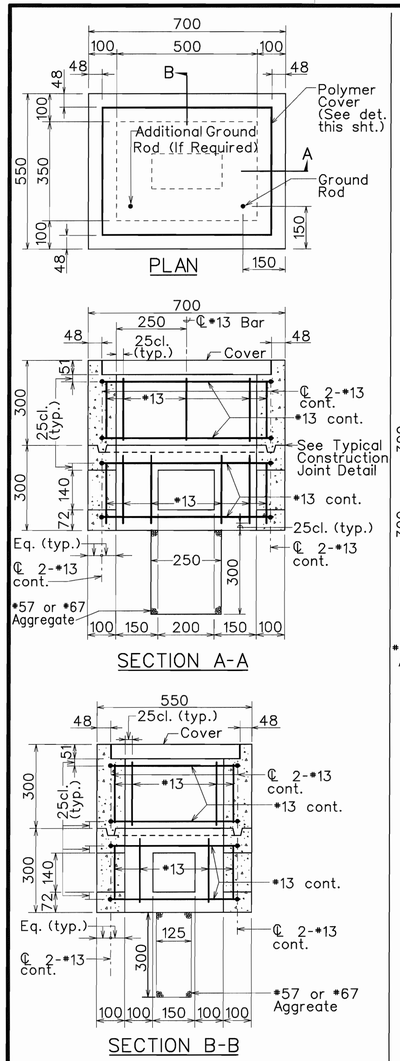

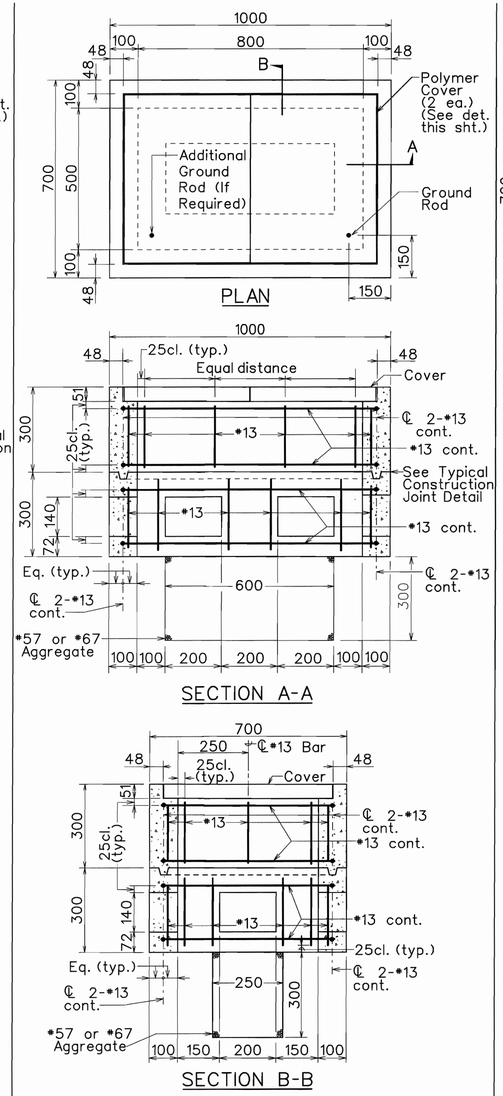

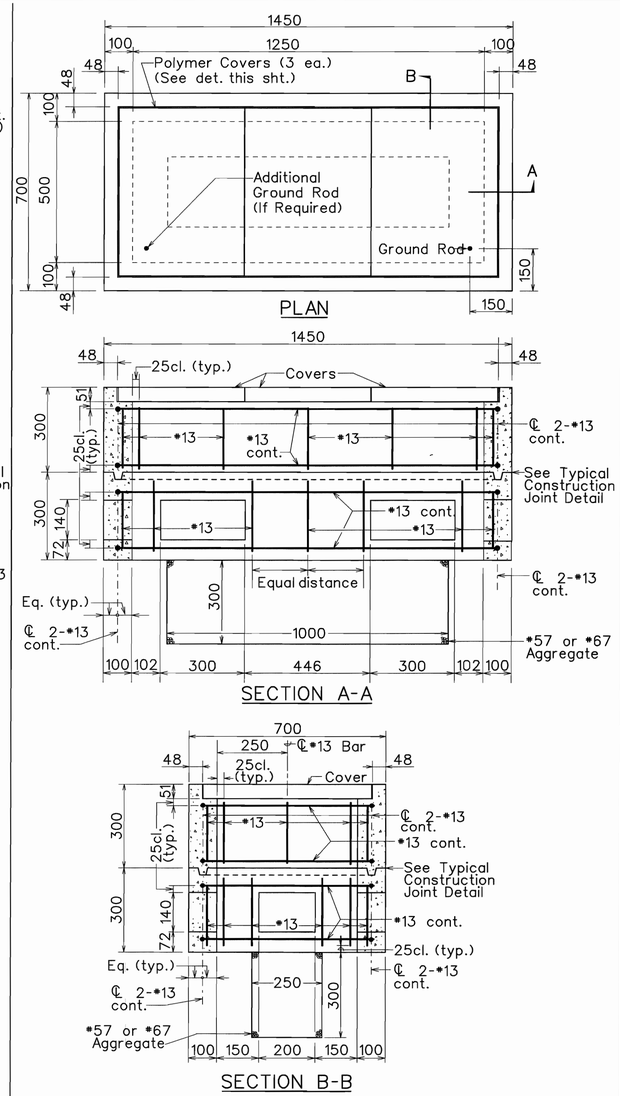

GENERAL NOTES

1. Provide a minimum of one 16 ø x 2.5m Copperweld Ground Rod in each pullbox. When directed by the Traffic Signal Inspector/Engineer, install additional Ground Rods. Cost of Ground Rods shall be incidental to the pullboxes.
2. All pre-cast concrete pullboxes shall be manufactured in two pieces.
3. The pullbox with cover shall be capable of supporting an MS 18 Loading.
4. The maximum weight of the pullbox cover shall not exceed 27 kilograms.
5. The openings for the conduits on all pullboxes shall be pre-cast concrete knockouts.
6. After installing the conduits in the openings of the pullboxes, the Contractor shall fill the excess opening in the pre-cast knockouts with concrete mortar.
7. Prior to installing the pullboxes, the Contractor shall level the bottom of the trench and achieve a minimum of 95% relative compaction of the bottom of the trench.
8. All concrete shall be Class A (21 MPa (3,000 psi), min.)
9. Rebars shall be Grade 300 and all lapped splices shall be 360mm minimum.
10. The •57 or •67 size aggregate shall conform to latest version of AASHTO M43 (ASTM D 448).
11. Type "C" Pullbox shall be installed in a location protected from vehicular traffic (i.e. raised sidewalk, behind A.C. curbs, traffic signal standard or pipe guards).

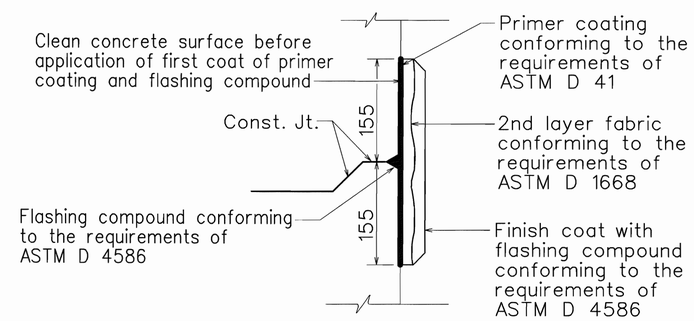

TYPICAL FLASHING COMPOUND WATERPROOFING DETAILS

ALL DIMENSIONS ARE IN MILLIMETERS UNLESS OTHERWISE SHOWN

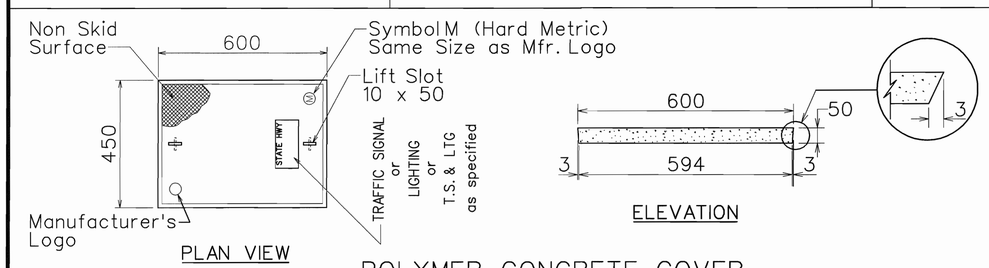

POLYMER CONCRETE COVER

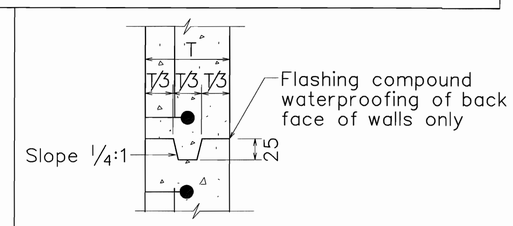

TYPICAL CONSTRUCTION JOINT DETAIL

ORIGINAL PLAN	SURVEY PLOTTED BY	DATE
	SURVEY BY	
	PLANS BY	
	TRACED BY	
NOTE BOOK	DESIGNED BY	
No. 2/a/002	QUANTITIES BY	
	CHECKED BY	

STATE OF HAWAII
DEPARTMENT OF TRANSPORTATION
HIGHWAYS DIVISION

PULLBOX & COVER DETAILS

KAHUAPAANI STREET RESURFACING
Moanalua Freeway to Salt Lake Blvd.
Federal Aid Project No. STP-7241(002)

Not to Scale — Date: Dec. 2011

SHEET No. E5 OF 5 SHEETS