FED. ROAD DIST. NO.	STATE	FED. AID PROJ. NO.	FISCAL YEAR	SHEET NO.	TOTAL SHEETS
HAWAII	HAW.	I-HI-1(90):13	1972	41	202

DRAINAGE SUMMARY

STRUCTURES			PIPE CULVERTS		ESTIMATED QUANTITIES																													REMARKS
			ITEM	NO.	206.01	206.80	206.83	207.01	503.001	503.201	602.101		603.1020	603.6080	603.6200	603.6540	603.7200	603.7380	603.7520	603.7020	604.202	604.230	604.232	604.236	605.006	605.106	605.200		609.704	609.706	612.01	640.10	640.20	640.30	
INLET NUMBER	TYPE	STATION	FROM	TO	STRUCTURAL EXCAVATION OTHER THAN IN BRIDGES	FILTER MATERIAL	FILTER MATERIAL FOR UNDERDRAINS	DITCH & CHANNEL EXCAVATION	CONCRETE OTHER THAN IN BRIDGES	CLASS B CONCRETE OTHER THAN IN BRIDGES	REINFORCING STEEL OTHER THAN IN BRIDGES		54" RCP CL III	48" CMP 0.1382" TH'K 42" RCP CL III	54" CMP 0.1382" TH'K 48" RCP CL III	48" RCP CL V 60" CMP 0.1681" TH'K	24" CMP 0.0785" TH'K 24" RCP CL III 24" ACP CL III	36" CMP 0.1084" TH'K 30" RCP CL III 30" ACP CL III	42" CMP 0.1382" TH'K 36" RCP CL III 36" ACP CL III	18" CMP 0.0785" TH'K 18" RCP CL III 18" ACP CL III	TYPE B CASTIRON FRAME & COVER	TYPE G1214 STEEL FRAME & GRATE	TYPE A-12 STEEL FRAME & GRATE	TYPE G1614 FRAME & GRATE	6" PERFORATED UNDERDRAIN PIPE	6" NON PERFORATED UNDERDRAIN PIPE	CLEANOUTS		BIT. GUTTER TYPE 7A	BIT. GUTTER TYPE 7B	GROUTED RUBBLE PAVING	LINED DRAINAGE DITCHES VEE SHAPED	LINED DRAINAGE DITCHES TRAP. SHAPED	LINED DRAINAGE DITCHES RECT. SHAPED	
			UNIT	USE	CY	CY	CY	CY	CY	CY	LB		LF	LF	LF	LF	LF	LF	LF	LF	EA	EA	EA	EA	LF	LF	EA		LF	LF	CY	LF	LF	LF	
1A	HEADWALL	MF 171+80, 84' RT			15					5	75																								
1B	DI TYPE A	L 14+25, 72' LT	L 14+25, LT.	K 20+62, 65' LT	195					5.5	345					290																			
2	HEADWALL	K 20+62, 65' LT.			15					5	75																								
3	DI TYPE A	K 19+63, 35' RT.	K 19+63, RT.	K 18+77, 60' LT	205					3.5	245							174																	
4	DI TYPE B	IR 256+40, 71' LT.	IR 256+40, LT	P 13+04, 66' RT.	485					6.5	415		240																						
5	DI TYPE G1214	K 13+50, 16' RT.	K 13+50, RT.	K 14+00, 13.5' RT.	45				2.3		35						50					1													
6	DI TYPE G1214	K 14+00, 13.5' RT.	K 14+00, RT.	K 14+40, 12.2' RT.	65				2.6		45							40				1													
7	DI TYPE G1214	K 14+40, 12.2' RT.	K 14+40 RT.	K 14+50, 12' RT.	30				3.3		240							10				1													
8	DI TYPE G1214	K 14+50, 12' RT.	K 14+50 RT.	P 15+00, 47' LT.	390				4.3		320								196			1													
9	DI TYPE B	P 15+00, 47' LT	P 15+00, LT.	P 15+00, 28' RT.	255					6	450			76																					
10	MH TYPE E	P 15+00, 28' RT.	P 15+00, RT.	P 13+04, 66' RT.	730					6.7	185				200						1														
11	SPECIAL MH	P 13+04, 66' RT.			20				6.4		575																								
12	CB TYPE SA-2	IR 252+90 ℄	IR 252+90 ℄	IR 252+40 ℄	20				3.6		180						50						2												
13	CB TYPE SA-1	IR 252+40 ℄	IR 252+40 ℄	WE 252+13, 95' RT.	60				2.8		140						110						1												
	UNDERDRAINS	RAMP O & P			175		130																		1440	10	6								
	"	RAMP K & L			120		110																		1385	15	4								
	"	RAMP EW & WE			190		105																		1275	10	6								
	"	HALAWA HEIGHTS ROAD			5		5																												
	"	INTERSTATE ROUTE			190		170																		2200	20	6								
	HALAWA STREAM CHANNEL UNDER STRUCTURE #11					105			47		1250																								
	SUBTOTAL SHEETS 2DA, 2D & 3D				271			3079	19.5	7.1	890						350			62	3			7					2455	2428	3.8	1251	1885	185	
			TOTAL		3481	105	520	3079	91.8	45.3	5465		240	76	200	290	560	224	196	62	4	4	3	7	6300	55	22		2455	2428	3.8	1251	1855	185	
			ROUNDED TOTAL		3483	105	520	3080	92	45	5465		240	76	200	290	560	224	196	62	4	4	3	7	6300	55	22		2455	2430	4	1255	1855	185	

SEE HALAWA STREAM STRUCTURE PLANS FOR QUANTITIES

ORIGINAL PLAN — NOTE BOOK No. — SURVEY PLOTTED BY — DRAWN BY — TRACED BY — DESIGNED BY — QUANTITIES BY — CHECKED BY — DATE

J. ANDREW SCHUCHARDT — REGISTERED PROFESSIONAL ENGINEER No. 2229 — HAWAII, U.S.A.

THIS WORK WAS PREPARED BY ME OR UNDER MY SUPERVISION.

STATE OF HAWAII
DEPARTMENT OF TRANSPORTATION
HIGHWAYS DIVISION

DRAINAGE ESTIMATED QUANTITIES
INTERSTATE ROUTE H-1
PROJECT NO. I-H1-1(90):13

DATE: DEC 24, 1970

SHEET No. 1D OF 25 SHEETS

FED. ROAD DIST. NO.	STATE	FED. AID PROJ. NO.	FISCAL YEAR	SHEET NO.	TOTAL SHEETS
HAWAII	HAW.	I-H1-1(90):13	1972	42	202

SCHEDULE OF ROADWAY LINED SWALES & DITCHES

LOCATION	TYPE	BITUMINOUS GUTTER TYPE 7A		LINED DITCHES (VEE)	LINED DITCHES (TRAPEZOIDAL)		DITCH & CHANNEL EXCAVATION
L Sta. 19+91, 16' Rt. To L Sta. 17+00, 28' Rt.	7A	285					
L Sta. 17+00, 28' Rt. To L Sta. 16+13, 50' Rt.	7A-3			80			23
L Sta. 16+13, 50 Rt. To K Sta. 19+82, 46' Rt.	3			337			101
K Sta. 19+82, 46' Rt. To K Sta. 19+63, 35' Rt.	3-14			20			5
L Sta. 17+80, 49' Lt. To L Sta. 15+65, 101' Lt.	4				252		71
MF Sta. 171+80, 84' Rt. To L Sta. 14+41, 72' Lt.	6				230		233
L Sta. 14+41, 72' Lt. To L Sta. 14+23, 72' Lt.	6-11				20		68
K Sta. 20+62, 65' Lt. To IR Sta. 255+98, 75' Lt.	6				500		508
IR Sta. 255+98, 75' Lt. To IR Sta. 256+40, 71' Lt.	6-12				42		44
P Sta. 13+04, 66' Rt. To P Sta. 12+84, 67' Rt.	13-8				20		37
P Sta. 12+84, 67' Rt. To HS Sta. 41+00, 46' Lt.	8				455		998
K Sta. 19+00, 12' Rt. To K Sta. 14+50, 12' Rt.	7A	445					
IR Sta. 265+38, 65' Lt. To K Sta. 14+50, 12' Rt.	7A	740					
IR Sta. 258+50, 53' Lt. To EW Sta. 148+50, 16' Lt.	7A	985					
EW Sta. 184+50, 16' Lt. To EW Sta. 147+13, 33' Lt.	15			140			172
IR Sta. 257+00, 64' Lt. To IR Sta. 256+40, 71' Lt.	2			55			6
P Sta. 16+34, 89' Lt. To P Sta. 15+19, 53' Lt.	5				120		45
P Sta. 15+19, 53' Lt. To P Sta. 15+00, 47' Lt.	5-10				20		8
SHS Sta. 1+06, 215' Rt. To SHS Sta. 0+38, 29' Rt.	9				226		617
P Sta. 28+50, 31' Lt. To NHS Sta. 4+09, 17.5' Rt.	1			179			18
GROUTED RUBBLE PAVING (GRP)							
CHANNEL A	3.1 CY						
GRP ITEM 612.01	3.1 CY						
SHEET TOTAL		2455		811	1885		2974
		LF		LF	LF		CY
ITEM NO.		609.704		640.10	640.20		207.01

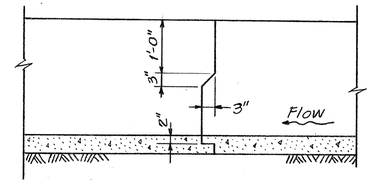

TYPICAL CONSTRUCTION JOINT @ 30' O.C.
FOR DITCHES OF 2' DEPTH OR DEEPER
Scale 3/4" = 1'-0"

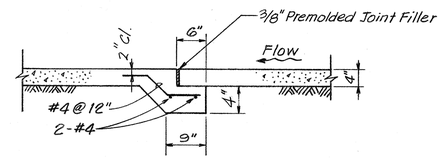

TYPICAL EXPANSION JOINT @ 90' O.C. FOR DITCHES
OF 2' DEPTH OR DEEPER
Scale: 3/4" = 1'-0"

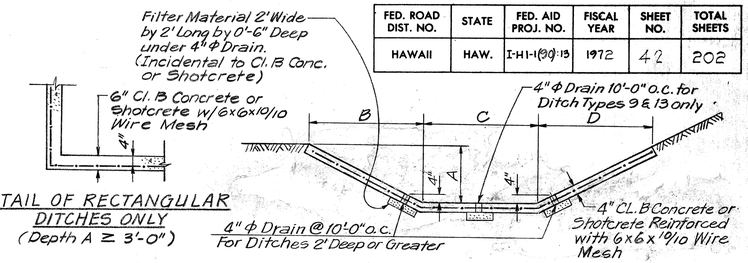

DETAIL OF RECTANGULAR
DITCHES ONLY
(Depth A ≥ 3'-0")

TYPE	A	B	C	D	CONCRETE	REINFORCING	EXCAVATION
1	1	1.5	0	1.5	0.0530 CY/LF	0.8908 #/LF	0.0987 CY/LF
2	1	2	0	2	0.0607 CY/LF	1.0209 #/LF	0.1152 CY/LF
3	2	4	0	4	0.1157 CY/LF	1.8228 #/LF	0.3579 CY/LF
4	1.5	1.5	2	1.5	0.0828 CY/LF	1.3927 #/LF	0.2829 CY/LF
5	2	2	2	2	0.1003 CY/LF	1.6869 #/LF	0.3744 CY/LF
6	4	4	2	4	0.1699 CY/LF	2.6767 #/LF	1.0151 CY/LF
							/LF
8	4	8	5	8	0.2915 CY/LF	4.9016 #/LF	2.1933 CY/LF
9	4.5	6.75	8	6.75	0.3315 CY/LF	5.5751 #/LF	2.7298 CY/LF
10	2	0	4	0	0.1667 CY/LF	1.8667 #/LF	0.4630 CY/LF
11	4	0	4	0	0.2407 CY/LF	2.6962 #/LF	0.8333 CY/LF
12	4	0	5.5	0	0.2685 CY/LF	3.0073 #/LF	1.0833 CY/LF
13	4.5	0	7	0	0.3148 CY/LF	3.5258 #/LF	1.4815 CY/LF
14	2	2	0	2	0.0756 CY/LF	1.1911 #/LF	0.1868 CY/LF
15	EW RAMP TRANSITIONAL DITCH				0.10 CY/LF	3.22 #/LF	1.23 CY/LF
16	1	0	2	0			0.167 CY/LF
17	1.5	3	0	3			0.231 CY/LF

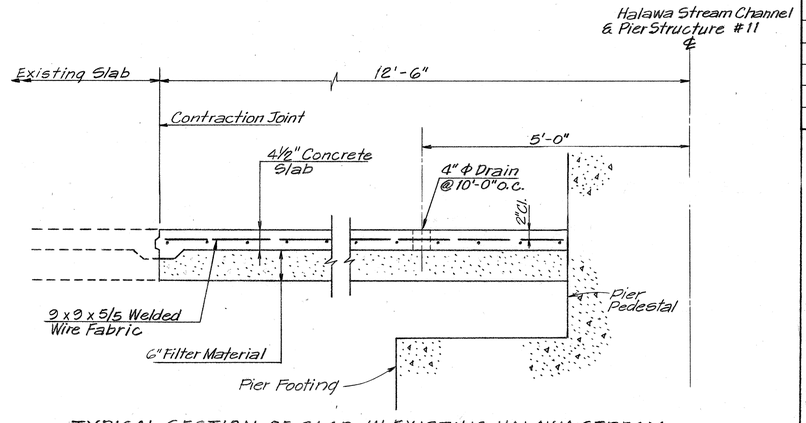

TYPICAL SECTION OF SLAB IN EXISTING HALAWA STREAM
Scale: 3/4" = 1'-0"

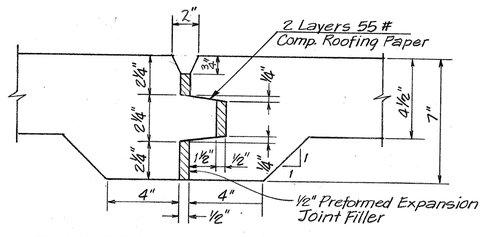

JOINT DETAIL OF SLAB IN EXISTING
HALAWA STREAM
Detail Shows Expansion Joint; Contraction Joint Similar
Except For Preformed Joint Filler and Roofing Paper.
Scale: 3" = 1'-0"

NOTES FOR HALAWA STREAM CHANNEL

1. All Concrete shall be Class A.
2. Stop Reinforcement at All Joints As Shown.
3. Match Existing Joints of Existing Slab.
4. Removal of Asphalt Pavement and Excavation Shall be Paid Under Structure Excavation.

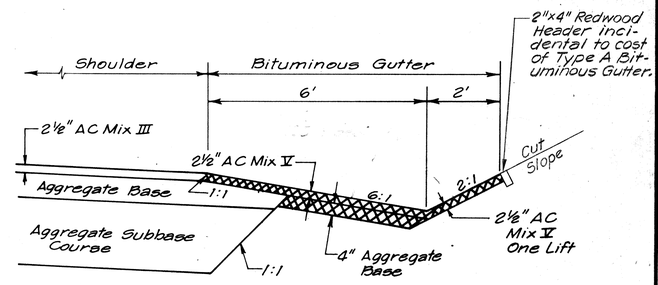

BITUMINOUS GUTTER, TYPE 7A
Scale: 1/2" = 1'-0"

GENERAL DITCH & CHANNEL NOTES

1. Contractor may substitute ditches of other shapes & of greater capacities if approved by the Engineer. Payment will be on the original ditch as shown on the plans.
2. Expansion & Construction Joints are incidental to Lined Drainage Ditches.
3. Transitions between Ditch or Gutter Types are denoted by two Digits and are paid for under the Lined Ditch Type or the Gutter Type which is the most expensive.

THIS WORK WAS PREPARED BY ME OR UNDER MY SUPERVISION.
J. Andrew Schuchardt

ANDREW SCHUCHARDT REGISTERED PROFESSIONAL ENGINEER No. 2229 HAWAII, U.S.A.

STATE OF HAWAII
DEPARTMENT OF TRANSPORTATION
HIGHWAYS DIVISION

DRAINAGE ESTIMATED QUANTITIES

INTERSTATE ROUTE H-1
PROJECT NO. I-H1-1(90):13

SCALE: AS SHOWN DATE: DEC 24, 1970

SHEET No. 2D OF 25 SHEETS

ORIGINAL PLAN
SURVEY PLOTTED BY
DRAWN BY
TRACED BY
DESIGNED BY
NOTE BOOK QUANTITIES BY
No. CHECKED BY
DATE

42

FED. ROAD DIST. NO.	STATE	FED. AID PROJ. NO.	FISCAL YEAR	SHEET NO.	TOTAL SHEETS
HAWAII	HAW.	I-H1-1(90):13	1972	42A	202

DRAINAGE SUMMARY

STRUCTURES			PIPE CULVERTS		ESTIMATED QUANTITIES																													REMARKS
INLET NUMBER	TYPE	STATION	ITEM	NO.	206.01	206.80	206.83	207.01	503.001	503.201	602.101		603.1020	603.6080	603.6200	603.6540	603.7200	603.7380	603.7520	603.7020	604.202	604.230	604.232	604.236	605.006	605.106	605.200		609.700	609.701	612.01	640.10	640.20	640.30	
			FROM	TO	STRUCTURAL EXCAVATION OTHER THAN IN BRIDGES	FILTER MATERIAL	FILTER MATERIAL FOR UNDERDRAINS	DITCH & CHANNEL EXCAVATION	CONCRETE OTHER THAN IN BRIDGES	CLASS B CONCRETE OTHER THAN IN BRIDGES	REINFORCING STEEL OTHER THAN IN BRIDGES		54" RCP CL III	48" CMP 0.1382" THK 42" RCP CL III	54" CMP 0.1382" THK 48" RCP CL III	48" RCP CL III 60" CMP 0.1084" THK	24" CMP 0.0785" THK 24" RCP CL III 24" ACP CL III	36" CMP 0.1084" THK 30" RCP CL III 30" ACP CL III	42" CMP 0.1382" THK 36" RCP CL III 36" ACP CL III	18" CMP 0.0785" THK 18" RCP CL III 18" ACP CL III	TYPE B CAST IRON FRAME & COVER	TYPE G12 & STEEL FRAME & GRATE	TYPE A-12 STEEL FRAME & GRATE	TYPE G1614 STEEL FRAME & GRATE	6" PERFORATED UNDERDRAIN PIPE	6" NON-PERFORATED UNDERDRAIN PIPE	CLEANOUTS		BIT. GUTTER TYPE 1A	BIT. GUTTER TYPE 1B	GROUTED RUBBLE PAVING	LINED DRAINAGE DITCHES VEE SHAPED	LINED DRAINAGE DITCHES TRAP. SHAPED	LINED DRAINAGE DITCHES REC. SHAPED	
			UNIT	USE	CY	CY	CY	CY	CY	CY	LB		LF	LF	LF	LF	LF	LF	LF	LF	EA	EA	EA	EA	LF	LF	EA		LF	LF	CY	LF	LF	LF	
14	D1 TYPE G1614	P 31+00, 24' RT.	P 31+00, 24' RT.	P 31+00, 84' RT.	60				2.9		220						60							1											
15	MH TYPE D	P 31+00, 84' RT.	P 31+00, 84' RT.	P 31+00, 104' RT.	25					2.5	35						20				1														
16	D1 TYPE G1614	P 29+00, 24' RT.	P 29+00, 24' RT.	P 28+84, 68' RT.	45				2.5		35						46							1											
17	MH TYPE D	P 28+84, 68' RT.	P 28+84, 68' RT.	P 28+77, 80' RT.	35					2.4	35						36				1														
18	D1 TYPE G1614	P 22+50, 18' LT.	P 22+50, 18' LT.	P 22+50, 38' LT.	10				2.1		35						20							1											
19	HALF HEADWALL	P 22+50, 38' LT.			1				.3		20																				.7				
20	D1 TYPE G1614	0 14+09.4, 8' RT.	0 14+09.4, 8' RT.	0 14+09.4, 85' RT.	5				2.5		35						78							1											
21	MH TYPE D	0 14+09.4, 85' RT.	0 14+09.4, 85' RT.	NHS 5+38, 17.5' RT.	15					2.2	35						40				1														
22	D1 TYPE G1614	L 13+60, 12' RT.	L 13+60, 12' RT.	K 21+72, 29' LT.	10				2.1		35						50							1											
23	HALF HEADWALL	K 21+72, 29' LT.							.3		20																								
24	D1 TYPE G1614	EW 143+75, 12' LT.	EW 143+75, 12' LT.	EW 143+82, 43' LT.	45				4.7		350									32				1											
25	D1 TYPE G1614	EW 146+50, 12' LT.	EW 146+50, 12' LT.	EW 146+50, 41' LT.	20				2.1		35									30				1											
				SUBTOTAL	271				19.5	7.1	890						350			62	3			7							.7				

ORIGINAL PLAN	SURVEY PLOTTED BY	DATE
	DRAWN BY	"
	TRACED BY	"
	DESIGNED BY	"
NOTE BOOK	QUANTITIES BY	"
No.	CHECKED BY	"

STATE OF HAWAII
DEPARTMENT OF TRANSPORTATION
HIGHWAYS DIVISION

DRAINAGE ESTIMATED QUANTITIES

INTERSTATE ROUTE H-1
PROJ. NO. I-H1-1(90):13

SCALE: NONE DATE:

SHEET No. 2DA OF 25 SHEETS

42A

FED. ROAD DIST. NO.	STATE	FED. AID PROJ. NO.	FISCAL YEAR	SHEET NO.	TOTAL SHEETS
HAWAII	HAW.	I-HI-1(90)-13	1972	43	202

SCHEDULE OF ROADWAY LINED SWALES & DITCHES

LOCATION	TYPE	BITUMINOUS GUTTER TYPE 7A	BITUMINOUS GUTTER TYPE 7B		LINED DITCHES (VEE)	LINED DITCHES (TRAPEZOIDAL)	LINED DITCHES (RECTANGULAR)	DITCH & CHANNEL EXCAVATION
EW STA 139+72, 12' LT. TO EW STA 147+25, 12' LT.	7B		753					
EW STA 147+25, 12' LT. TO EW STA 147+50, 12' LT.	7B *		25					
L STA 11+75, 12' RT. TO L STA 13+64, 12' RT	7B		199					
K STA 21+72, 29' LT. TO K STA 20+62, 65' LT.	16						110	18
P STA 33+58, 24' RT. TO P STA 28+96, 24' RT.	7B		462					
O STA 10+95, 10' RT. TO O STA 14+15, 8' RT.	7B		320					
O STA 15+62, 8' RT. TO O STA 17+50, 8' RT.	7B		188					
O STA 17+50, 8' RT. TO O STA 18+06, 24' RT	7B-2				56			7
O STA 18+06, 24' RT. TO O STA 18+49, 105' RT	2				94			11
O STA 21+57, 9' RT. TO O STA 20+20, 8' RT.	7B		137					
O STA 20+20, 8' RT. TO O STA 19+65, 22' RT.	7B-17				43			10
O STA 19+65, 22' RT. TO NHS STA 4+86, 17.5' LT	17				247			47
P STA 25+90, 18' LT. TO P STA 22+46, 18' LT	7B		344					
H-3 STA 265+20, 70' LT. TO IR STA 265+00, 65' LT.	16						20	3
MF STA 171+15 90' RT. TO L STA 13+80, 115' LT.	16						55	9
SUBTOTAL SHEET 2D		2455			811	1885		2974
SUBTOTAL SHEETS 2D & 3D		2455	2428		1251	1885	185	3079
		LF	LF		LF	LF	LF	CY
ITEM NO.		609.704	609.706		640.10	640.20	640.30	207.01

* TRANSITION

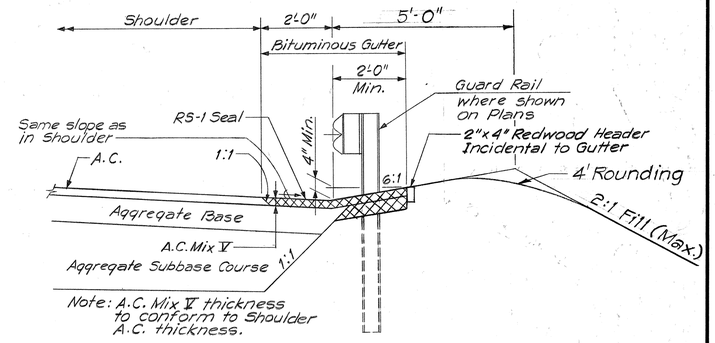

BITUMINOUS GUTTER TYPE 7B
Scale: 1/2" = 1'-0"

ORIGINAL PLAN | NOTE BOOK No. | SURVEY PLOTTED BY | DRAWN BY | TRACED BY | DESIGNED BY | QUANTITIES BY | CHECKED BY | DATE

THIS WORK WAS PREPARED BY ME OR UNDER MY SUPERVISION.

J. Andrew Schuchardt

J. ANDREW SCHUCHARDT REGISTERED PROFESSIONAL ENGINEER No. 2229 HAWAII, U.S.A.

STATE OF HAWAII
DEPARTMENT OF TRANSPORTATION
HIGHWAYS DIVISION

DRAINAGE ESTIMATED QUANTITIES

INTERSTATE ROUTE H-1
PROJECT NO. I-HI-1 (90):13

SCALE: AS SHOWN DATE: DEC. 24, 1970

SHEET No. 3D OF 25 SHEETS

43

PRINTED ON NO. 1000H CLEARPRINT

FED. ROAD DIST. NO.	STATE	FED. AID PROJ. NO.	FISCAL YEAR	SHEET NO.	TOTAL SHEETS
HAWAII	HAW.	I-HI-1(90):13	1972	44	202

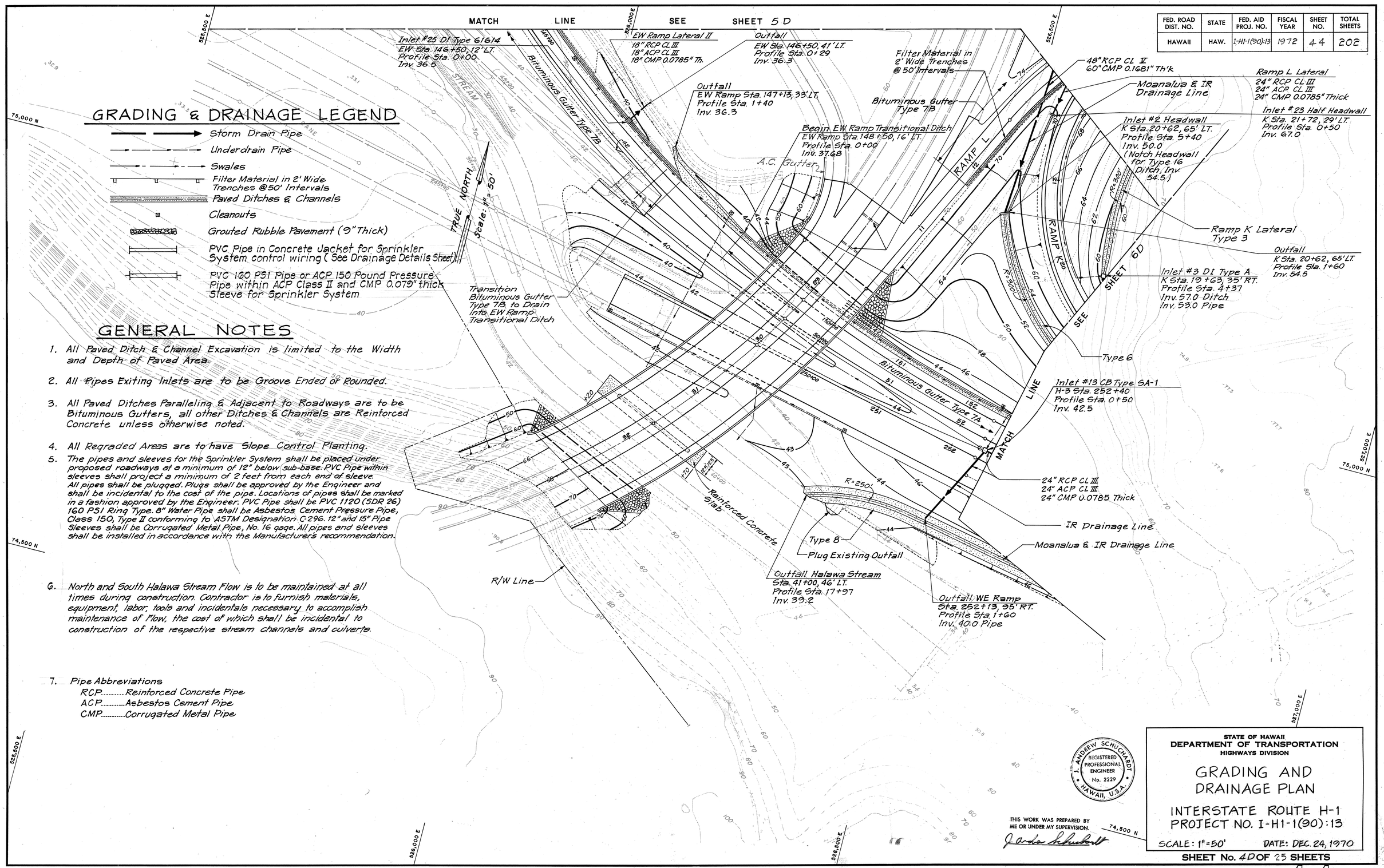

GRADING & DRAINAGE LEGEND

- Storm Drain Pipe
- Underdrain Pipe
- Swales
- Filter Material in 2' Wide Trenches @50' Intervals
- Paved Ditches & Channels
- Cleanouts
- Grouted Rubble Pavement (9" Thick)
- PVC Pipe in Concrete Jacket for Sprinkler System control wiring (See Drainage Details Sheet)
- PVC 160 PSI Pipe or ACP 150 Pound Pressure Pipe within ACP Class II and CMP 0.079" thick Sleeve for Sprinkler System

GENERAL NOTES

1. All Paved Ditch & Channel Excavation is limited to the Width and Depth of Paved Area.
2. All Pipes Exiting Inlets are to be Groove Ended or Rounded.
3. All Paved Ditches Paralleling & Adjacent to Roadways are to be Bituminous Gutters, all other Ditches & Channels are Reinforced Concrete unless otherwise noted.
4. All Regraded Areas are to have Slope Control Planting.
5. The pipes and sleeves for the Sprinkler System shall be placed under proposed roadways at a minimum of 12" below sub-base. PVC Pipe within sleeves shall project a minimum of 2 feet from each end of sleeve. All pipes shall be plugged. Plugs shall be approved by the Engineer and shall be incidental to the cost of the pipe. Locations of pipes shall be marked in a fashion approved by the Engineer. PVC Pipe shall be PVC 1120 (SDR 26) 160 PSI Ring Type. 8" Water Pipe shall be Asbestos Cement Pressure Pipe, Class 150, Type II conforming to ASTM Designation C-296. 12" and 15" Pipe Sleeves shall be Corrugated Metal Pipe, No. 16 gage. All pipes and sleeves shall be installed in accordance with the Manufacturer's recommendation.
6. North and South Halawa Stream Flow is to be maintained at all times during construction. Contractor is to furnish materials, equipment, labor, tools and incidentals necessary to accomplish maintenance of flow, the cost of which shall be incidental to construction of the respective stream channels and culverts.
7. Pipe Abbreviations
   - RCP.....Reinforced Concrete Pipe
   - ACP.....Asbestos Cement Pipe
   - CMP.....Corrugated Metal Pipe

ORIGINAL PLAN		DATE
	SURVEY PLOTTED BY	
	DRAWN BY	" " " "
	TRACED BY	" " " "
	DESIGNED BY	" " " "
NOTE BOOK	QUANTITIES BY	
No.	CHECKED BY	

J. ANDREW SCHUCHARDT
REGISTERED PROFESSIONAL ENGINEER
No. 2229
HAWAII, U.S.A.

THIS WORK WAS PREPARED BY ME OR UNDER MY SUPERVISION.

J. Andrew Schuchardt

STATE OF HAWAII
DEPARTMENT OF TRANSPORTATION
HIGHWAYS DIVISION

GRADING AND DRAINAGE PLAN

INTERSTATE ROUTE H-1
PROJECT NO. I-H1-1(90):13

SCALE: 1" = 50' DATE: DEC. 24, 1970

SHEET No. 4D OF 25 SHEETS

FED. ROAD DIST. NO.	STATE	FED. AID PROJ. NO.	FISCAL YEAR	SHEET NO.	TOTAL SHEETS
HAWAII	HAW.	I-H1-1(90):13	1972	45	202

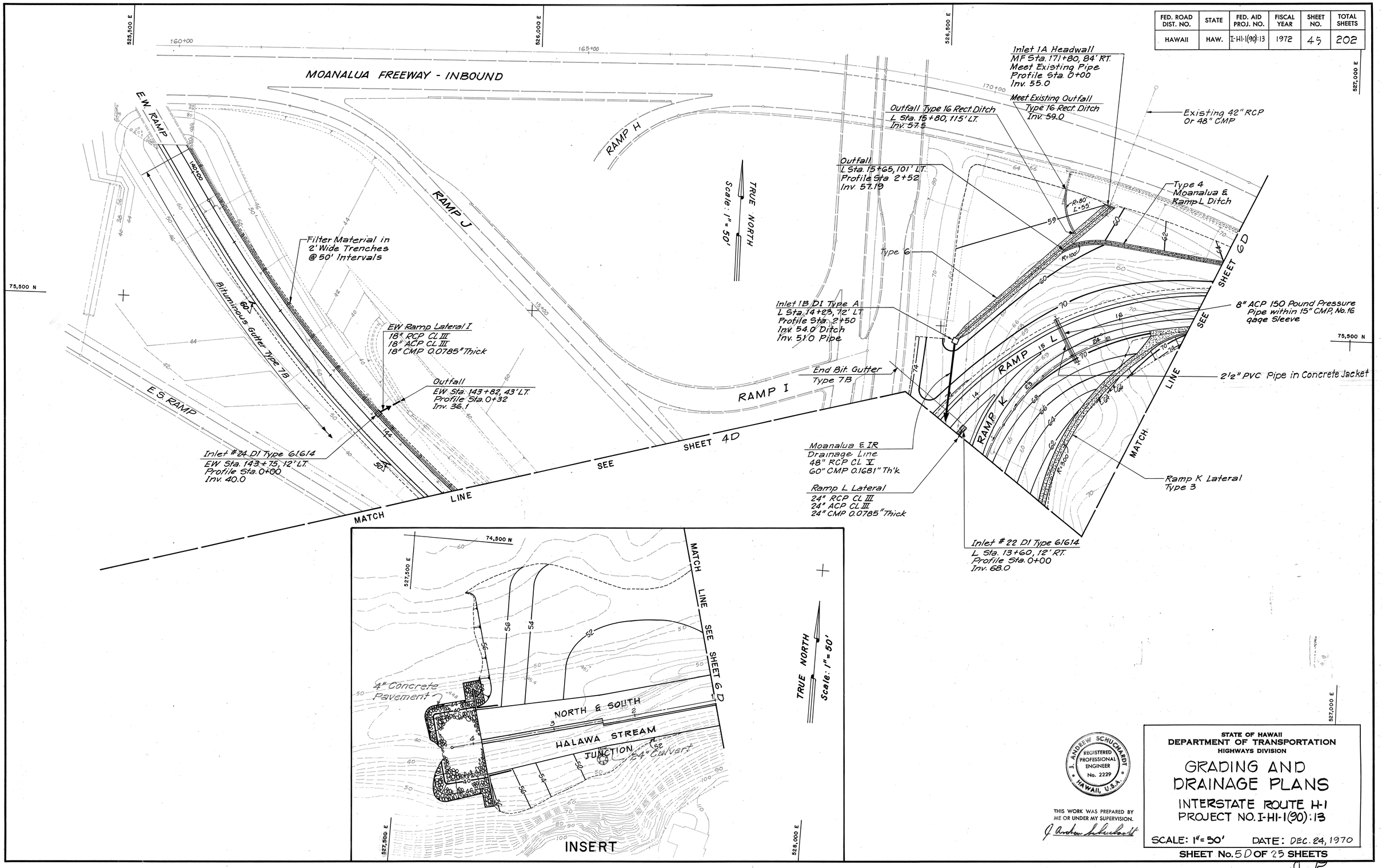

ORIGINAL PLAN		DATE
	SURVEY PLOTTED BY	
	DRAWN BY	" "
	TRACED BY	" "
	DESIGNED BY	" "
NOTE BOOK	QUANTITIES BY	" "
No.	CHECKED BY	" "

J. ANDREW SCHUCHARDT
REGISTERED PROFESSIONAL ENGINEER
No. 2229
HAWAII, U.S.A.

THIS WORK WAS PREPARED BY ME OR UNDER MY SUPERVISION.

J. Andrew Schuchardt

STATE OF HAWAII
DEPARTMENT OF TRANSPORTATION
HIGHWAYS DIVISION

GRADING AND DRAINAGE PLANS

INTERSTATE ROUTE H-1
PROJECT NO. I-H1-1(90):13

SCALE: 1" = 50' DATE: DEC. 24, 1970

SHEET No. 5D OF 25 SHEETS

FED. ROAD DIST. NO.	STATE	FED. AID PROJ. NO.	FISCAL YEAR	SHEET NO.	TOTAL SHEETS
HAWAII	HAW.	I-HI-1(90)-13	1972	46	202

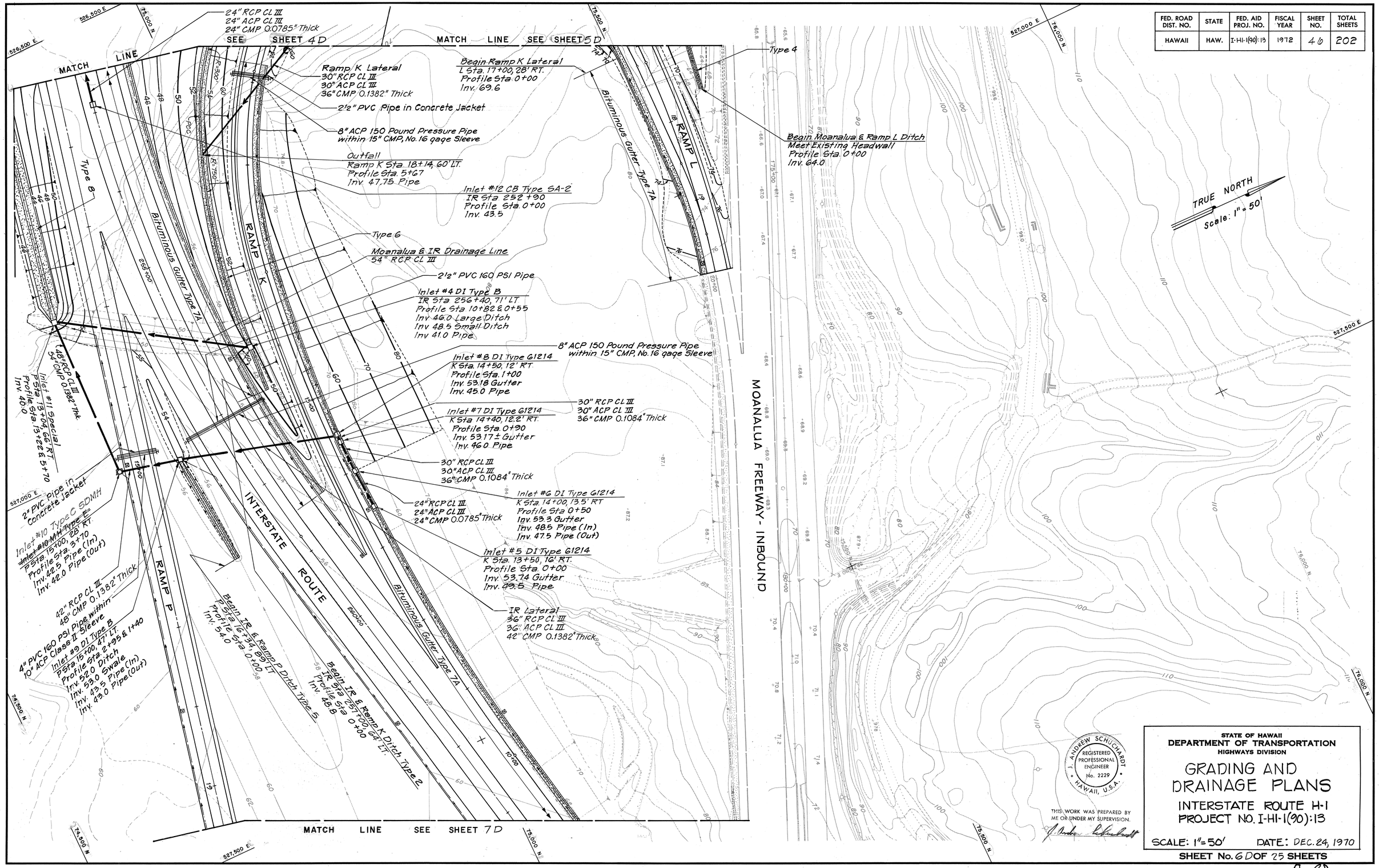

ORIGINAL PLAN	SURVEY PLOTTED BY	DATE
	DRAWN BY	
	TRACED BY	
NOTE BOOK	DESIGNED BY	
	QUANTITIES BY	
No.	CHECKED BY	

J. ANDREW SCHUCHARDT
REGISTERED PROFESSIONAL ENGINEER
No. 2229
HAWAII, U.S.A.

THIS WORK WAS PREPARED BY ME OR UNDER MY SUPERVISION.

STATE OF HAWAII
DEPARTMENT OF TRANSPORTATION
HIGHWAYS DIVISION

GRADING AND DRAINAGE PLANS

INTERSTATE ROUTE H-1
PROJECT NO. I-HI-1(90):13

SCALE: 1"=50' DATE: DEC. 24, 1970

SHEET No. 6D OF 25 SHEETS

4 6

FED. ROAD DIST. NO.	STATE	FED. AID PROJ. NO.	FISCAL YEAR	SHEET NO.	TOTAL SHEETS
HAWAII	HAW.	I-H1-1(90):13	1972	47	202

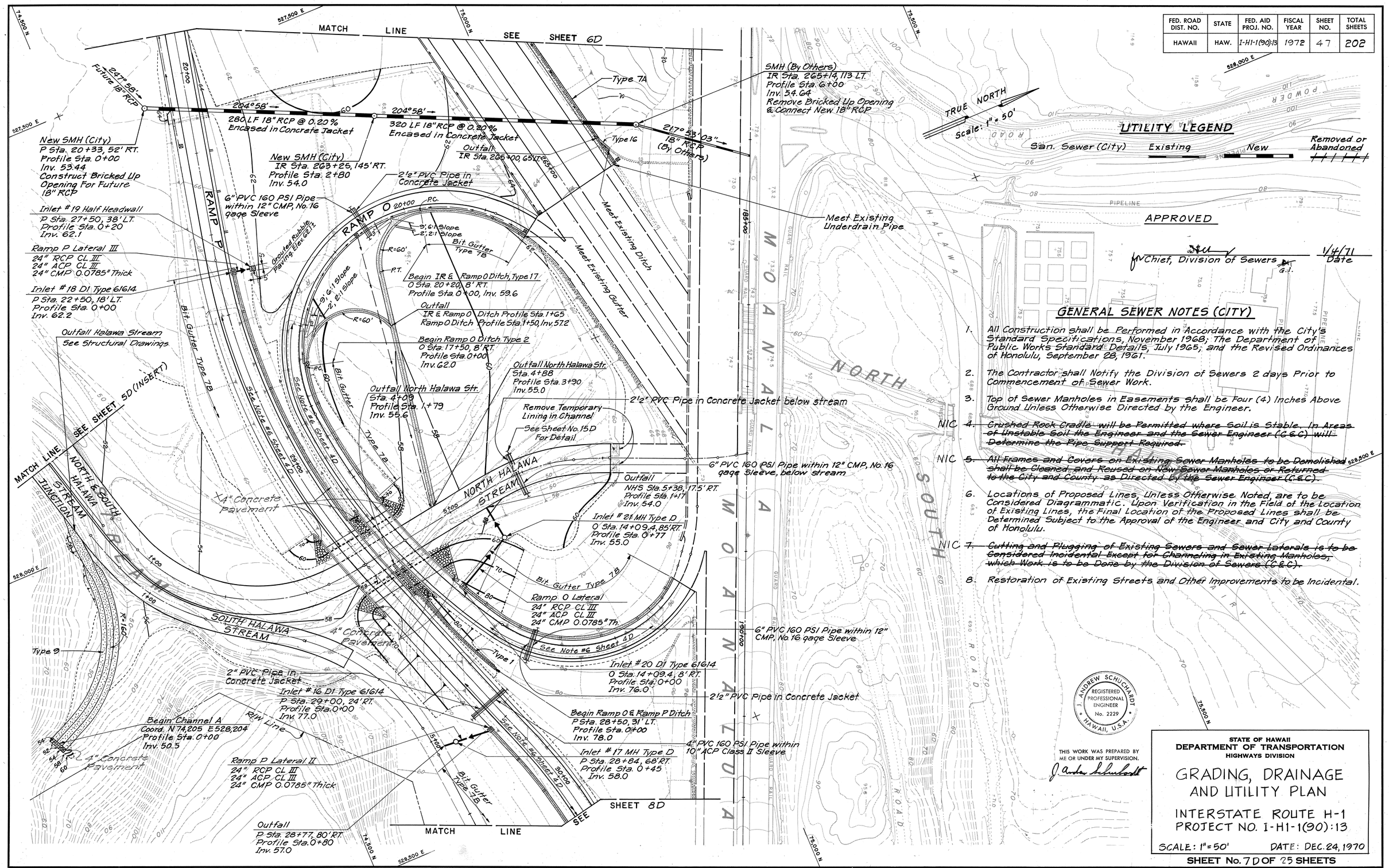

ORIGINAL PLAN		
	SURVEY PLOTTED BY	DATE
	DRAWN BY	"
	TRACED BY	"
NOTE BOOK	DESIGNED BY	"
	QUANTITIES BY	"
No.	CHECKED BY	"

FED. ROAD DIST. NO.	STATE	FED. AID PROJ. NO.	FISCAL YEAR	SHEET NO.	TOTAL SHEETS
HAWAII	HAW.	I-H1-1(90):13	1972	48	202

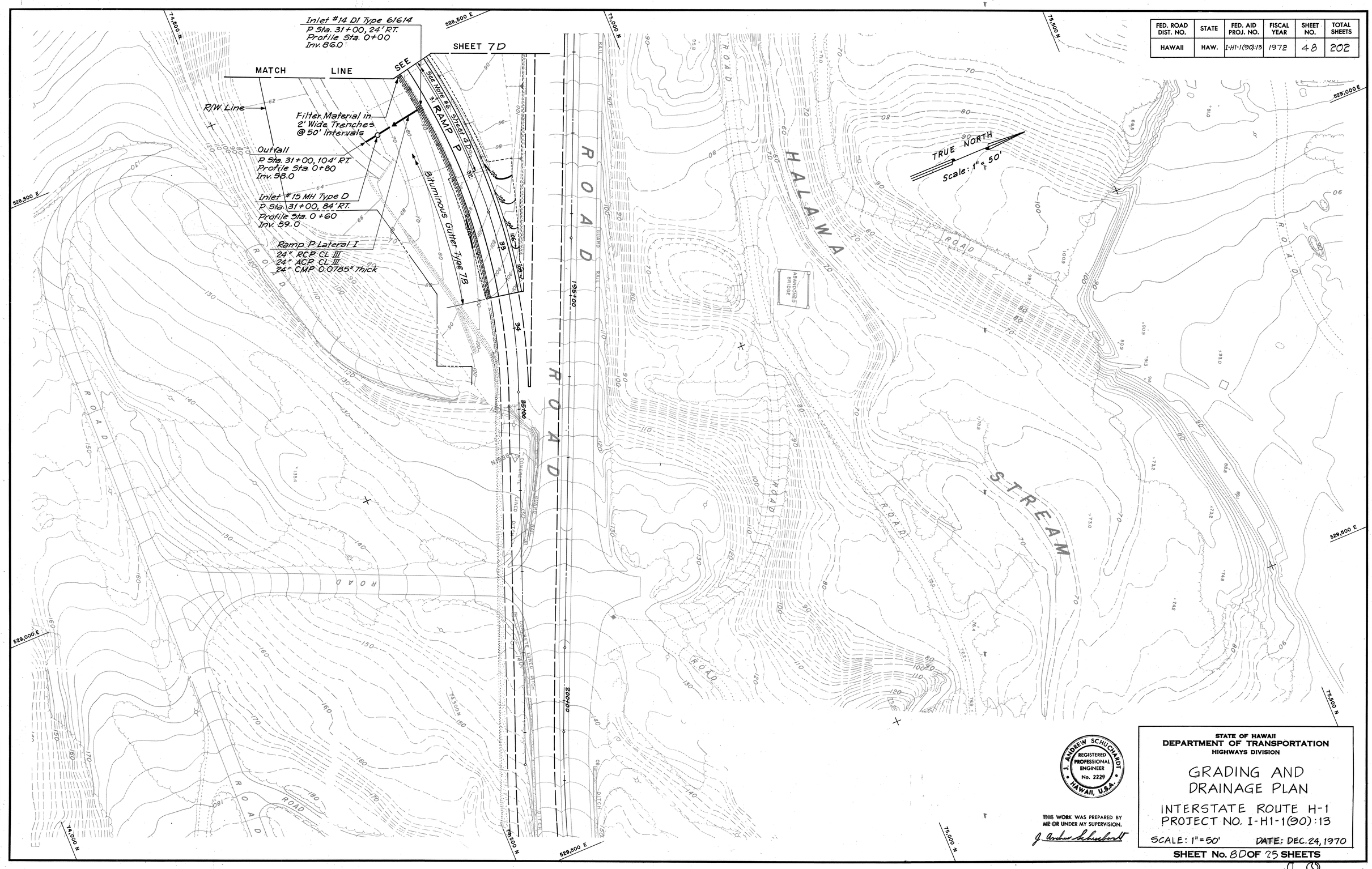

ORIGINAL PLAN		DATE
NOTE BOOK No.	SURVEY PLOTTED BY	
	DRAWN BY	
	TRACED BY	
	DESIGNED BY	
	QUANTITIES BY	
	CHECKED BY	

J. ANDREW SCHUCHARDT
REGISTERED PROFESSIONAL ENGINEER
No. 2229
HAWAII, U.S.A.

THIS WORK WAS PREPARED BY ME OR UNDER MY SUPERVISION.

J. Andrew Schuchardt

STATE OF HAWAII
DEPARTMENT OF TRANSPORTATION
HIGHWAYS DIVISION

GRADING AND DRAINAGE PLAN

INTERSTATE ROUTE H-1
PROJECT NO. I-H1-1(90):13

SCALE: 1" = 50' DATE: DEC. 24, 1970

SHEET No. 8D OF 25 SHEETS

48

FED. ROAD DIST. NO.	STATE	FED. AID PROJ. NO.	FISCAL YEAR	SHEET NO.	TOTAL SHEETS
HAWAII	HAW.	I-H1-1(90):13	1972	48A	202

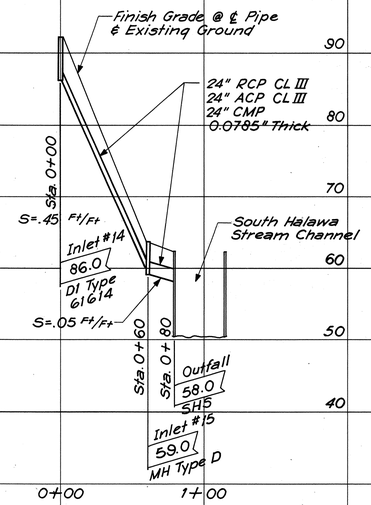

RAMP P LATERAL I

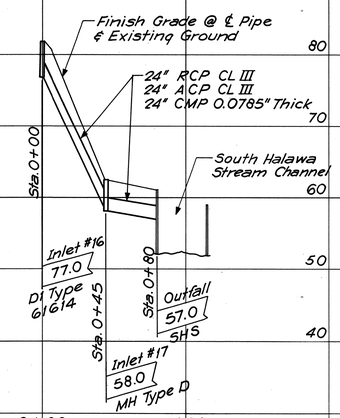

RAMP P LATERAL II

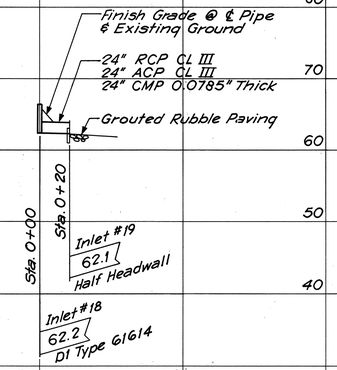

RAMP P LATERAL III

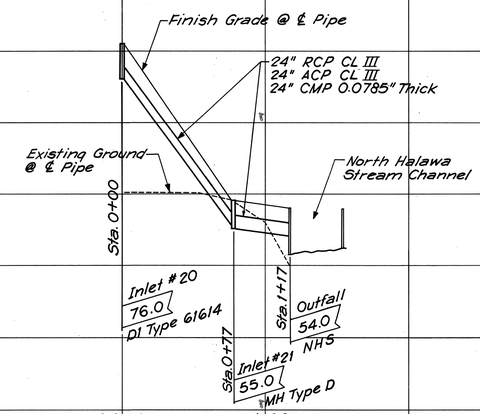

RAMP O LATERAL

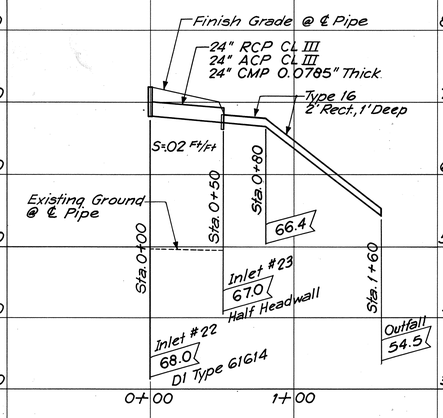

RAMP L LATERAL

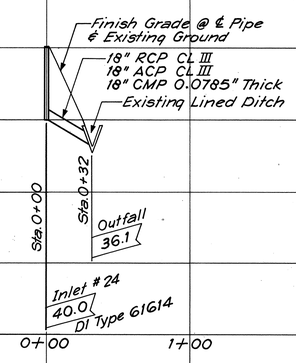

EW RAMP LATERAL I

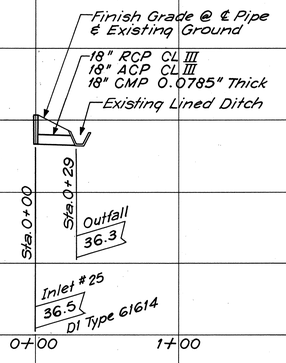

EW RAMP LATERAL II

MARTIN RUBIN
REGISTERED PROFESSIONAL ENGINEER
No. 1841
HAWAII, U.S.A.

THIS WORK WAS PREPARED BY ME OR UNDER MY SUPERVISION.

Martin Rubin

STATE OF HAWAII
DEPARTMENT OF TRANSPORTATION
HIGHWAYS DIVISION

DRAINAGE PROFILES

INTERSTATE ROUTE H-1
PROJ. NO. I-H1-1(90):13

SCALES: Horiz. 1" = 50'
Vert. 1" = 10' DATE:

SHEET No. 8DA OF 25 SHEETS

ORIGINAL PLAN
SURVEY PLOTTED BY
DRAWN BY
TRACED BY
DESIGNED BY
QUANTITIES BY
CHECKED BY
DATE
NOTE BOOK
No.

48A

FED. ROAD DIST. NO.	STATE	FED. AID PROJ. NO.	FISCAL YEAR	SHEET NO.	TOTAL SHEETS
HAWAII	HAW.	I-H1-1(90)13	1972	49	202

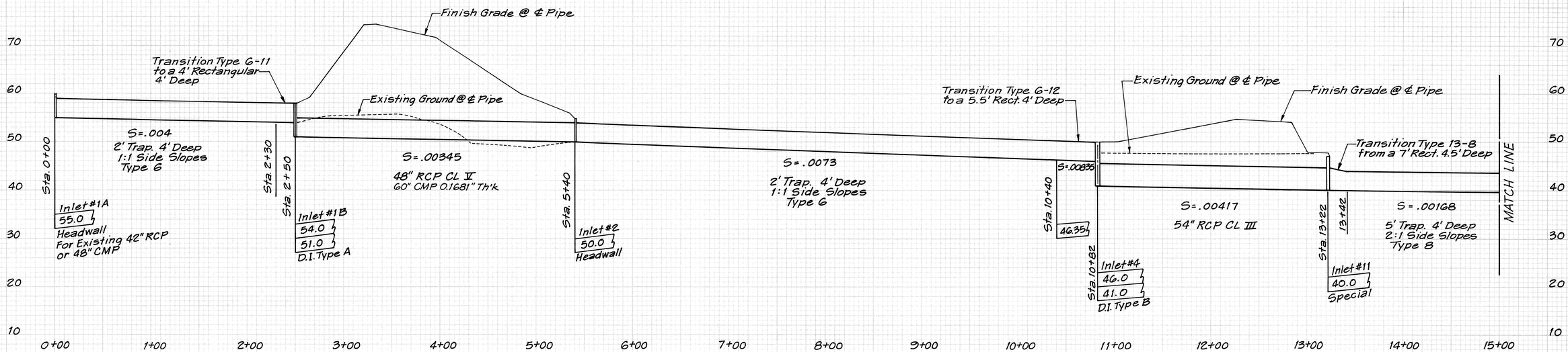

MOANALUA & IR DRAINAGE LINE

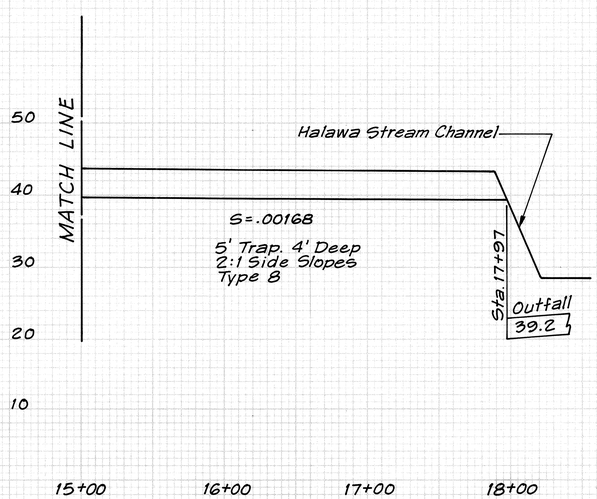

MOANALUA & IR DRAINAGE LINE

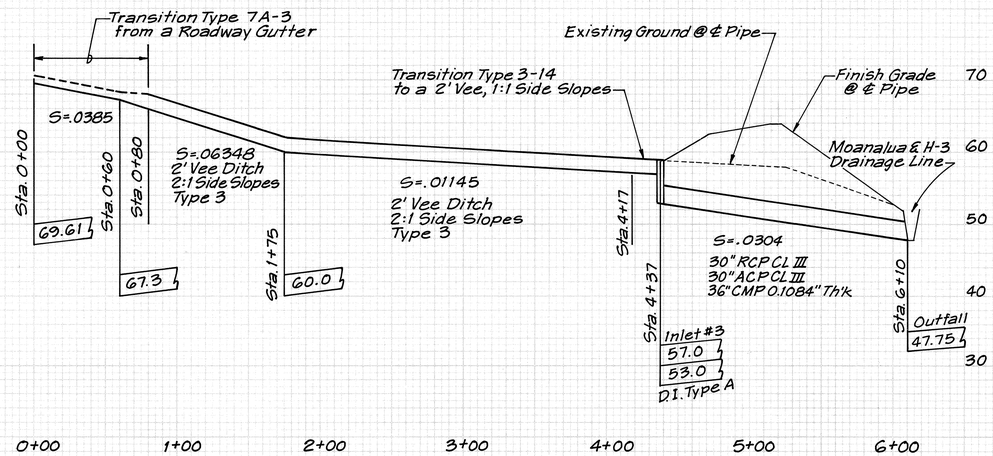

RAMP K LATERAL

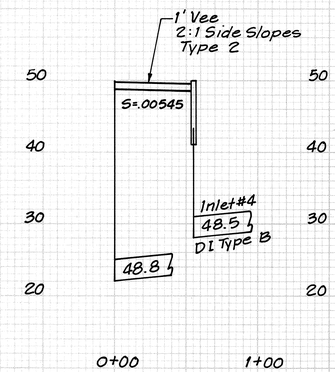

IR & RAMP K DITCH

THIS WORK WAS PREPARED BY ME OR UNDER MY SUPERVISION.

J. Andrew Schuchardt

J. ANDREW SCHUCHARDT REGISTERED PROFESSIONAL ENGINEER No. 2229 HAWAII, U.S.A.

DRAINAGE PROFILES

Scales: Horiz. 1" = 50'
Vert. 1" = 10'

Slope in FT/FT

49

SHEET NO. 2D OF 25 SHEETS

PLATE 3 —CROSS SECTION O. P. R. & R. E. STANDARD
THE FREDERICK POST CO., CHICAGO

FED. ROAD DIST. NO.	STATE	FED. AID PROJ. NO.	FISCAL YEAR	SHEET NO.	TOTAL SHEETS
HAWAII	HAW.	I-H1-1(20)13	1972	50	202

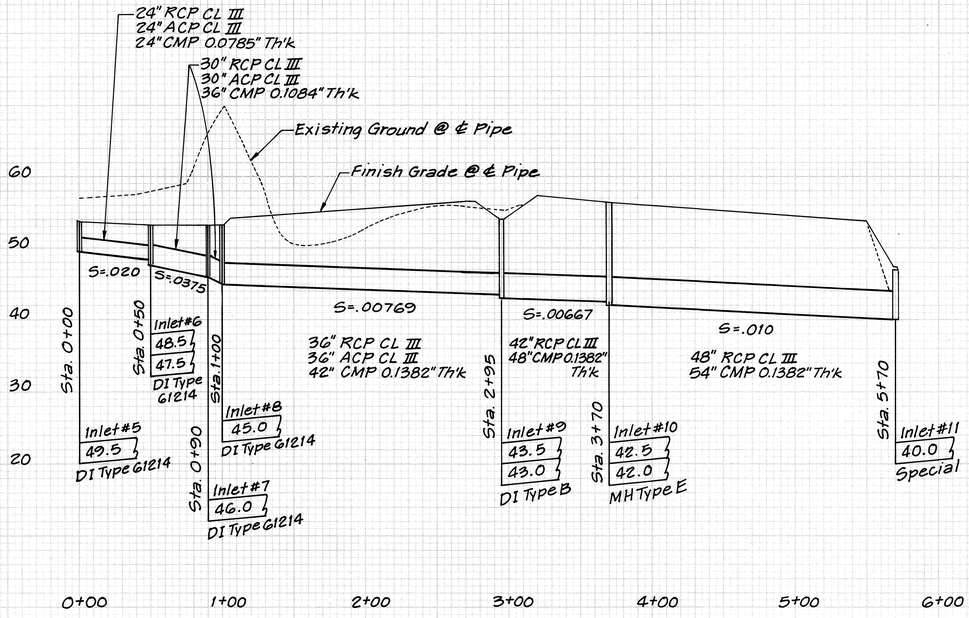

IR LATERAL

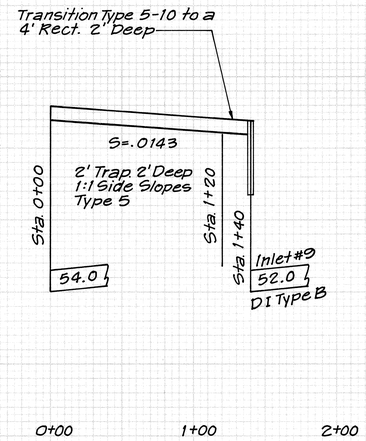

IR & RAMP P DITCH

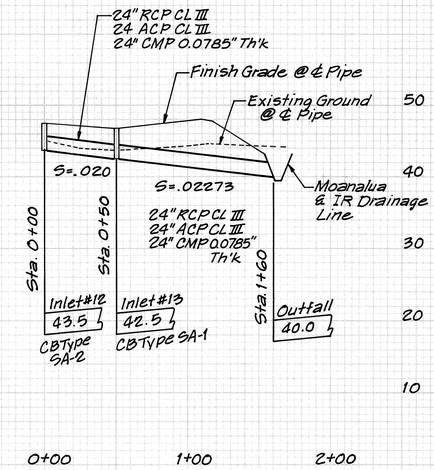

IR DRAINAGE LINE

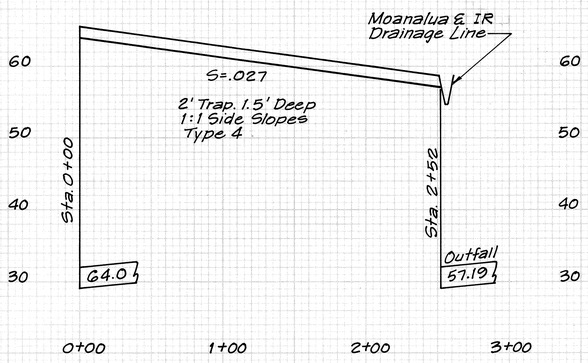

MOANALUA & RAMP L DITCH

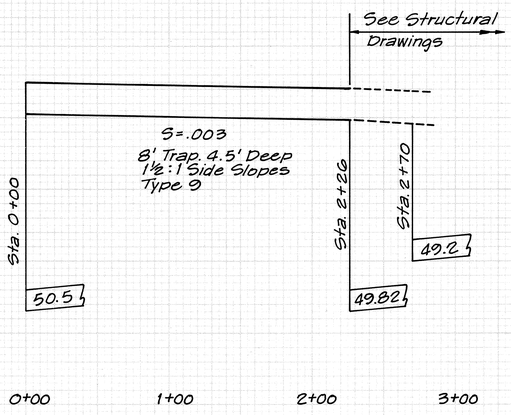

CHANNEL A

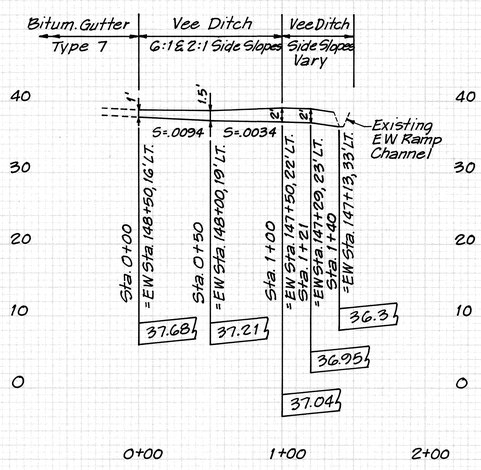

EW RAMP TRANSITIONAL DITCH

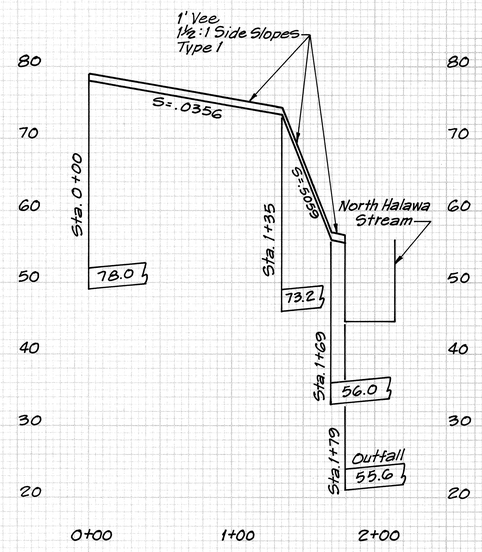

RAMP O & RAMP P DITCH

THIS WORK WAS PREPARED BY ME OR UNDER MY SUPERVISION.

J. Andrew Schuchardt

ANDREW SCHUCHARDT
REGISTERED PROFESSIONAL ENGINEER
No. 2229
HAWAII, U.S.A.

DRAINAGE PROFILES

Scales: Horiz. 1" = 50'
Vert. 1" = 10'

Slopes in FT/FT

50 (1) SHEET NO. 10D OF 25 SHEETS

PLATE 3 —CROSS SECTION O. P. R. & R. E. STANDARD
THE FREDERICK POST CO., CHICAGO

FED. ROAD DIST. NO.	STATE	FED. AID PROJ. NO.	FISCAL YEAR	SHEET NO.	TOTAL SHEETS
HAWAII	HAW.	I-H1-1(90):13	1972	51	202

Rectangular Channel Stems See Standard Retaining Walls Type T1 Sheet 155 and Typical Section Sheet 151

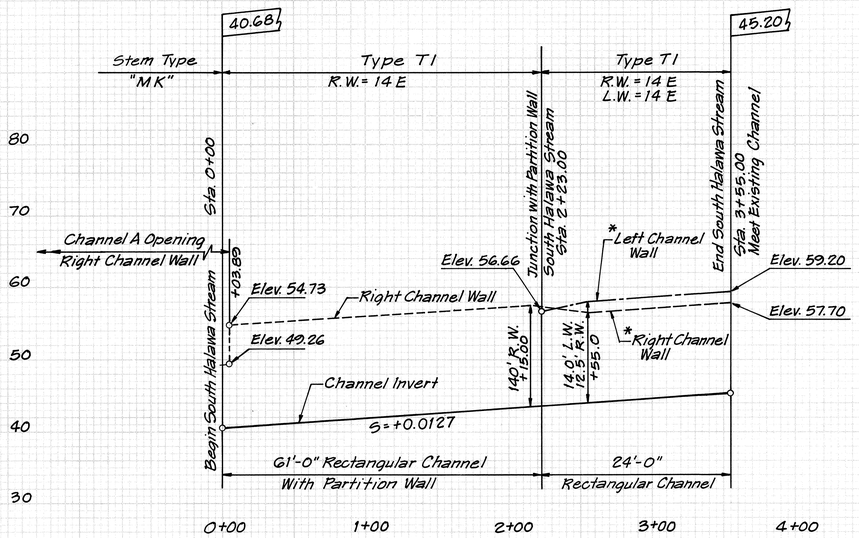

SOUTH HALAWA STREAM

*NOTE: Right & Left Channel Wall is Determined by Looking Up Stream in All Stream Profiles.

R.W. = Right Wall
L.W. = Left Wall

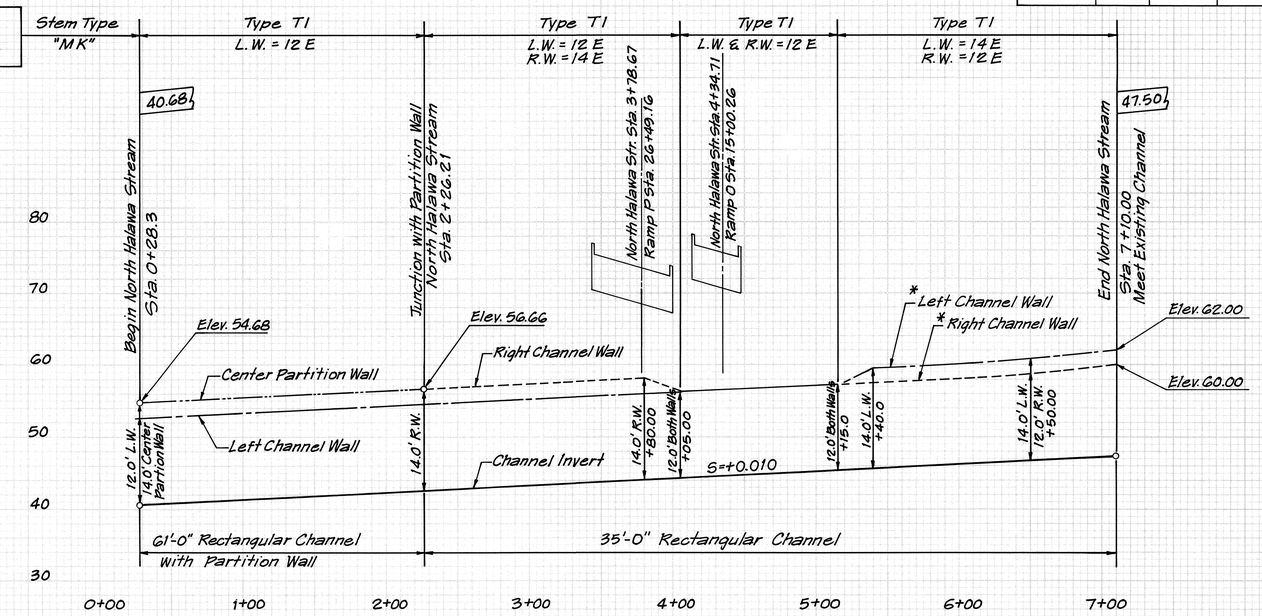

NORTH HALAWA STREAM

THIS WORK WAS PREPARED BY ME OR UNDER MY SUPERVISION.

J. Andrew Schuchardt

J. ANDREW SCHUCHARDT REGISTERED PROFESSIONAL ENGINEER No. 2229 HAWAII, U.S.A.

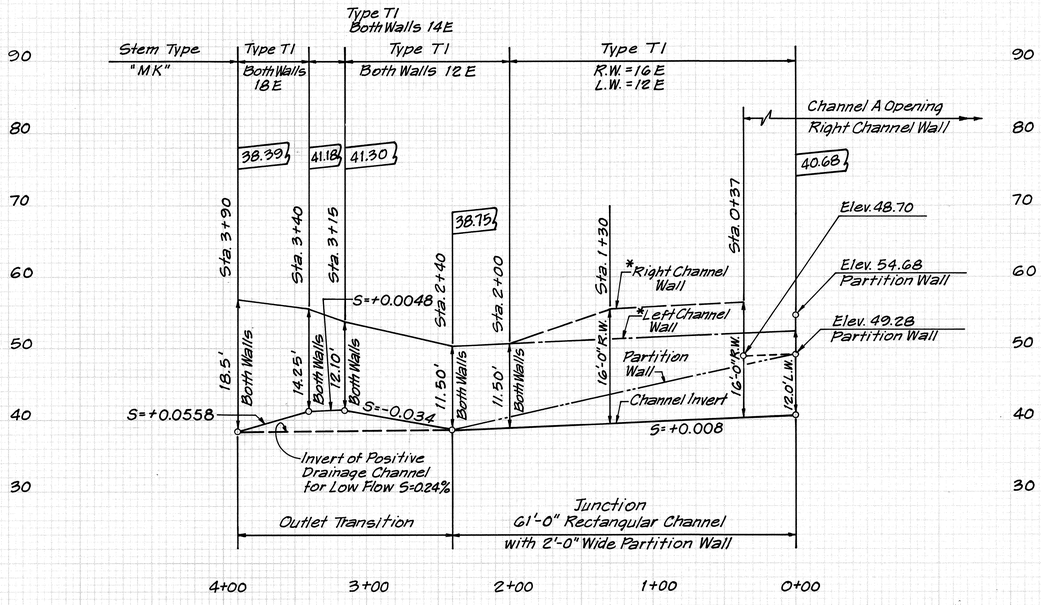

NORTH & SOUTH HALAWA STREAM JUNCTION AND OUTLET TRANSITION

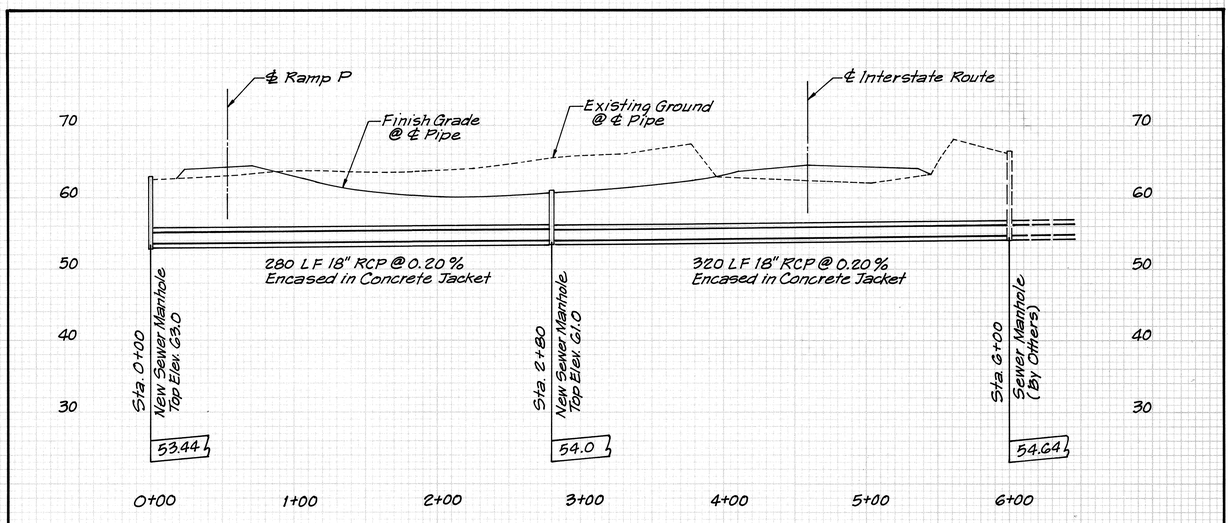

PROFILE - SANITARY SEWER (CITY)

APPROVED

Chief, Division of Sewers — Date

DRAINAGE & UTILITY PROFILES

Scale: Horiz. 1"=50'
Vert. 1"=10'
Slopes in Ft/Ft

51

SHEET NO. 11 D OF 25 SHEETS

PLATE 3 —CROSS SECTION O. P. R. & R. E. STANDARD THE FREDERICK POST CO., CHICAGO

FED. ROAD DIST. NO.	STATE	FED. AID PROJ. NO.	FISCAL YEAR	SHEET NO.	TOTAL SHEETS
HAWAII	HAW.	I-H1-1(90):13	1972	52	202

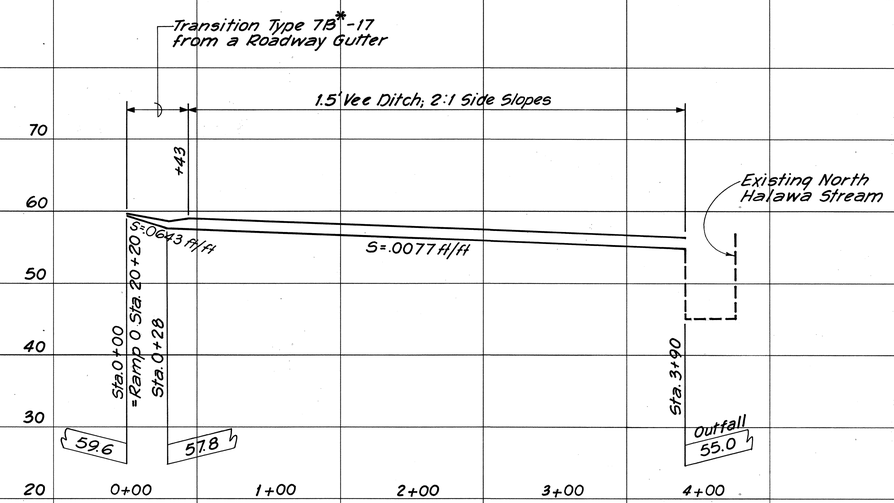

IR & RAMP O DITCH

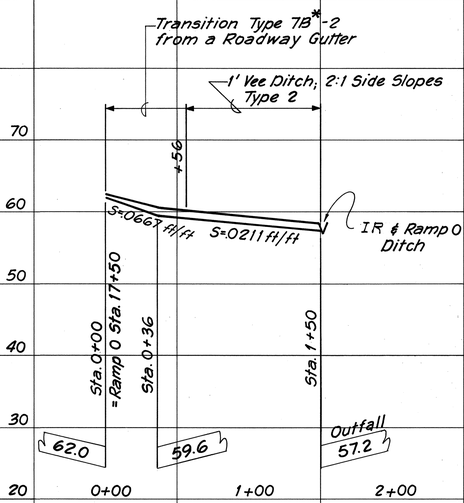

RAMP O DITCH

ORIGINAL PLAN	SURVEY PLOTTED BY	DATE
	DRAWN BY	"
	TRACED BY	"
NOTE BOOK	DESIGNED BY	"
	QUANTITIES BY	"
No.	CHECKED BY	"

J. ANDREW SCHUCHARDT
REGISTERED PROFESSIONAL ENGINEER
No. 2229
HAWAII, U.S.A.

THIS WORK WAS PREPARED BY ME OR UNDER MY SUPERVISION.

J. Andrew Schuchardt

STATE OF HAWAII
DEPARTMENT OF TRANSPORTATION
HIGHWAYS DIVISION

DRAINAGE PROFILES

INTERSTATE ROUTE H-1
PROJECT NO. I-HI-1(90):13

SCALE: Horiz. 1" = 50'
Vert. 1" = 10'

DATE: DEC. 24, 1970

SHEET No. 12D OF 25 SHEETS

52

FED. ROAD DIST. NO.	STATE	FED. AID PROJ. NO.	FISCAL YEAR	SHEET NO.	TOTAL SHEETS
HAWAII	HAW.	I-H1-1(90):13	1972	53	202

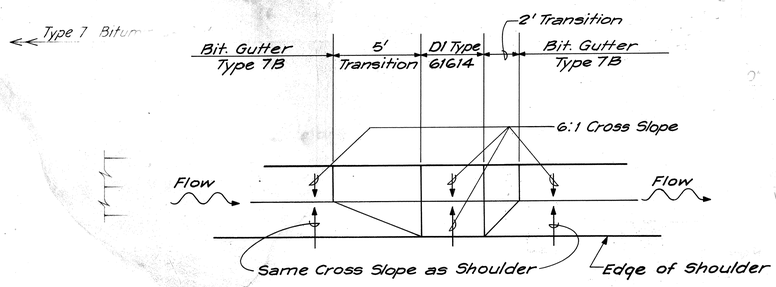

GUTTER TRANSITION DETAIL FOR DI TYPE 61614

Scale: 1" = 4'-0" (Ale 1" = 5'-0")

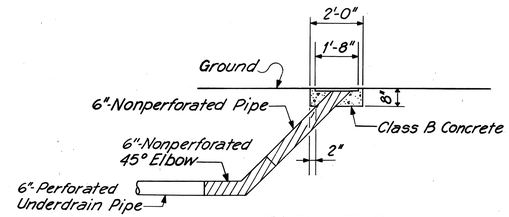

ELEVATION

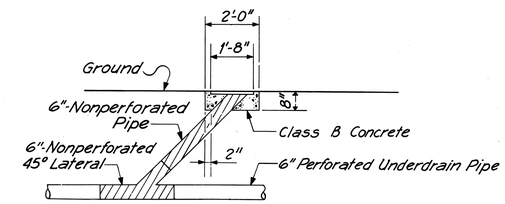

ELEVATION

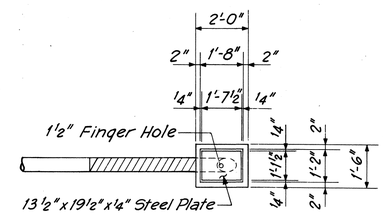

PLAN

UNDERDRAIN CLEANOUT DETAILS

Scale: ⅜" = 1'-0"

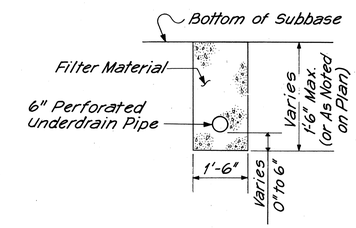

TYPICAL UNDERDRAIN SECTION

Scale: ½" = 1'-0"

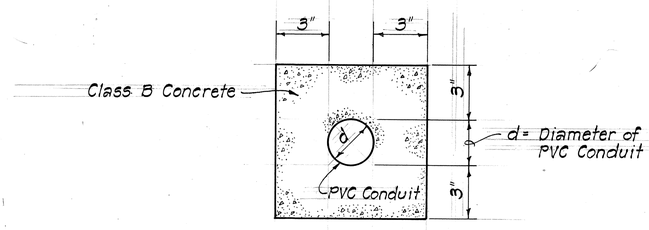

CONDUIT IN CONCRETE JACKET FOR SPRINKLER SYSTEM

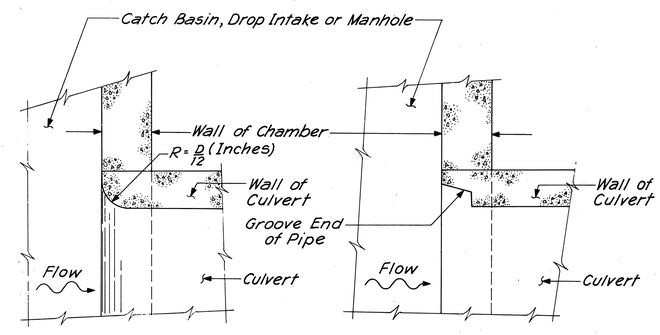

TYPICAL DETAILS FOR CULVERTS EXITING A CATCH BASIN, DROP INTAKE OR MANHOLE

N.T.S.

J. ANDREW SCHUCHARDT
REGISTERED PROFESSIONAL ENGINEER
No. 2229
HAWAII, U.S.A.

THIS WORK WAS PREPARED BY ME OR UNDER MY SUPERVISION.

J. Andrew Schuchardt

STATE OF HAWAII
DEPARTMENT OF TRANSPORTATION
HIGHWAYS DIVISION

DRAINAGE DETAILS

INTERSTATE ROUTE H-1
PROJ. NO. I-H1-1(90):13

SCALE: AS SHOWN DATE:

SHEET No. 13 OF 25 SHEETS

ORIGINAL PLAN	SURVEY PLOTTED BY	DATE
	DRAWN BY	
	TRACED BY	
NOTE BOOK	DESIGNED BY	
	QUANTITIES BY	
No.	CHECKED BY	

53 / 53

PRINTED ON NO. 1000H CLEARPRINT

FED. ROAD DIST. NO.	STATE	FED. AID. PROJECT	FISCAL YEAR	SHEET NO.	TOTAL SHEETS
HAWAII	HAWAII	I-H1-1(90)13	1972	54	202

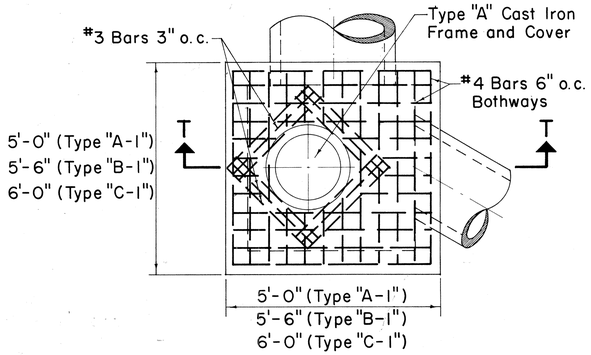

PLAN

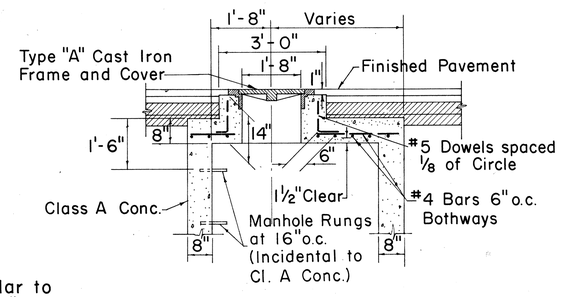

Note:
Bottom detail similar to Type "A", "B", & "C".

SECTION T-T

TYPE "A-1", "B-1", & "C-1"
STORM DRAIN MANHOLE
TOP DETAIL UNDER PAVEMENT

Scale: ½" = 1'-0"

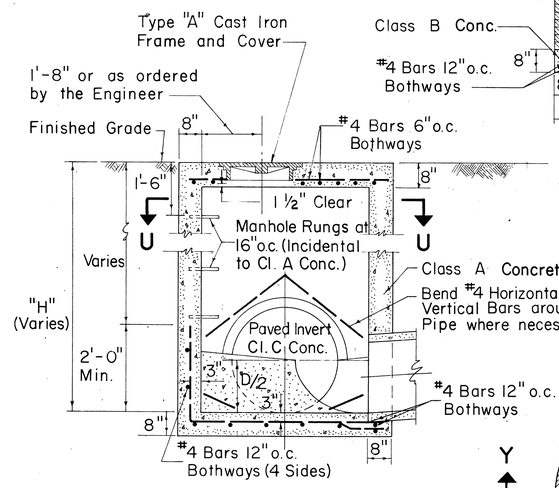

SECTION V-V

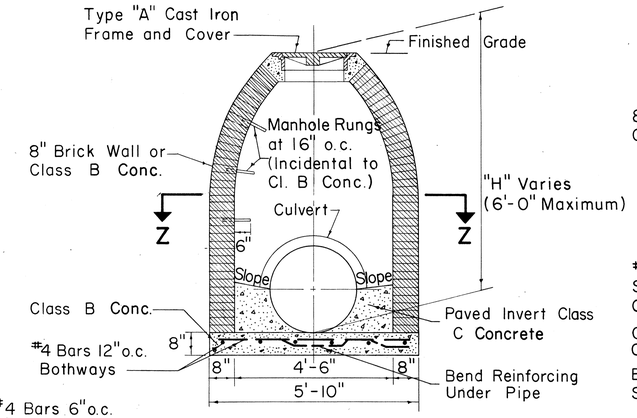

SECTION Y-Y

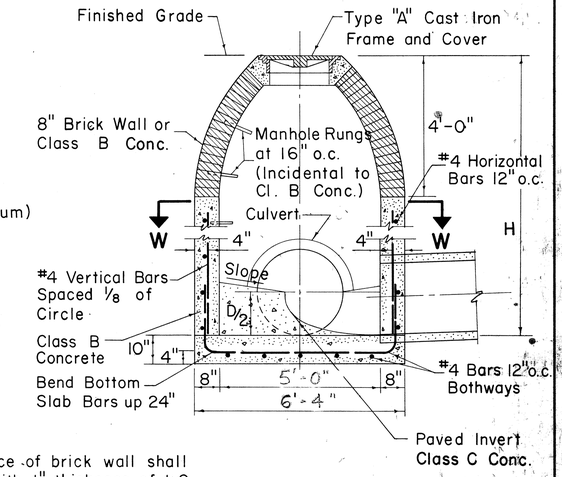

SECTION X-X

NOTE:

1. Exterior surface of brick wall shall be plastered with 1" thickness of 1:2 Cement Mortar.
2. Number, size and direction of culvert at manhole to be as shown on plans.
3. Paved invert not required at drop manholes.
4. All Class C Concrete to be incidental to Class B Concrete.

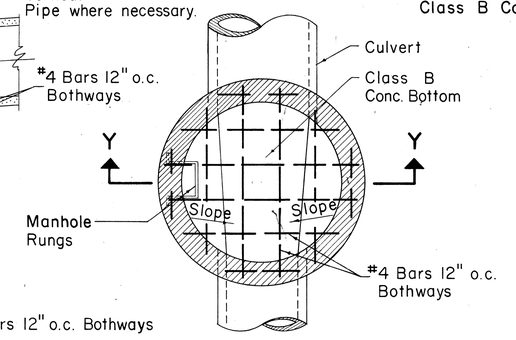

SECTION Z-Z

TYPE "D" STORM DRAIN MANHOLE

Scale: ½" = 1'-0"

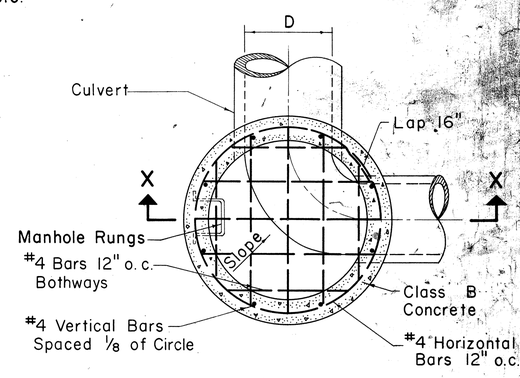

SECTION W-W

TYPE "E" STORM DRAIN MANHOLE

Scale: ½" = 1'-0"

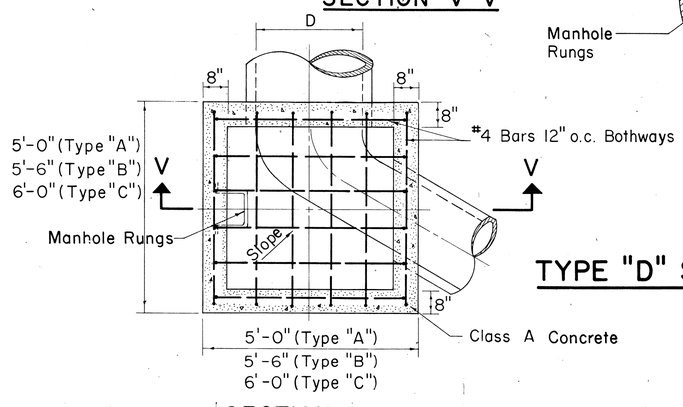

SECTION U-U

TYPE "A", "B", & "C"
S.D.M.H.

Scale: ½" = 1'-0"

GENERAL NOTES

1. Culvert shall enter and leave S.D.M.H. from any position and in the direction indicated by the plans or ordered by the Engineer.
2. Manhole Rungs (16" o.c.) are required when "H" is greater than 4'-6". Only one rung (12" from the bottom) is required if "H" is 4'-6" or less. Type "A" C.I. Frame and Cover and Manhole Rungs may be placed at any location as ordered by the Engineer.

J. ANDREW SCHUCHARDT
REGISTERED PROFESSIONAL ENGINEER
No. 2229
HAWAII, U.S.A.

THIS WORK WAS PREPARED BY ME OR UNDER MY SUPERVISION.

NO.	REVISION	APPROVED BY	DATE

STATE OF HAWAII
DEPARTMENT OF TRANSPORTATION
HIGHWAYS DIVISION

STORM DRAIN MANHOLES

Scales: As Noted
Date: July, 1969

SHEET NO. 14 OF 25 SHEETS DH 5

FED. ROAD DIST. NO.	STATE	FED. AID PROJ. NO.	FISCAL YEAR	SHEET NO.	TOTAL SHEETS
HAWAII	HAW.	I-HI-1(90):13	1972	55	202

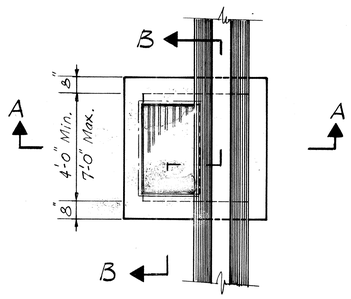

PLAN
3/8" = 1'-0"

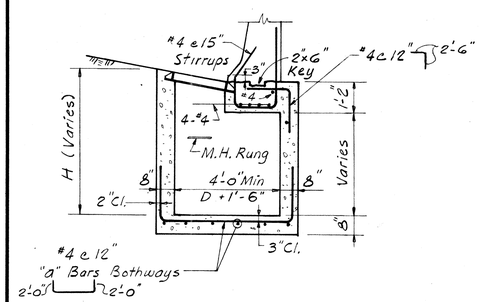

SECTION A-A
3/8" = 1'-0"

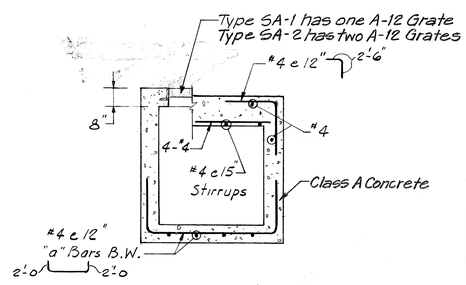

SECTION B-B
3/8" = 1'-0"

CATCH BASIN TYPE SA

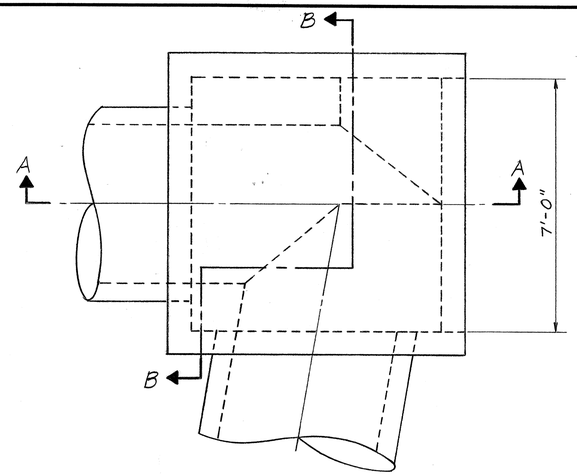

PLAN
1/2" = 1'-0"

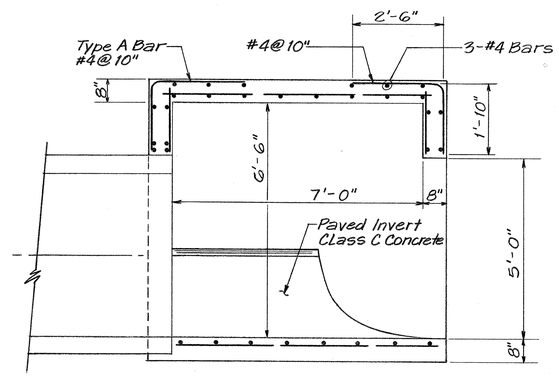

SECTION A-A
1/2" = 1'-0"

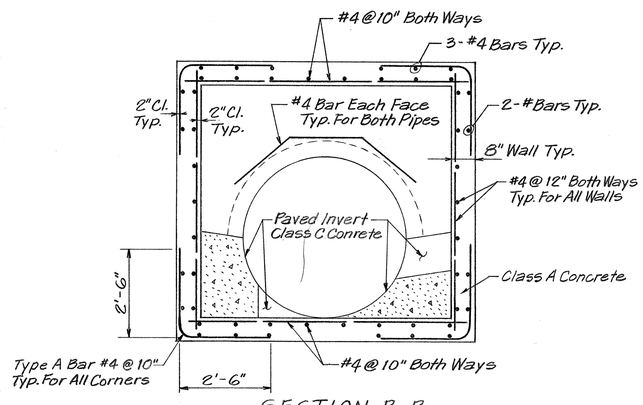

SECTION B-B
1/2" = 1'-0"

SPECIAL INLET #11

GENERAL NOTES

1. The lateral limits for Payment of Structural Excavation for Drainage Structures shall be the vertical surface one foot outside the exterior face of walls.
2. Manhole Rungs (16" o.c.) are required when "H" is greater than 4 feet 6 inches. Only one rung (12 inches from the bottom) is required if "H" is 4 feet 6 inches or less. The Manhole Rungs may be placed at any location as ordered by the Engineer.
3. Provide 2-#4 bent bars each face, top & bottom around culvert pipes.
4. All Class C Concrete to be Incidental to Class A Concrete.

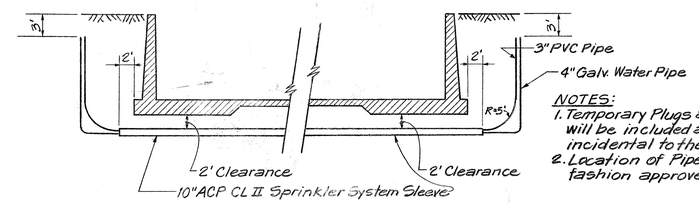

NOTES:
1. Temporary Plugs approved by the Engineer will be included and installed and be incidental to the cost of the pipes.
2. Location of Pipes are to be marked in a fashion approved by the Engineer.

TYPICAL PROFILE FOR SPRINKLER SYSTEM SLEEVE UNDER CHANNELS & DITCHES

NOT TO SCALE

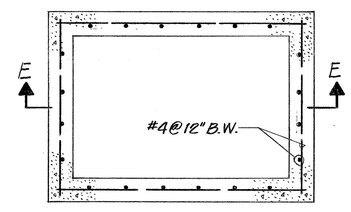

PLAN SECTION
1/2" = 1'-0"

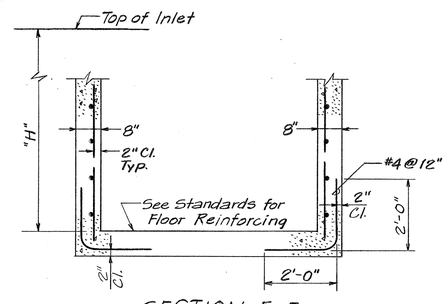

SECTION E-E
1/2" = 1'-0"

TYPICAL WALL REINFORCING FOR CATCH BASIN AND DROP INTAKES WHEN "H" EXCEEDS 6'-0"

THIS WORK WAS PREPARED BY ME OR UNDER MY SUPERVISION

J. ANDREW SCHUCHARDT
REGISTERED PROFESSIONAL ENGINEER
No. 2229
HAWAII, U.S.A.

STATE OF HAWAII
DEPARTMENT OF TRANSPORTATION
HIGHWAYS DIVISION

DRAINAGE DETAILS

INTERSTATE ROUTE H-1
PROJECT No. I-H1-1 (90):13

SCALE: AS SHOWN DATE: DEC. 24, 1970

SHEET No. 150 OF 25 SHEETS

ORIGINAL PLAN	SURVEY PLOTTED BY	DATE
	DRAWN BY	"
	TRACED BY	"
NOTE BOOK	DESIGNED BY	"
	QUANTITIES BY	"
No.	CHECKED BY	"

FED. ROAD DIST. NO.	STATE	FED. AID PROJ. NO.	FISCAL YEAR	SHEET NO.	TOTAL SHEETS
HAWAII	HAW.	I-H1-1(90)13	1972	56	202

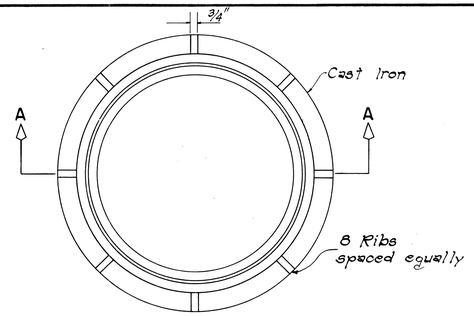

PLAN

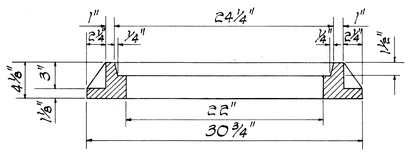

SECTION A-A

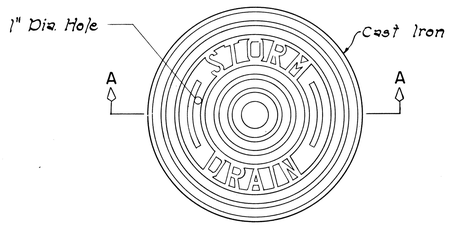

PLAN

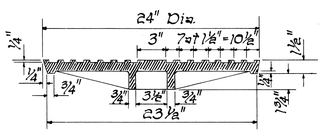

SECTION A-A

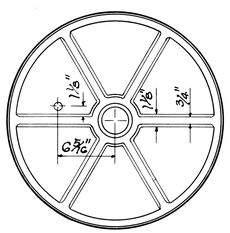

BOTTOM VIEW OF COVER

DETAILS OF TYPE "P"

CAST IRON FRAME AND COVER

SCALE: 1-1/2" = 1'-0"

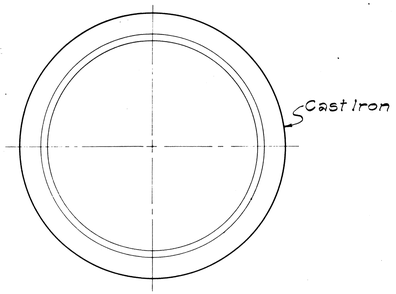

PLAN OF RIM

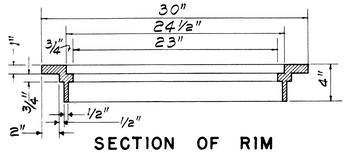

SECTION OF RIM

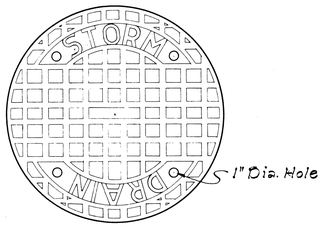

TOP VIEW OF COVER

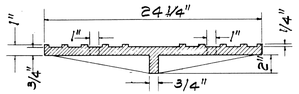

SECTION

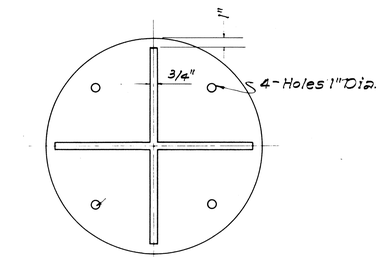

BOTTOM VIEW OF COVER

DETAILS OF TYPE "B"

CAST IRON FRAME AND COVER

SCALE: 1-1/2" = 1'-0"

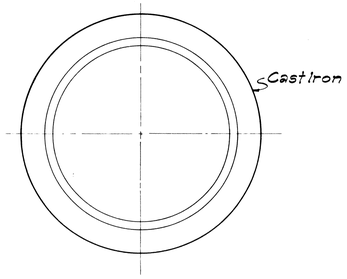

PLAN OF RIM

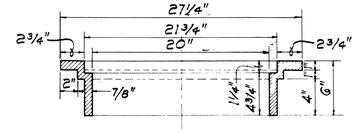

SECTION OF RIM

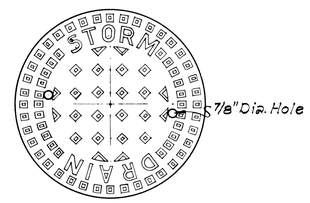

TOP VIEW OF COVER

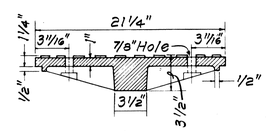

SECTION

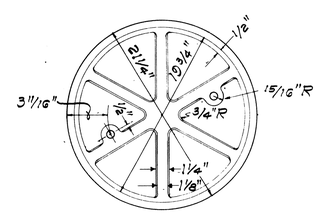

BOTTOM VIEW OF COVER

DETAILS OF TYPE "A"

CAST IRON FRAME AND COVER

SCALE: 1-1/2" = 1'-0"

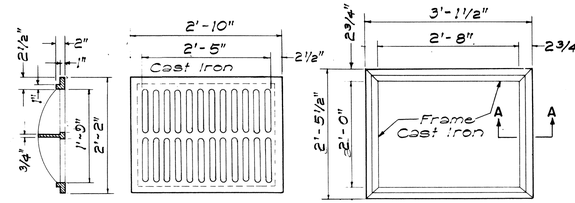

TYPE C C.I. FRAME AND GRATE

SCALE: 3/4" = 1'-0"

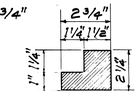

SECTION "A-A"

SCALE 3" = 1'-0"

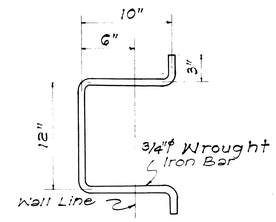

MANHOLE RUNG

SCALE: 1-1/2" = 1'-0"

APPROVAL RECOMMENDED:

S. Takano — HYDRAULIC DESIGN ENGINEER — 12-17-69 DATE

APPROVED:

Philip E. Rodrigues — ASSISTANT CHIEF, ENGINEERING — 12-17-69 DATE

NO.	REVISION	APPROVED BY	DATE
1.	Detail of Type "P" Cast Iron Frame and Cover	H.T.	1-6-71

STATE OF HAWAII
DEPARTMENT OF TRANSPORTATION
HIGHWAYS DIVISION

STANDARD DETAILS

CATCH BASIN AND MANHOLE CASTINGS

Scale: As Noted — Date: July, 1969

SHEET No 16D OF 25 SHEETS DH 6

55 (6)

ORIGINAL PLAN	SURVEY PLOTTED BY	DATE
	DESIGNED BY	"
	TRACED BY	"
NOTE BOOK	TRACED BY J. Calisto	"
No.	QUANTITIES BY	"
	CHECKED BY	"

FED. ROAD DIST. NO.	STATE	FED. AID PROJ. NO.	FISCAL YEAR	SHEET NO.	TOTAL SHEETS
HAWAII	HAW.	I-H1-1(20):13	1972	57	202

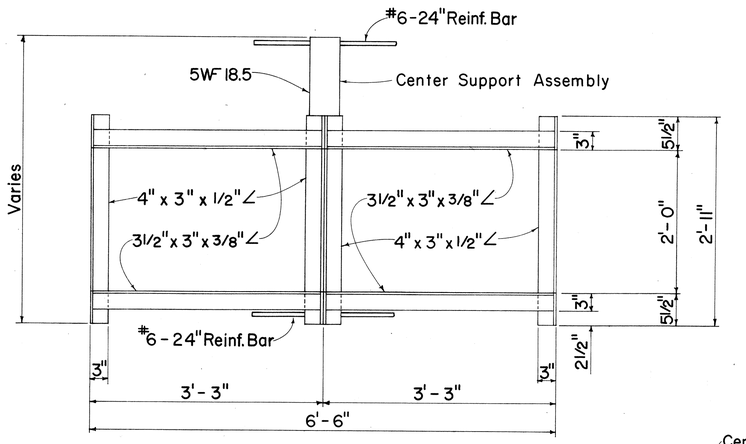

PLAN
(Two or More Grates)

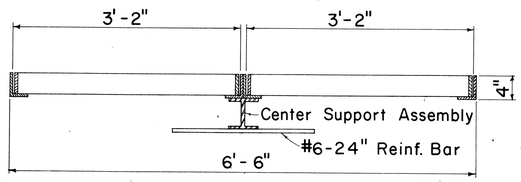

LONGITUDINAL SECTION
(Thru Frame & Grate)

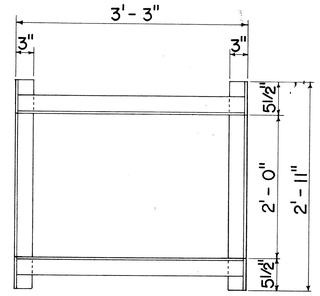

PLAN
(Single Grate)

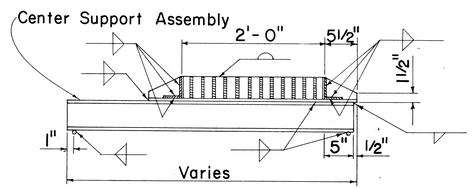

CROSS SECTION
(Thru Frame & Grate)

FRAME DETAILS
Scale: 1" = 1'-0"

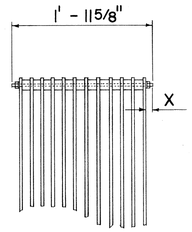

BOLTED END BLOCK
Scale: 1" = 1'-0"

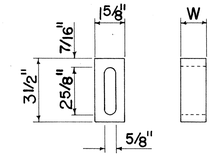

BAR SPACER
Scale: 3" = 1'-0"

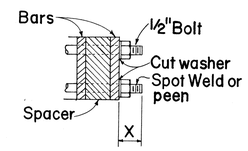

BOLTING DETAIL
Scale: 3" = 1'-0"

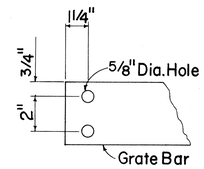

END OF BAR
Scale: 3" = 1'-0"

ALTERNATIVE BOLTED GRATE

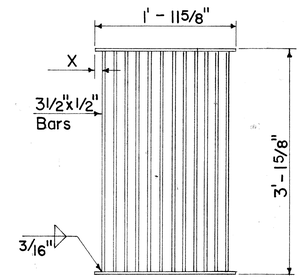

PLAN

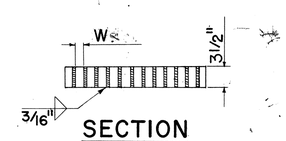

SECTION

ALTERNATIVE WELDED GRATE
Scale: 1" = 1'-0"

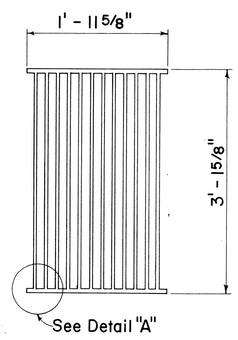

PLAN
Scale: 1" = 1'-0"

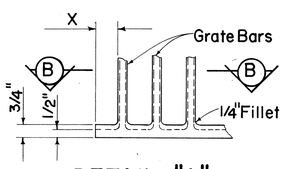

DETAIL "A"
Scale: 3" = 1'-0"

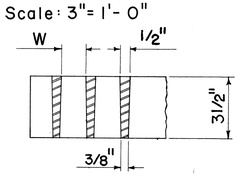

SECTION "B-B"
Scale: 3" = 1'-0"

ALTERNATIVE CAST MALLEABLE IRON OR CAST STEEL GRATE

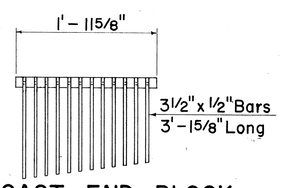

CAST END BLOCK
Scale: 1" = 1'-0"

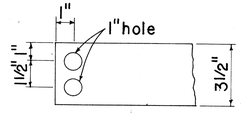

END OF BAR
Scale: 3" = 1'-0"

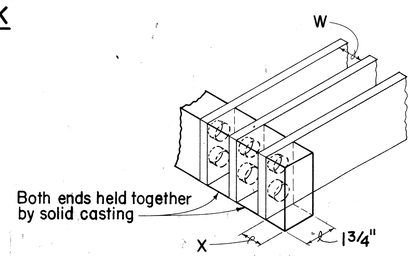

ALTERNATIVE CAST MALLEABLE IRON OR CAST STEEL END BLOCK GRATE

GENERAL NOTES

1. Contractor has the option of using cast malleable iron, cast steel, welded, bolted, cast malleable iron end block or cast steel end block grate.
2. Grates and Frames shall be hot dip galvanized after fabrication, see specifications.
3. All welds 3/8" unless otherwise noted.
4. Center support assembly shall be used when two or more grates are specified. Incidental to Types A-9 or A-12 Frame and Grates.
5. Refer to "Grate Bar Spacing Table" for Types A-9 and A-12 Grate dimensions.
6. The various materials shall conform to the specifications of ASTM as listed in the following tabulation and the Std. Specifications.

Material	ASTM Designation
Structural Steel	A283, Grade D
Cast Steel	A27, Grade 65-35
Malleable Iron Casting	A47, Gr. No. 35018

GRATE BAR SPACING TABLE

TYPE	NO. BARS	CLEAR BAR SPACING - W	X
A-9	9	2"	1 9/16"
A-12	12	1 3/8"	1 1/4"

NOTE:

1. Type A-9 – Use in locations off the roadbed on all types of highways.
2. Type A-12 – Use within the roadbed on all types of highways.

APPROVAL RECOMMENDED:
T. Takamo — 12-17-69
HYDRAULIC DESIGN ENGINEER — DATE

APPROVED:
[illegible] — 12-17-69
ASSISTANT CHIEF, ENGINEERING — DATE

NO.	REVISION	APPROVED BY	DATE

STATE OF HAWAII
DEPARTMENT OF TRANSPORTATION
HIGHWAYS DIVISION

STANDARD DETAILS

TYPE A-9 AND A-12 FRAMES AND GRATES

Scales: As Noted — Date: Aug. 1968

SHEET No. 17D OF 25 SHEETS — DH 7

ORIGINAL PLAN	SURVEY PLOTTED BY	DATE
	DRAWN BY F.C.L.M.	7/68
	TRACED BY F.C.A.T.	8/68
	DESIGNED BY H.K.M.	7/68
NOTE BOOK	QUANTITIES BY	
No.	CHECKED BY H.K.M.	8/68

57

FED. ROAD DIST. NO.	STATE	FED. AID PROJ. NO.	FISCAL YEAR	SHEET NO.	TOTAL SHEETS
HAWAII	HAW.	I-H1-1(90)13	1972	58	202

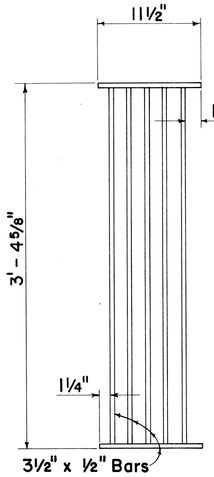

PLAN
Scale: 1½" = 1'-0"

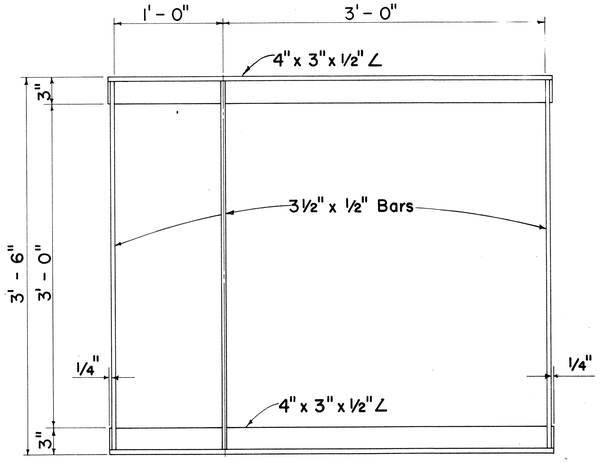

PLAN
Scale: 1½" = 1'-0"

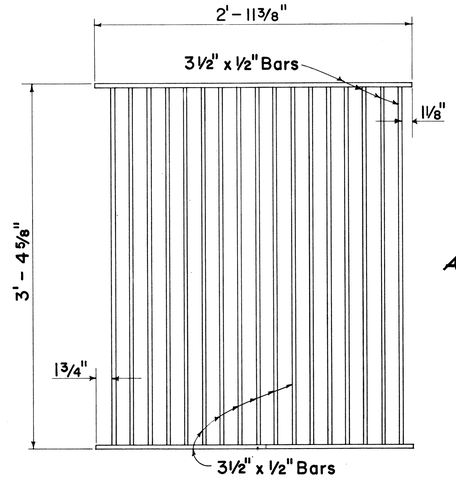

PLAN
Scale: 1½" = 1'-0"

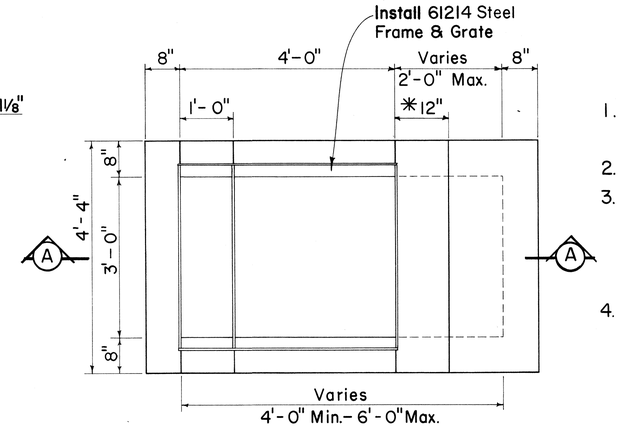

PLAN

GENERAL NOTES

1. Grates and Frames shall be hot dip galvanized after fabrication, see specifications.
2. All welds ⅜" unless otherwise noted.
3. The Frame & Grate materials shall conform to the specifications of ASTM Designation Structural Steel A283, Grade D and the Standard Specifications.
4. Culvert shall leave Drop Intake from any position and any direction indicated by plans or ordered by the Engineer. Culverts may both enter and leave Drop Intake so that Drop Intake will act as manhole.
5. Manhole Rungs (16" o.c.) are required when "H" is greater than 4 feet 6 inches. Only one rung (12 inches from the bottom) is required if "H" is 4 feet 6 inches or less. The Manhole Rungs may be placed at any location as ordered by the Engineer.

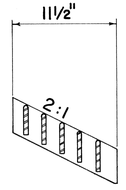

SECTION
Scale: 1½" = 1'-0"

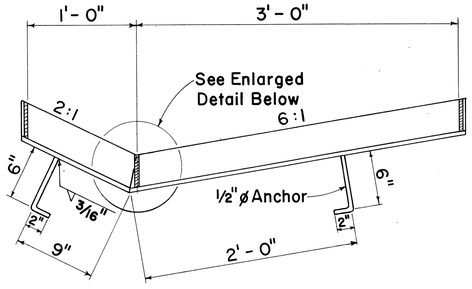

SECTION
Scale: 1½" = 1'-0"

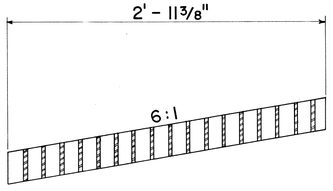

SECTION
Scale: 1½" = 1'-0"

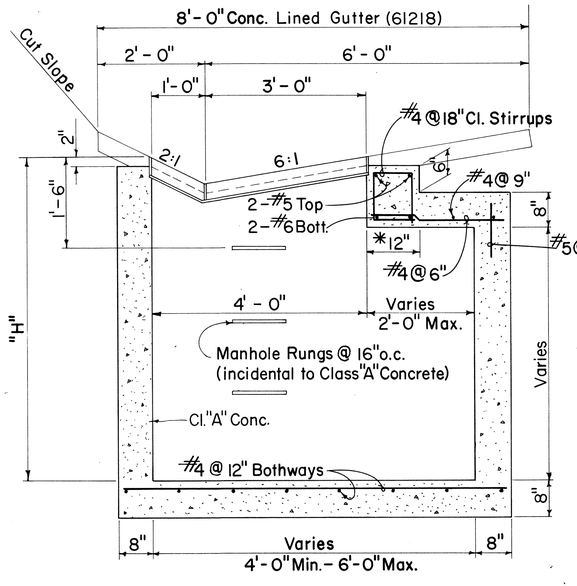

SECTION A - A

DETAIL OF 61214 DROP INTAKE

Scale: ¾" = 1'-0"

*For Minimum size box of 4'-0" only, use 8" and eliminate reinforcing steel shown in top portion.

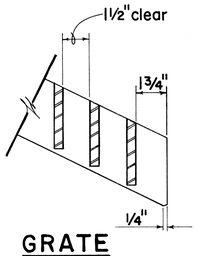

GRATE
Scale: 3" = 1'-0"

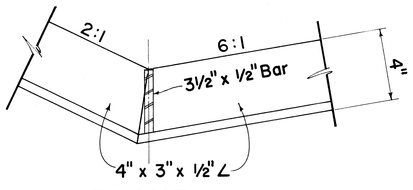

FRAME
Scale: 3" = 1'-0"

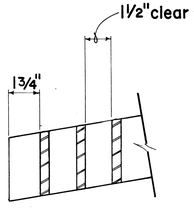

GRATE
Scale: 3" = 1'-0"

DETAILS OF TYPE 61214 STEEL FRAME AND GRATES

NO.	REVISION	APPROVED BY	DATE

APPROVAL RECOMMENDED:
G. Yakano — 12-17-69
HYDRAULIC DESIGN ENGINEER — DATE

APPROVED:
[signature] — 12-17-69
ASSISTANT CHIEF, ENGINEERING — DATE

STATE OF HAWAII
DEPARTMENT OF TRANSPORTATION
HIGHWAYS DIVISION
STANDARD DETAILS
TYPE 61214
GRATED DROP INTAKE

Scales: As Noted — Date: July 1969

SHEET No. 18D OF 25 SHEETS — DH 9

58

ORIGINAL PLAN	SURVEY PLOTTED BY	DATE
	DRAWN BY	"
	TRACED BY	"
NOTE BOOK	DESIGNED BY	"
	QUANTITIES BY	"
No.	CHECKED BY	"

FED. ROAD DIST. NO.	STATE	FED. AID PROJ. NO.	FISCAL YEAR	SHEET NO.	TOTAL SHEETS
HAWAII	HAW.	I-HI-1(90)-13	1972	59	202

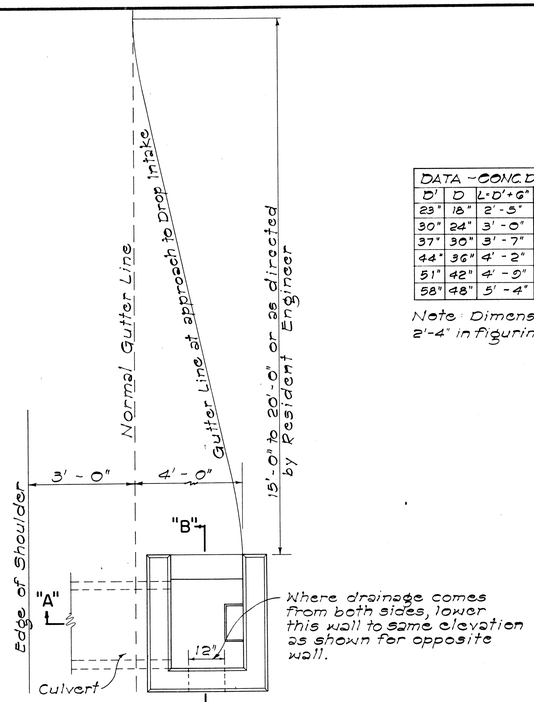

PLAN

DATA - CONC. DROP INTAKE				Where Variable Equals
D'	D	L-D'+6"	S	Cu. Yds.
23"	18"	2'-3"	8"	1.41
30"	24"	3'-0"	8"	1.72
37"	30"	3'-7"	9"	2.32
44"	36"	4'-2"	9"	2.73
51"	42"	4'-9"	10"	3.54
58"	48"	5'-4"	10"	4.01

Note: Dimension "X" is assumed as 2'-4" in figuring the above quantities.

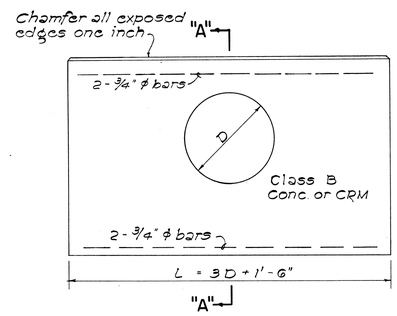

ELEVATION

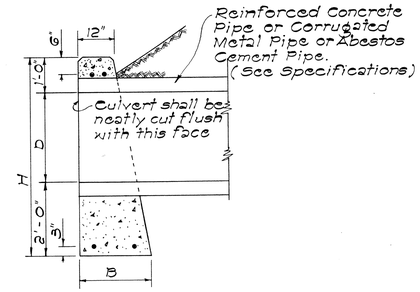

SECTION "A-A"

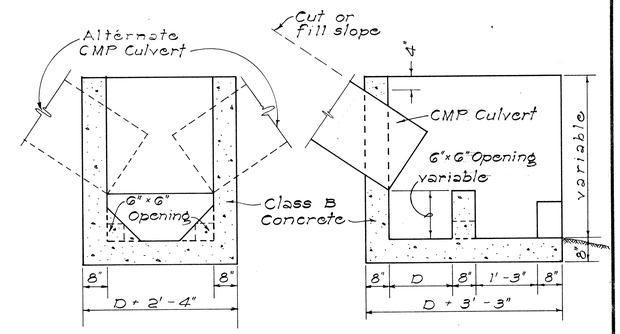

SECTION "C-C" SECTION "D-D"

DATA FOR CONC. HEADWALL				Cl. B CONC FOR R.C.P.	Cl. B CONC FOR C.M.P.	Steel For One Headwall			
D	B	L	H	Cu. Yd.	Cu. Yd.	No. of Bars	Size	Length	Lbs.
18"	1'-6"	6'-0"	4'-6"	1.12	1.17	4	3/4" ϕ	5'-6"	33
24"	1'-6"	7'-6"	5'-0"	1.52	1.60	4	3/4" ϕ	7'-0"	42
30"	2'-0"	9'-0"	5'-6"	2.36	2.49	4	3/4" ϕ	8'-6"	51
36"	2'-0"	10'-6"	6'-0"	2.94	3.13	4	3/4" ϕ	10'-0"	60
42"	2'-6"	12'-0"	6'-6"	4.10	4.47	4	3/4" ϕ	11'-6"	69
48"	2'-6"	13'-6"	7'-0"	5.01	5.36	4	3/4" ϕ	13'-0"	78

DATA - MASONRY HEADWALL				CRM FOR R.C.P.	CRM FOR C.M.P.
D	B	L	H	Cu. Yd.	Cu. Yd.
18"	1'-9"	6'-0"	4'-6"	1.24	1.29
24"	2'-0"	7'-6"	5'-0"	1.83	1.92
30"	2'-3"	9'-0"	5'-6"	2.56	2.70
36"	2'-6"	10'-6"	6'-0"	3.45	3.66

DETAIL OF HEADWALL

Scale: 1/2" = 1'-0"

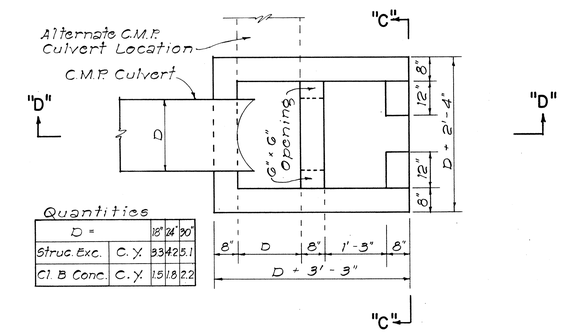

Quantities

D =		18"	24"	30"
Struc. Exc.	C.Y.	33	42	51
Cl. B Conc.	C.Y.	1.5	1.8	2.2

PLAN

DETAILS OF CONC. DROP BOX AT OUTLET OF CULVERT PIPE

NOT TO SCALE

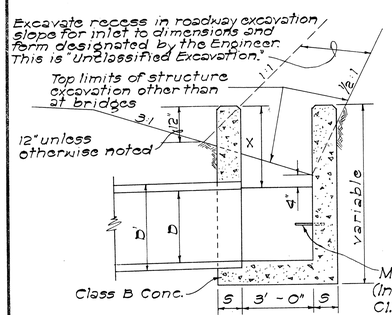

SECTION "A-A"

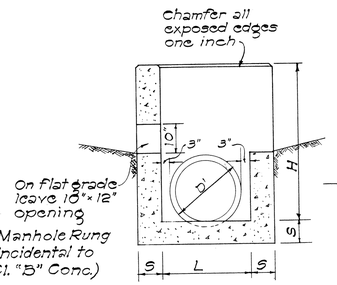

SECTION "B-B"

DETAIL OF CONCRETE DROP INTAKE

Scale: 1/2" = 1'-0"

GENERAL NOTES

1. Culvert shall enter and leave Drop Intake from any position and in the direction indicated by the plans or ordered by the Engineer.
2. D' shall be the maximum outside dimension of the culvert at the Drop Intake wall.
3. Manhole Rungs (16" o.c.) are required when "H" is greater than 4 feet 6 inches. Only one rung (12 inches from the bottom) is required if "H" is 4 feet 6 inches or less. Manhole Rungs maybe placed at any location as ordered by the Engineer.

Note: When subgrade is below top of jacket, it shall be fully compacted to this line and then re-excavated (struc. exc.) to proper subgrade. This surface shall be rolled again.

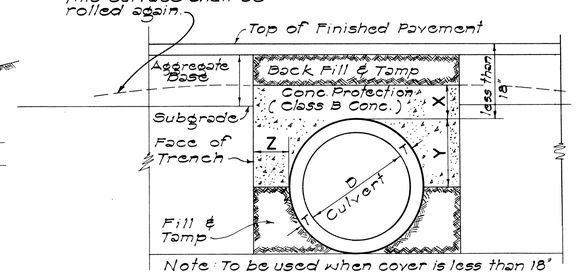

DATA FOR CONCRETE PROTECTION OVER CULVERTS		
X	Y	Z
6" for 18" D	$\frac{D}{2} + T$	Z must be from pipe to face of trench
7" for 24" D		Minimum = X
8" for 30" D		Maximum pay quantity will be Z = 12"
9" for 36" D		
10" for 42" D		
11" for 48" D		
12 for 54" D		

SECT. OF CULVERT WITH CONC. PROTECTION

Scale: 1" = 1'-0"

APPROVAL RECOMMENDED:

G. Yakano — 12-17-69

HYDRAULIC DESIGN ENGINEER — DATE

APPROVED:

Stanley S. Sakai — 12-17-69

ASSISTANT CHIEF, ENGINEERING — DATE

NO.	REVISION	APPROVED BY	DATE

STATE OF HAWAII
DEPARTMENT OF TRANSPORTATION
HIGHWAYS DIVISION

STANDARD DETAILS

DROP INTAKE, HEADWALL & CONCRETE PROTECTION

Scale: As Noted — Date: Aug. 1967

SHEET No. 19D OF 25 SHEETS — DH 10

59

ORIGINAL PLAN	SURVEY PLOTTED BY	DATE
	DRAWN BY	
	TRACED BY	
NOTE BOOK	DESIGNED BY	
No.	QUANTITIES BY	
	CHECKED BY	

FED. ROAD DIST. NO.	STATE	FED. AID PROJ. NO.	FISCAL YEAR	SHEET NO.	TOTAL SHEETS
HAWAII	HAW.	I-H1-1(90)13	1972	60	202

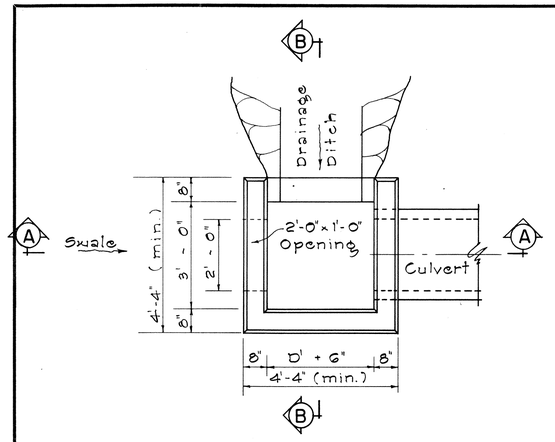

PLAN

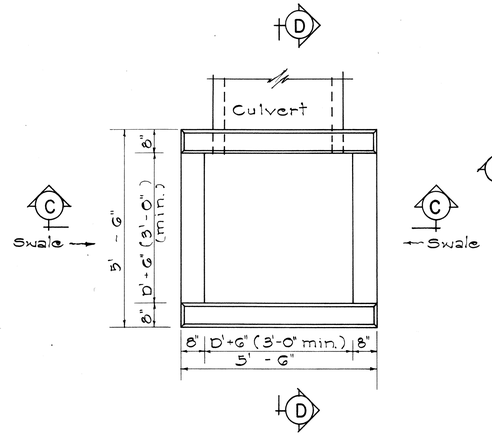

PLAN

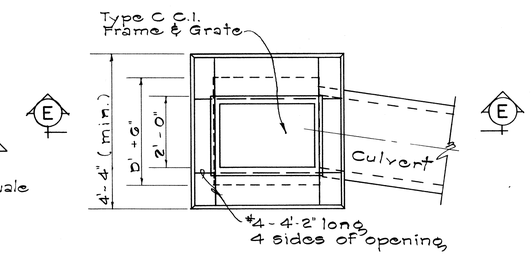

PLAN

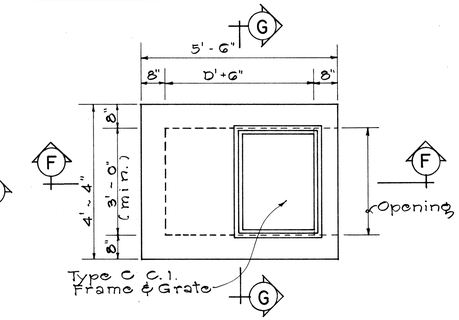

PLAN

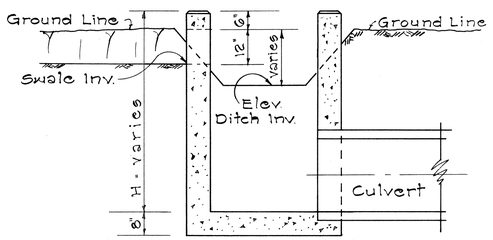

SECTION "A-A"

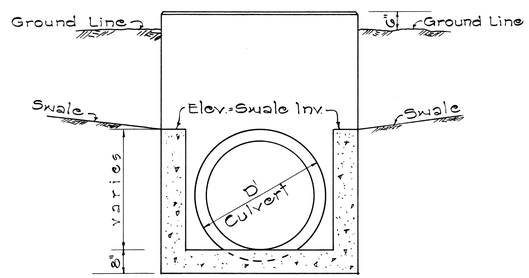

SECTION "C-C"

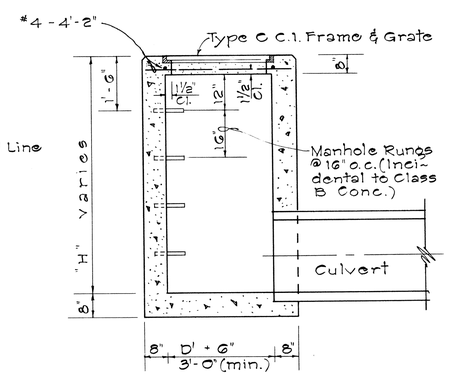

SECTION "E-E"

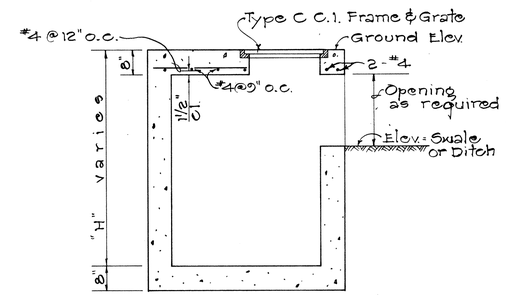

SECTION "F-F"

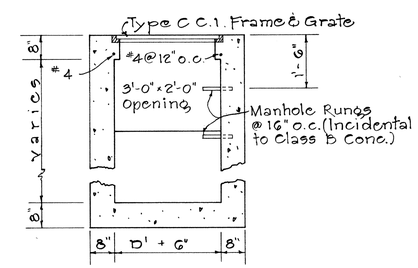

SECTION "G-G"

TYPE "C" GRATED CONCRETE DROP INTAKE

Scale: 1/2" = 1'-0"

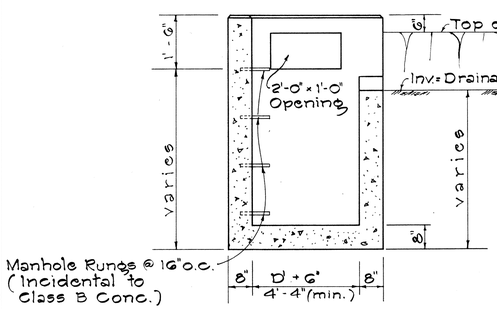

SECTION "B-B"

TYPE "A" CONCRETE DROP INTAKE

Scale: 1/2" = 1'-0"

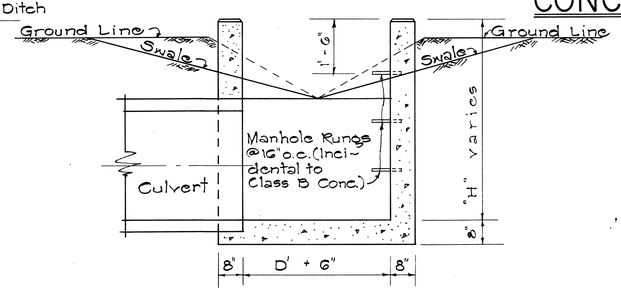

SECTION "D-D"

TYPE "B" CONCRETE DROP INTAKE

Scale: 1/2" = 1'-0"

TYPE "D" GRATED CONCRETE DROP INTAKE

Scale: 1/2" = 1'-0"

GENERAL NOTES

1. All concrete shall be Class "B" unless otherwise noted.
2. Exposed edges of all drainage structures shall be chamfered one inch.
3. Culvert shall enter and leave Drop Intake from any position and in the direction indicated by the plans or ordered by the Engineer.
4. Manhole Rungs (16" o.c.) are req'd. when "H" is greater than 4'-6". Only one rung (12 inches from the bottom) is required if "H" is 4'-6" or less. Manhole Rungs may be placed at any location as ordered by the Engineer.

APPROVAL RECOMMENDED: G. Takamo — HYDRAULIC DESIGN ENGINEER — DATE 12-17-69

APPROVED: [signature] — ASSISTANT CHIEF, ENGINEERING — DATE 12-17-69

NO.	REVISION	APPROVED BY	DATE

STATE OF HAWAII
DEPARTMENT OF TRANSPORTATION
HIGHWAYS DIVISION
STANDARD DETAILS
TYPE "A", "B", "C", AND "D" CONCRETE DROP INTAKE

Scale: As Noted — Date: July, 1969

SHEET No. 20D OF 25 SHEETS DH19

ORIGINAL PLAN	SURVEY PLOTTED BY	DATE
	SURVEY BY	
	TRACED BY	
NOTE BOOK	DESIGNED BY	
	QUANTITIES BY	
No.	CHECKED BY	

(G 11)

FED. ROAD DIST. NO.	STATE	FED. AID PROJ. NO.	FISCAL YEAR	SHEET NO.	TOTAL SHEETS
HAWAII	HAWAII	I-HI-1(90):13	1972	61	202

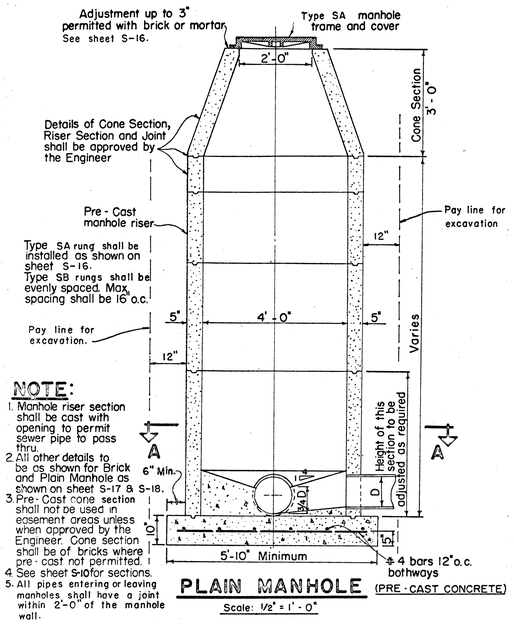

NOTE:

1. Manhole riser section shall be cast with opening to permit sewer pipe to pass thru.
2. All other details to be as shown for Brick and Plain Manhole as shown on sheet S-17 & S-18.
3. Pre-Cast cone section shall not be used in easement areas unless when approved by the Engineer. Cone section shall be of bricks where pre-cast not permitted.
4. See sheet S-10 for sections.
5. All pipes entering or leaving manholes shall have a joint within 2'-0" of the manhole wall.

PLAIN MANHOLE (PRE-CAST CONCRETE)

Scale: 1/2" = 1'-0"

Where sewer runs straight thru the manhole, the Contractor may lay pipe thru manhole with the manhole invert and base poured together. After concrete has hardened, the upper portion of pipe within the manhole shall be carefully broken out. All unevenness shall be patched with mortar.

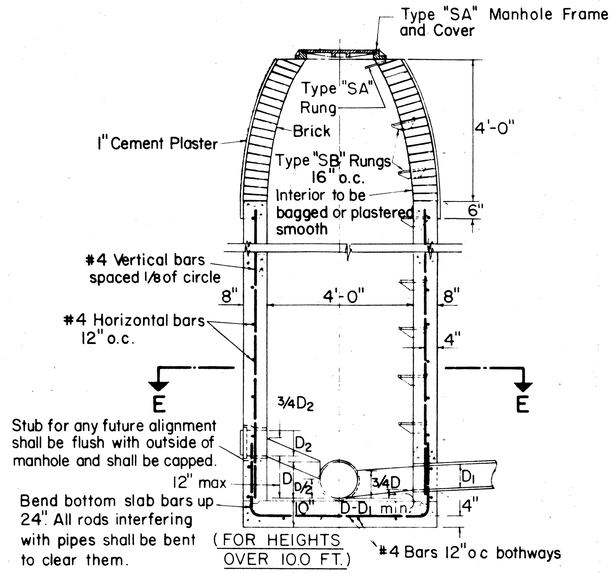

PLAIN MANHOLE

Scale 1/2" = 1'-0"

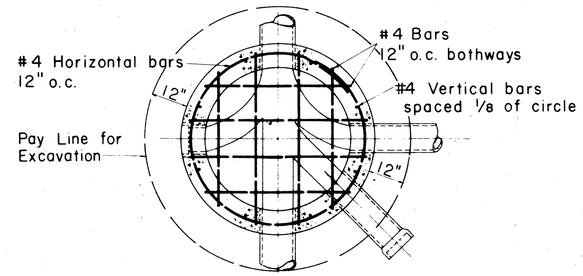

SECTION E-E

Scale: 1/2" = 1'-0"

NOTE:

Reinforced concrete manhole walls (See detail of plain manhole) shall be used for portions below the water table.

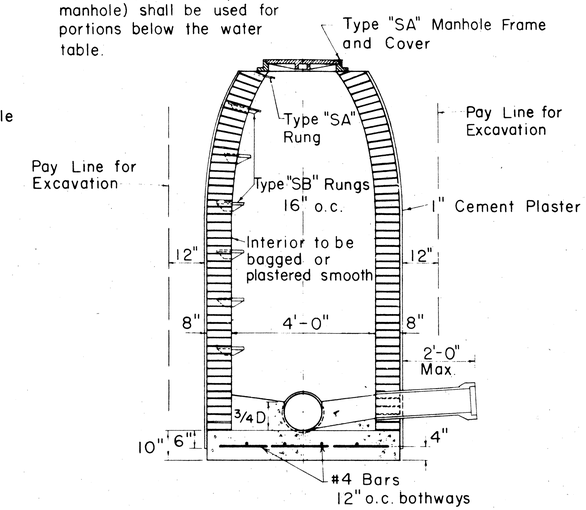

(MAXIMUM HEIGHT - 10.0 FEET)

BRICK MANHOLE

Scale: 1/2" = 1'-0"

Payment for excavation for manholes shall be made under the item "Structure Excavation other than at Bridges" and shall be measured to one foot outside of walls from original ground elevation to authorized bottom elevation. Payment for manhole walls (brick, concrete, or cast-in-place concrete) shall include brick, mortar, concrete, reinforcing steel, cast iron steps, galvanized wrought iron rungs, and plastering, and be paid for under the item "Walls for Sewer Manhole." Payment for manhole bases shall be made under the items "Class B Concrete other than in Bridges" and "Reinforcing Steel other than in Bridges."

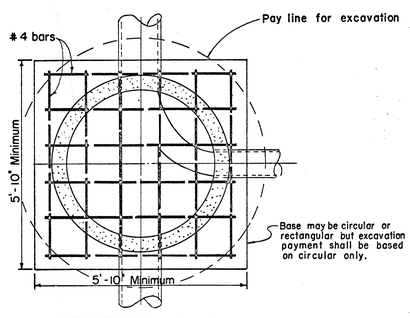

SECTION A-A

Scale: 1/2" = 1'-0"

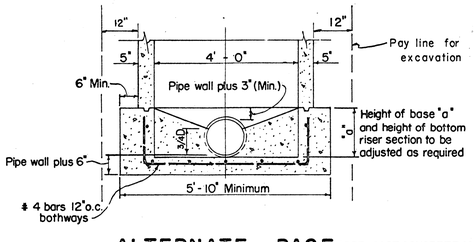

ALTERNATE BASE (PRE-CAST CONCRETE M.H.)

Scale: 1/2" = 1'-0"

NOTE

1. Manhole rungs shall not be aligned above any flow line except in drop manhole.
2. No rungs shall be installed in manholes less than 3' high.
3. When not otherwise noted, manhole stubs shall be sloped as follows:

Pipe Size	Rise Per Foot
6"	1/8"
8"	3/32"
10"	1/16"
12"	1/16"

4. All reinforcing rods interfering with pipes shall be bent to clear them.
5. Bar lap to be 40 diameters in length.
6. All class C concrete to be incidental to class B concrete.
7. Manhole wall to be of reinforced concrete to height 1' above normal ground water table.
8. All pipes entering or leaving manholes shall have a joint within 2'-0" of the manhole wall.

APPROVED:

Chief, Division of Sewers 1/4/71 DATE

THIS WORK WAS PREPARED BY ME OR UNDER MY SUPERVISION.

J. Andrew Schuchardt

J. ANDREW SCHUCHARDT REGISTERED PROFESSIONAL ENGINEER No. 2229 HAWAII, U.S.A.

STATE OF HAWAII
DEPARTMENT OF TRANSPORTATION
HIGHWAYS DIVISION
DIVISION OF SEWERS
CITY & COUNTY OF HONOLULU

SEWERS: PRE-CAST AND BRICK MANHOLE DETAILS

INTERSTATE ROUTE H-1
PROJECT NO I-HI-1(90):13

Scales: As Noted Date: DEC. 24, 1970

SHEET NO. 210 OF 25 SHEETS

61

FED. ROAD DIST. NO.	STATE	FED. AID PROJ. NO.	FISCAL YEAR	SHEET NO	TOTAL SHEETS
HAWAII	HAWAII	I-H1-1(90):13	1972	62	202

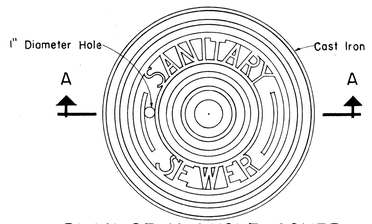

PLAN OF MANHOLE COVER

Scale: 1 1/2" = 1'-0"

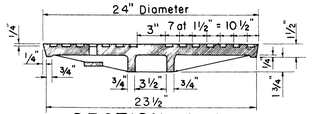

SECTION A-A

Scale: 1 1/2" = 1'-0"

NOTE:
This cover is used with the "SA" or "SD" frame

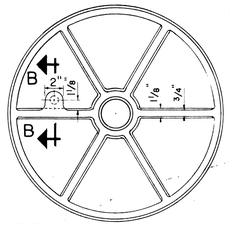

BOTTOM VIEW OF COVER

Scale: 1 1/2" = 1'-0"

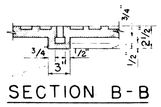

SECTION B-B

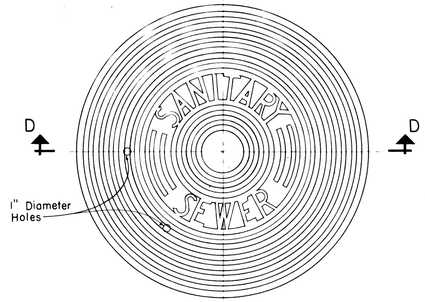

PLAN

SPECIAL MANHOLE COVER

Scale: 1 1/2" = 1'-0"

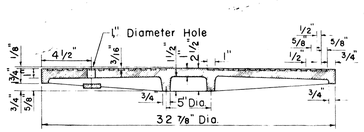

SECTION D-D

Scale: 1 1/2" = 1' 0"

Approx Weight 260 Pounds

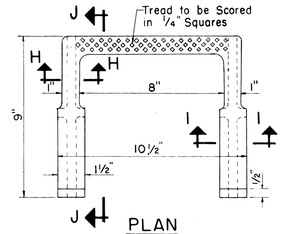

PLAN

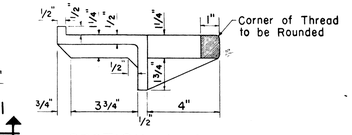

SECTION J-J

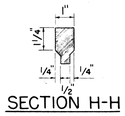

SECTION H-H

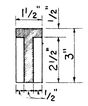

SECTION I-I

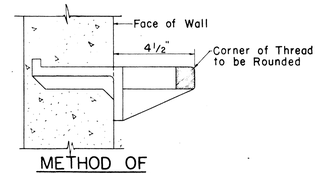

METHOD OF INSTALLATION

TYPE "SB" MANHOLE RUNGS (CAST IRON)

Scale: 3" = 1'-0"

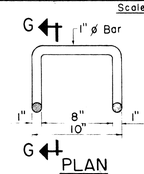

PLAN

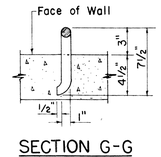

SECTION G-G

TYPE "SA" MANHOLE RUNGS (WROUGHT IRON)

Scale 1 1/2 = 1'-0"

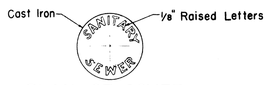

PLAN OF COVER

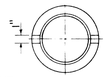

BOTTOM OF COVER

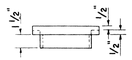

ELEVATION

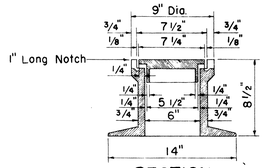

SECTION

DROP MANHOLE CHIMNEY CASTINGS

Scale: 1 1/2" = 1'-0"

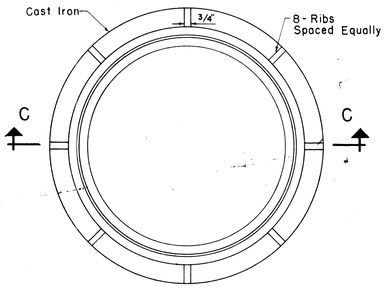

PLAN OF MANHOLE FRAME

Scale: 1 1/2" = 1'-0"

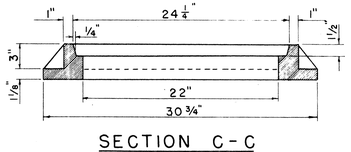

SECTION C-C

Scale: 1 1/2" = 1'-0"

TYPE "SA" SEWER MANHOLE FRAME AND COVER

Scale: 1 1/2" = 1'-0"

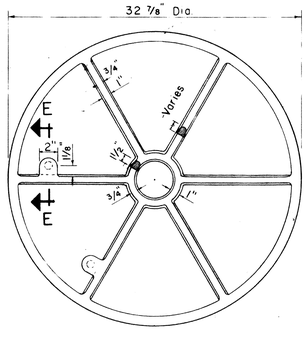

BOTTOM VIEW OF COVER

Scale: 1 1/2" = 1'-0"

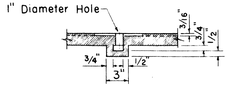

SECTION E-E

Scale: 1 1/2" = 1'-0"

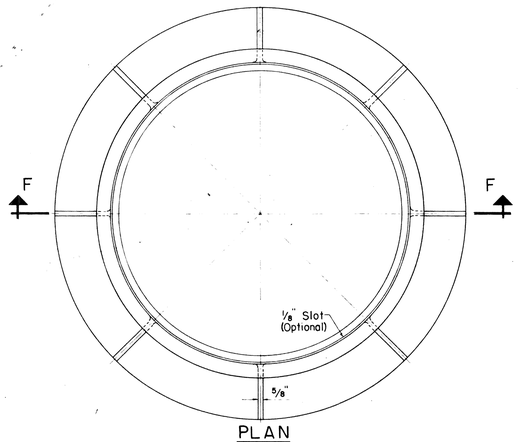

PLAN

SPECIAL MANHOLE FRAME

Scale: 1 1/2" = 1'-0"

Approx Weight 437 Pounds

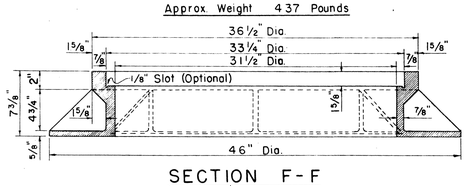

SECTION F-F

Scale: 1 1/2" = 1'-0"

TYPE "SB" SEWER MANHOLE FRAME AND COVER

Scale: 1 1/2" = 1'-0"

APPROVED:

for CHIEF, DIVISION OF SEWERS — DATE

STATE OF HAWAII
DEPARTMENT OF TRANSPORTATION
HIGHWAYS DIVISION
DIVISION OF SEWERS
CITY & COUNTY OF HONOLULU

STANDARD DETAILS

SEWERS - MANHOLE RUNGS, CHIMNEY CASTINGS AND FRAME AND COVER DETAILS

Scales: As Noted — Date: DEC. 24, 1970

SHEET NO. 22D OF 25 SHEETS.

ORIGINAL PLAN		
	SURVEY PLOTTED BY	DATE
	DRAWN BY	"
	TRACED BY	"
NOTE BOOK	DESIGNED BY	"
No.	QUANTITIES BY	"
	CHECKED BY	"

62

EPD 125 IMPERIAL TRACING CLOTH 10-68

FED. ROAD DIST. NO	STATE	FED. AID PROJ. NO	FISCAL YEAR	SHEET NO	TOTAL SHEETS
HAWAII	HAWAII	I-H1-(90)-13	1972	63	202

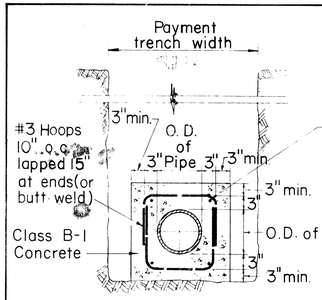

DETAIL OF CONCRETE JACKET

Scale: 3/4" = 1'-0"

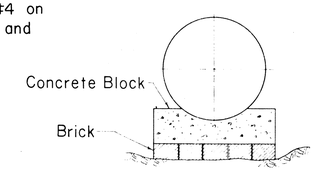

METHOD OF USING BRICKS UNDER CONCRETE BLOCKS

Not To Scale

Contractor shall set Concrete Blocks on undisturbed ground. Where ground is too low, the contractor shall not heap up dirt under the Concrete Block but use Concrete Bricks to take up the deficiency, scraping away beneath Concrete Block to give sufficient room for Brick.

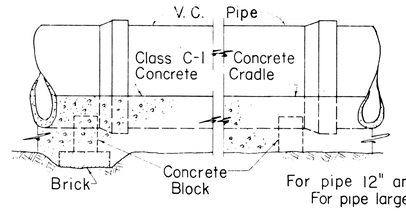

ELEVATION SHOWING METHOD OF LAYING PIPE

Not To Scale

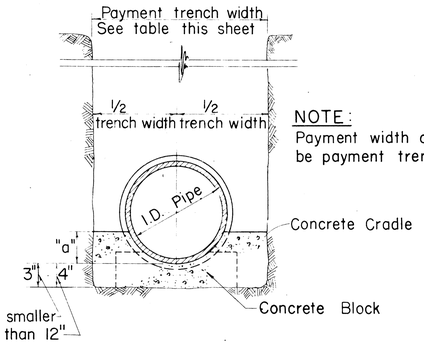

NOTE:
Payment width of cradle shall be payment trench width.

CONCRETE CRADLE FOR VITRIFIED CLAY PIPE

Not To Scale

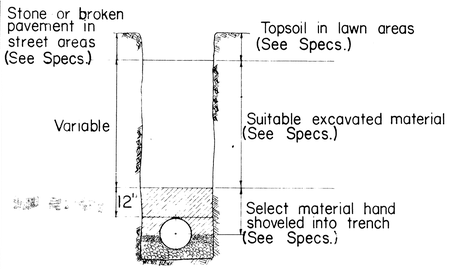

METHOD OF BACKFILL

Not To Scale

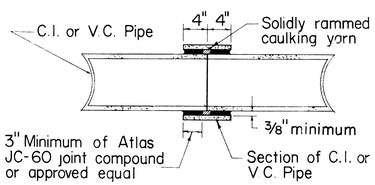

BUTT JOINT DETAIL

Scale: 1" = 1'-0"

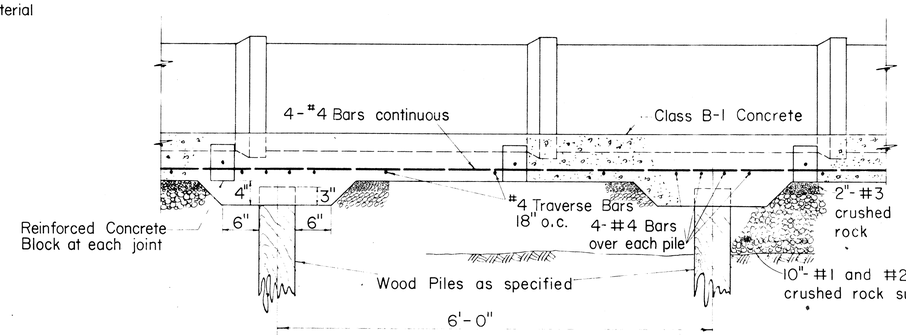

Scale: 1" = 1'-0"

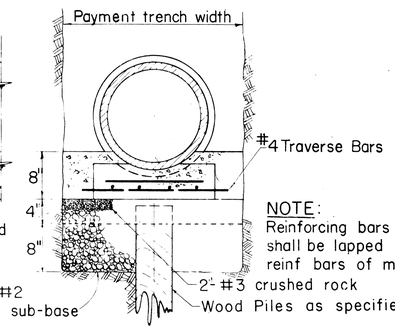

SECTION

NOTE:
Reinforcing bars of laterals shall be lapped 40 dia. to reinf bars of mains.

DETAIL OF REINFORCED CONCRETE CRADLE ON WOOD PILES

(FOR 6, 8, 10 & 12 IN. V.C. PIPE)

DETAIL OF REINFORCED CONCRETE CRADLE WITHOUT PILES SIMILAR EXCEPT FOR WOOD PILES AND PILE CAPS

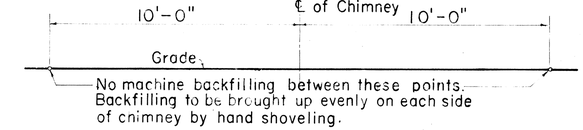

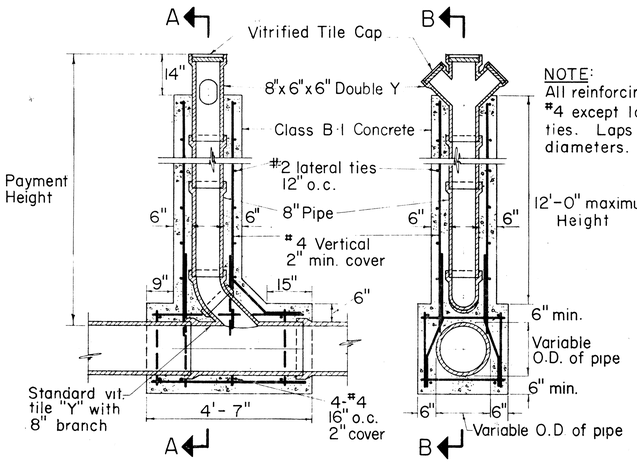

SECTION B-B SECTION A-A

DETAILS OF CHIMNEY

Scale: 1/2" = 1'-0"

Payment quantities for trench excavation, crushed rock fill, crushed rock cradle, and crushed rock sub-base shall be computed using payment trench widths as shown in the table of "Trench Widths". No payment shall be made for excess quantities resulting from trench widths greater than the payment trench widths shown.

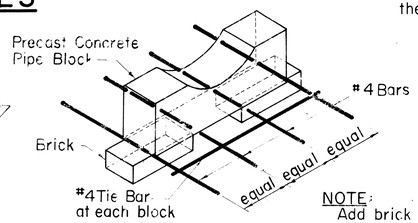

NOTE:
Add brick for larger size pipe

Not To Scale

ALTERNATE DETAIL OF CONC. PIPE BLOCK FOR REINF. CRADLE

VITRIFIED CLAY PIPE TABLE

TRENCH WIDTHS		DIM. OF CONC. CRADLE		
PIPE SIZE	PAY. WIDTH	PIPE SIZE	"a"	WIDTH
6"	24"	6"	3"	24"
8"	24"	8"	3"	24"
10"	24"	10"	3"	24"
12"	30"	12"	3"	30"
15"	38"	15"	4"	38"
18"	41"	18"	5"	41"
21"	45"	21"	5"	45"
24"	50"	24"	6"	50"
27"	53"	27"	7"	53"
30"	57"	30"	7"	57"

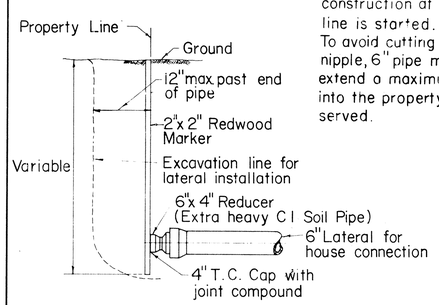

DETAIL AT PROPERTY LINE

NOTE: Permission is to be secured from property owner before construction at property line is started.
To avoid cutting of short nipple, 6" pipe may extend a maximum of 12" into the property to be served.

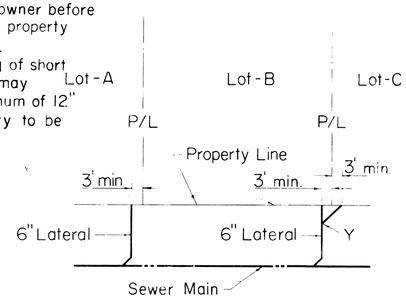

LAYOUT

CONSTRUCTION OF LATERALS

Not To Scale

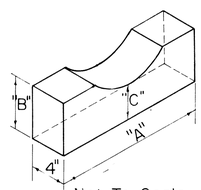

Not To Scale

DETAIL OF PRECAST CONC. PIPE BLOCK

CONCRETE BLOCK DIMENSIONS			
PIPE SIZE	"A"	"B"	"C"
6"	1'-2"	6"	3"
8"	1'-5"	6"	3"
10"	1'-7"	6"	3"
12"	1'-7"	6"	3"
15"	1'-8"	6"	4"
18"	1'-9"	6"	4"
21"	1'-10"	6"	4"
24"	1'-11"	6"	4"
27"	2'-0"	6"	4"
30"	2'-3"	6"	4"

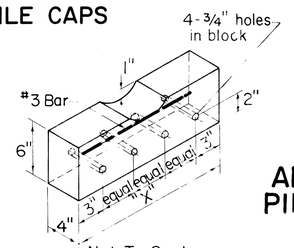

Not To Scale

DETAIL OF CONC. PIPE BLOCK FOR REINF. CRADLE

DIM. OF REINF. CONC. BLOCK	
PIPE SIZE	"X"
6"	1'-6"
8"	1'-6"
10"	1'-8"
12"	1'-8"
15"	1'-10"
18"	1'-10"
21"	1'-10"
24"	2'-0"
27"	2'-0"
30"	2'-0"

APPROVED:

for CHIEF, DIVISION OF SEWERS — 4/14/71 DATE

STATE OF HAWAII
DEPARTMENT OF TRANSPORTATION
HIGHWAYS DIVISION
DIVISION OF SEWERS
CITY & COUNTY OF HONOLULU

STANDARD DETAILS

SEWERS - CONCRETE JACKET & MISCELLANEOUS DETAILS

Scales: As Noted — Date: DEC. 24, 1970

SHEET NO. 23D OF 25 SHEETS

63