FED. ROAD DIST. NO.	STATE	FED. AID PROJ. NO.	FISCAL YEAR	SHEET NO.	TOTAL SHEETS
HAWAII	HAW.	M-7600(1)	1978	132	198

GENERAL NOTES

1. GENERAL SPECIFICATIONS: HAWAII DEPARTMENT OF TRANSPORTATION, STANDARD SPECIFICATIONS FOR ROAD AND BRIDGE CONSTRUCTION, 1976, TOGETHER WITH SPECIAL PROVISIONS PREPARED FOR THIS CONTRACT.
2. DESIGN SPECIFICATIONS: THE LATEST EDITION OF A.A.S.H.T.O. STANDARD SPECIFICATIONS FOR HIGHWAY BRIDGES.
3. LOADS:
   (A) DEAD LOAD: AN ALLOWANCE OF 18 P.S.F. FOR FUTURE WEARING SURFACE OF ASPHALT CONCRETE HAS BEEN PROVIDED FOR IN THE DESIGN.
   (B) LIVE LOAD: HS20-44 OR INTERSTATE LOADING.
4. MATERIALS:
   (A) ALL CONCRETE SHALL BE CLASS A UNLESS OTHERWISE NOTED.
   (B) CONCRETE FOR COUNTER WEIGHT SHALL BE CLASS B.
   (C) CONCRETE FOR PIERS COLUMN, BOX GIRDER CAP AND WINGWALLS (EXCLUDING PARAPETS) SHALL BE CLASS E. CONCRETE FOR DECK OF SUSPENDED SPANS SHALL BE CLASS BD.
   (D) ALL REINFORCING STEEL SHALL BE A.S.T.M. A615, GRADE 40 UNLESS OTHERWIDE NOTED.
   (E) ALL PIER COLUMN REINFORCEMENT SHALL BE A.S.T.M. A615, GRADE 60.
   (F) ALL STRUCTURAL STEEL SHALL BE A.S.T.M. A-36 HOT DIP GALVANIZED, UNLESS OTHERWISE NOTED.
   (G) ALL ANCHOR BOLTS WASHERS AND NUTS SHALL BE A.S.T.M. A-307, HOT DIP GALVANIZED, UNLESS OTHERWISE SPECIFIED.
   (H) FOR MATERIALS OF PRESTRESSED CONCRETE BEAM SEE PRESTRESSED CONCRETE NOTES.
5. DESIGN STRESSES: SHALL FOLLOW A.A.S.H.T.O. STANDARD SPECIFICATIONS FOR HIGHWAY BRIDGES IN ADDITION TO THOSE LISTED BELOW.

CONCRETE	CLASS A OR CLASS BD	CLASS E (EXCEPT PRESTRESSED CONCRETE BEAMS)
f'c	3000 P.S.I.	4500 P.S.I.
fc	1200 P.S.I.	1800 P.S.I.
n	9	7

   FOR PRESTRESSED CONCRETE BEAMS, SEE PRESTRESSED CONCRETE NOTES.
6. REINFORCEMENT:
   (A) THE MINIMUM COVERING MEASURED FROM THE SURFACE OF THE CONCRETE TO THE FACE OF ANY FACE OF ANY REINFORCING SHALL BE AS FOLLOWS UNLESS OTHERWISE SPECIFIED ON THE PLANS:
   A.1 DECK SLABS (FOR BOX GIRDERS, PRESTRESSED BEAMS)
      A. TOP BARS = 1 1/2"
      B. BOTTOM BARS = 1 1/4"
   A.2 BOX GIRDERS
      A. 1 1/4" TO STIRRUP FROM OUTSIDE FACES.
      B. 1" TO STIRRUP FROM INSIDE FACES.
   A.3 FOR PRESTRESSED CONCRETE BEAMS SEE PRESTRESSED CONCRETE BEAM DETAILS.
   A.4 PIERS AND RETAINING WALLS = 2"
   A.5 COLUMNS = 2" TO TIES
   A.6 CONCRETE CAST AGAINST AND PERMANENTLY EXPOSED TO EARTH = 3".
   (B) REINFORCING BARS SHALL BE DETAILED IN ACCORDANCE WITH A.C.I. MANUAL OF STANDARD PRACTISE FOR DETAILING REINFORCED CONCRETE HIGHWAY STRUCTURES UNLESS OTHERWISE NOTED.
   (C) MINIMUM CLEAR SPACING BETWEEN PARALLEL BARS SHALL BE 1 1/2 TIMES THE DIAMETER OF BARS (FOR NON BUNDLED BARS), BUT IN NO CASE SHALL THE CLEAR DISTANCE BETWEEN THE BARS BE LESS THAN 1 1/2 TIMES THE MAXIMUM SIZE OF THE COARSE AGGREGATE.
   (D) ALL DIMENSIONS RELATING TO REINFORCING BARS (EG. SPACING OF BARS, ETC.,) ARE TO CENTERS OF BARS UNLESS OTHERWISE NOTED.
   (E) REINFORCING BARS SHALL BE SECURELY TIED AT ALL INTERSECTIONS AND LAP SPLICES AND SHALL BE HELD IN PLACE DURING POURING TO MAINTAIN THEIR PROPER LOCATIONS AS SHOWN ON THE PLANS.
   (F) VERTICAL COLUMN BAR SHALL BE ARRANGED IN SUCH A MANNER AS TO AVOID INTERFERENCE WITH PIER CAP BARS ABOVE AS DIRECTED BY THE ENGINEER.
7. ELASTOMERIC PADS: BOTTOM OF BRIDGE BEARING PADS SHALL BE SECURED TO THE CONCRETE SEATS, TO PREVENT DISPLACEMENT, WITH ADHESIVES APPROVED BY THE ENGINEER.
8. CONSTRUCTION METHODS.
   (A) SEE STANDARD SPECIFICATIONS AND SPECIAL PROVISIONS.
   (B) IN GENERAL TOP OF CONCRETE DECK SLAB SHALL BE CONSTRUCTED TO FOLLOW THE ROADWWAY VERTICAL AND HORIZONTAL CURVES.
   (C) FOR CONCRETE FINISH SEE STANDARD SPECIFICATIONS AND FOR ARCHITECTURAL TREATMENT SEE DETAILS.
   (D) GIRDER CONCRETE SEATS RECEIVING ELASTOMERIC PADS SHALL BE POURED MONOLITHICALLY WITH SUPPORTING STRUCTURE. TOP OF CONCRETE SEATS SHALL BE FINISHED WITH A STEEL TROWEL TO A SMOOTH LEVEL SURFACE TO THE ELEVATION SHOWN ON THE PLANS.
   (E) IN THE INSTALLATION OF DOWELS FOR BRIDGE BEARING, THE CONTRACTOR SHALL PROVIDE RIGID TEMPLATE TO MAINTAIN THE PROPER LOCATION AND SHALL PROTECT THEM AT ALL TIMES DURING THE CONSTRUCTION PERIOD METHODS SHALL BE APPROVED BY THE ENGINEER.
   (F) EXCEPT AS OTHERWISE NOTED, ALL VERTICAL DIMENSIONS ARE MEASURED PLUMB.
9. GENERAL
   (A) ALL ITEMS NOTED INCIDENTAL WILL NOT BE PAID FOR SEPARATELY.
   (B) THE CONTRACTOR SHALL VERIFY THE LOCATION OF ALL UTILITY LINES AND NOTIFY THE RESPECTIVE OWNERS BEFORE COMMENCING THE WORK OF EXCAVATION OR THE DRIVING OF PILES, INCLUDING ANY TEMPORARY PILING OR SHEETING.
   (C) CONSTRUCTION JOINTS MAY BE RELOCATED OR ADDITIONAL ONES ADDED SUBJECT TO THE APPROVAL OF THE ENGINEER.
   (D) UNLESS OTHERWISE NOTED, ALL EXPOSED CONCRETE EDGES SHALL BE CHAMFERED 3/4" x 3/4".
   (E) FOR ELECTRICAL CONDUIT LOCATION DETAILS SEE ELECTRICAL DRAWINGS.
10. FOUNDATION NOTES:
   (A) DESIGN LOAD FOR ALL PILES = 100 TONS (AASHTO GROUP I).
   (B) PILE TIP ELEVATION = 26.5 AND PILE CUT-OFF ELEVATION = 57.0 FOR ALL PILES.
   (C) LOAD TEST PILES INDICATED IN FOUNDATION PLAN SHALL BE FURNISHED 12 FEET LONGER THAN REGULAR PILES.
   (D) TEST PILES INDICATED IN FOUNDATION PLAN SHALL BE FURNISHED 5' LONGER THAN REGULAR PILES.
   (E) IN DRIVING EACH GROUP OF PILES, THE CONTRACTOR SHALL START FROM CENTER OF THE GROUP AND PROCEED OUTWARD.
   (F) CONCRETE IN TYPE I (16 1/2" OCTAGONAL) PRESTRESSED CONCRETE PILES SHALL HAVE A MINIMUM 28-DAY COMPRESSIVE STRENGTH OF 5000 PSI.
11. REFERENCES:
   (A) FOR PRESTRESSED CONCRETE NOTES, SEE DRAWINGS FOR PRESTRESSED BEAM DETAILS.
12. SYMBOLS AND ABBREVIATIONS

(E) OR (EXP.)	- EXPANSION	JT.	- JOINT
(H)	- HINGE	N.T.S.	- NOT TO SCALE
ALT.	- ALTERNATE	O.C.	- ON CENTERS
AZ.	- AXIMUTH	O/S	- OFFSET
℄	- CENTERLINE	STR.	- STRAIGHT OR STRINGER
℄	- BASELINE	STIRR.	- STIRRUP
E.F.	- EACH FACE	TYP.	- TYPICAL
B.F.	- BOTH FACES	(T) OR T.	- TOP
F.F.	- FAR FACE	(B) OR B.	- BOTTOM
N.F.	- NEAR FACE	BRG.	- BEARING
C.J.	- CONSTRUCTION JOINT	B.H. ELEV.	- BUSH HAMMER ELEVATION
CL.	- CLEAR	T.O.D.	- TOP OF DECK
EL., ELEV.	- ELEVATION	W.P.	- WORKING POINT
E.P.	- EDGE OF PAVEMENT	@	- AT
EB	- EAST BOUND	Ø OR DIA.	- DIAMETER
FIN. GR.	- FINISHED GRADE	▱	- PLATE
WB	- WEST BOUND	G.R.P.	- GROUTED RUBBLE PAVING

INDEX TO BRIDGE DRAWINGS

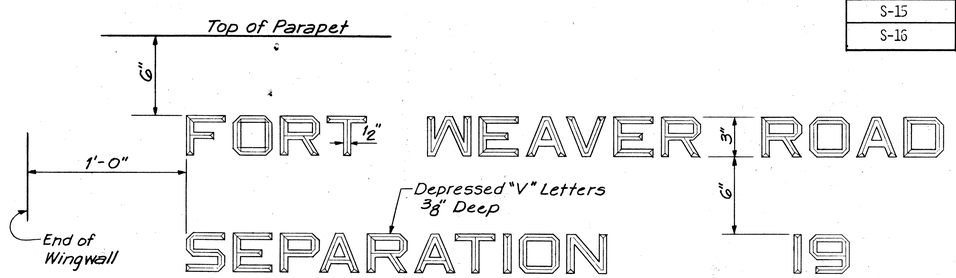

NOTE: For Locations of Name and Date, see sh. No. S-2. Exact Details and Spacing of Letters and Figures shall be as directed by the Engineer.

NAME & DATE OF STRUCTURE

JOHN P. JOHNSON REGISTERED PROFESSIONAL ENGINEER No. 3647 HAWAII, U.S.A.

THIS WORK WAS PREPARED BY ME OR UNDER MY SUPERVISION.

STATE OF HAWAII
DEPARTMENT OF TRANSPORTATION
HIGHWAYS DIVISION

GENERAL NOTES

FORT WEAVER ROAD
ROUTE H-1 TO SOUTH OF
FARRINGTON HIGHWAY
PROJECT NO. M-7600(1)

SCALE: NONE DATE: AUG. 1978

SHEET No. S-1 OF S-16 SHEETS

132

ORIGINAL PLAN | NOTE BOOK No. | SURVEY PLOTTED BY | DRAWN BY | TRACED BY | DESIGNED BY | QUANTITIES BY | CHECKED BY | DATE

PRINTED ON NO. 1000H CLEARPRINT

FED. ROAD DIST. NO.	STATE	FED. AID PROJ. NO.	FISCAL YEAR	SHEET NO.	TOTAL SHEETS
HAWAII	HAW.	M-7600(1)	1978	133	198

CURVE (1) DATA	
Δ	41°-28'-57.7"
R	4000'
L	2896.04'
T	1514.77'
P.C. Sta. =	78+10.37
P.T. Sta. =	107+06.41

NOTES:

1. For Details of Concrete Guard Rail & Cushion Barrier see sheet No. S-13.
2. For Location and Details of Lighting Standards and Conduits see Civil and Electrical Plans.

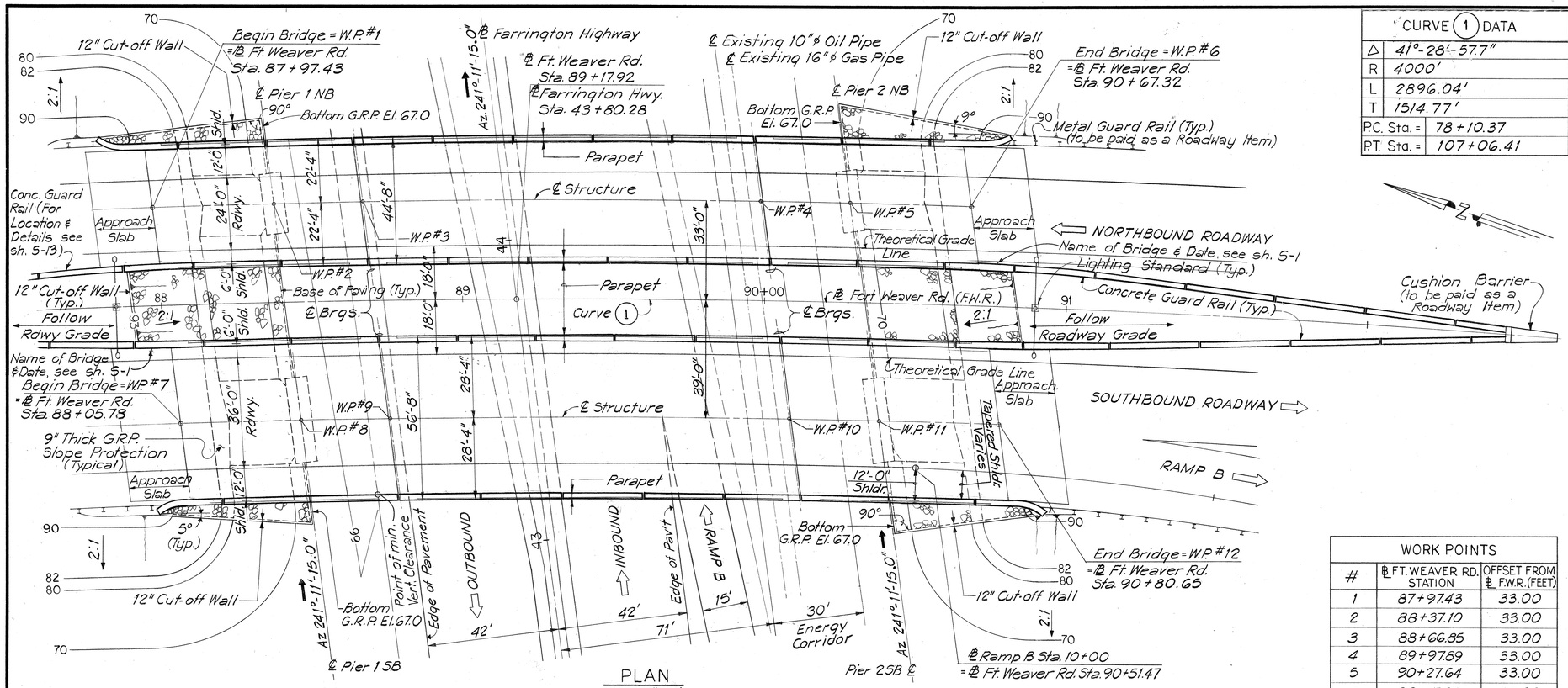

PLAN
SCALE: 1"=20'

WORK POINTS		
#	℄ FT. WEAVER RD. STATION	OFFSET FROM ℄ F.W.R. (FEET)
1	87+97.43	33.00
2	88+37.10	33.00
3	88+66.85	33.00
4	89+97.89	33.00
5	90+27.64	33.00
6	90+67.32	33.00
7	88+05.78	39.00
8	88+46.17	39.00
9	88+76.47	39.00
10	90+09.97	39.00
11	90+40.26	39.00
12	90+80.65	39.00

ESTIMATED QUANTITIES			
NO.	ITEM	UNIT	QUANTITY
206.6000	Structure Excavation for Bridges	Cu. Yd.	1,090
206.7000	Structure Backfill	Cu. Yd.	380
206.8000	Filter Material	Cu. Yd.	222
411.1300	Concrete in Approach Slab	Cu. Yd.	110
503.1092	Concrete in Bridges (Except Footings & Counterweights)	L.S.	(2,560 C.Y.)
503.1093	Concrete in Bridge Footings (Includes pedestals)	L.S.	(720 C.Y.)
503.2150	Concrete in Counterweight	L.S.	(1,080 C.Y.)
504.6300	Keehi Type VI Prestressed Conc. Girder	Lin. Ft.	2,140
505.0010	Pile Load Tests	Each	2
505.0020	Test Piles, Driven	Lin. Ft.	210
505.0410	Type I Prestressed Conc. Piles, Furnished	Lin. Ft.	5,970
505.4100	Type I Prestressed Concrete Piles, Driven	Lin. Ft.	5,430
505.9000	Extensions or Build-ups of Piles	F.A.	
507.7000	Conc. Bridge Parapet, Including End Post	Lin. Ft.	1,185
511.0100	Deck Expansion Joints	Lin. Ft.	200
602.0051	Reinforcing Steel in Bridges	L.S.	909,000#
612.0100	Grouted Rubble Paving	Cu. Yd.	325

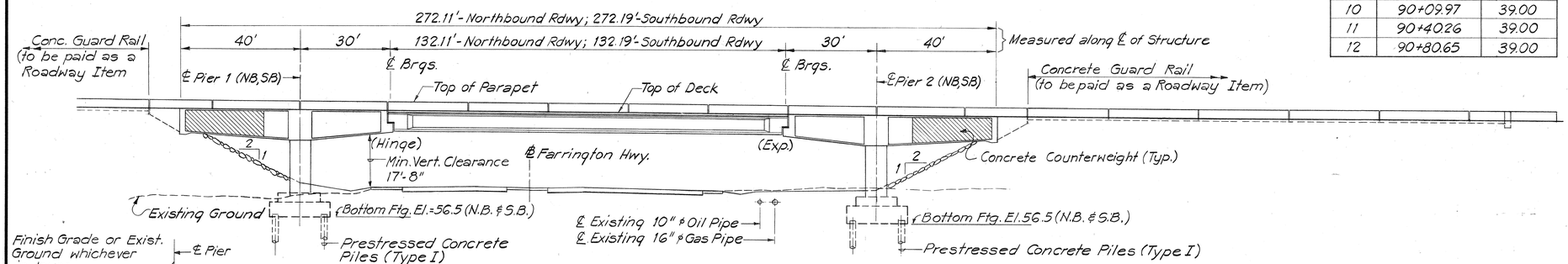

LONGITUDINAL SECTION
SCALE: 1"=20'

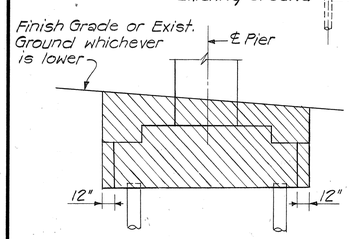

NOTE: Hatched areas denote limits of structure excavation pay line. All other excavation shall be roadway excavation except as noted. For additional payment limit see Detail "Z" on sht. No. S-6

PAYMENT LIMIT
N.T.S.

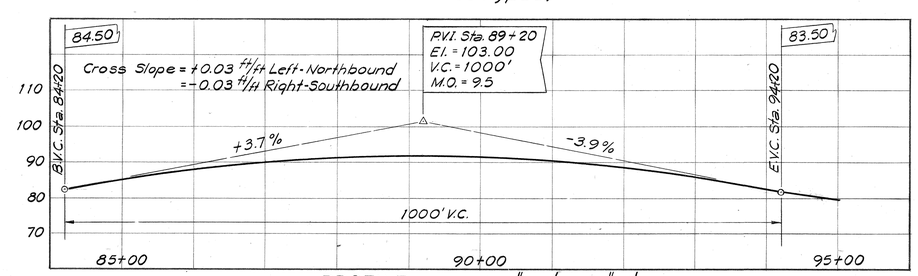

PROFILE - SCALE: HOR. 1"=100', VERT. 1"=20'

JOHN P. JOHNSON
REGISTERED PROFESSIONAL ENGINEER
No. 3647
HAWAII, U.S.A.

THIS WORK WAS PREPARED BY ME OR UNDER MY SUPERVISION.

John P. Johnson

STATE OF HAWAII
DEPARTMENT OF TRANSPORTATION
HIGHWAYS DIVISION

GENERAL PLAN AND LONGITUDINAL SECTION

FORT WEAVER ROAD
ROUTE H-1 TO SOUTH OF
FARRINGTON HIGHWAY
PROJECT NO. M-7600(1)

SCALE: AS SHOWN DATE: AUG. 1978

SHEET No. S-2 OF S-16 SHEETS

ORIGINAL PLAN | NOTE BOOK No. | SURVEY PLOTTED BY | DRAWN BY | TRACED BY | DESIGNED BY | QUANTITIES BY | CHECKED BY | DATE

FED. ROAD DIST. NO.	STATE	FED. AID PROJ. NO.	FISCAL YEAR	SHEET NO.	TOTAL SHEETS
HAWAII	HAW.	M-7600(1)	1978	134	198

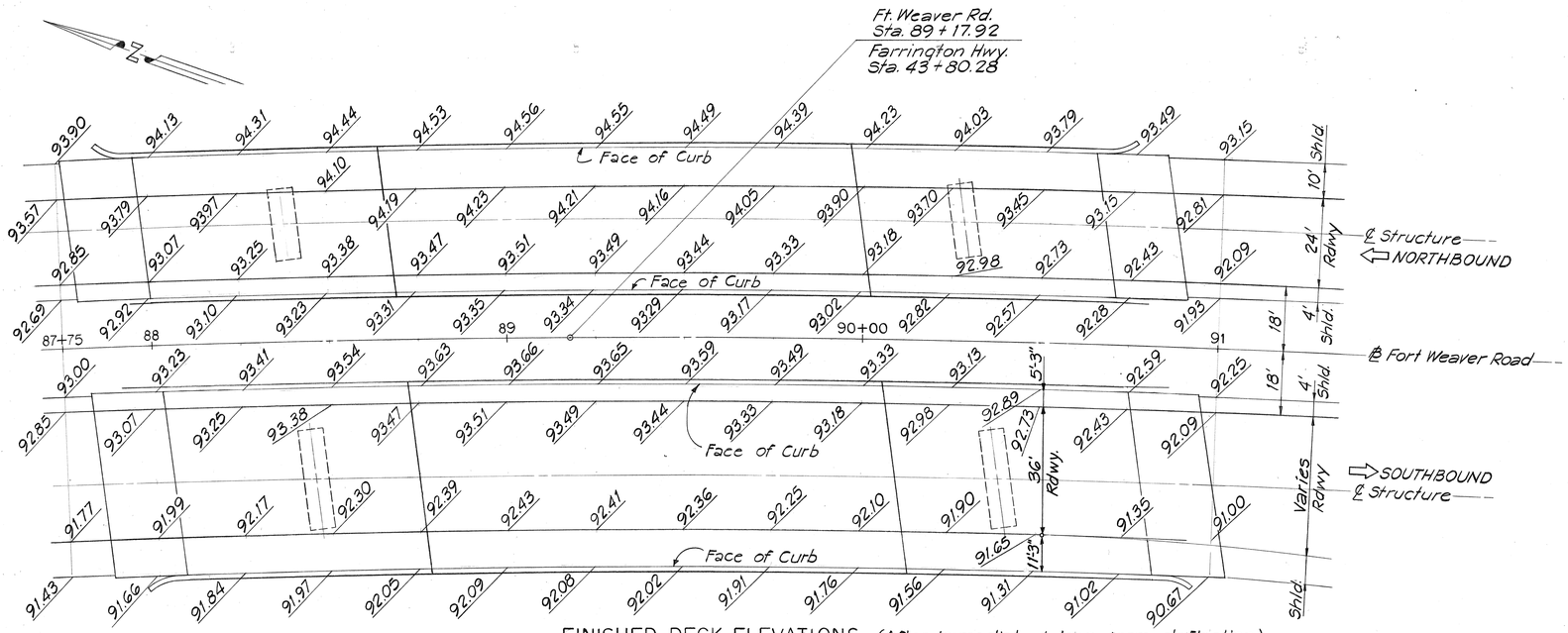

FINISHED DECK ELEVATIONS (After Immediate & long term deflection)

SCALE: 1" = 20'

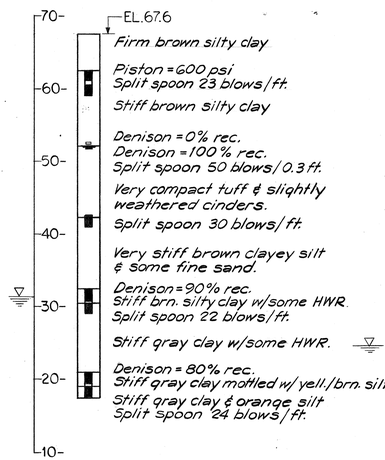

BORING B-1

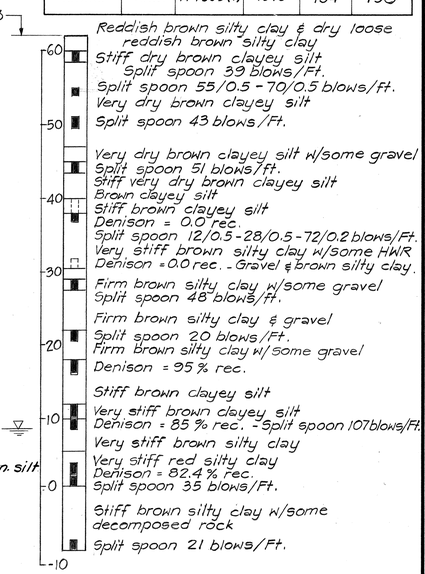

BORING FW-1

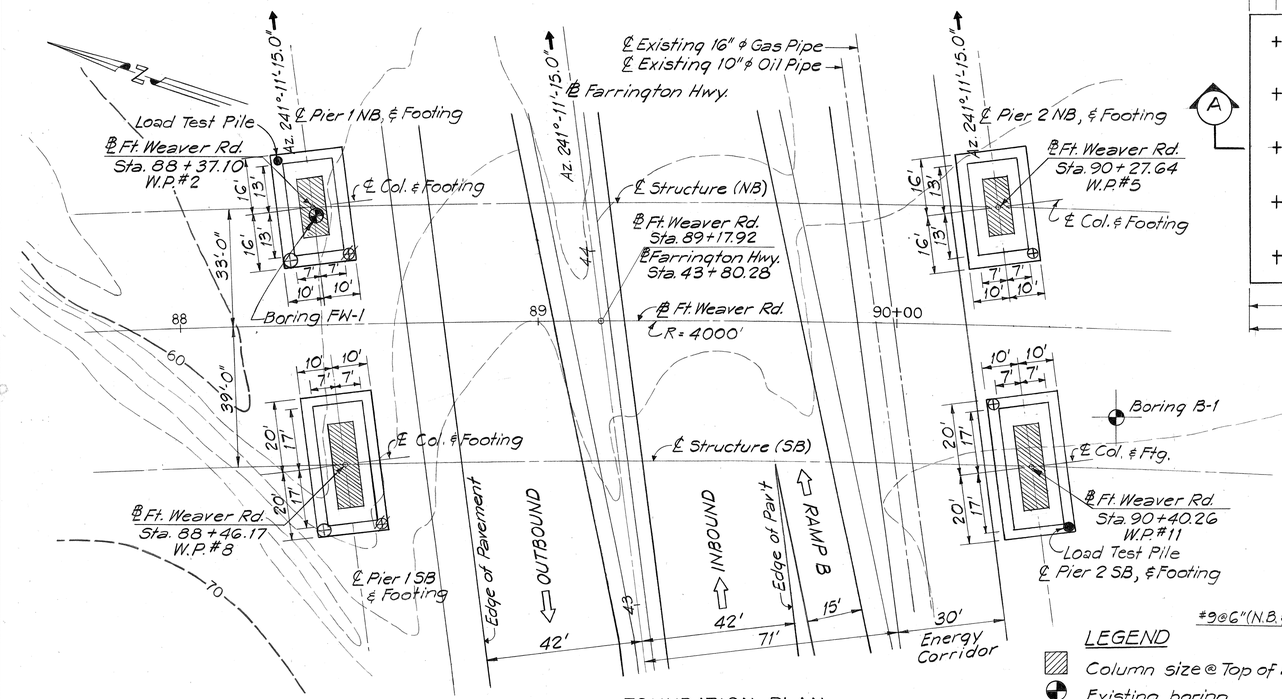

FOUNDATION PLAN

SCALE: 1" = 20'

LEGEND

- Column size @ Top of Ftg.
- Existing boring
- Test Pile
- Load Test Pile

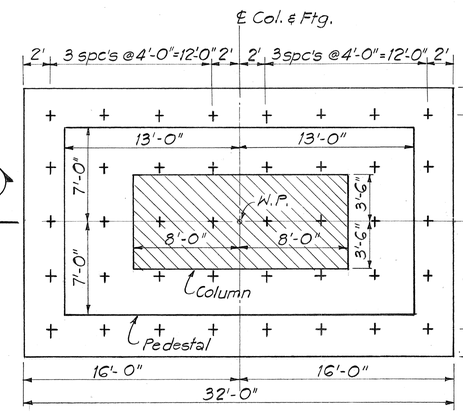

PILE FOOTING PLAN - NORTH BOUND

SCALE: 3/16" = 1'-0"

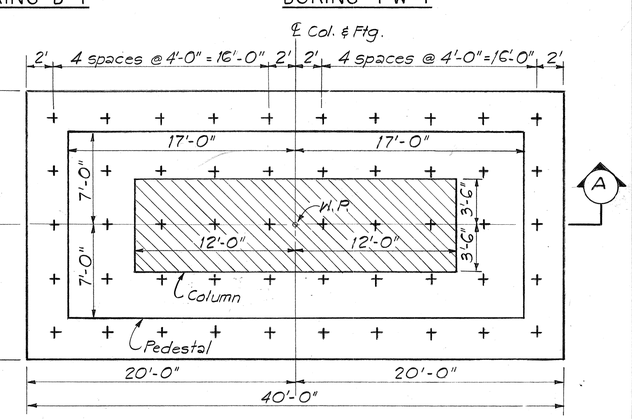

PILE FOOTING PLAN - SOUTH BOUND

SCALE: 3/16" = 1'-0"

NOTE: Footing pedestals shall be poured monolithic with Footing

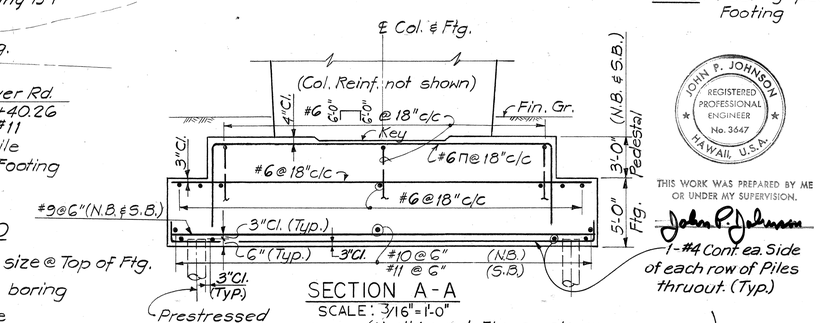

SECTION A-A

SCALE: 3/16" = 1'-0"

(Northbound Ftg. as shown. Southbound Ftg. similar, except as noted)

JOHN P. JOHNSON
REGISTERED PROFESSIONAL ENGINEER
No. 3647
HAWAII, U.S.A.

THIS WORK WAS PREPARED BY ME OR UNDER MY SUPERVISION.

John P. Johnson

STATE OF HAWAII
DEPARTMENT OF TRANSPORTATION
HIGHWAYS DIVISION

DECK ELEVATIONS AND FOUNDATION PLAN

FORT WEAVER ROAD
ROUTE H-1 TO SOUTH OF
FARRINGTON HIGHWAY
PROJECT NO. M-7600(1)

SCALE: AS SHOWN DATE: AUG. 1978

SHEET No. S-3 OF S-16 SHEETS

ORIGINAL PLAN	SURVEY PLOTTED BY	DATE
	DRAWN BY	
	TRACED BY	
	DESIGNED BY	
NOTE BOOK	QUANTITIES BY	
NO.	CHECKED BY	

FED. ROAD DIST. NO.	STATE	FED. AID PROJ. NO.	FISCAL YEAR	SHEET NO.	TOTAL SHEETS
HAWAII	HAW.	M-7600(1)	1978	135	198

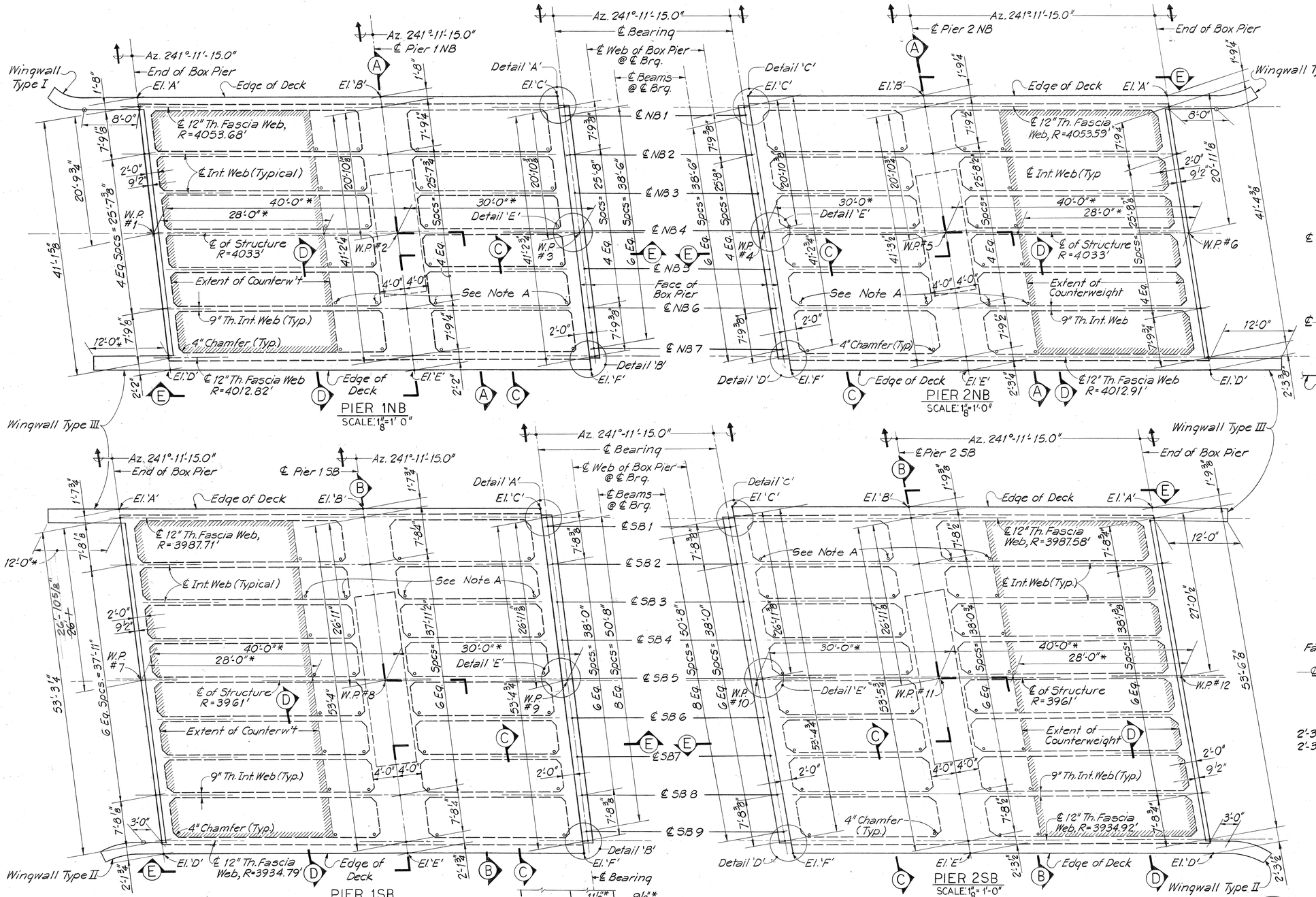

* DIMENSIONS MEASURED ALONG THE CURVE OF THE ℄ OF STRUCTURE.

NOTE A:
3" dia. non-rusting material drain and vent in bottom Slab (Typ.) (Incidental to concrete in Bridges)

NOTES:
1. For Wingwall Details see Sheet No. S-8.
2. Framing plans drawn at Top of Deck.
3. For Sections A-A, B-B, C-C, D-D and E-E see Sheet No. S-5.

JOHN P. JOHNSON
REGISTERED PROFESSIONAL ENGINEER
No. 3647
HAWAII, U.S.A.

THIS WORK WAS PREPARED BY ME OR UNDER MY SUPERVISION.
John P. Johnson

STATE OF HAWAII
DEPARTMENT OF TRANSPORTATION
HIGHWAYS DIVISION

BOX PIER-SHEET 1 OF 4
FRAMING PLAN

FORT WEAVER ROAD
ROUTE H-1 TO SOUTH OF
FARRINGTON HIGHWAY
PROJECT NO. M-7600(1)

SCALE: AS SHOWN DATE: AUG. 1978

SHEET No. S-4 OF S-16 SHEETS

ORIGINAL PLAN | SURVEY PLOTTED BY | DRAWN BY | TRACED BY | DESIGNED BY | QUANTITIES BY | CHECKED BY | DATE | NOTE BOOK | No.

FED. ROAD DIST. NO.	STATE	FED. AID PROJ. NO.	FISCAL YEAR	SHEET NO.	TOTAL SHEETS
HAWAII	HAW.	M-7600(1)	1978	136	198

NOTE: Cap Beam Reinforcing Symmetrical about ℄ of Structures.

* Dimensions measured along ℄ of Beams.

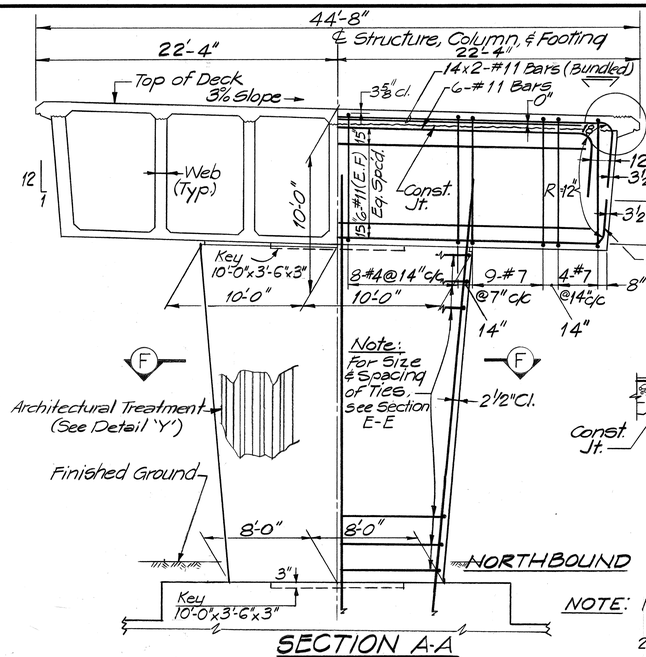

SECTION A-A
Scale: 3/16"=1'-0"

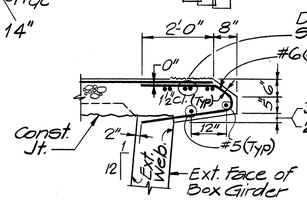

DETAIL 'A'
Scale: ½"=1'-0"

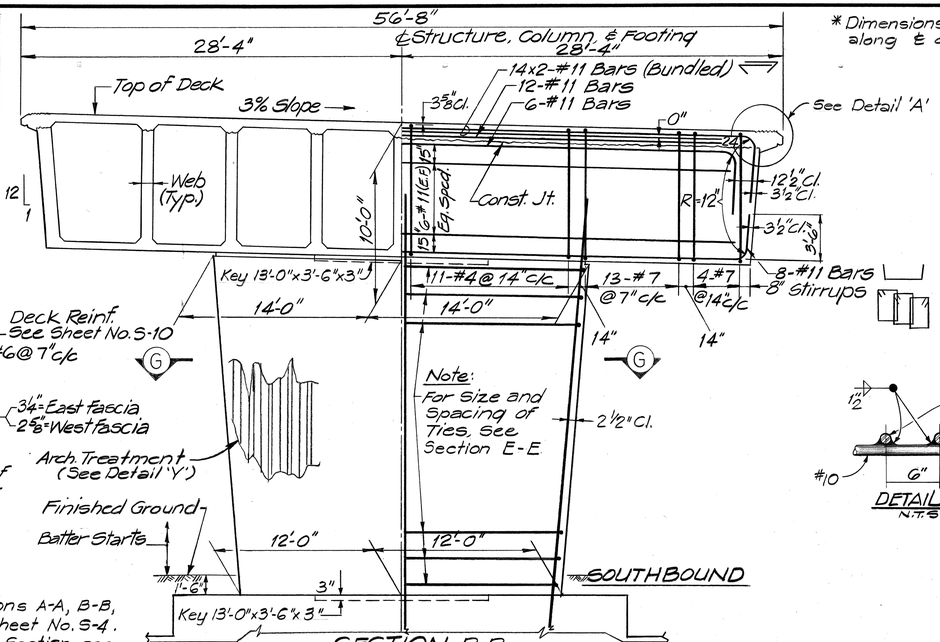

SECTION B-B
Scale: 3/16"=1'-0"

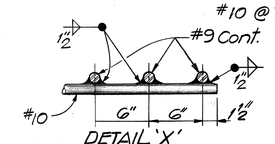

DETAIL 'X'
N.T.S.

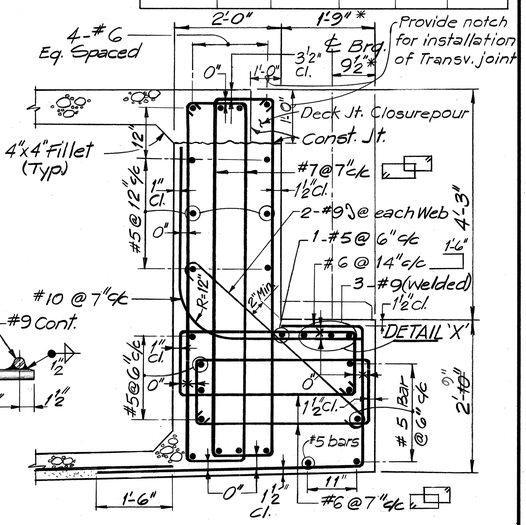

BOX GIRDER DAPPED END BEAM
Scale: ¾"=1'-0"

NOTE:
1. For Location of Sections A-A, B-B, C-C, D-D & E-E see sheet No. S-4.
2. For Typical Cap Beam Section, see sheet No. S-6
3. #11 bars, over 60' long in Cap Beam shall have mechanical splices.
4. For reinforcements in conc. parapets, see Sections E-E & F-F on sheet No. S-10.
5. For Typical Dapped End Beam View see sht. No. S-7
6. Bottom Fillets of Box Pier are optional.

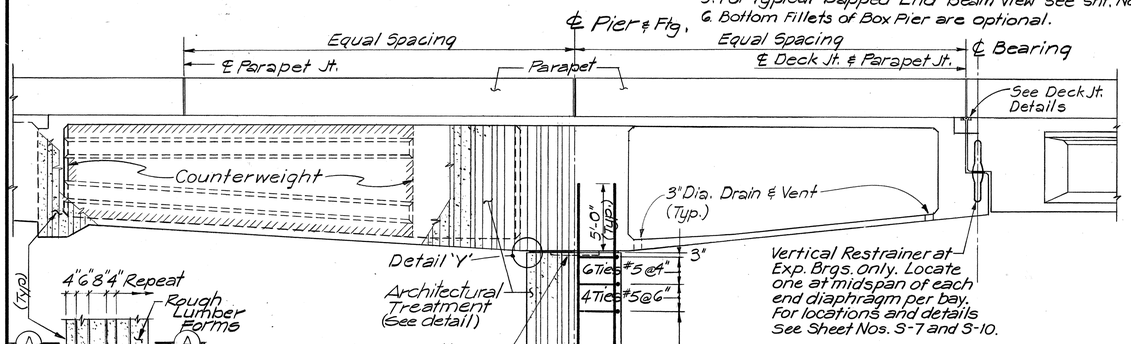

SECTION A-A
N.T.S.

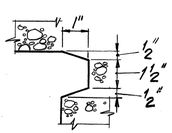

DETAIL 'Y' - N.T.S.
ARCHITECTURAL TREATMENT

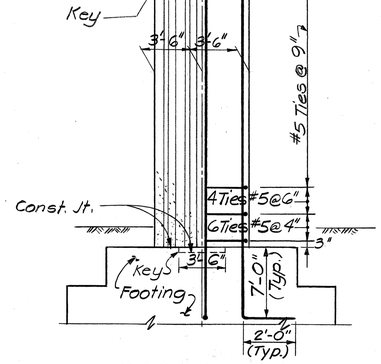

SECTION E-E
N.T.S.

NOTE: All reinforcements shown in Sections F-F & G-G shall be ASTM A615, Grade 60.

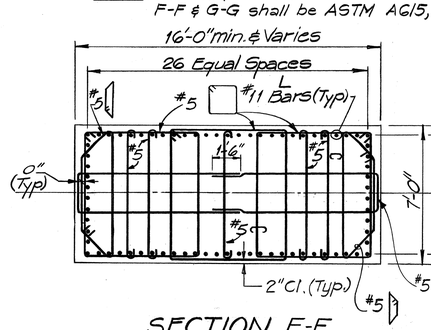

SECTION F-F
N.T.S.

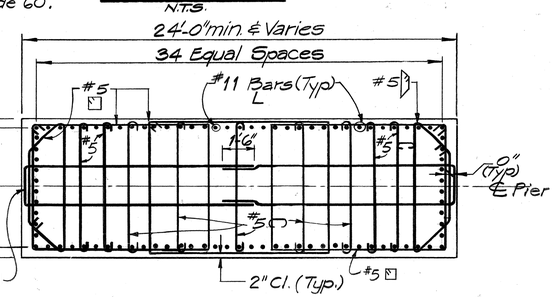

SECTION G-G
N.T.S.

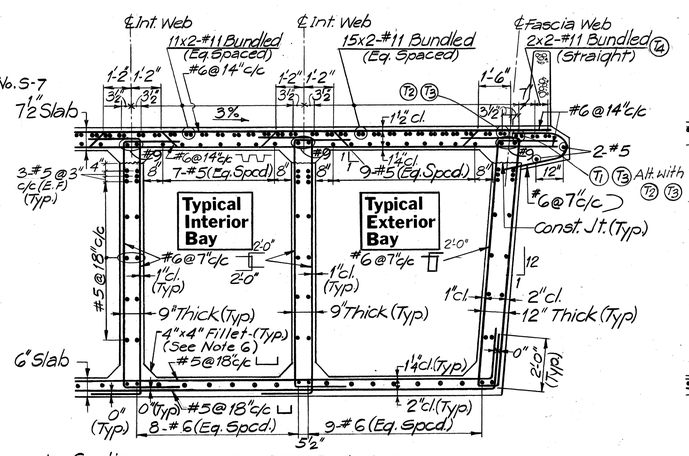

SECTION C-C
N.T.S.

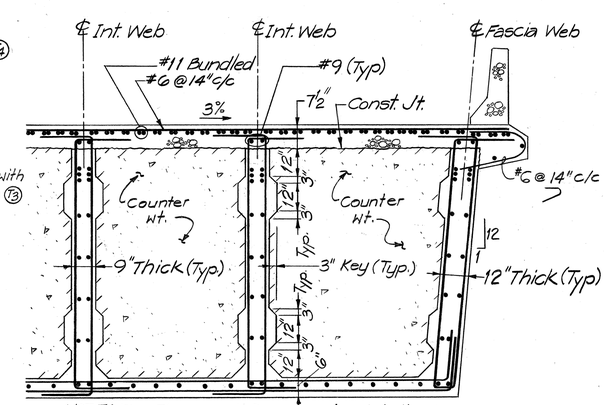

NOTE: Top Flange reinforcements detailed For Details of Web & Bottom Flange Reinforcing, See Sect. C-C

SECTION D-D
N.T.S.

ORIGINAL PLAN	SURVEY PLOTTED BY	DATE
	DRAWN BY	
	TRACED BY	
NOTE BOOK	DESIGNED BY	
	QUANTITIES BY	
NO.	CHECKED BY	

JOHN P. JOHNSON REGISTERED PROFESSIONAL ENGINEER No. 3647 HAWAII, U.S.A.

THIS WORK WAS PREPARED BY ME OR UNDER MY SUPERVISION.
John P. Johnson

STATE OF HAWAII
DEPARTMENT OF TRANSPORTATION
HIGHWAYS DIVISION

BOX PIER - SHEET 2 OF 4
SECTIONS AND DETAILS

FORT WEAVER ROAD
ROUTE H-1 TO SOUTH OF
FARRINGTON HIGHWAY
PROJECT NO. M-7600(1)

SCALE: AS SHOWN DATE: AUG. 1978

SHEET No. S-5 OF S-16 SHEETS

FED. ROAD DIST. NO.	STATE	FED. AID PROJ. NO.	FISCAL YEAR	SHEET NO.	TOTAL SHEETS
HAWAII	HAW.	M-7600(1)	1978	137	198

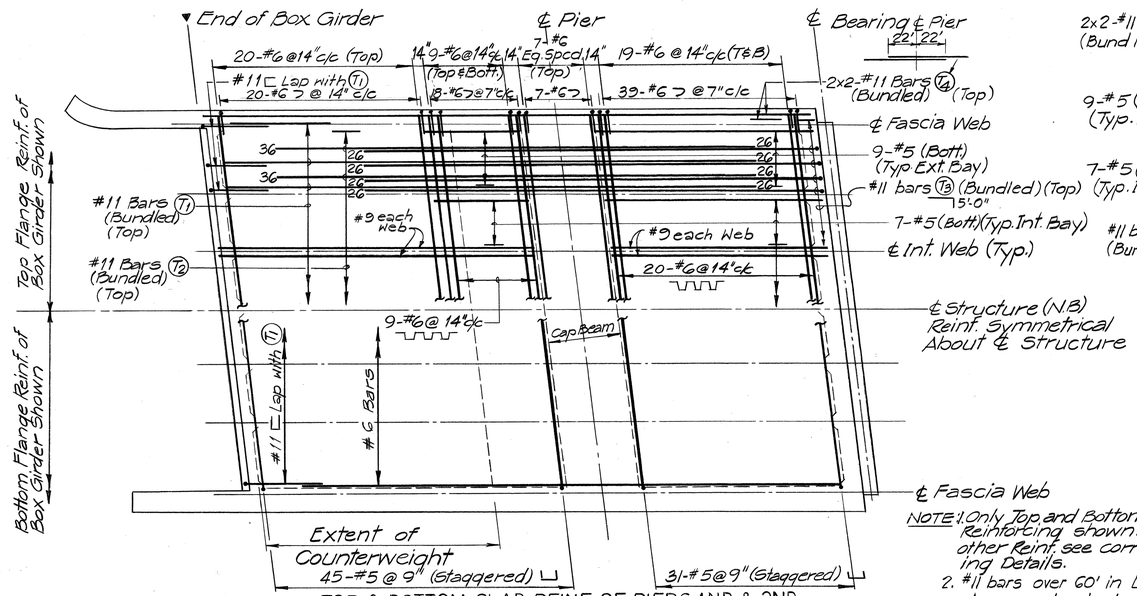

NOTE: 1. Only Top and Bottom Flange Reinforcing shown. For all other Reinf. see corresponding Details.
2. #11 bars over 60' in Length shall have mechanical splice.

TOP & BOTTOM SLAB REINF. OF PIERS 1NB & 2NB
SCALE: 1/8" = 1'-0"

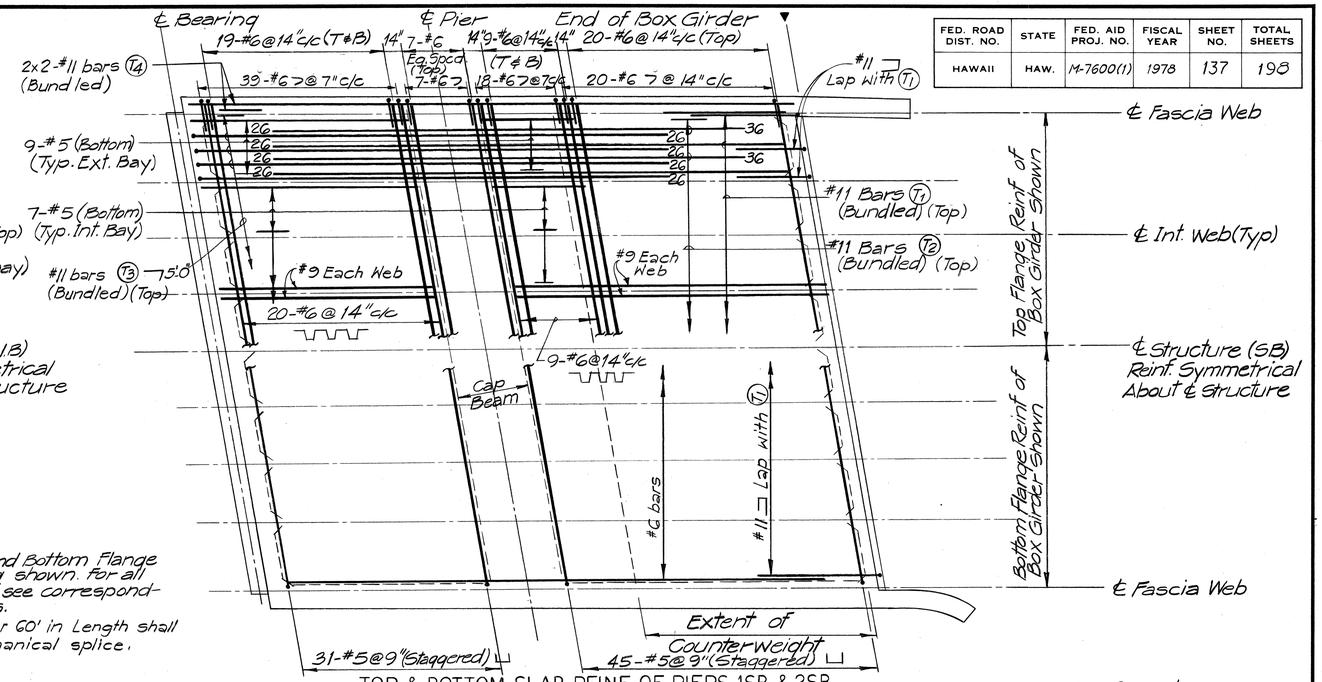

TOP & BOTTOM SLAB REINF. OF PIERS 1SB & 2SB
SCALE: 1/8" = 1'-0"

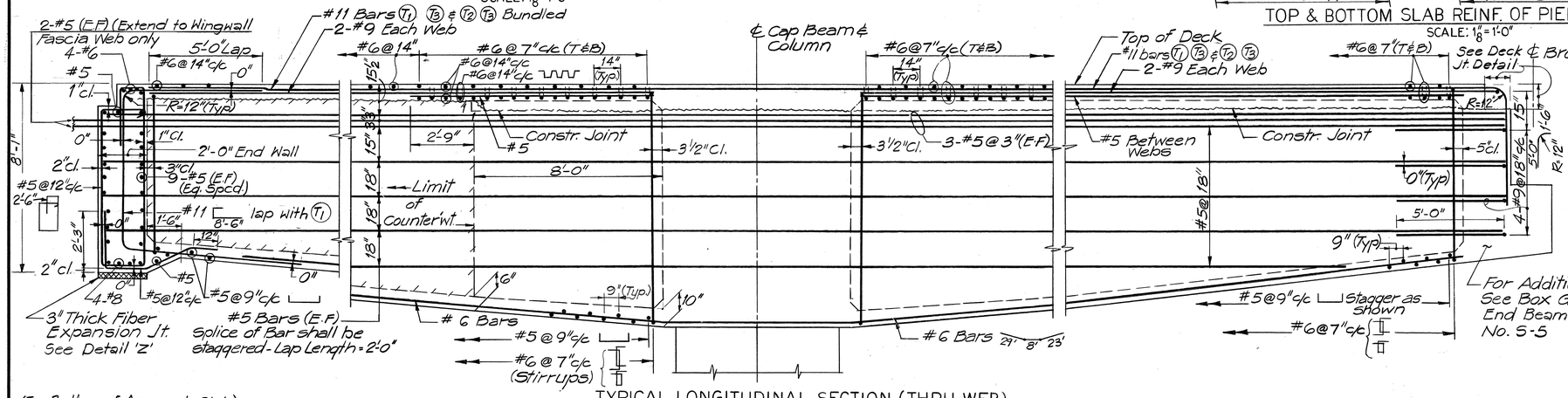

TYPICAL LONGITUDINAL SECTION (THRU WEB)
SCALE: 3/8" = 1'-0"

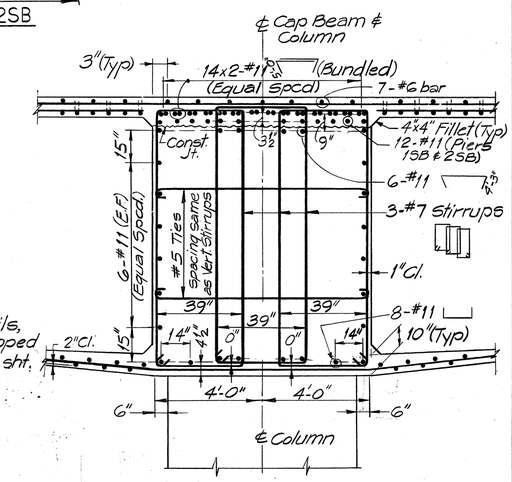

TYPICAL CAP BEAM SECTION
SCALE: 3/8" = 1'-0"

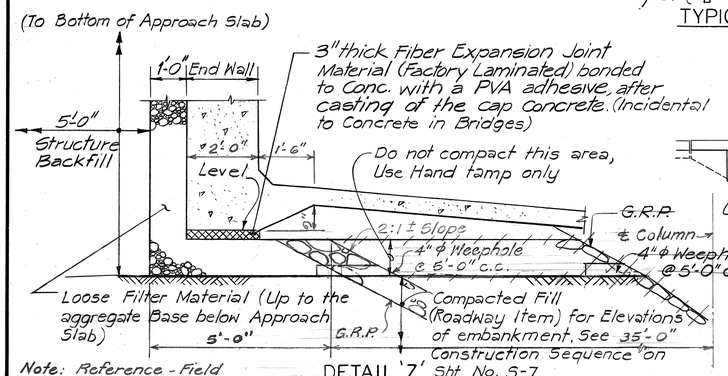

Note: Reference - Field Revision No. 23

DETAIL 'Z'
SCALE: 1 1/2" = 1'-0"

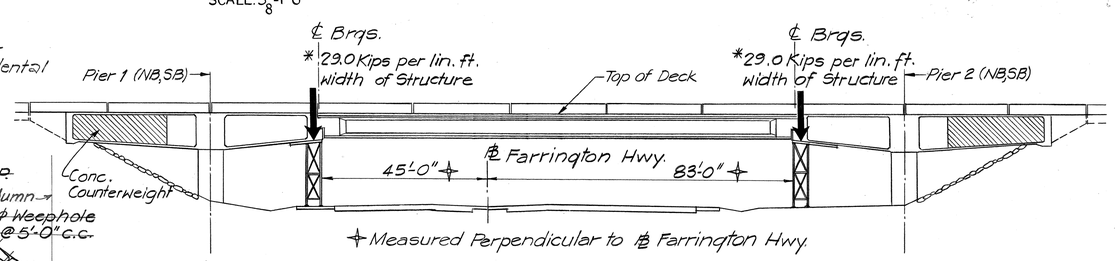

FORMWORK CLEARANCE & LOADING
N.T.S.

*NOTE:
Loads on false work include suspended span deadload and Dapped End Beam dead load only. The Construction Impact is not included. The Contractor shall also comply with the requirements of Section 503.03 (B) of Hawaii State Standard of Specification, 1976.

JOHN P. JOHNSON
REGISTERED PROFESSIONAL ENGINEER
No. 3647
HAWAII, U.S.A.

THIS WORK WAS PREPARED BY ME OR UNDER MY SUPERVISION.
John P. Johnson

STATE OF HAWAII
DEPARTMENT OF TRANSPORTATION
HIGHWAYS DIVISION

BOX PIER-SHEET 3 OF 4
SLAB REINFORCEMENT AND SECTIONS
FORT WEAVER ROAD
ROUTE H-1 TO SOUTH OF FARRINGTON HIGHWAY

SCALE: AS SHOWN DATE: AUG. 1978
SHEET No. S-6 OF S-16 SHEETS

ORIGINAL PLAN | SURVEY PLOTTED BY | DRAWN BY | TRACED BY | DESIGNED BY | QUANTITIES BY | CHECKED BY | DATE | NOTE BOOK | No.

FED. ROAD DIST. NO.	STATE	FED. AID PROJ. NO.	FISCAL YEAR	SHEET NO.	TOTAL SHEETS
HAWAII	HAW.	M-7600(1)	1978	138	198

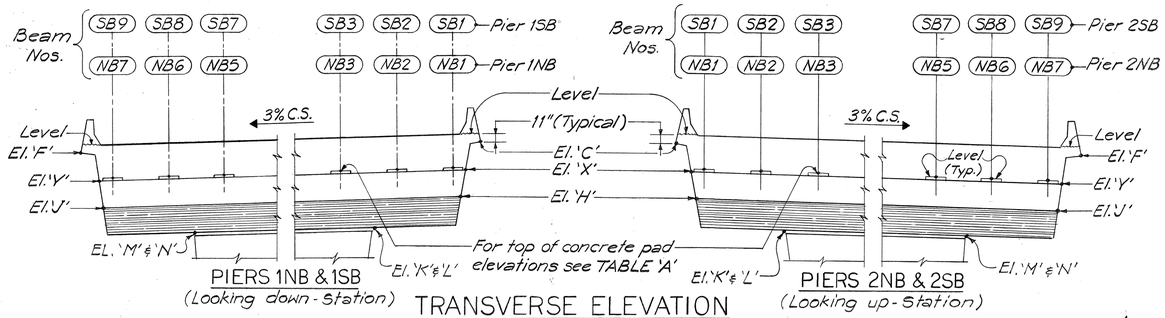

TRANSVERSE ELEVATION
N.T.S.

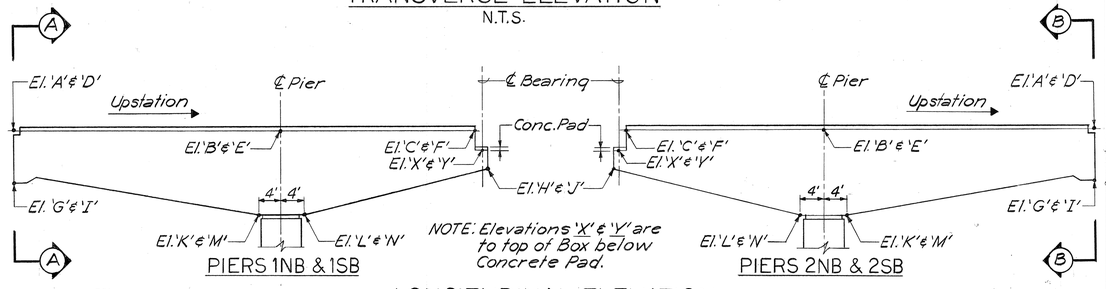

LONGITUDINAL ELEVATION
N.T.S.

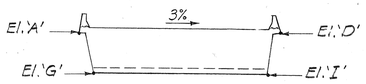

SECTION A-A
N.T.S.

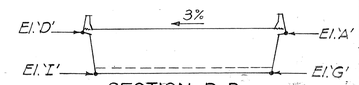

SECTION B-B
N.T.S.

TABLE B															
Pier	ELEVATIONS														
	A	B	C	D	E	F	G	H	I	J	K	L	M	N	X	Y
1NB	93.17	93.45	93.57	92.00	92.26	92.38	86.02	87.43	84.84	86.22	84.03	84.10	83.45	83.52	90.19	88.97
2NB	92.72	93.13	93.39	91.40	91.84	92.08	85.55	87.20	84.25	85.94	83.70	83.73	83.07	83.11	89.96	88.68
1SB	92.33	92.59	92.70	90.81	91.05	91.14	85.18	86.55	83.65	84.98	83.11	83.18	82.29	82.36	89.31	87.73
2SB	91.67	92.12	92.37	89.95	90.44	90.72	84.51	86.23	82.80	84.58	82.62	82.66	81.74	81.78	88.98	87.32

TABLE A				
Beam	Pier	Conc. Pad Elev.	Pier	Conc. Pad Elev.
NB1	1NB	90.52	2NB	90.29
NB2	↓	90.33	↓	90.10
NB3		90.14		89.90
NB4		89.96		89.70
NB5		89.77		89.50
NB6	↓	89.58	↓	89.31
NB7	1NB	89.39	2NB	89.11
SB1	1SB	89.65	2SB	89.31
SB2	↓	89.46	↓	89.12
SB3		89.27		88.92
SB4		89.09		88.73
SB5		88.90		88.53
SB6		88.72		88.34
SB7		88.53		88.14
SB8	↓	88.34	↓	87.95
SB9	1SB	88.16	2SB	87.75

CONSTRUCTION SEQUENCE (Shall be Followed)

STAGE 1: Construct the approach embankments for both Northbound and Southbound structures to the elevations shown below.

STAGE 2: Construct the piers' foundation, columns, box girder pier cap bottom slab and the webs and counterweight. Minimum compressive strength of column concrete (cylinder strength) before removal of form = 3,000 p.s.i. Under no circumstances shall the falsework and forms for pier cap bottom slab be removed before the completion of the structure. Web forms shall not be removed for at least 7 days after the web concrete is placed and not before the web concrete has attained a compressive strength (cylinder strength) of 3,000 p.s.i.. Falsework supporting the bottom slab near the pier cap dapped end shall be designed to support the suspended span dead load in addition to the contributing dead load of the pier cap itself.
Counterweight poured monolithically with the box girder pier cap bottom slab and web walls.

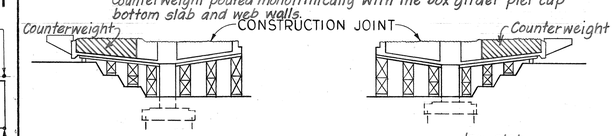

STAGE 3: Remove the web forms and place ~~the counterweight~~ concrete.

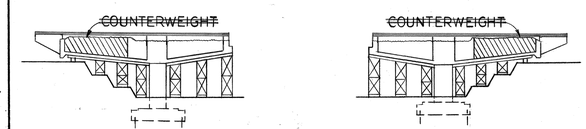

STAGE 4: Erect the suspended span beams and construct the diaphragms between the beams. Fill the dowel holes for the ~~beam bearings, as required & shown~~ on the plans.

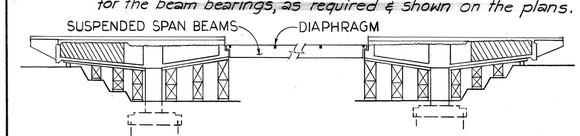

STAGE 5: Construct the top slab of ~~both the pier caps and~~ the suspended span. ~~Before placing the top slab of the pier cap, the counterweight concrete shall have attained a minimum compressive strength (cylinder strength) of 1,500 p.s.i.~~.

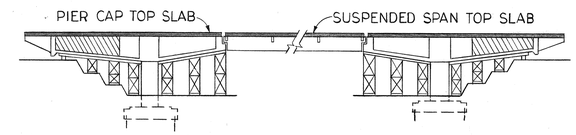

STAGE 6: Release the falsework and forms for the box piers 28 days after the casting of the pier cap top slab. Care shall be taken to release the falsework on both sides of any particular pier as evenly as possible, and also framework for both piers of the particular structure shall be released concurrently.

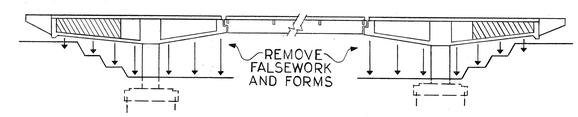

STAGE 7: Place the closure pour at the deck expansion joints & construct the parapets. Install the deck expansion joints. Finish the embankment below the structure and place the G.R.P. slope protection.

NOTE 'B':

All concrete pad elevations are based on steel laminated elastomeric bearing pads. If the contractor elects to use fiberglass laminated elastomeric pads instead of steel laminated elastomeric pads, he shall comply with the following requirements:

a. The fiberglass laminated bearing pads shall comply with the details shown on the plans and the requirements of the Special Provisions.
b. Appropriate revisions shall be made to the concrete pad elevations to reflect the reduction in thickness for the fiberglass laminated pads. Any such revisions shall be approved by the Engineer.

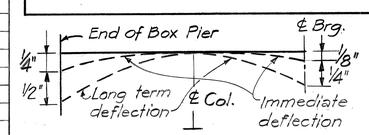

BOX GIRDER PIER
D.L. DEFLECTION DIAGRAM AT STAGE 6
N.T.S.

NOTE 'C': Camber Pier Cap for Long term deflection & Immediate deflection

JOHN P. JOHNSON
REGISTERED PROFESSIONAL ENGINEER
No. 3647
HAWAII, U.S.A.

THIS WORK WAS PREPARED BY ME OR UNDER MY SUPERVISION.

John P. Johnson

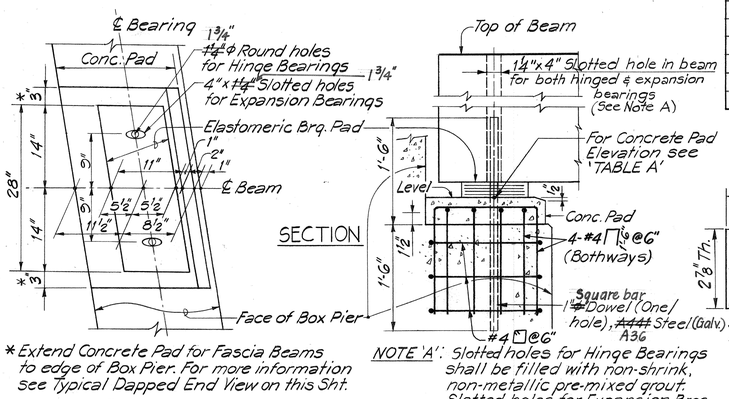

* Extend Concrete Pad for Fascia Beams to edge of Box Pier. For more information see Typical Dapped End View on this Sht.

NOTE 'A': Slotted holes for Hinge Bearings shall be filled with non-shrink, non-metallic pre-mixed grout. Slotted holes for Expansion Brgs. shall be filled with tar or mastic. The above work shall be done prior to placing deck slab concrete. (Incidental to Concrete in Bridges)

BEARING & CONCRETE PAD DETAILS
N.T.S.

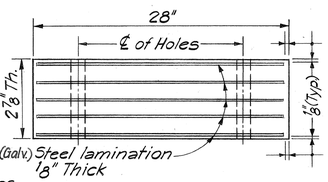

STEEL LAMINATED BEARING PAD
N.T.S.

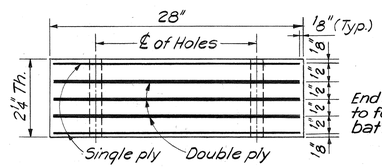

(See Note 'B')
FIBERGLASS LAMINATED BEARING PAD
(ALTERNATE)
N.T.S.

NOTE: Elastomeric Bearing Pads & Dowels shall be incidental to "Concrete in Bridges"

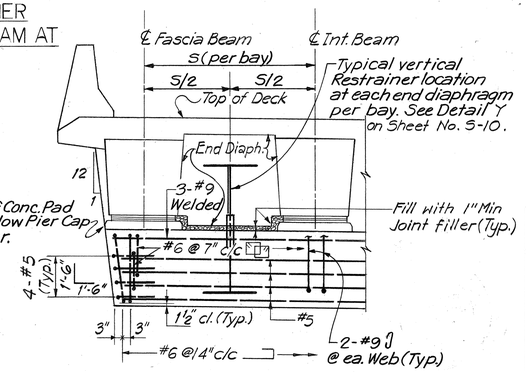

TYPICAL DAPPED END BEAM VIEW
SCALE: 3/8" = 1'-0"

STATE OF HAWAII
DEPARTMENT OF TRANSPORTATION
HIGHWAYS DIVISION

BOX PIER-SHEET 4 OF 4
GEOMETRY, BEARINGS AND CONSTRUCTION SEQUENCE

FORT WEAVER ROAD
ROUTE H-1 TO SOUTH OF
FARRINGTON HIGHWAY

SCALE: AS SHOWN DATE: AUG. 1978

SHEET No. S-7 OF S-16 SHEETS

ORIGINAL PLAN | SURVEY PLOTTED BY | DRAWN BY | TRACED BY | DESIGNED BY | QUANTITIES BY | CHECKED BY | DATE | NOTE BOOK | No.

FED. ROAD DIST. NO.	STATE	FED. AID PROJ. NO.	FISCAL YEAR	SHEET NO.	TOTAL SHEETS
HAWAII	HAW.	M-7600(1)	1978	139	198

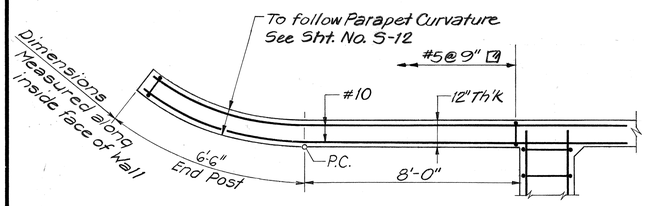

SECTION A-A
SCALE: 3/8"=1'-0"

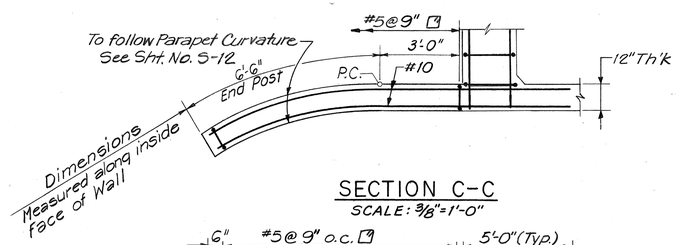

SECTION C-C
SCALE: 3/8"=1'-0"

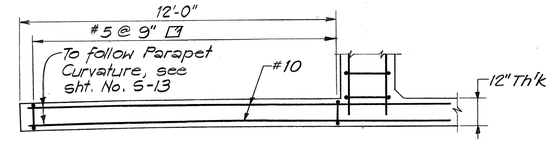

SECTION D-D
SCALE: 3/8"=1'-0"

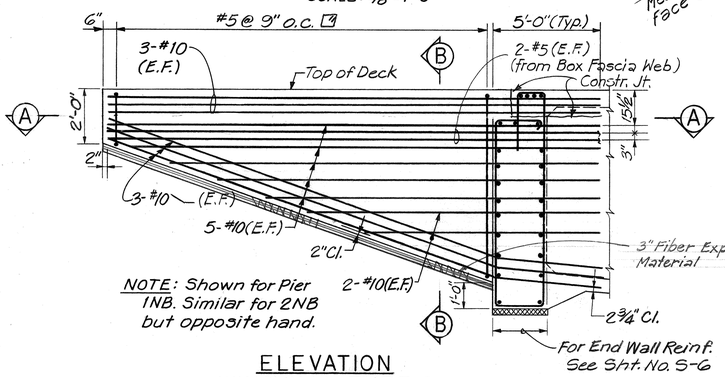

NOTE: Shown for Pier 1NB. Similar for 2NB but opposite hand.

ELEVATION
WINGWALL TYPE I
SCALE: 3/8"=1'-0"

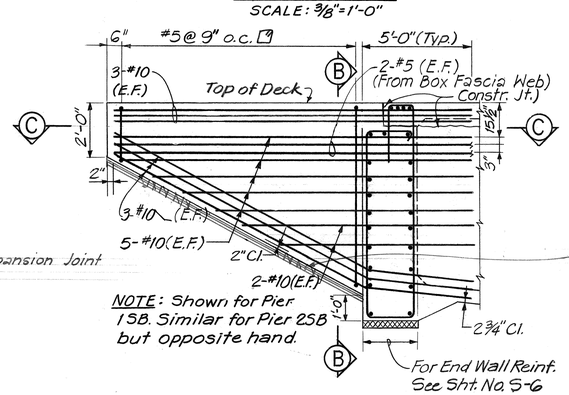

NOTE: Shown for Pier 1SB. Similar for Pier 2SB but opposite hand.

ELEVATION
WINGWALL TYPE II
SCALE: 3/8"=1'-0"

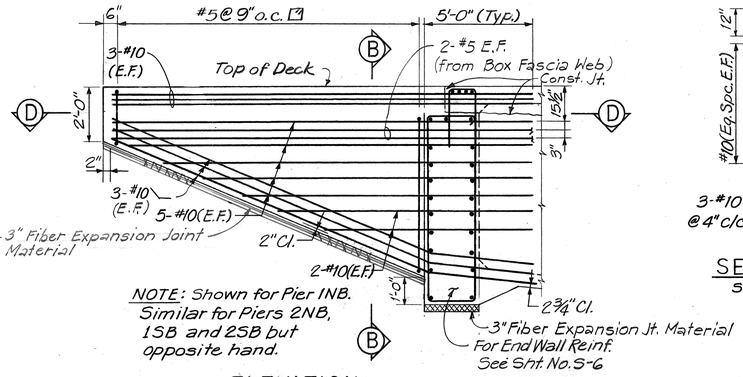

NOTE: Shown for Pier 1NB. Similar for Piers 2NB, 1SB and 2SB but opposite hand.

ELEVATION
WINGWALL TYPE III
SCALE: 3/8"=1'-0"

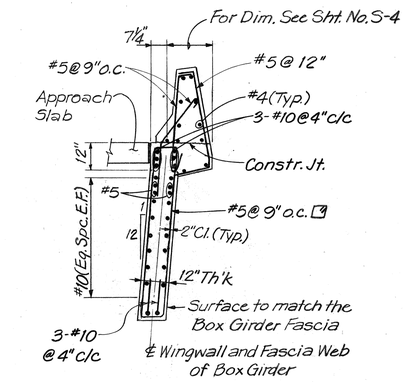

SECTION B-B
SCALE: 3/8"=1'-0"

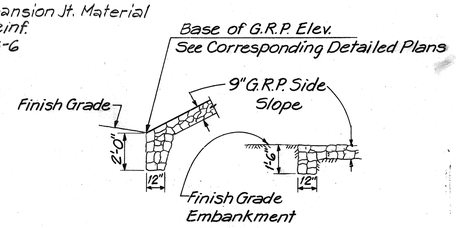

TYPICAL G.R.P. DETAILS
SCALE: 1/4"=1'-0"

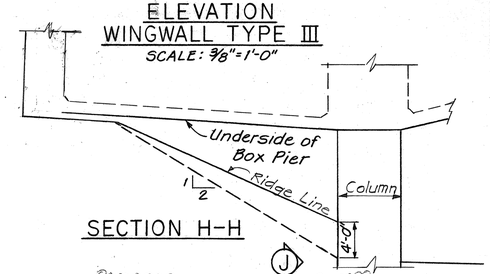

SECTION H-H

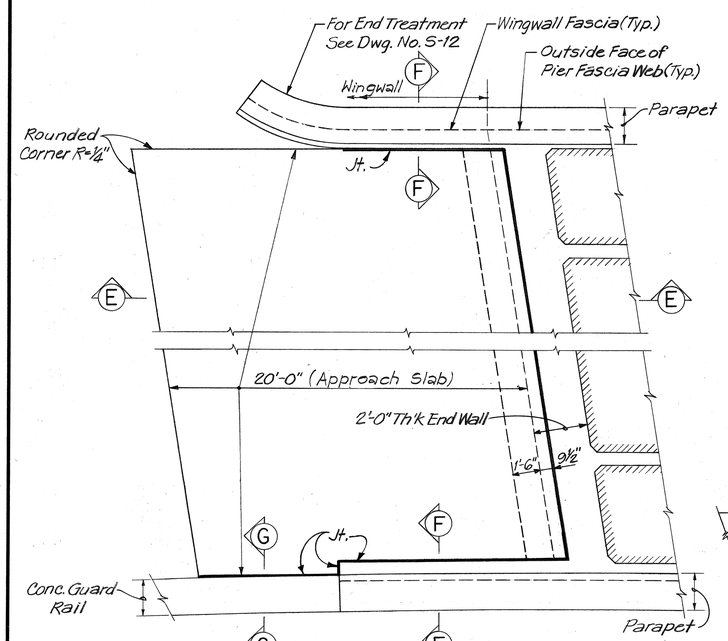

TYPICAL APPROACH SLAB
SCALE: 1/4" = 1'-0"

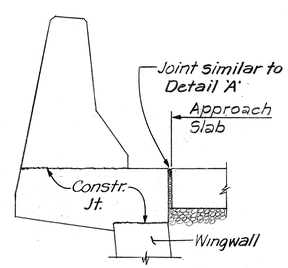

SECTION F-F
SCALE: 3/4"=1'-0"

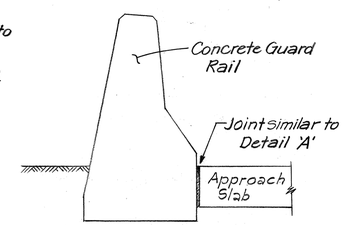

SECTION G-G
SCALE: 3/4"=1'-0"

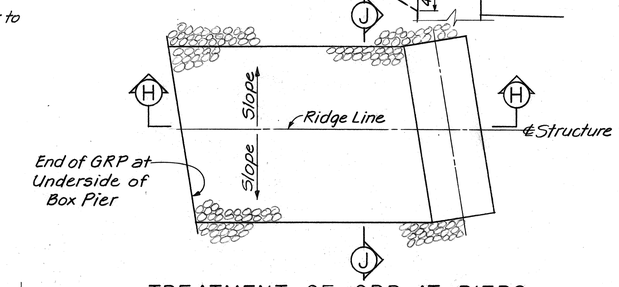

TREATMENT OF GRP AT PIERS
N.T.S.

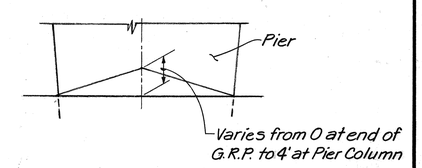

SECTION J-J
N.T.S.

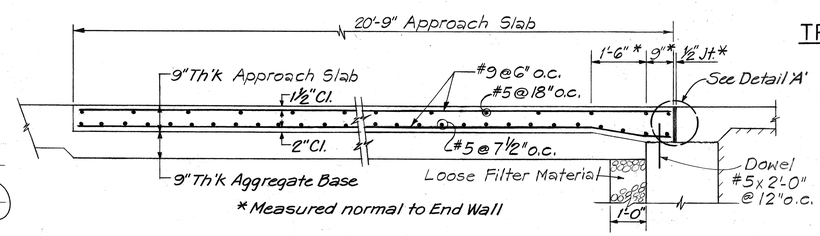

* Measured normal to End Wall

SECTION E-E
SCALE: 1/2"=1'-0"

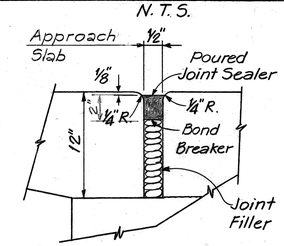

DETAIL A
N.T.S.

JOHN P. JOHNSON
REGISTERED PROFESSIONAL ENGINEER
No. 3647
HAWAII, U.S.A.

THIS WORK WAS PREPARED BY ME OR UNDER MY SUPERVISION.
John P. Johnson

STATE OF HAWAII
DEPARTMENT OF TRANSPORTATION
HIGHWAYS DIVISION

MISCELLANEOUS DETAILS

FORT WEAVER ROAD
ROUTE H-1 TO SOUTH OF
FARRINGTON HIGHWAY
PROJECT NO. M-7600(1)

SCALE: AS SHOWN DATE: AUG. 1978

SHEET No. S-8 OF S-16 SHEETS

ORIGINAL PLAN | SURVEY PLOTTED BY | DRAWN BY | TRACED BY | DESIGNED BY | QUANTITIES BY | CHECKED BY | DATE | NOTE BOOK | No.

FED. ROAD DIST. NO.	STATE	FED. AID PROJ. NO.	FISCAL YEAR	SHEET NO.	TOTAL SHEETS
HAWAII	HAW.	M-7600(1)	1978	140	198

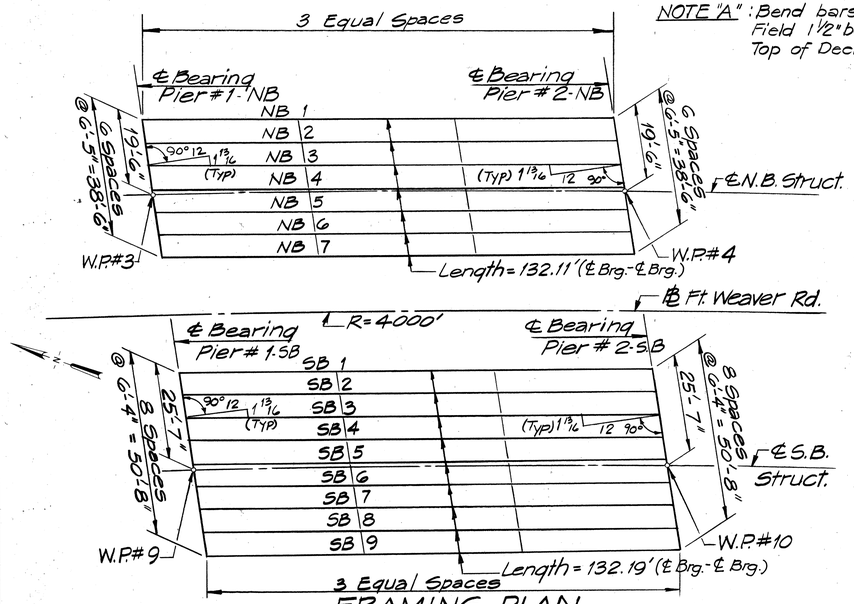

FRAMING PLAN
Scale: 1" = 20'-0"

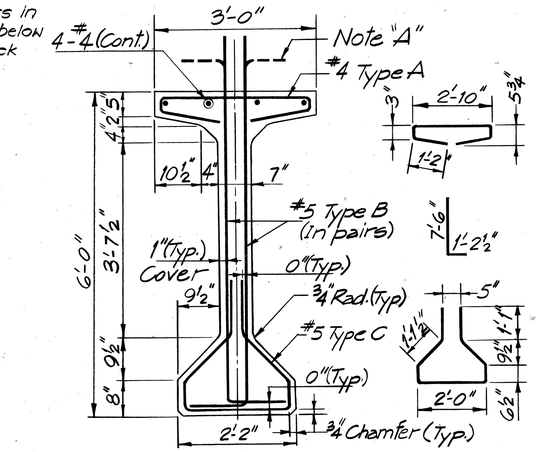

TYPICAL BEAM SECTION
Scale: ¾" = 1'-0"

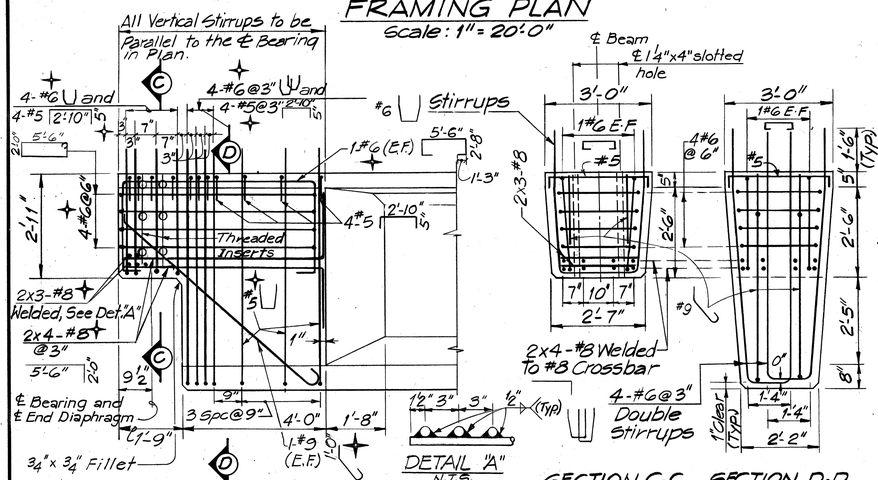

BEAM DAPPED END DETAIL
Scale: ½" = 1'-0"

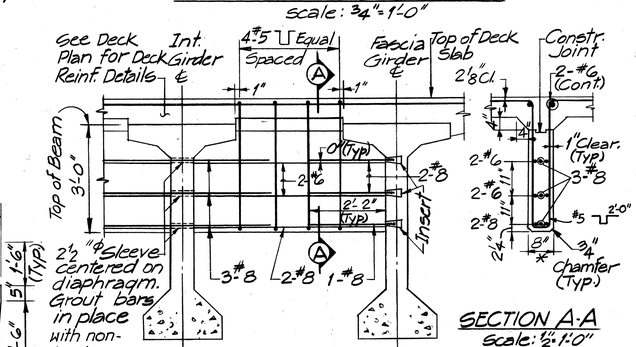

INTERMEDIATE DIAPHRAGM
(TYPICAL)
*Measured normal to ℄ Brg.

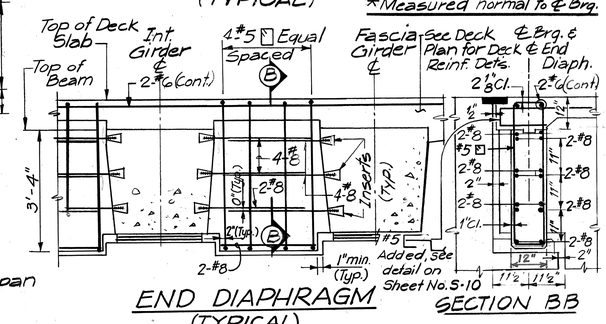

END DIAPHRAGM
(TYPICAL)
Scale: ½" = 1'-0"

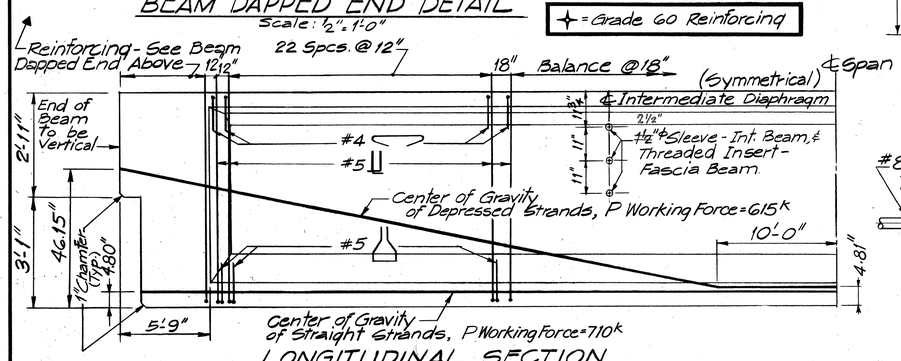

LONGITUDINAL SECTION
N.T.S.

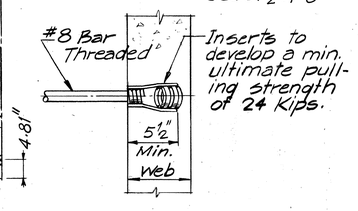

INSERT DETAIL
Scale: 1½" = 1'-0"

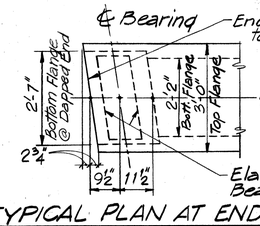

TYPICAL PLAN AT END OF BEAM
Scale: ½" = 1'-0"

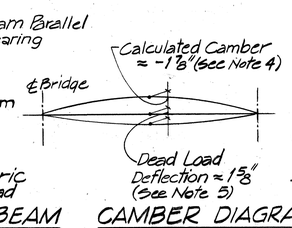

CAMBER DIAGRAM
N.T.S.

NOTES FOR PRESTRESSED BEAMS:

PRETENSIONING

1. Concrete shall have a minimum ultimate 28 day cylinder strength of 6,000 psi.
2. Pretensioned strands shall be 7 wire ½"φ stress-relieved steel strands (area = 0.153 in²) with an ultimate strength of 270 ksi. For properties see State Standard Specifications.
   Initial strand stress (before any losses): 200 ksi.; Initial loss = 20,000 psi.
   Total loss due to creep, shrinkage, elastic shortening and relaxation of steel = 45,000 psi.
   Minimum Ultimate Concrete Strength before release of strands f'_{ci} = 4,500 psi.
3. Non-prestressed reinforcing steel shall be Grade 40 unless otherwise noted.
4. The calculated camber includes the effect of the initial prestress force and the weight of the beam after removal from bed. Negative values shown for calculated camber indicate a net upward deflection. Calculated camber values shown do not account for any camber growth of the beam. The actual camber shall not exceed the calculated camber shown on the plans by more than 100%.
5. The dead load deflection includes the combined effects of the weight of slab, haunch and diaphragm.
6. Strand pattern shall be symmetrical about the longitudinal ℄ of the beam.
7. Strand release sequence shall not induce any lateral deflection of the beam.
8. Contractor shall submit his proposed strand pattern and releasing sequence to the Engineer for approval.
9. During curing care shall be taken to avoid any lateral deflection of the beam due to improper orientation.
10. Lifting devices shall be placed as close as possible to the center line of bearings of the beam. Details and locations of lifting devices shall be submitted to the Engineer for approval. Such approval does not relieve the Contractor of his responsibilities if beam is damaged due to failure of the lifting device.
11. In lieu of the 7 wire ½" dia. stress-relieved steel strands (area 0.153 in²) with an ultimate strength of 270 ksi, the Contractor at his option may use 7 wire 0.6" dia. stress-relieved steel strands (area 0.217 in²) with an ultimate strength of 270 ksi. For properties of 0.6" dia. strand see special provisions. However the final prestress force and its center of gravity, as stated, shall not be revised.
12. End block is required for both pretensioned or post-tensioned beams.

POST-TENSIONING

(Contractor's Option for Long Beams)

a. The ultimate 28-day cylinder strength of concrete shall be a minimum of 6,000 psi.
b. Post-tensioning steel shall consist of either ½"φ, 270 ksi S/R multistrand tendons or high strength alloy steel bars. Sheathing shall be galvanized rigid duct (coef. of friction μ = 0.25 and wobble coef. K = 0.0002) for strands and galvanized metal sheathing (μ = 0.15 and k = 0.0002) for bars. Friction losses shall be verified by friction test as per State Standard Specs.
c. Loss due to creep, shrinkage, elastic shortening and relaxation of steel to be assumed = 35,000 psi.
d. Contractor shall submit the post-tensioned beam design including elongation, jacking and deflection computation to Engineer for approval. Estimate of losses (apart from that listed above) peculiar to post-tensioning shall be part of the calculations.
e. Contractor shall submit the tendon pattern and profile, sequence of stressing and anchorage details to Engineer for approval. Tendons location and post-tensioning shall be symmetrical about the longitudinal ℄ of the beam.
f. Pretensioning notes 3, 9 and 10 also apply to post-tensioning.

JOHN P. JOHNSON
REGISTERED PROFESSIONAL ENGINEER
No. 3647
HAWAII, U.S.A.

THIS WORK WAS PREPARED BY ME OR UNDER MY SUPERVISION.
John P. Johnson

STATE OF HAWAII
DEPARTMENT OF TRANSPORTATION
HIGHWAYS DIVISION

PRESTRESSED BEAM DETAILS

FORT WEAVER ROAD
ROUTE H-1 TO SOUTH OF
FARRINGTON HIGHWAY
PROJECT NO. M-7600(1)

SCALE: AS SHOWN DATE: AUG. 1978

SHEET No. S-9 OF S-16 SHEETS

ORIGINAL PLAN | SURVEY PLOTTED BY | DRAWN BY | TRACED BY | DESIGNED BY | NOTE BOOK | QUANTITIES BY | CHECKED BY | DATE | No.

FED. ROAD DIST. NO.	STATE	FED. AID PROJ. NO.	FISCAL YEAR	SHEET NO.	TOTAL SHEETS
HAWAII	HAW.	M-7600(1)	1978	141	198

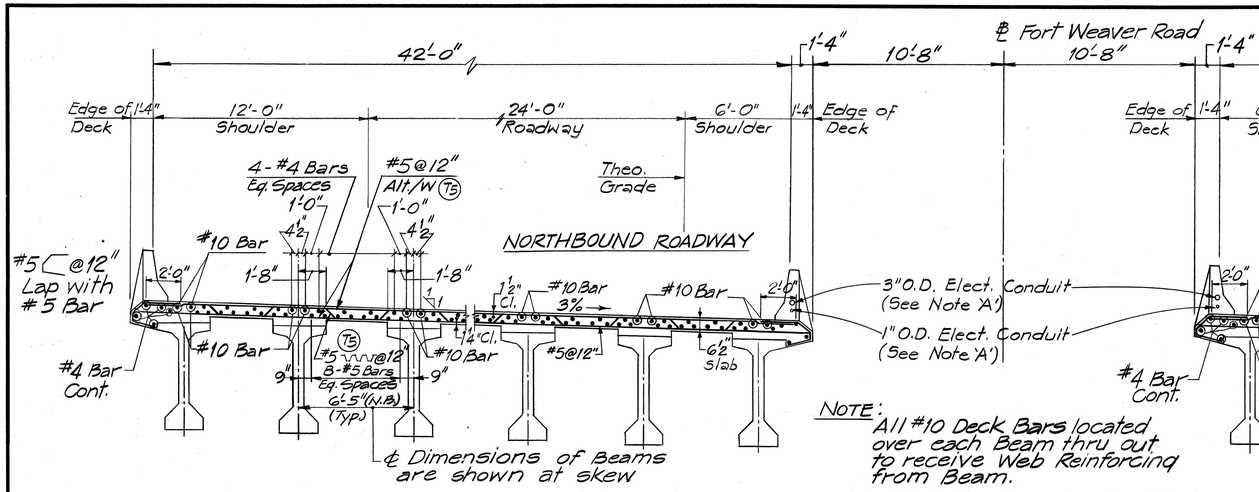

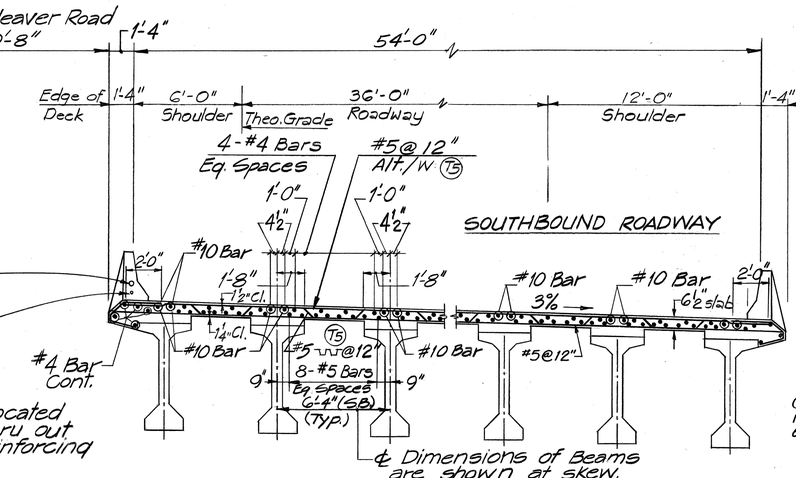

NOTE: All #10 Deck Bars located over each Beam thru out to receive Web Reinforcing from Beam.

TYPICAL DECK SECTIONS
N.T.S.

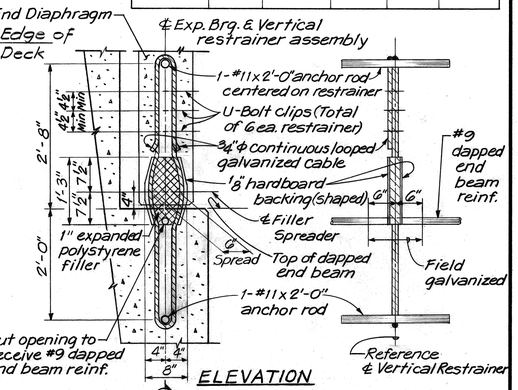

DETAIL Y
TYPICAL VERTICAL RESTRAINER DETAILS AT EXPANSION BEARING
SCALE: ¾"=1'-0"

NOTE 'A': Elec. conduits located in interior Parapets only. For locations and conduit entrance details see Electrical Plans.

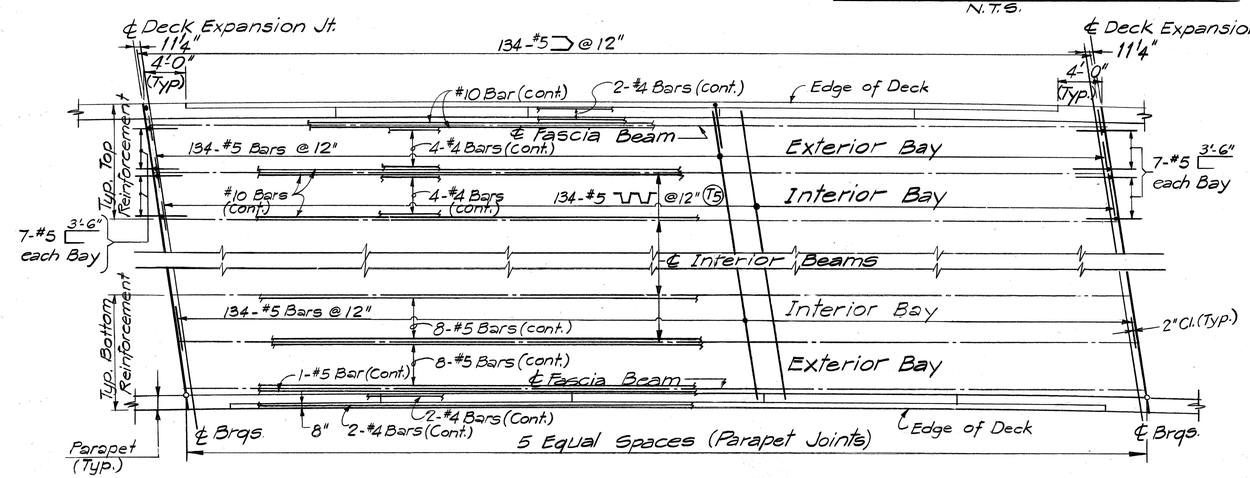

TYPICAL SUSPENDED SPAN DECK SLAB REINFORCEMENT
Scale: 1"=10'-0"

NOTE: Splices of longitudinal reinforcements shall be staggered.

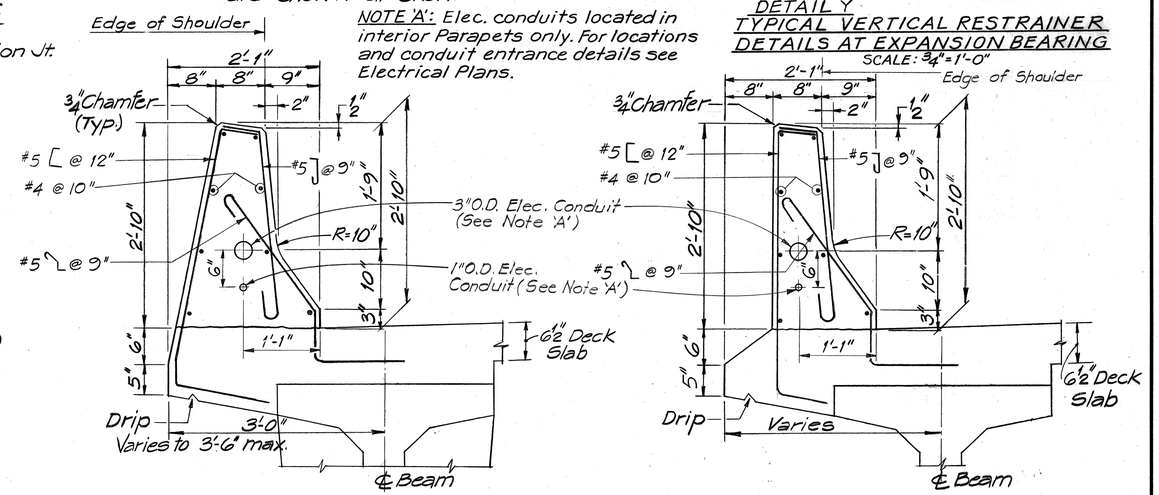

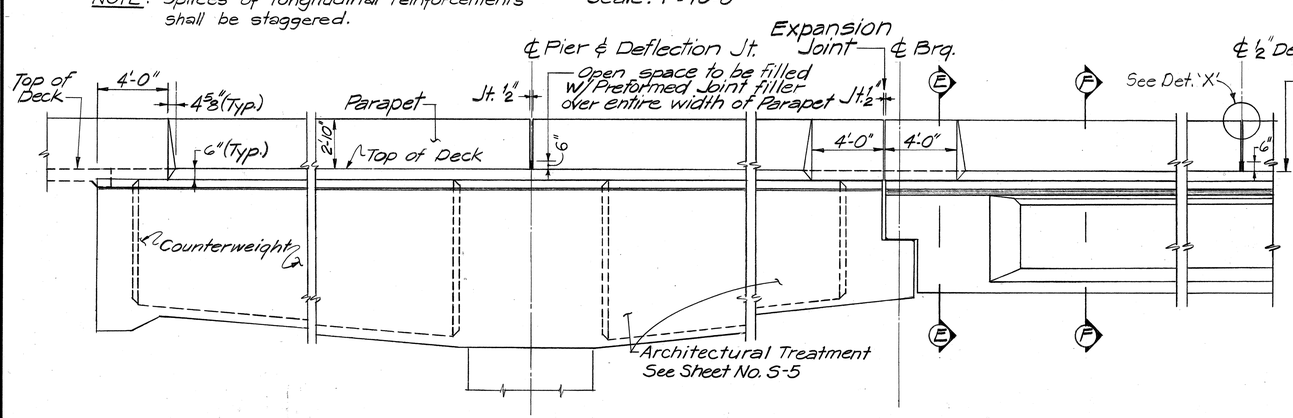

TYPICAL PARAPET ELEVATION & PORTION OF HAMMERHEAD-FASCIA BEAM
Scale: ¼"=1'-0"

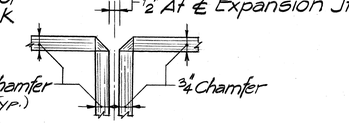

DETAIL 'X'
Scale: 3"=1'-0"

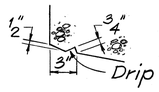

DRIP DETAIL

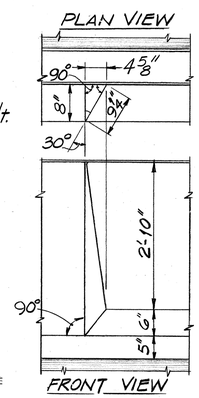

PARAPET RECESS PANEL DETAIL
Scale: ¾"=1'-0"

NOTES:
1. Restrainer assemblage incidental to concrete & will not be paid for separately.
2. Restrainer assemblage shall be securely held in place while placing concrete.
3. Concrete in suspended deck slab (excluding diaphragms and parapets) shall be Class BD.

JOHN P. JOHNSON REGISTERED PROFESSIONAL ENGINEER No. 3647 HAWAII, U.S.A.

THIS WORK WAS PREPARED BY ME OR UNDER MY SUPERVISION.
John P. Johnson

STATE OF HAWAII
DEPARTMENT OF TRANSPORTATION
HIGHWAYS DIVISION

DECK REINFORCEMENT AND PARAPET DETAILS

FORT WEAVER ROAD
ROUTE H-1 TO SOUTH OF FARRINGTON HIGHWAY
PROJECT NO. M-7600(1)

SCALE: AS SHOWN DATE: AUG. 1978

SHEET No. S-10 OF S-16 SHEETS

ORIGINAL PLAN | SURVEY PLOTTED BY | DRAWN BY | TRACED BY | DESIGNED BY | QUANTITIES BY | CHECKED BY | DATE | NOTE BOOK | No.

FED. ROAD DIST. NO.	STATE	FED. AID PROJ. NO.	FISCAL YEAR	SHEET NO.	TOTAL SHEETS
HAWAII	HAW.	M-7600(1)	1978	142	198

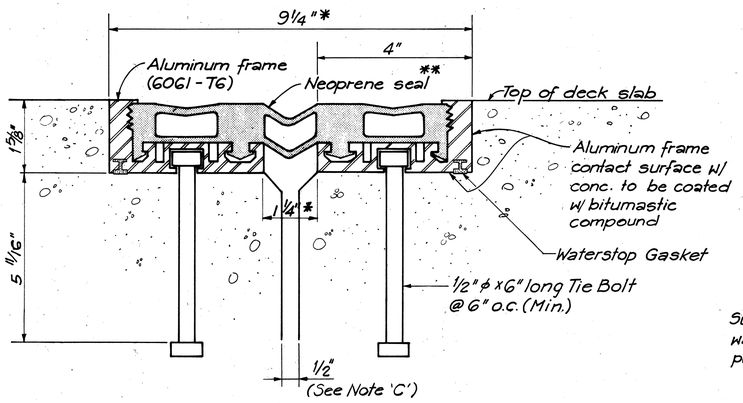

DELASTIFLEX TYPE SM200

(Manufacturer: D.S. Brown & Co.)

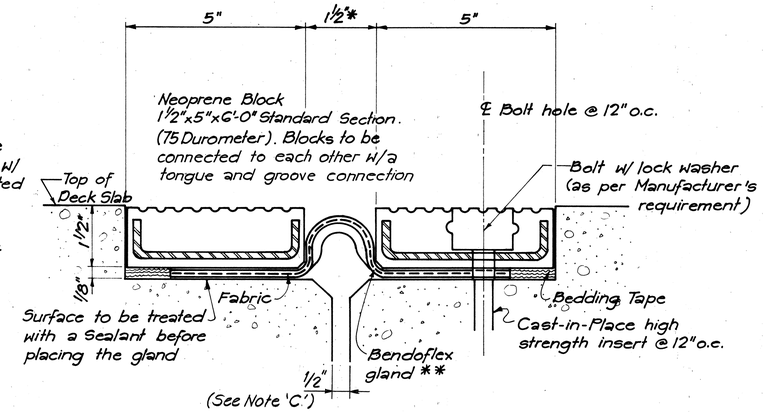

WABO BENDOFLEX SYSTEM

(Manufacturer: Watson Bowman Ass. Inc.)

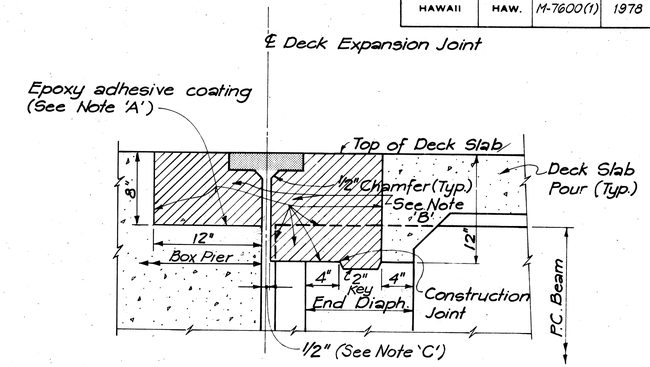

TYPICAL DECK SECTION

Scale: 1 1/2" = 1'-0"

* = Installation width @ 75°F

** = Seal/Gland shall be continuous across the full width of the Structure

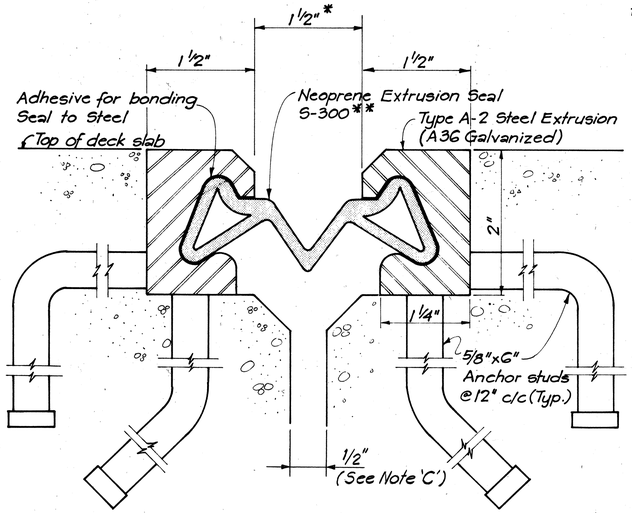

WABO-MAURER STRIP SEAL

(Manufacturer: Watson - Bowman Ass. Inc.)

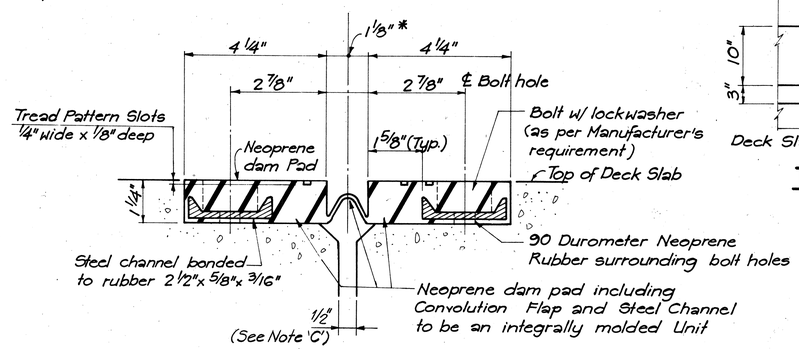

FEL-SPAN TYPE T-20

(Manufacturer: FEL-PRO Incorporated)

NOTE: The entire assembly to be factory vulcanized into 8'-0" (Min.) long units before shipping. The convolution flap between units to be lapped and field vulcanized.

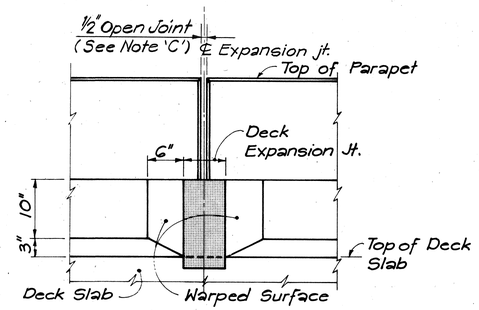

TYPICAL ELEVATION

N.T.S.

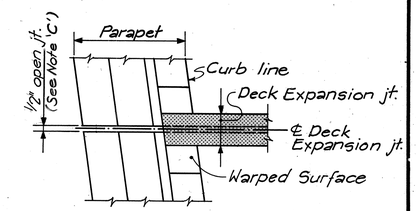

TYPICAL PLAN

N.T.S.

NOTES:

1. Four alternative Deck Expansion Joint Systems are shown. Contractor has the option of selecting any one of the systems. The Contractor shall submit detailed shop drawings of the selected joint to the Engineer for approval.
2. The Contractor also has the option of using an alternative Deck Expansion Joint system provided it complies with the requirements of the plans and specifications.

NOTE 'A': Just prior to concreting of the hatched areas, coat the indicated surfaces with an epoxy adhesive. (See Special provision Sec. 705.16)

NOTE 'B': Hatched Areas shall be concreted after 28 days of deck slab pour. Anchor devices shall be located and held in their final position, as per Manufacturer's requirement, during the concreting of the hatched areas.

NOTE 'C': Joint opening at time of Installation of joint. Joint to be formed by Premolded filler.

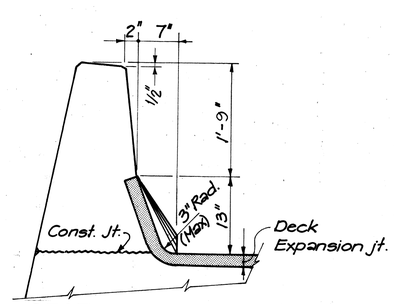

TYPICAL SECTION AT STANDARD PARAPET

N.T.S.

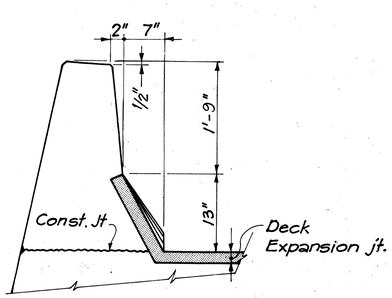

ALTERNATE DETAIL AT PARAPET

N.T.S.

JOHN P. JOHNSON REGISTERED PROFESSIONAL ENGINEER No. 3647 HAWAII, U.S.A.

THIS WORK WAS PREPARED BY ME OR UNDER MY SUPERVISION.

John P. Johnson

STATE OF HAWAII
DEPARTMENT OF TRANSPORTATION
HIGHWAYS DIVISION

DECK EXPANSION JOINT

FORT WEAVER ROAD
ROUTE H-1 TO SOUTH OF
FARRINGTON HIGHWAY
PROJECT NO. M-7600(1)

SCALE: NONE DATE: AUG. 1978

SHEET No. S-11 OF S-16 SHEETS

ORIGINAL PLAN | SURVEY PLOTTED BY | DRAWN BY | TRACED BY | DESIGNED BY | QUANTITIES BY | CHECKED BY | DATE | NOTE BOOK | NO.

FED. ROAD DIST. NO.	STATE	FED. AID PROJ. NO.	FISCAL YEAR	SHEET NO.	TOTAL SHEETS
HAWAII	HAW.	M-7600(1)	1978	143	198

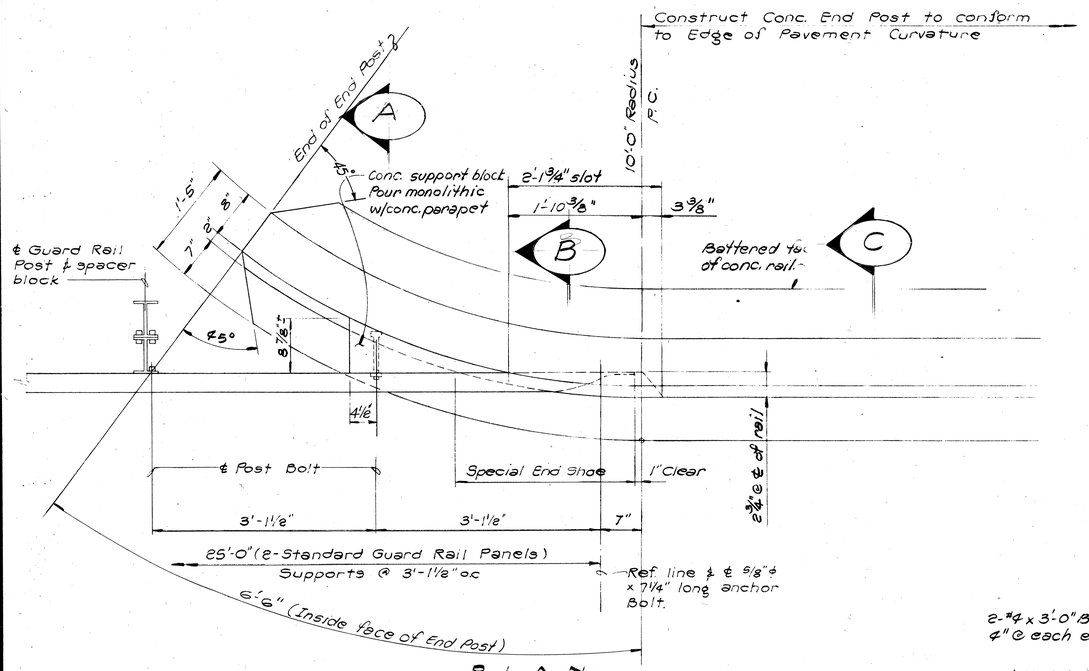

PLAN
Scale: 1" = 1'-0"

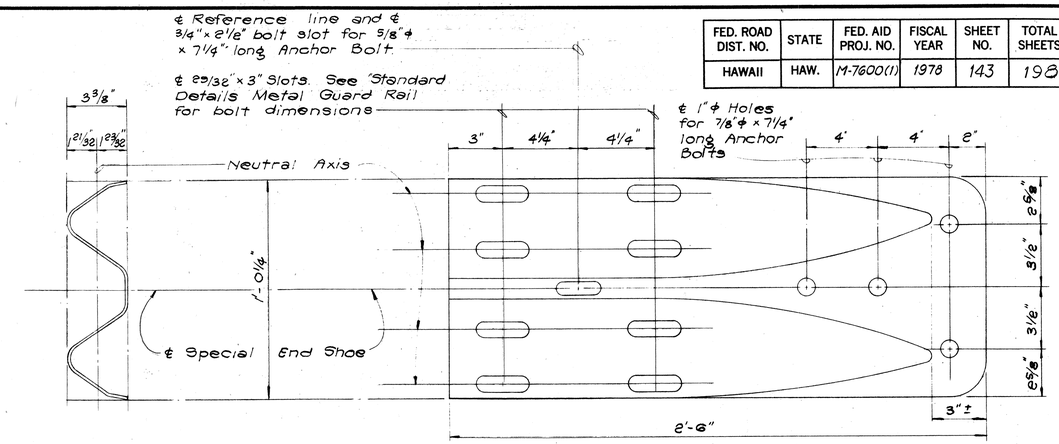

SECTION ELEVATION

SPECIAL END SHOE DETAILS
Scale: 3" = 1'-0"

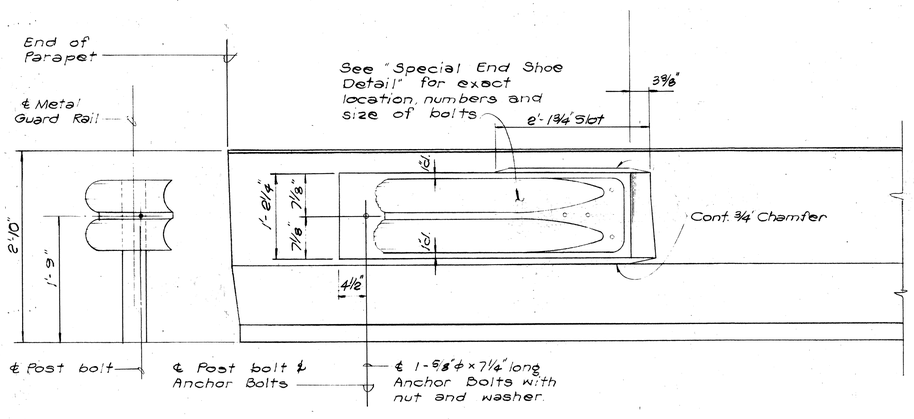

ELEVATION
Scale: 1" = 1'-0"

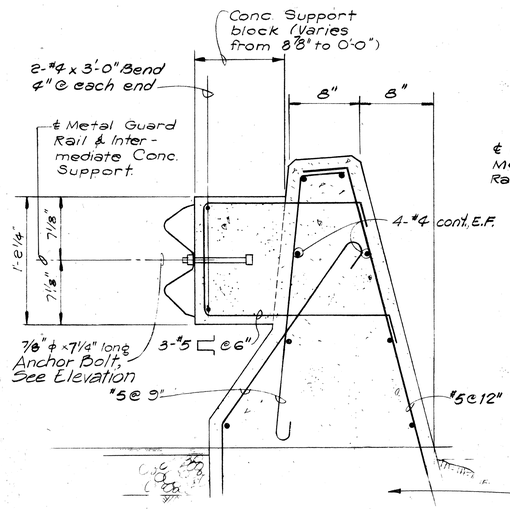

SECTION A
Scale: 1 1/2" = 1'-0"

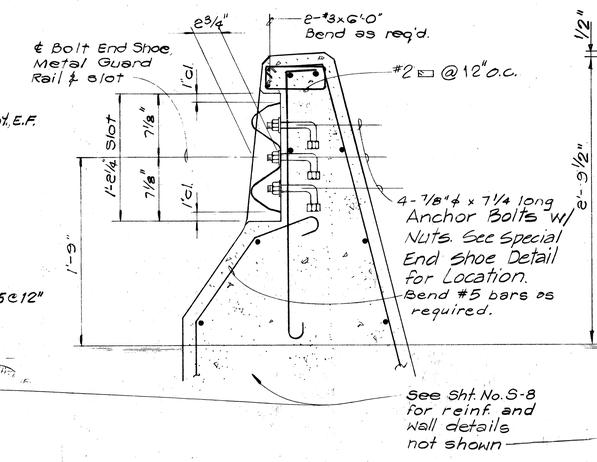

SECTION B
Scale: 1 1/2" = 1'-0"

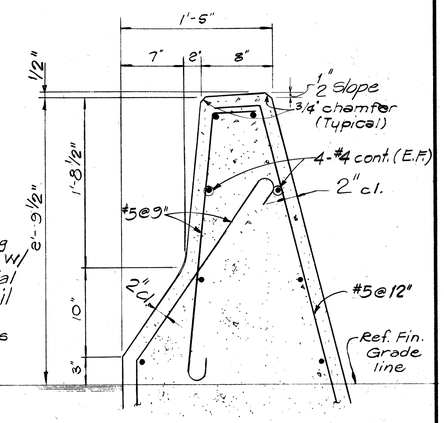

SECTION C
Scale: 1 1/2" = 1'-0"

NOTES:

1. All Anchor Bolts shall be High Strength bolts conforming to the requirements of ASTM A325
2. All Shoe assembly, including anchor bolts, nuts and washers shall be galvanized.
3. Special End Shoe shall be fabricated from 10 gage steel conforming to the requirements of AASHO 180.
4. First 25'-0" of guard rail adjoining "Special End Shoe" shall be galvanized steel.
5. Anchor Bolt length given from under bolt head
6. Front face of End Post to match front face of typical concrete parapet.

ORIGINAL PLAN	
	SURVEY PLOTTED BY
	DRAWN BY
	TRACED BY
NOTE BOOK	DESIGNED BY
	QUANTITIES BY
No.	CHECKED BY

DATE

JOHN P. JOHNSON
REGISTERED PROFESSIONAL ENGINEER
No. 3647
HAWAII, U.S.A.

THIS WORK WAS PREPARED BY ME OR UNDER MY SUPERVISION.

John P. Johnson

STATE OF HAWAII
DEPARTMENT OF TRANSPORTATION
HIGHWAYS DIVISION

TYPICAL END POST DETAIL

FORT WEAVER ROAD
ROUTE H-1 TO SOUTH OF
FARRINGTON HIGHWAY
PROJECT NO. M-7600(1)

SCALE: AS SHOWN DATE: AUG. 1978

SHEET No. S-12 OF S-16 SHEETS

DATE	REVISION
7-10-80	Added additional Reinf. Bar in Concrete Guardrail and revised the note. Provided Baseline Offsets for the Concrete Guardrail Taper Sections.

FED. ROAD DIST. NO.	STATE	FED. AID PROJ. NO.	FISCAL YEAR	SHEET NO.	TOTAL SHEETS
HAWAII	HAW.	M-7600(1)	1978	144	198

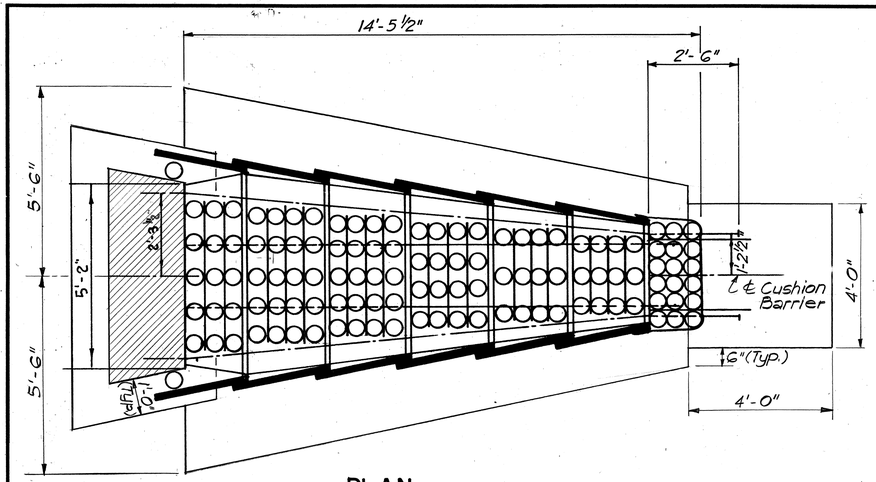

PLAN
SCALE: 1/2" = 1'-0"

NOTE: Footings and Pad for Cushion Barriers shall be of Class A Concrete (Incidental to Item "Cushion Barrier" paid in Roadway Item)

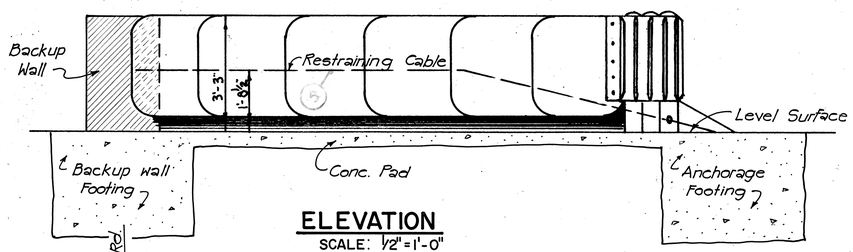

ELEVATION
SCALE: 1/2" = 1'-0"

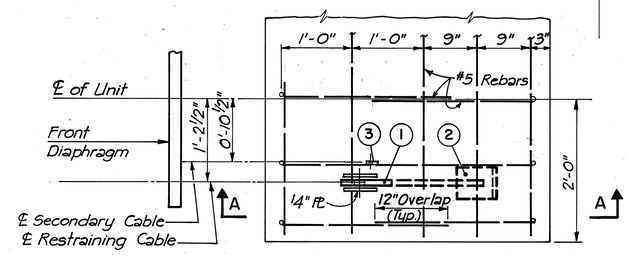

TOP VIEW
SCALE: 1" = 1'-0"

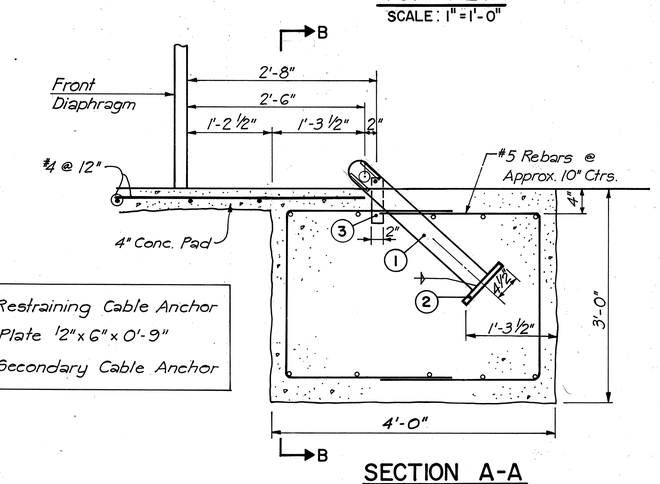

1. Restraining Cable Anchor
2. Plate 1/2" x 6" x 0'-9"
3. Secondary Cable Anchor

SECTION A-A
SCALE: 1" = 1'-0"

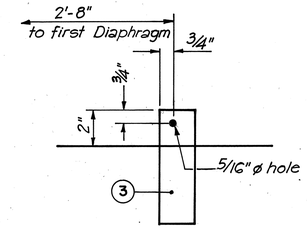

DETAIL A
SCALE: 3" = 1'-0"

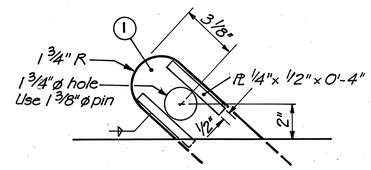

DETAIL B
SCALE: 3" = 1'-0"

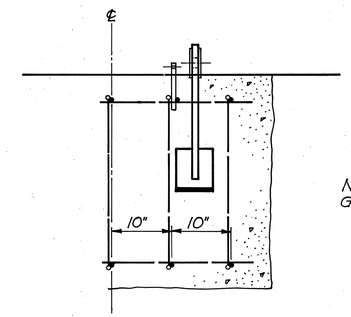

SECTION B-B
SCALE: 1" = 1'-0"

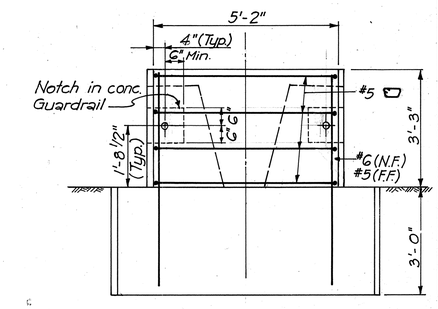

ELEVATION

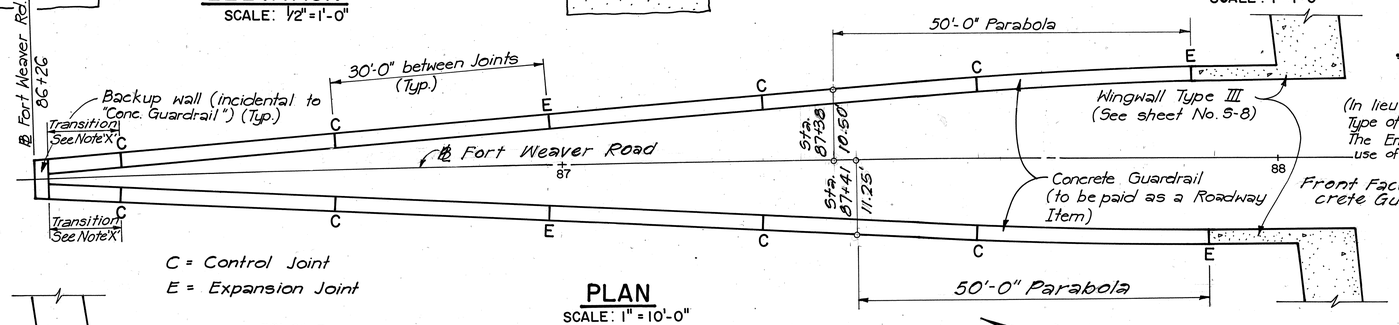

C = Control Joint

E = Expansion Joint

PLAN
SCALE: 1" = 10'-0"

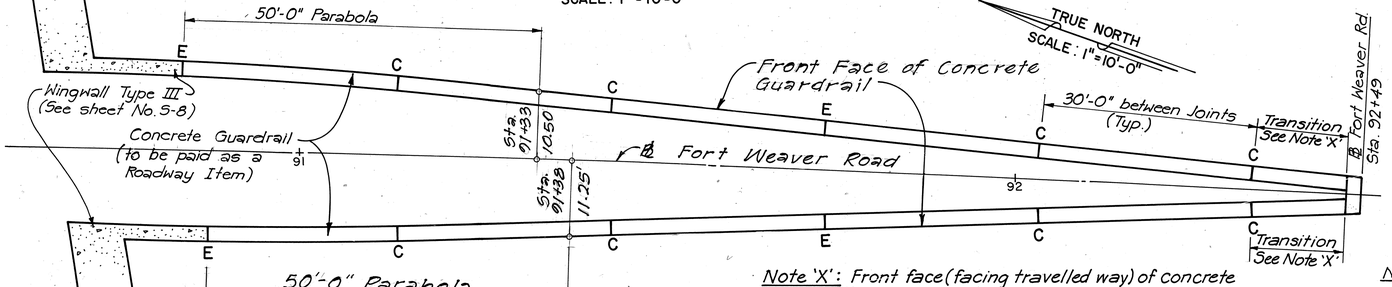

TRUE NORTH
SCALE: 1" = 10'-0"

PLAN
SCALE: 1" = 10'-0"

Note 'X': Front face (facing travelled way) of concrete guard rail shall have a transition from normal sloping face to the vertical face of backup wall.

FRONT CABLE ANCHORAGE
IMBEDDED TYPE A

(In lieu of the imbedded type of Cable Anchorage Plate Type of Anchorage may be used, subject to the approval of The Engineer. Expansion Bolts will not be permitted with the use of Plate Type Anchorage)

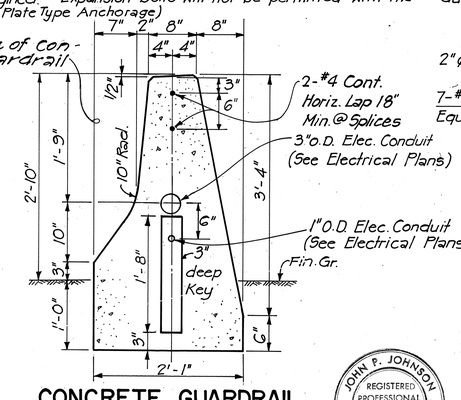

CONCRETE GUARDRAIL
SCALE: 1" = 1'-0"

NOTE: For Details of Concrete Guardrail Expansion and Control Joints, see Plan Sheet No. C.O. 147.

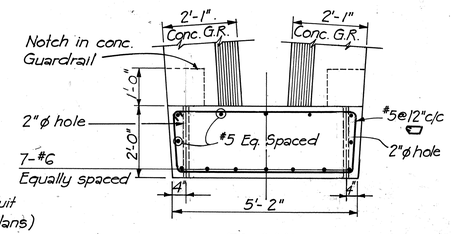

PLAN

CONCRETE BACKUP WALL
SCALE: 1/2" = 1'-0"

JOHN P. JOHNSON
REGISTERED PROFESSIONAL ENGINEER
No. 3647
HAWAII, U.S.A.

THIS WORK WAS PREPARED BY ME OR UNDER MY SUPERVISION.

John P. Johnson

STATE OF HAWAII
DEPARTMENT OF TRANSPORTATION
HIGHWAYS DIVISION

CUSHION BARRIER DETAILS

FORT WEAVER ROAD
ROUTE H-1 TO SOUTH OF FARRINGTON HIGHWAY
PROJECT NO. M-7600(1)

SCALE: AS SHOWN DATE: AUG. 1978

SHEET No. S-13 OF S-16 SHEETS

ORIGINAL PLAN	SURVEY PLOTTED BY	DATE
	DRAWN BY	
	TRACED BY	
NOTE BOOK	DESIGNED BY	
	QUANTITIES BY	
No.	CHECKED BY	

C.O. 144

FED. ROAD DIST. NO.	STATE	FED. AID PROJ. NO.	FISCAL YEAR	SHEET NO.	TOTAL SHEETS
HAWAII	HAW.	M-7600(1)	1978	145	198

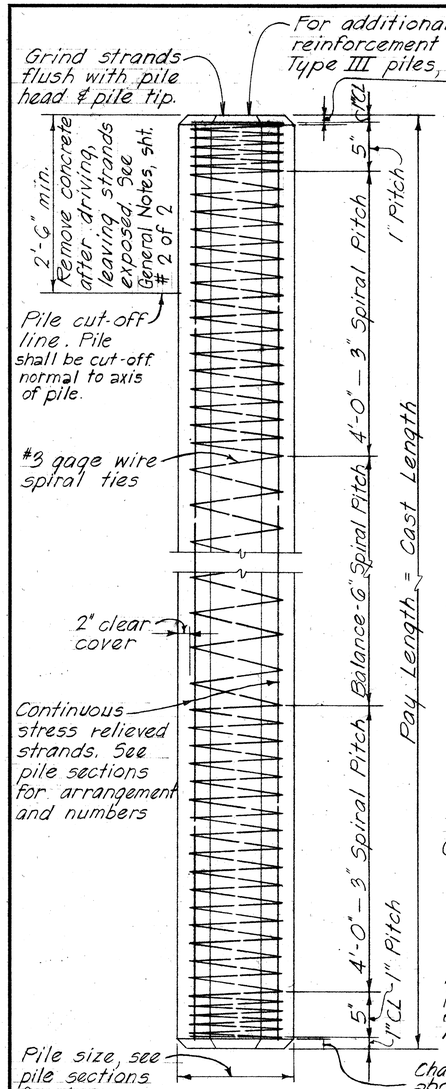

TYPICAL PILE DETAIL

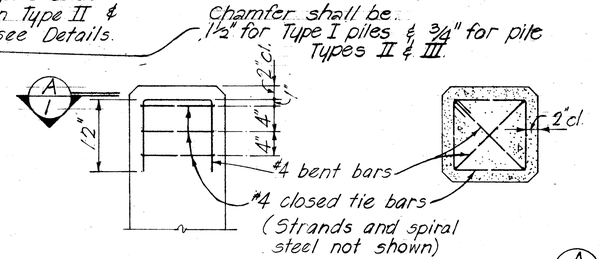

PART ELEVATION SECTION A/1

TYPICAL ADDED REINFORCEMENT PILE ENDS - TYPE II & III ONLY

NOTE: Concrete in pile build-ups without driving shall be Class A Concrete. Concrete in pile build-ups with driving shall have a minimum compressive cylinder strength f'c' of 5000 p.s.i. at 28 days. Build-ups may be driven if the specimen of concrete from which the piles were poured develops a strength of at least 3500 p.s.i. but not earlier than 7 days.

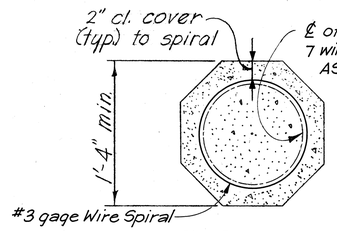

TYPE I

Note: All types of pile spiral reinforcement shall be cold drawn steel wire, ASTM A 82

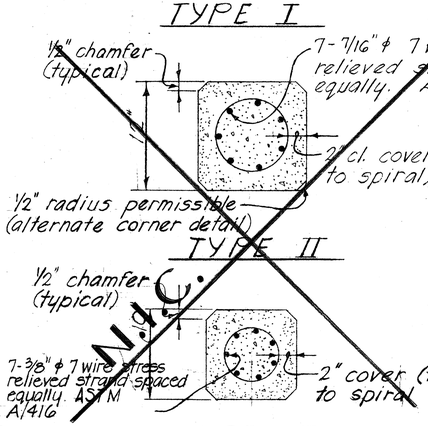

TYPE II

TYPE III

TYPICAL SECTIONS THRU PILES

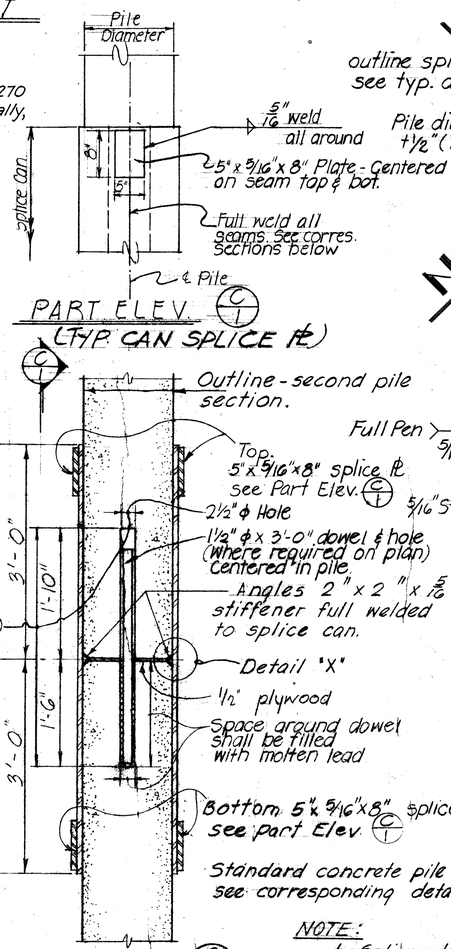

PART ELEV. C/1 (TYP. CAN SPLICE ℞)

SECTION B/1

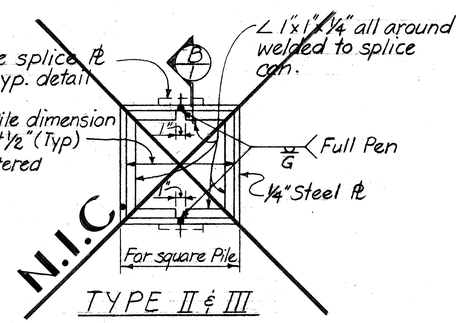

TYPE II & III

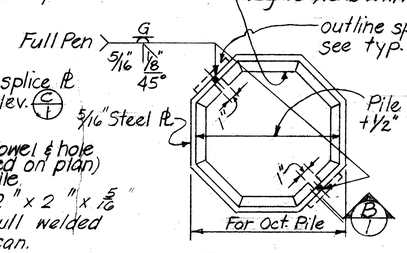

TYPE I

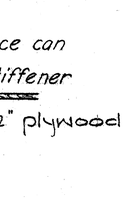

DETAIL 'X'

NOTE:
1. Splice detail shown above shall not be used except for pile length in excess of 100'-0" long.
2. Structural steel for splice can shall be ASTM A36.

TYPICAL PILE SPLICE DETAILS (FOR PRESTRESSED CONCRETE PILES WHEN CAST IN TWO OR MORE SECTIONS)

NOTE: All welding shall conform to the Specifications for "Welded Highway and Railway Bridges" of the American Welding Society.

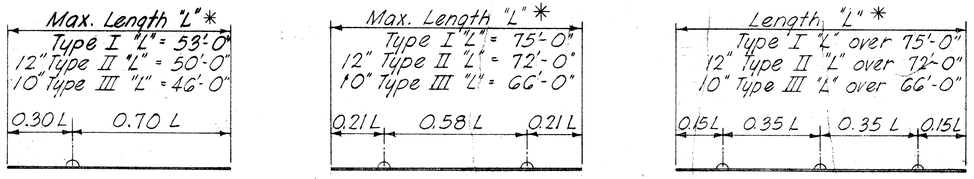

*The length "L" is the distance end to end of pile.

1 POINT PICK-UP 2 POINT PICK-UP 3 POINT PICK-UP

NOTE: Unless special lifting devices are attached for pick-up points, pick-up points shall be plainly marked on all piles after removal of the forms and all lifting shall be done at these points.
The use of special embedded or attached lifting devices, the employment of other pick-up points or any other method of pick-up shall be subject to approval by the Engineer.

ORIGINAL PLAN	SURVEY PLOTTED BY	DATE
	DRAWN BY	
	TRACED BY	
NOTE BOOK	DESIGNED BY	
No.	QUANTITIES BY	
	CHECKED BY	

JOHN P. JOHNSON REGISTERED PROFESSIONAL ENGINEER No. 3647 HAWAII, U.S.A.

THIS WORK WAS PREPARED BY ME OR UNDER MY SUPERVISION AND CONSTRUCTION OF THIS PROJECT WILL BE UNDER MY SUPERVISION.

John P. Johnson

STATE OF HAWAII
DEPARTMENT OF TRANSPORTATION
HIGHWAYS DIVISION

PRESTRESSED CONCRETE PILES DETAILS

FORT WEAVER ROAD
ROUTE H-1 TO SOUTH OF FARRINGTON HIGHWAY
PROJECT NO. M-7600(1)

SCALE: NONE DATE: AUG. 1978

SHEET No. S-14 OF S-16 SHEETS

FED. ROAD DIST. NO.	STATE	FED. AID PROJ. NO.	FISCAL YEAR	SHEET NO.	TOTAL SHEETS
HAWAII	HAW.	M-7600(1)	1978	146	198

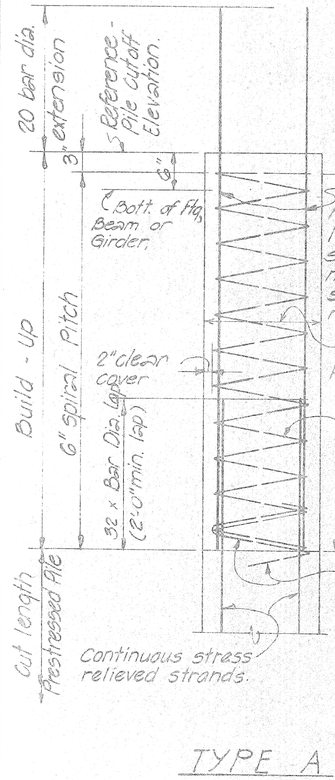

The minimum area of reinforcing steel shall be 1½% of the gross cross-section of concrete. Placement of bars shall be in a symmetrical pattern of not less than four bars.

Built-up section same as prestress pile below.

#3 gage wire spiral ties

Concrete around top edge of pile shall be bushhammered to prevent feather edges.

Clean and extend existing spiral a minimum of one turn into build-up above and lap with spiral tie.

TYPE A

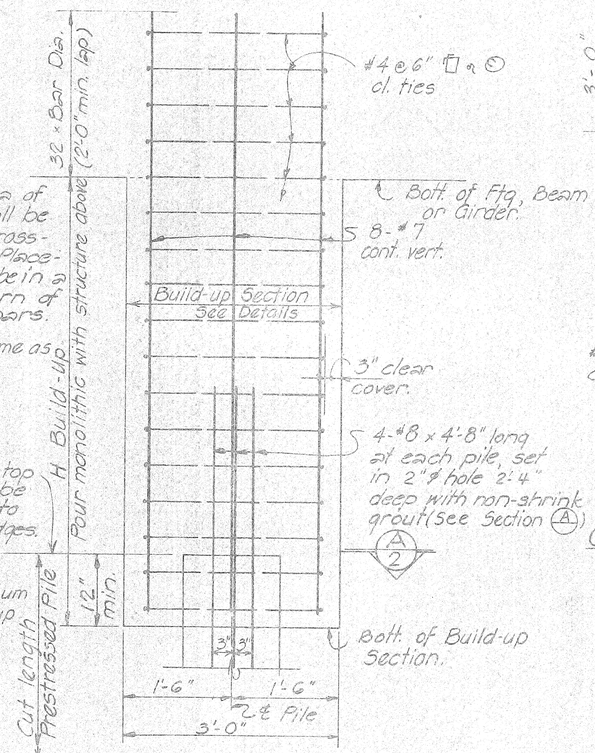

TYPE B

Notes:

Selection of pile build-up type without driving to be determined by the Engineer.

When height of depressed portion of footing (H) exceeds 4", the depressed section shall be poured separately from the main body of the footing.

Depressed portion of footing may be omitted for pile heads embedded at least 4" into footing provided at least 90% of the piles in each footing have the minimum embedment into footing as shown in contract plans.

WITHOUT DRIVING
TYPICAL PILE BUILD-UP DETAILS

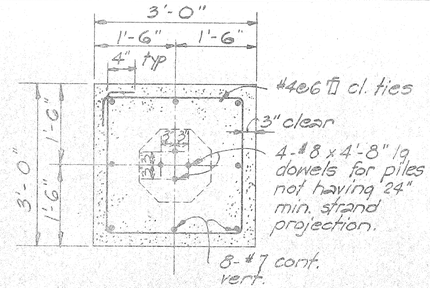

SQUARE BUILD-UP

Note:

Circular section may be used instead of square section if approved by the Engineer.

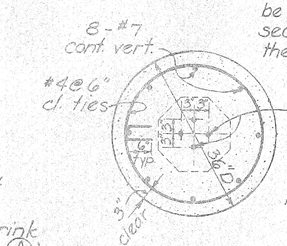

CIRCULAR BUILD-UP SECTION A/2

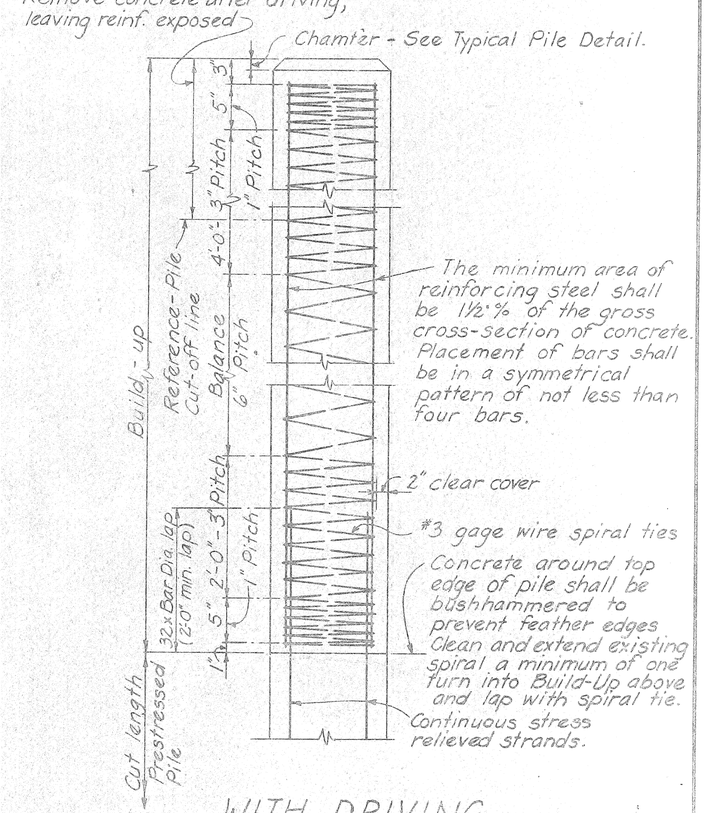

The minimum area of reinforcing steel shall be 1½% of the gross cross-section of concrete. Placement of bars shall be in a symmetrical pattern of not less than four bars.

WITH DRIVING
TYPICAL PILE BUILD-UP DETAIL

GENERAL NOTES

1. Work of cutting off prestressed conc. piles or concrete build-ups shall be performed in such a manner as to avoid spalling or damaging the pile below cut-off. In case of such damage, the pile shall be replaced or repaired by the Contractor at his expense as directed by the Engineer.
2. Portion of pile embedded into footing shall be of sound concrete. Damaged portions shall be removed and pile cut-off elevation lowered as required by the Engineer.

APPROVAL RECOMMENDED: Paul T. Yamashita — BRIDGE DESIGN ENGINEER — DATE 1-23-70

APPROVED: Paul T. Yamashita — ASSISTANT CHIEF, ENGINEERING — DATE 1-28-70

NO.	REVISION	APPROVED BY	DATE

STATE OF HAWAII
DEPARTMENT OF TRANSPORTATION
HIGHWAYS DIVISION

STANDARD DETAILS

PRESTRESSED CONCRETE PILES

Date: Oct. 1968

SHEET No. S-15 OF S-16 SHEETS DB-300-2

FED. ROAD DIST. NO.	STATE	FED. AID PROJ. NO.	FISCAL YEAR	SHEET NO.	TOTAL SHEETS
HAWAII	HAW.	M-7600(1)	1981	C.O. 147	198

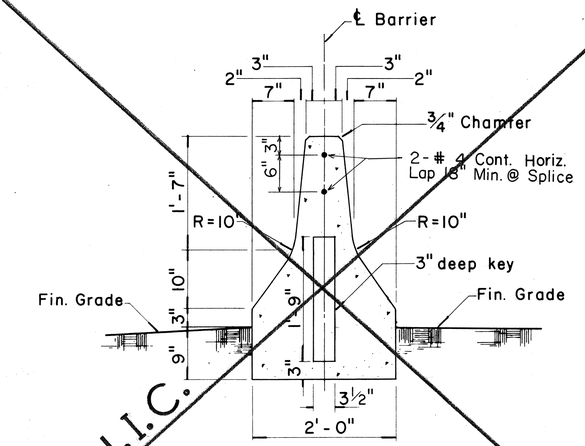

TYPE 4A

Scale: 1" = 1'-0"

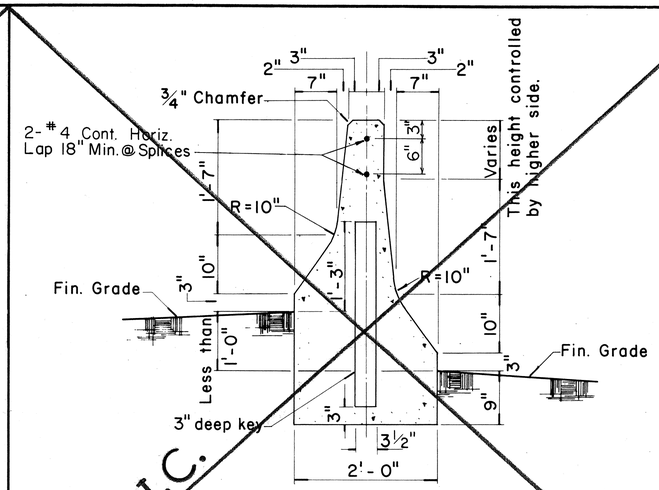

TYPE 4B

Scale: 1" = 1'-0"

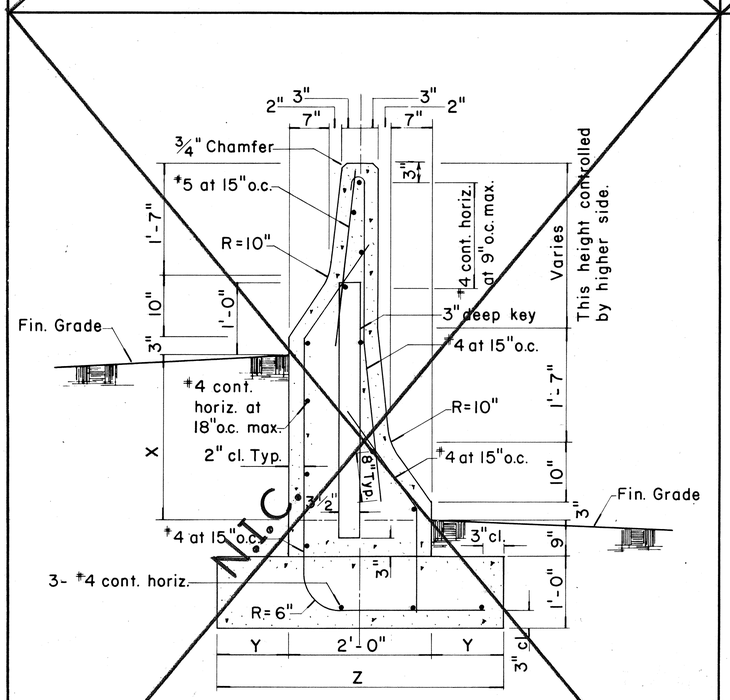

TYPE 4C & TYPE 4D

Scale: 1" = 1'-0"

TYPE	DIFFERENCE IN FIN. GRADE	FOOTING	
	X	Y	Z
4C	1'-0" min., 2'-4" max.	1'-0"	4'-0"
4D	Greater than 2'-4", 4'-4" max.	1'-3"	4'-6"

NOTE:
Except where noted all dimensions shall be the same for Type 4C and Type 4D.

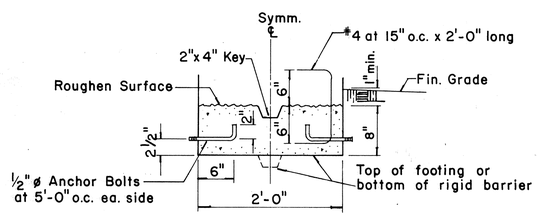

OPTIONAL CONSTRUCTION JOINT DETAILS

Scale: 1" = 1'-0"

NOTE:
The intent of the optional construction joint details for the Type 4 Rigid Barrier Guard Rail is to provide a method of securing the forms and preventing uplift so that the barrier will have a uniform and presentable appearance.
The Contractor may submit an alternate method of constructing the barrier for the approval of the Engineer and for use on a trial basis. Any unsatisfactory work shall be removed or corrected as directed by the Engineer and at the Contractor's expense.

DATE	REVISION
7-10-80	Replaces Superseded Standard Detail DT-521.

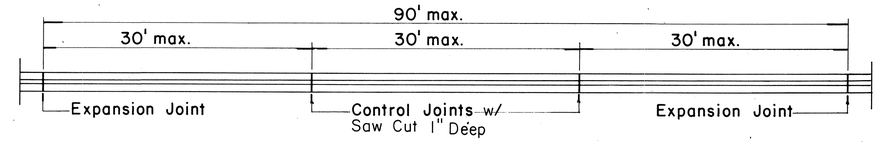

PLAN

Scale: ⅛" = 1'-0"

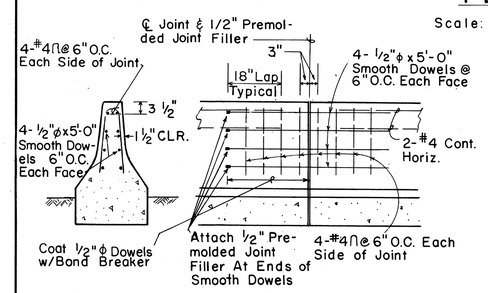

SECTION ELEVATION

EXPANSION JOINT DETAIL

SCALE: 1/2" = 1'-0"

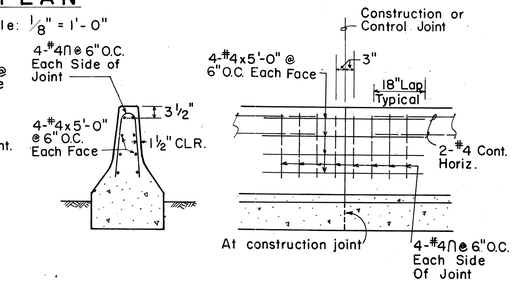

SECTION ELEVATION

CONSTRUCTION & CONTROL JOINT DETAIL

SCALE: 1/2" = 1'-0"

NOTE: 1/2" PREMOLDED JOINT FILLER IS NOT REQUIRED AT CONSTRUCTION JOINTS.

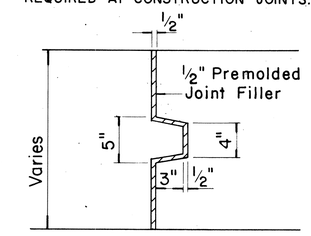

SECTION THRU KEY AT EXPANSION JOINT

Scale: 1½" = 1'-0"

GENERAL NOTES

1. Precast Rigid Barrier Guard Rail may be installed as an option to cast-in-place Type 4 Rigid Barrier Guard Rail. Contractor shall submit shop drawings to Engineer for approval.
2. Expansion Joints shall be constructed at ninety-foot (90 ft.) maximum intervals and at existing expansion joints of structures. (Use ½" premolded joint filler, incidental to Type 4 Rigid Barrier Guard Rail). Control Joints shall be placed between expansion joints at 30' maximum. Shear keys shall be required at all construction joints.
3. The exterior surface and vertical alignment of the Type 4 Rigid Barrier Guard Rail shall be constructed to give a uniform and presentable appearance. Variation of more than ¼" in 20' max. and ½" in 40' or more will be considered objectionable. The Engineer will determine the acceptability of the work.
   During the course of the work, samples may be tested and measurements made to establish whether or not the specified values or dimensions are being met. If the specified values or dimensions are not being met, the Engineer will determine the degree of the non-conformance, the effect on the serviceability of the project, whether the work be accepted and remain in place and, if so, the amount to be paid for such work, or whether the work shall be removed and replaced or otherwise corrected at the Contractor's expense.

NO.	REVISION	APPROVED BY	DATE
1	Supersede Sht. DT 521 Approved 12-30-69	H.T.	2/10/72
2	Added No. 4 Steel Reinforcing Bar. Change Dimension on Type 4C & 4D Detail	H.T.	8/16/77
3	Added additional Reinforcing Bars and Revised Control & Expansion Joints	H.T.	6/20/80

APPROVAL RECOMMENDED:
Eiichi Tanaka — 2/10/72
TRAFFIC ENGINEER — DATE

APPROVED:
Hideo Sakaida — 2/10/72
ASSISTANT CHIEF, ENGINEERING — DATE

STATE OF HAWAII
DEPARTMENT OF TRANSPORTATION
HIGHWAYS DIVISION

STANDARD DETAILS

GUARD RAIL TYPE 4 (RIGID BARRIER)

Scale: As Shown

SHEET No. 1 OF 1 SHEETS | DT 521

C.O. 147

ORIGINAL PLAN	SURVEY PLOTTED BY	DATE
	DRAWN BY	
	TRACED BY	
NOTE BOOK	DESIGNED BY	
	QUANTITIES BY	
No.	CHECKED BY	