FED. ROAD DIST. NO.	STATE	FED. AID PROJ. NO.	FISCAL YEAR	SHEET NO.	TOTAL SHEETS
HAWAII	HAW.	M-7600(1)	1978	89	198

LUMINAIRE No. — 5/A/CA — FEEDER PHASES

LEGEND

SYMBOL	REPRESENTS	REFERENCE DETAIL	REFERENCE NOTE
	TWIN ARM METAL LTG. STD., FOUNDATION, & 150 WATT H.P.S. LAMPS	2/E1 2/E7	
	TWIN ARM METAL LTG. STD., FOUNDATION, & 250 WATT H.P.S. LAMPS	1/E1 2/E7	
	SINGLE ARM METAL LTG. STD., FOUNDATION, & 150 WATT H.P.S. LAMP	2/E1 2/E7	
R M	REMOVE EXISTING METAL LTG. STD.		
K M	RETAIN EXISTING METAL LTG. STD.		
R U	REMOVE EXISTING LUMINAIRE & BKT FROM EXISTING UTILITY CO. POLE		
R W	REMOVE EXISTING LUMINAIRE AND WOOD POLE		
	EXISTING TRAFFIC SIGNAL PULLBOX		
	PULLBOX, TYPE CC3 FOR LTG. SYSTEM PULLBOX, TYPE CC3 FOR TRAFFIC SIGNAL SYSTEM	5/E8	
	PULLBOX, TYPE CC1 FOR LTG. SYSTEM PULLBOX, TYPE CC1 FOR TRAFFIC SIGNAL SYSTEM	5/E8	
PB	PULLBOX, CAST IRON	2/E8	
	UNDERGROUND RACEWAY FOR LTG. SYSTEM		2/E1, 3/E1
	RACEWAY RUN IN STRUCTURE	4/E8	3-5/E1
	NEW TRAFFIC SIGNAL DUCTLINE (CONDUITS & CABLES AS REQ'D.)		2/E1, 3/E1
	CAP AND MARK RACEWAY		
	UNDERDECK LUMINAIRE, SUPPORT, & 150 WATT H.P.S. LAMP	2/E8 3/E8	
	12" RY ← RELOCATED TRAFFIC SIGNAL HEAD		SEE DWG DT 400
	RELOCATED TYPE I TRAFFIC SIGNAL STANDARD		SEE DWG DT400
	NEW TYPE II TRAFFIC SIGNAL STANDARD AND MAST ARM OF LENGTH INDICATED		SEE DWG DT402 DT404
	12" RY ↑ RELOCATED TRAFFIC SIGNAL HEAD		SEE DWG DT400
	TRAFFIC SIGNAL SYSTEM VEHICLE DETECTOR LOOP		SEE DWG DT405
SC	RELOCATED OR EXISTING TRAFFIC SIGNAL SYSTEM CONTROLLER AND FOUNDATION		SEE DWG DT404

NOTE: ESTIMATED QUANTITY FOR LUMP SUM PAY ITEMS WILL BE USED TO DETERMINE THE THEORETICAL UNIT PRICES AS DEFINED IN SUBSECTION 104.02 (B) OF THE STD. SPECIFICATIONS.

ELECTRICAL

ITEM No	ITEM	UNIT	QUANTITIES HIGHWAY	QUANTITIES BRIDGE
622.7002	METAL LIGHTING STANDARD ON GRADE	EA.	23	
622.7003	METAL LIGHTING STANDARD ON GRADE, TWIN ARM	EA.	26	
622.7018	3" RACEWAY IN STRUCTURE	L.S.		730
622.7015	UNDERGROUND RACEWAY, LTG. SYSTEM	L.S.	11,500	
622.7008	WIRE, 600 VOLT, 1/C, #6	L.S.	32,000	1100
622.7009	WIRE, 600 VOLT, 1/C, #4	L.S.	7800	3900
622.7016	PULLBOX, TYPE CC, LTG. SYSTEM	EA.	54	
622.7017	LIGHTING SYSTEM APPURTENANCES	L.S.	1	
622.7006	UNDERDECK LUMINAIRE	EA.		4
623.5001	FURNISH AND INSTALL ONE 2-INCH CONDUIT	L.S.	2,300	
623.5011	FURNISH AND INSTALL TWO 2-INCH CONDUITS	L.S.	240	
623.5021	FURNISH AND INSTALL THREE 2-INCH CONDUITS	L.S.	130	
623.5031	FURNISH AND INSTALL FOUR 2-INCH CONDUITS	L.S.	70	
623.7010	FURN. & INST. ONE-2 CONDUCTOR #14 LOOP DET. CABLE	L.S.	320	
623.7020	FURN. & INST. ONE-19 CONDUCTOR #14 LOOP CONTROL CA.	L.S.	300	
623.7040	FURN. & INST. ONE-2 CONDUCTOR #6 POWER CABLE	L.S.	100	
623.9010	PULLBOX, TYPE CC, TRAFFIC SIGNAL SYSTEMS	EA.	19	
623.9012	TRAFFIC SIGNAL SYSTEM NO. 1-2	L.S.	1	
630.1000	CONSTRUCT TRANSFORMER CONCRETE PAD	EA.	1	

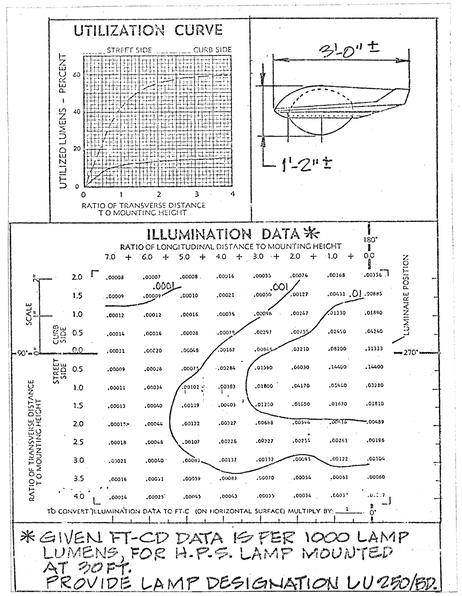

* GIVEN FT-CD DATA IS PER 1000 LAMP LUMENS, FOR H.P.S. LAMP MOUNTED AT 30 FT. PROVIDE LAMP DESIGNATION LU250/BD.

DETAIL 1/E1

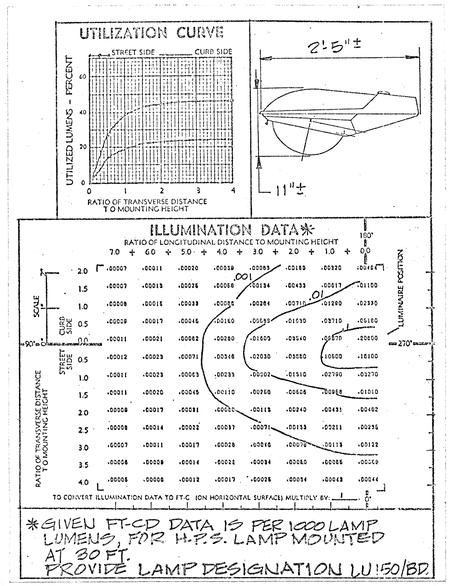

* GIVEN FT-CD DATA IS PER 1000 LAMP LUMENS, FOR H.P.S. LAMP MOUNTED AT 30 FT. PROVIDE LAMP DESIGNATION LU150/BD.

DETAIL 2/E1

LUMINAIRE PHOTOMETRICS

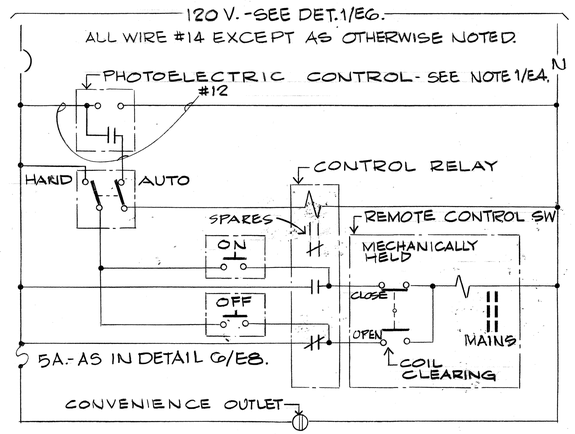

DETAIL 3/E1

HWY LIGHTING CONTROL SCHEMATIC

LIST OF ABBREVIATIONS

C	Raceway (Type and size as indicated.)
NMR	Non-metallic Raceway (Type PVC, BFD, or CAD)
RGS	Rigid Galvanized Steel Conduit
RAL	Rigid Aluminum Conduit
PVC	Polyvinyl chloride Conduit
BFD	Bituminous Fiber Duct
CAD	Cement Asbestos Duct
LTG	Lighting
LTG. STD.	Lighting Standard
BKT	Bracket Arm
FND	Foundation
CKT	Circuit
FDR	Feeder (or branch thereof)
GND	Ground
N.T.S.	Not To Scale
N.I.C.	Not In Contract
FUT.	Future
EXIST.	Existing
CONC.	Concrete
H.P.S.	High Pressure Sodium (lamp)

NOTES:

1/E1. DETAILS AND NOTES ARE NUMBERED AS FOLLOWS:
3/E1 — DETAIL OR NOTE NUMBER; ELECTRICAL SHEET ON WHICH DETAIL OR NOTE IS SHOWN.

2/E1. PROVIDE UNDERGROUND RACEWAYS AND RACEWAYS IN STRUCTURE IN 2" SIZE, EXCEPT AS OTHERWISE INDICATED.

3/E1. FOR UNDERGROUND RACEWAYS PROVIDE TYPE RGS OR TYPE NMC, 2 FEET BELOW GRADE. FOR RACEWAYS IN STRUCTURE AND RACEWAYS EXPOSED, PROVIDE TYPE RGS, EXCEPT AS OTHERWISE NOTED.

4/E1. PROVIDE AN EXPANSION-DEFLECTION FITTING IN ALL RACEWAY AT EACH BRIDGE EXPANSION JOINT. COSTS TO BE INCIDENTAL TO CONTRACT ITEMS FOR RACEWAYS IN STRUCTURES.

5/E1. BOND WITH #6 WIRE ALL METAL RACEWAY IN STRUCTURE TO GRD. ROD AT PULLBOX IN GRADE AT EACH END OF STRUCTURE. COSTS TO BE INCIDENTAL TO VARIOUS CONTRACT ITEMS FOR CABLE AND WIRES.

6/E1. TERMINATE ALL PHASES OF FEEDER AT POINT INDICATED.

M. A. MARSZALOWICZ — REGISTERED PROFESSIONAL ENGINEER No. 2366 — HAWAII, U.S.A.

THIS WORK WAS PREPARED BY ME OR UNDER MY SUPERVISION

M. A. Marszalowicz

STATE OF HAWAII
DEPARTMENT OF TRANSPORTATION
HIGHWAYS DIVISION

ELECTRICAL LEGEND & NOTES

FORT WEAVER ROAD
ROUTE H-1 TO SOUTH OF FARRINGTON HIGHWAY

SCALE: NONE — DATE: AUG. 1978

SHEET No. E1 OF E8 SHEETS

ORIGINAL PLAN — SURVEY PLOTTED BY / DRAWN BY / TRACED BY / DESIGNED BY / QUANTITIES BY / CHECKED BY — DATE — NOTE BOOK No.

FED. ROAD DIST. NO.	STATE	FED. AID PROJ. NO.	FISCAL YEAR	SHEET NO.	TOTAL SHEETS
HAWAII	HAW.	M-7600(1)	1978	90	108

NOTES:

1. Hwy. Lt. Standards K-10, K-12, K-14 & K-16 to remain.
2. Hwy. Lt. Standard K-11 to remain until permanent lights in median are in operation.
3. Hwy. Lt. Standards K-13 & K-15 can be removed after new conduits and wire are installed and lights K-12, 14 & 16 are operational w/new system.

SCALE: 1"=50'

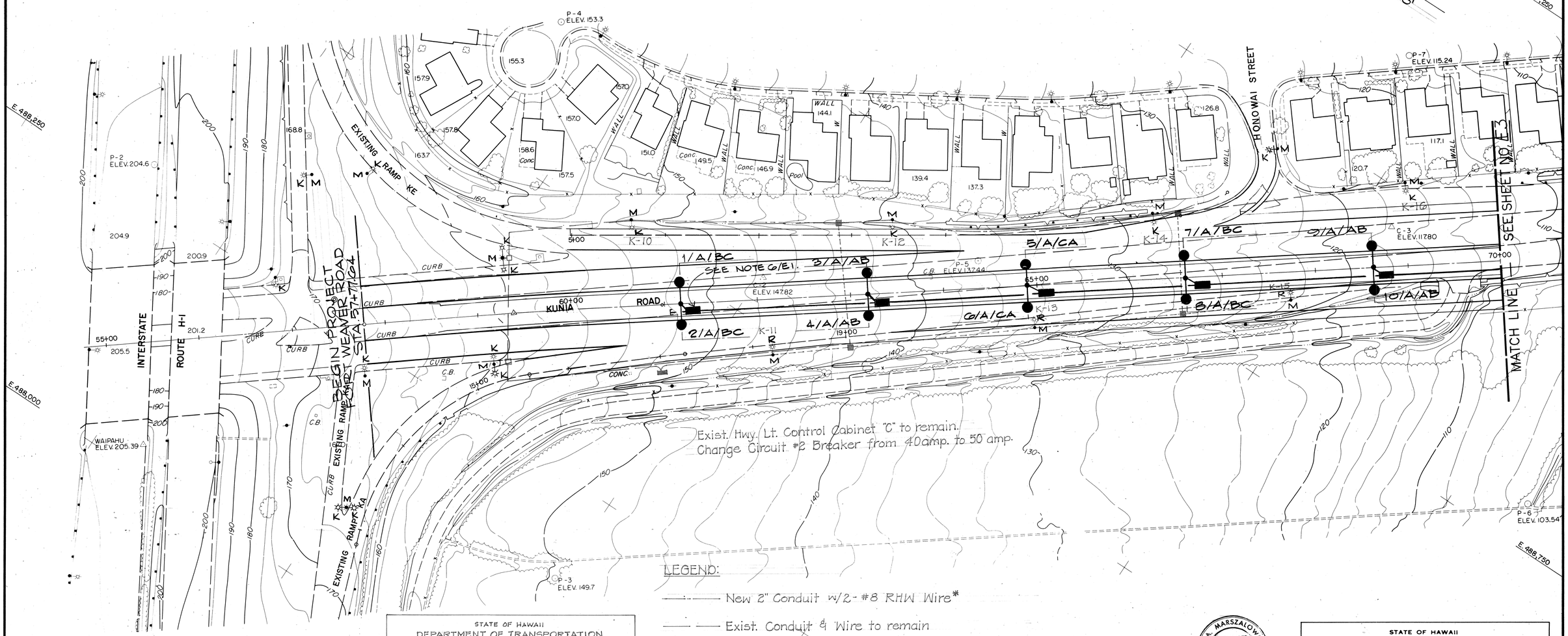

LEGEND:

- New 2" Conduit w/2-#8 RHW Wire*
- Exist. Conduit & Wire to remain
- Exist. Conduit & Wire to be removed
- * Splice and connect to existing Wires.

STATE OF HAWAII
DEPARTMENT OF TRANSPORTATION
HIGHWAYS DIVISION

CONTRACT CHANGE ORDER NO. 10
HIGHWAY LIGHTING REVISION
FAUSP NO. M-7600(1)

SCALE: AS SHOWN JULY 1979

M. A. MARSZALOWICZ
REGISTERED PROFESSIONAL ENGINEER
No. 2866
HAWAII, U.S.A.

THIS WORK WAS PREPARED BY ME OR UNDER MY SUPERVISION.
M. A. Marszalowicz

STATE OF HAWAII
DEPARTMENT OF TRANSPORTATION
HIGHWAYS DIVISION

ELECTRICAL PLAN
PART I

FORT WEAVER ROAD
ROUTE H-1 TO SOUTH OF FARRINGTON HIGHWAY

SCALE: AS SHOWN DATE: AUG. 1978

SHEET NO. E2 OF 8 SHEETS

ORIGINAL PLAN	SURVEY PLOTTED BY	DATE
	DRAWN BY	
	TRACED BY	
NOTE BOOK	DESIGNED BY	
	QUANTITIES BY	
No.	CHECKED BY	

FED. ROAD DIST. NO.	STATE	FED. AID PROJ. NO.	FISCAL YEAR	SHEET NO.	TOTAL SHEETS
HAWAII	HAW.	M-7600(1)	1978	91	108

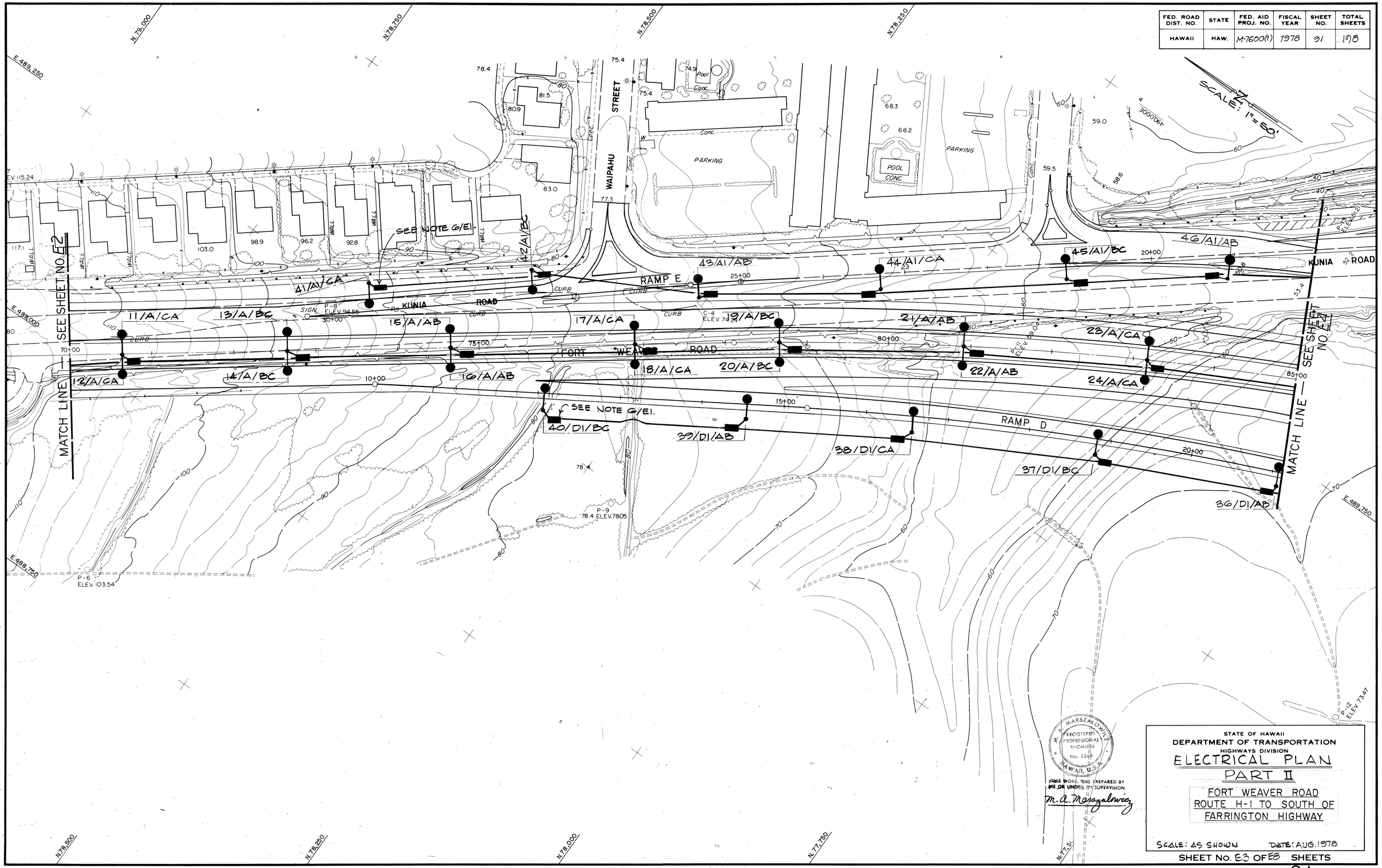

ORIGINAL PLAN	SURVEY PLOTTED BY	DATE
	DRAWN BY	
	TRACED BY	
NOTE BOOK	DESIGNED BY	
	QUANTITIES BY	
No.	CHECKED BY	

M. A. MARSZALOWICZ
REGISTERED PROFESSIONAL ENGINEER
No. 2306
HAWAII, U.S.A.

THIS WORK WAS PREPARED BY ME OR UNDER MY SUPERVISION.

M. A. Marszalowicz

STATE OF HAWAII
DEPARTMENT OF TRANSPORTATION
HIGHWAYS DIVISION

ELECTRICAL PLAN
PART II

FORT WEAVER ROAD
ROUTE H-1 TO SOUTH OF FARRINGTON HIGHWAY

SCALE: AS SHOWN DATE: AUG. 1978

SHEET No. E3 OF 8 SHEETS

FED. ROAD DIST. NO.	STATE	FED. AID PROJ. NO.	FISCAL YEAR	SHEET NO.	TOTAL SHEETS
HAWAII	HAW.	M-7600(1)	1978	92	198

NOTES

1/E4. MOUNT PHOTOCELL ATOP LTG. STD. No 49, ROUTE WIRING (PER DETAIL 3/E1) WITH FDR.

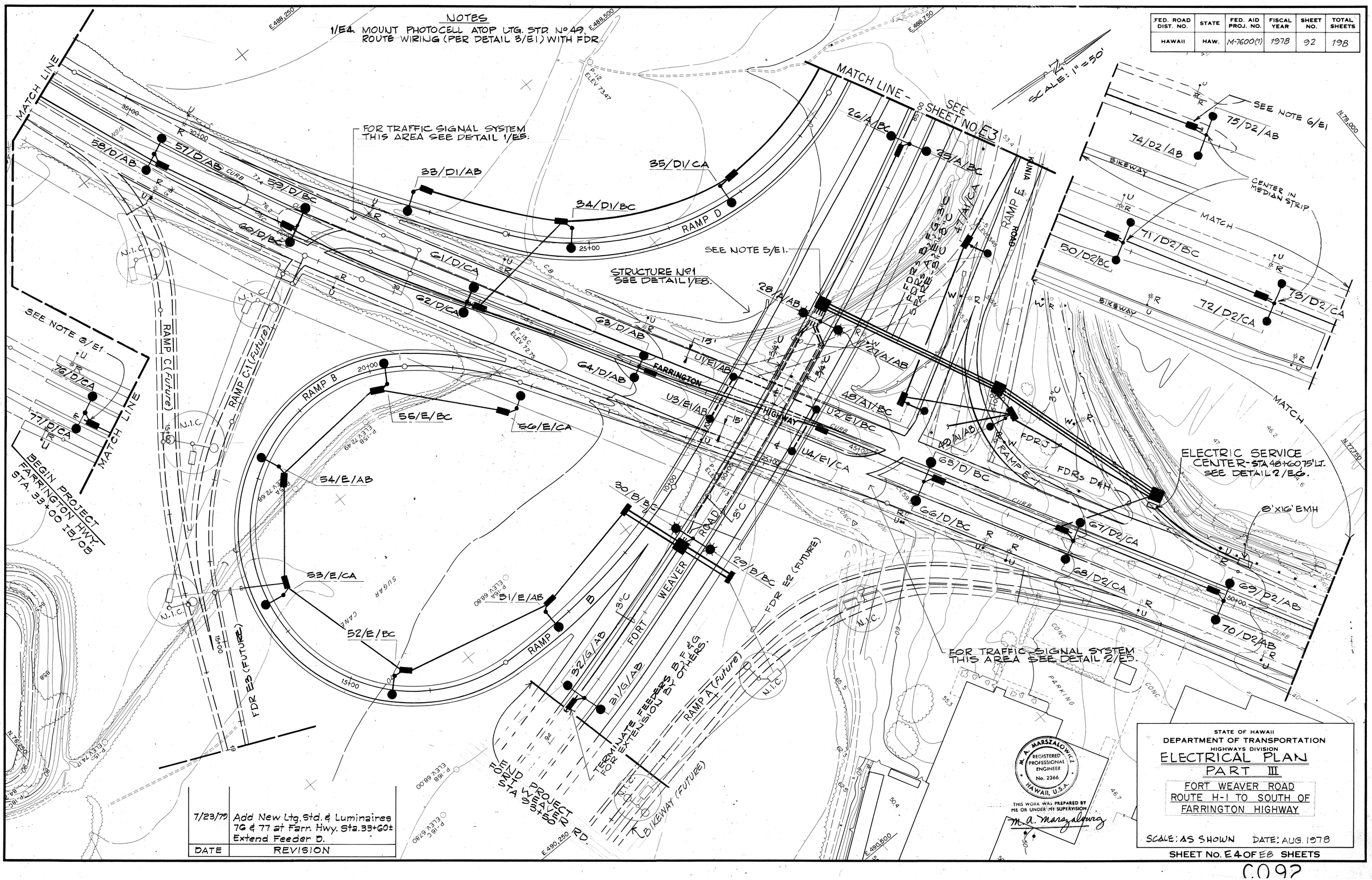

DATE	REVISION
7/23/79	Add New Ltg. Std. & Luminaires 76 & 77 at Farr. Hwy. Sta. 33+60± Extend Feeder D.

ORIGINAL PLAN — SURVEY PLOTTED BY — DRAWN BY — TRACED BY — DESIGNED BY — QUANTITIES BY — CHECKED BY — DATE — NOTE BOOK — No.

STATE OF HAWAII
DEPARTMENT OF TRANSPORTATION
HIGHWAYS DIVISION

ELECTRICAL PLAN
PART III

FORT WEAVER ROAD
ROUTE H-1 TO SOUTH OF FARRINGTON HIGHWAY

M. A. MARSZALOWICZ
REGISTERED PROFESSIONAL ENGINEER
No. 2366
HAWAII, U.S.A.

THIS WORK WAS PREPARED BY ME OR UNDER MY SUPERVISION

M. A. Marszalowicz

SCALE: AS SHOWN DATE: AUG. 1978

SHEET No. E4 OF E8 SHEETS

C.097

FED. ROAD DIST. NO.	STATE	FED. AID PROJ. NO.	FISCAL YEAR	SHEET NO.	TOTAL SHEETS
HAWAII	HAW.	M-7600(7)	1978	93	198

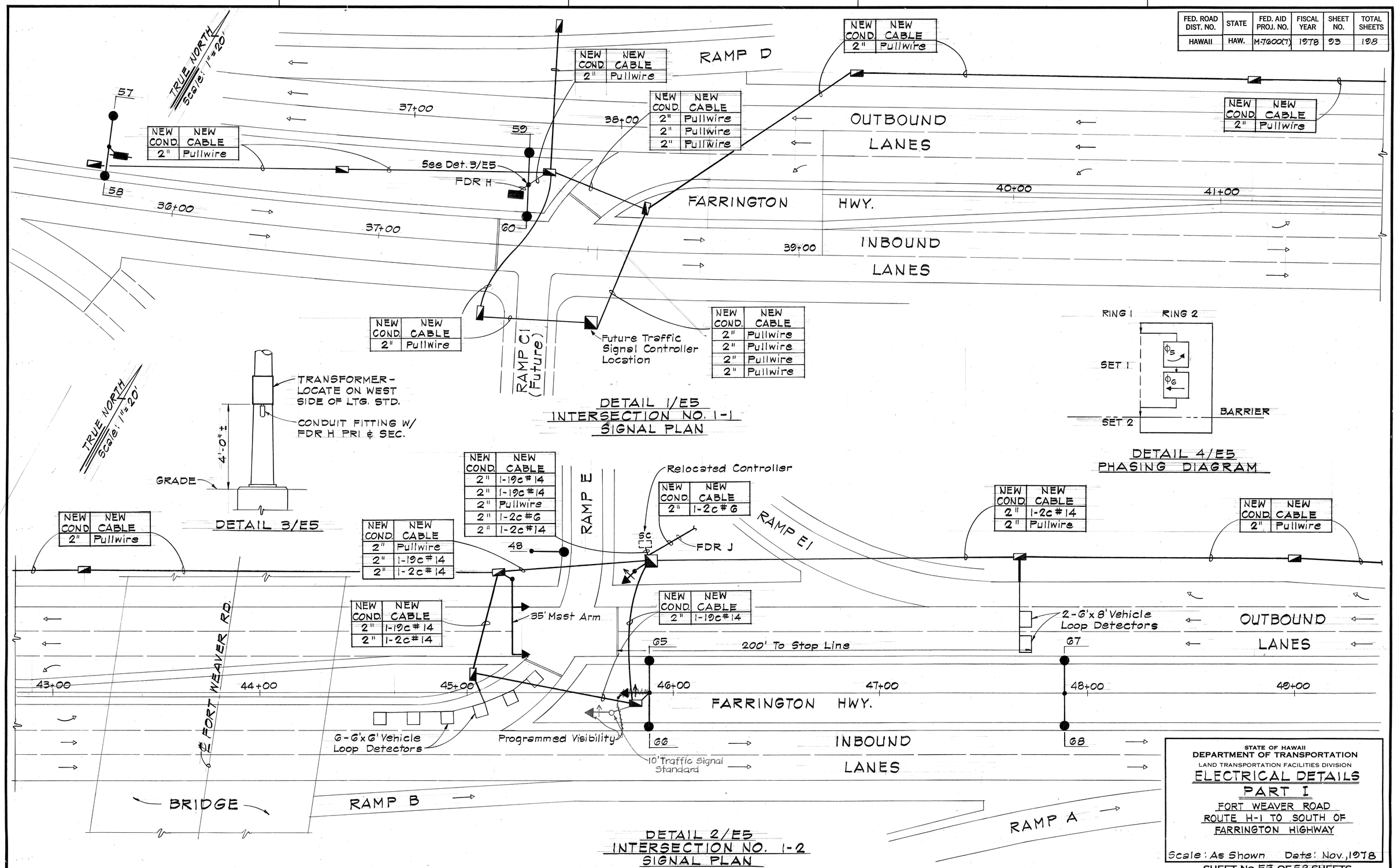

STATE OF HAWAII
DEPARTMENT OF TRANSPORTATION
LAND TRANSPORTATION FACILITIES DIVISION

ELECTRICAL DETAILS
PART I

FORT WEAVER ROAD
ROUTE H-1 TO SOUTH OF
FARRINGTON HIGHWAY

Scale: As Shown Date: Nov., 1978

SHEET No. E5 OF E8 SHEETS

ORIGINAL PLAN	SURVEY PLOTTED BY	DATE
	DRAWN BY	"
	TRACED BY	"
	DESIGNED BY	"
NOTE BOOK	QUANTITIES BY	"
No.	CHECKED BY	"

FED. ROAD DIST. NO.	STATE	FED. AID PROJ. NO.	FISCAL YEAR	SHEET NO.	TOTAL SHEETS
HAWAII	HAW.	M-7600(7)	1978	93A	198

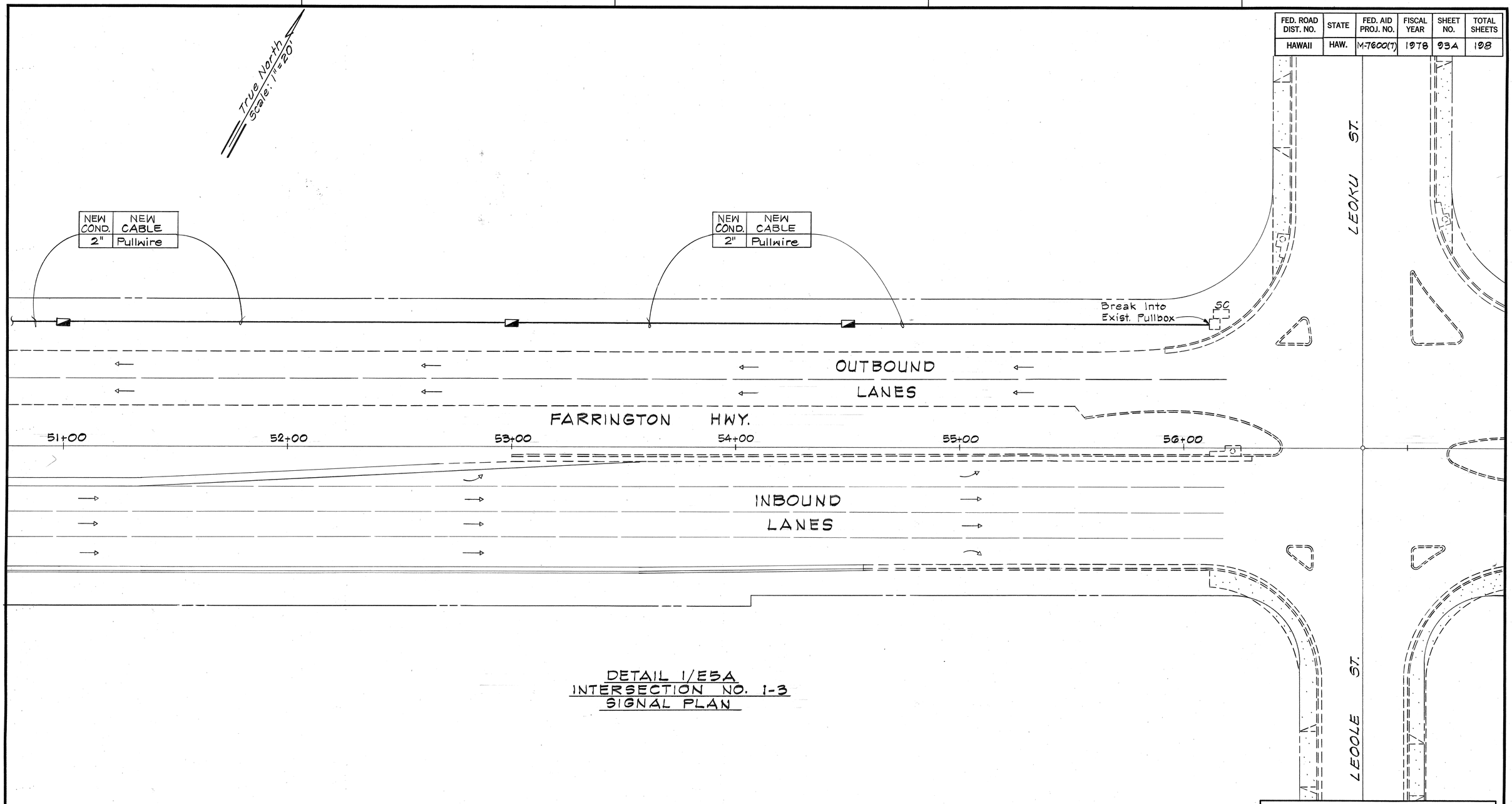

DETAIL 1/E5A
INTERSECTION NO. 1-3
SIGNAL PLAN

STATE OF HAWAII
DEPARTMENT OF TRANSPORTATION
LAND TRANSPORTATION FACILITIES DIVISION

ELECTRICAL DETAILS
PART II

FORT WEAVER ROAD
ROUTE H-1 TO SOUTH OF
FARRINGTON HIGHWAY

Scale: As Shown Date: Nov., 1978

SHEET No. E5A OF E 8 SHEETS

ORIGINAL PLAN	SURVEY PLOTTED BY	DATE
	DRAWN BY	" "
	TRACED BY	" "
NOTE BOOK	DESIGNED BY	" "
No.	QUANTITIES BY	" "
	CHECKED BY	" "

FED. ROAD DIST. NO.	STATE	FED. AID PROJ. NO.	FISCAL YEAR	SHEET NO.	TOTAL SHEETS
HAWAII	HAW.	M-7600(1)	1978	94	198

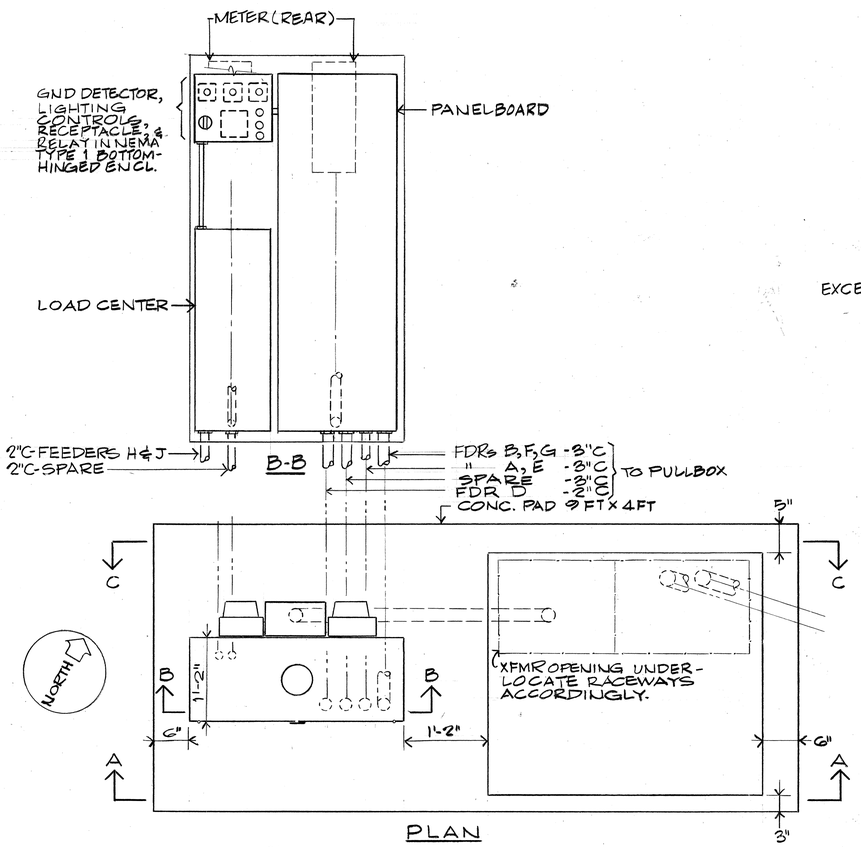

PLAN

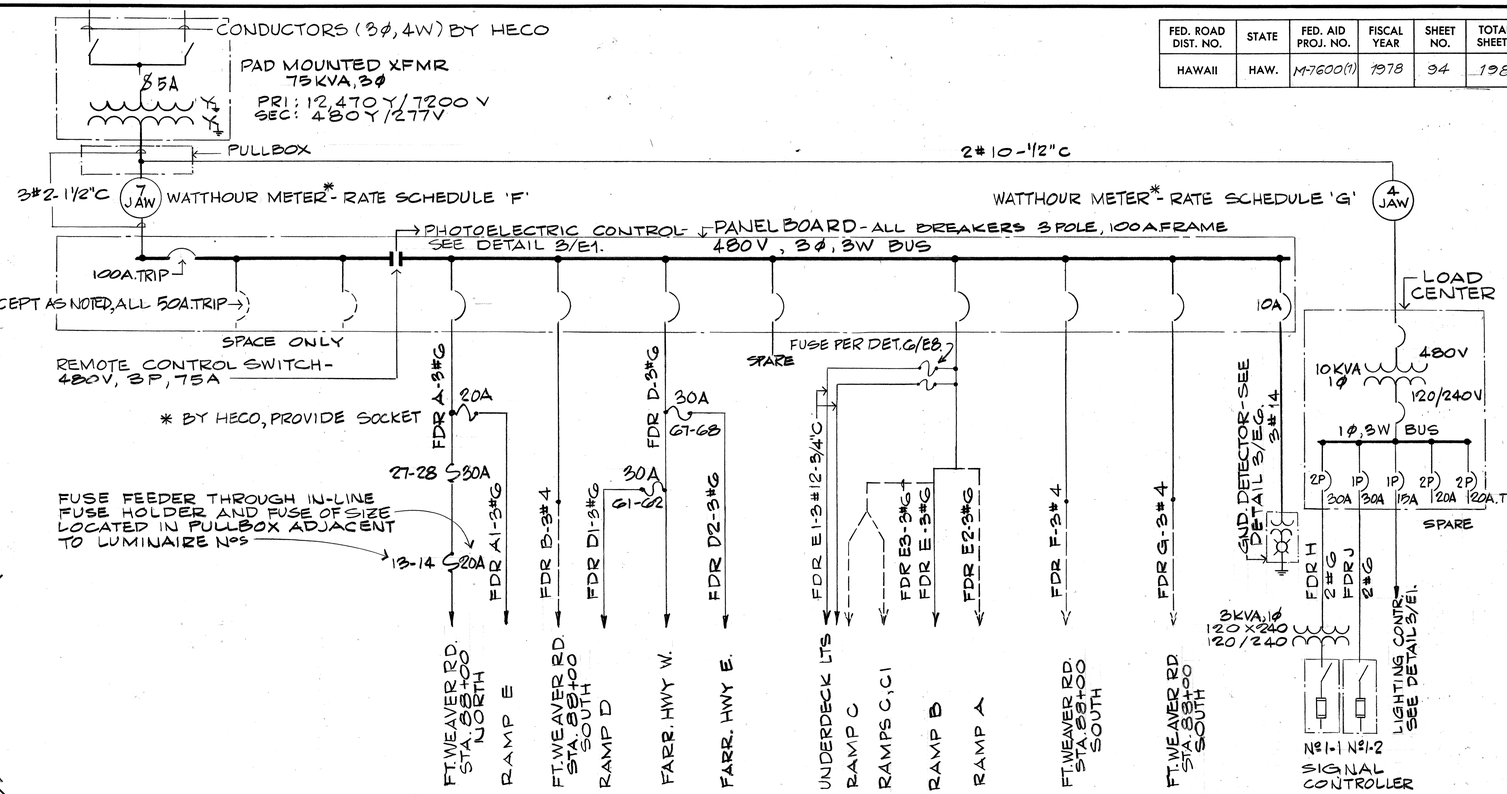

DETAIL 1/EG - ONE LINE DIAGRAM

NOTE: ITEMS SHOWN DASHED ARE N.I.C.; STATIONING IS APPROX.

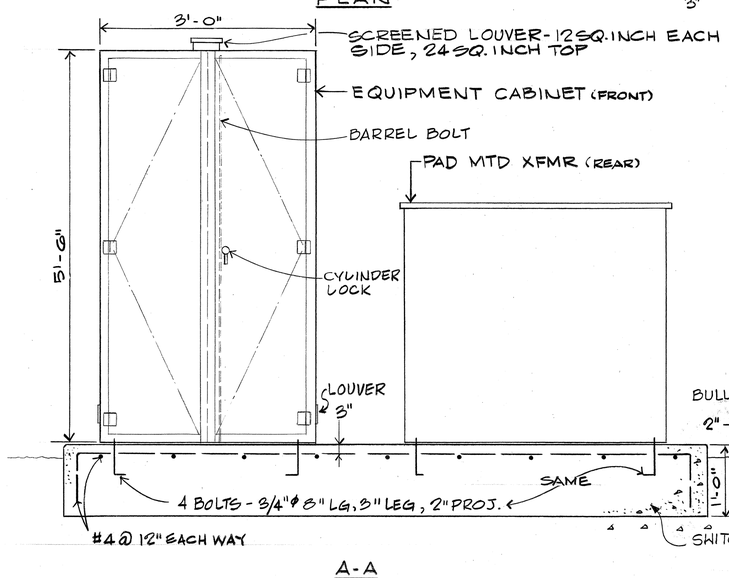

A-A

NOTE

INDICATED DIMENSIONS ARE MINIMUM, ENLARGE AS APPROPRIATE TO SUIT EQUIPMENT APPROVED.

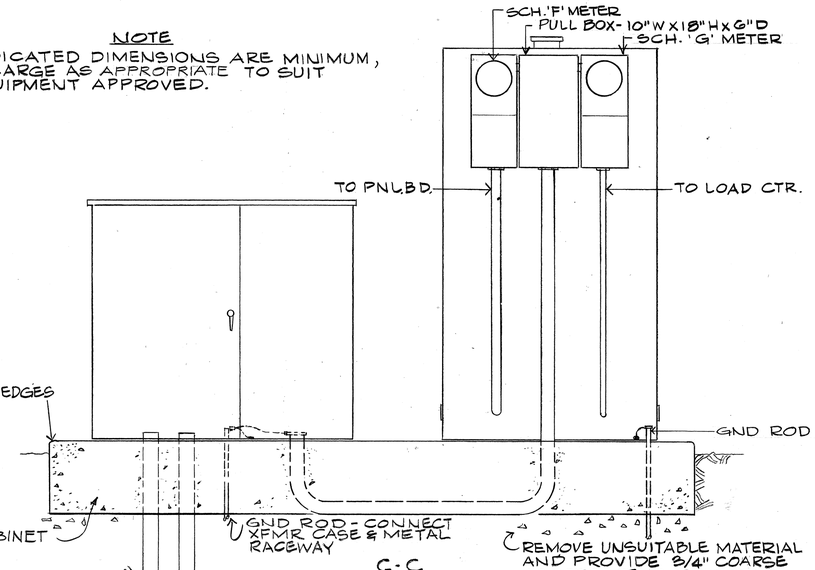

C-C

DETAIL 2/EG - ELECTRIC SERVICE CENTER

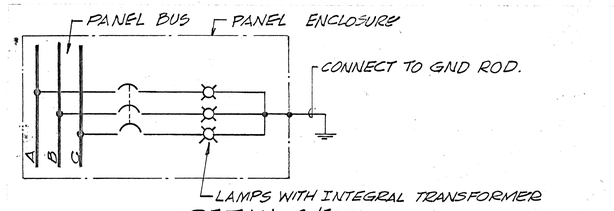

DETAIL 3/EG
GND. DETECTOR LAMP CONNECTION

M. A. MARSZALOWICZ REGISTERED PROFESSIONAL ENGINEER No. 2366 HAWAII, U.S.A.

THIS WORK WAS PREPARED BY ME OR UNDER MY SUPERVISION

M. A. Marszalowicz

STATE OF HAWAII
DEPARTMENT OF TRANSPORTATION
HIGHWAYS DIVISION

ELECTRICAL DETAILS
PART III

FORT WEAVER ROAD
ROUTE H-1 TO SOUTH OF FARRINGTON HIGHWAY

SCALE: 1" = 1 FT DATE: AUG. 1978

SHEET No. EG OF E8 SHEETS

ORIGINAL PLAN	SURVEY PLOTTED BY	DATE
	DRAWN BY	
	TRACED BY	
NOTE BOOK	DESIGNED BY	
No.	QUANTITIES BY	
	CHECKED BY	

FED. ROAD DIST. NO.	STATE	FED. AID PROJ. NO.	FISCAL YEAR	SHEET NO.	TOTAL SHEETS
HAWAII	HAW.	M-7600(7)	1978	95	198

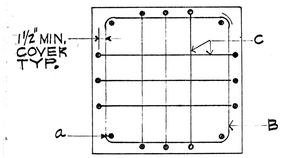

SECTION B-B
REINFORCING PLAN

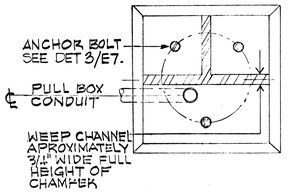

SECTION A-A
FOUNDATION PLAN

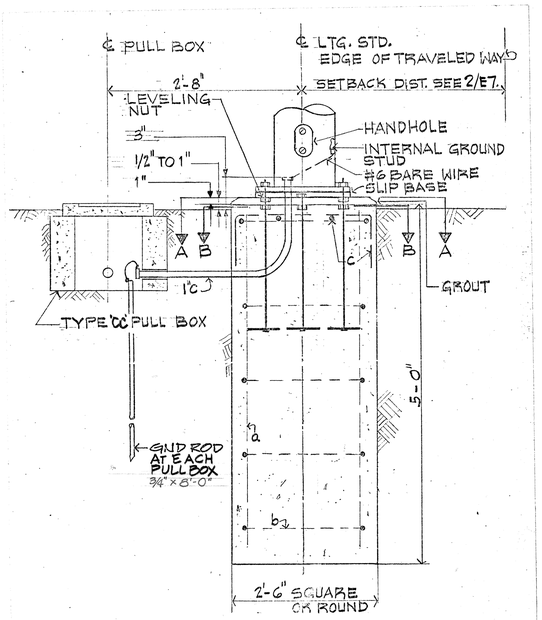

DETAIL 1/E7
LIGHTING STANDARD FOUNDATION, SLIP BASE
(ALL LUMINAIRES EXCEPT #36, #37, #38, #39, #51, #56)
SCALE: 1"=1'-0"

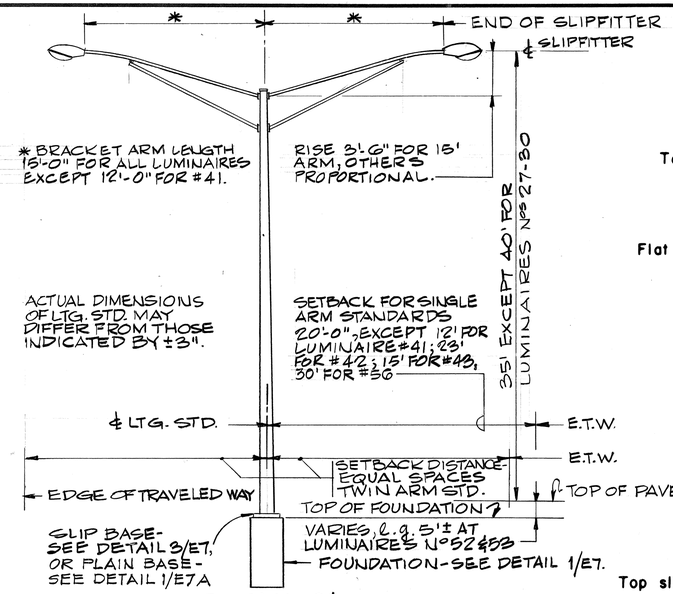

DETAIL 2/E7
LIGHTING STANDARD
SCALE: 3/16"=1'-0"

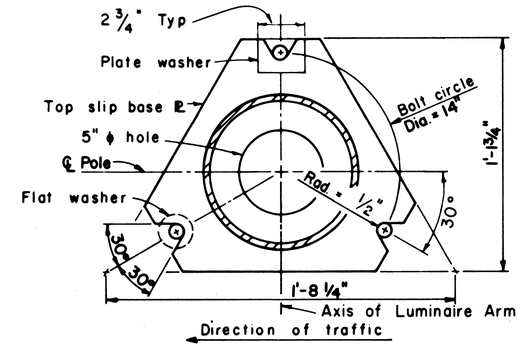

PLAN- TOP PLATE

NOTES - DETAIL 3/E7

1. PLATES SHALL CONFORM TO A.S.T.M. A-36, EXCEPT AS NOTED.
2. CAST OPTION SHALL CONFORM TO A.S.T.M. A-27 GRADE 70-40. ALTERNATIVE DETAILS APPROVED BY THE ENGINEER MAY BE SUBSTITUTED FOR THE ARM CONNECTIONS SHOWN.
3. TORQUE 7/8" H.S. BOLTS TO 84 FOOT-POUNDS.
4. 7/8" HIGH STRENGTH ANCHOR BARS, WRENCH TIGHTEN, TORQUE REQUIREMENT WAIVED. FABRICATORS ELECTING TO USE LARGER MINIMUM ARM DIAMETERS MUST ADJUST THE DETAILS AS REQUIRED TO PERMIT SOLID SEATING OF CAP SCREWS. IN LIEU OF THE TORQUE REQUIREMENTS FOR H.S. BOLTS, CAP SCREWS SHALL BE TIGHTENED BY THE TURN-OF-NUT METHOD 1/6 TURN FROM SNUG TIGHT CONDITION. NO WASHER WILL BE REQUIRED.
5. H.S. BOLTS, FLAT WASHERS AND NUTS AND WASHERS FOR H.S. ANCHOR BARS SHALL CONFORM TO A.S.T.M. A-325.

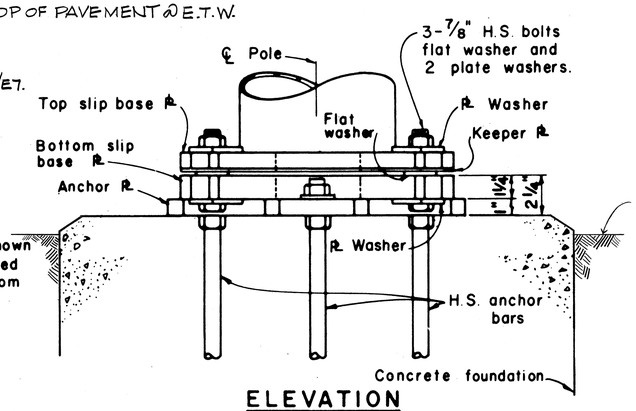

ELEVATION

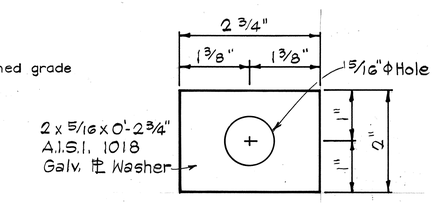

PLATE WASHER

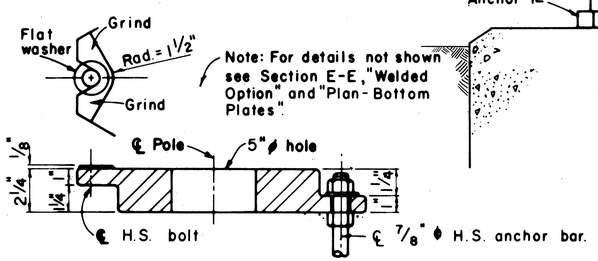

CAST OPTION

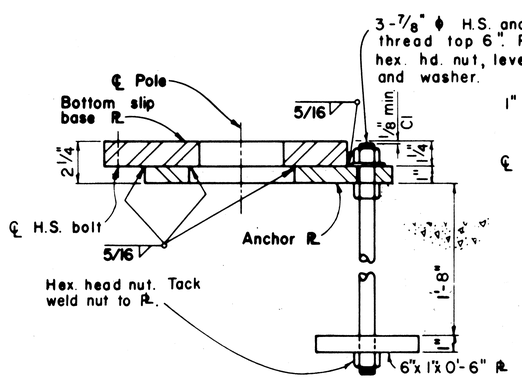

WELDED OPTION

SECTION E-E

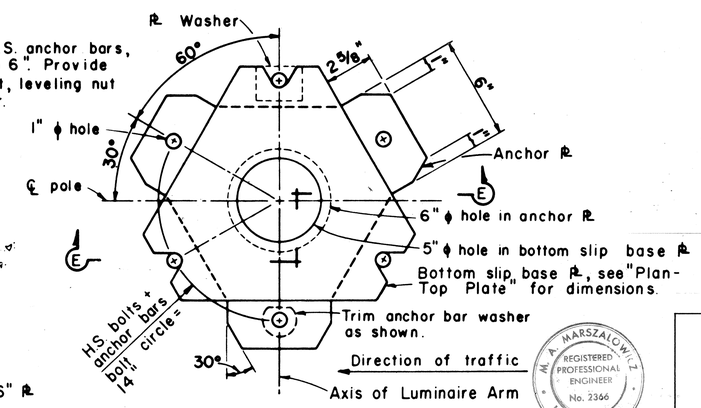

PLAN - BOTTOM PLATES

SLIP BASE PLATE DETAILS

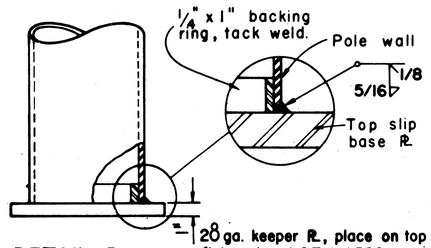

DETAIL B

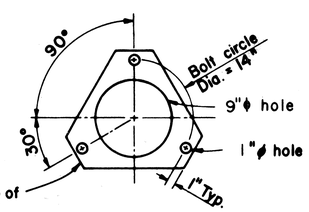

KEEPER PLATE

DATE	REVISION
8-9-79	Revised Detail 1/E7 to indicate Slip Base Foundation not applicable to certain Luminaires. Revised Detail 2/E7 to indicate 30' Setback for Luminaire #56 & provide reference to Detail for Plain Base.

STATE OF HAWAII
DEPARTMENT OF TRANSPORTATION
HIGHWAYS DIVISION

ELECTRICAL DETAILS
PART IV

FORT WEAVER ROAD
ROUTE H-1 TO SOUTH OF FARRINGTON HIGHWAY

M. A. MARSZALOWICZ
REGISTERED PROFESSIONAL ENGINEER
No. 2366
HAWAII, U.S.A.

THIS WORK WAS PREPARED BY ME OR UNDER MY SUPERVISION.
M. A. Marszalowicz

SCALE: AS SHOWN DATE: AUG. 1978

SHEET No. E7 OF 88 SHEETS

DETAIL 3/E7 LIGHTING STANDARD SLIP BASE

ORIGINAL PLAN | SURVEY PLOTTED BY | DRAWN BY | TRACED BY | DESIGNED BY | QUANTITIES BY | CHECKED BY | NOTE BOOK | No. | DATE

CO 95

FED. ROAD DIST. NO.	STATE	FED. AID PROJ. NO.	FISCAL YEAR	SHEET NO.	TOTAL SHEETS
HAWAII	HAW.	M-7600(1)	1980	C0955-1	128

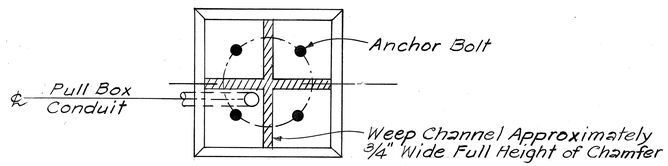

SECTION A-A

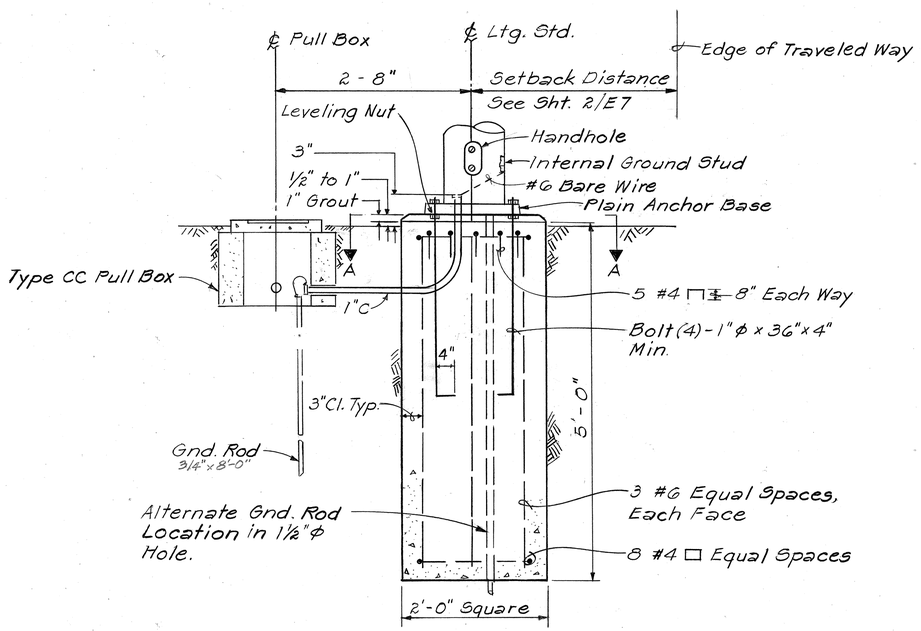

DETAIL 1/E7A

LIGHTING STANDARD FOUNDATION, PLAIN BASE

(LUMINAIRES #36, #37, #38, #39, #51 & #56 ONLY)

Not To Scale

ORIGINAL PLAN	SURVEY PLOTTED BY	DATE
	DRAWN BY	"
	TRACED BY	"
NOTE BOOK	DESIGNED BY	"
	QUANTITIES BY	"
No.	CHECKED BY	"

STATE OF HAWAII
DEPARTMENT OF TRANSPORTATION
LAND TRANSPORTATION FACILITIES DIVISION

ELECTRICAL DETAILS
PART IV A

FORT WEAVER ROAD
ROUTE H-1 TO SOUTH OF
FARRINGTON HIGHWAY

SCALE: AS SHOWN DATE: AUG., 1979

SHEET No. E7A OF E8 SHEETS

C095S-1

FED. ROAD DIST. NO.	STATE	FED. AID PROJ. NO.	FISCAL YEAR	SHEET NO.	TOTAL SHEETS
HAWAII	HAW.	M-7600(1)	1978	96	198

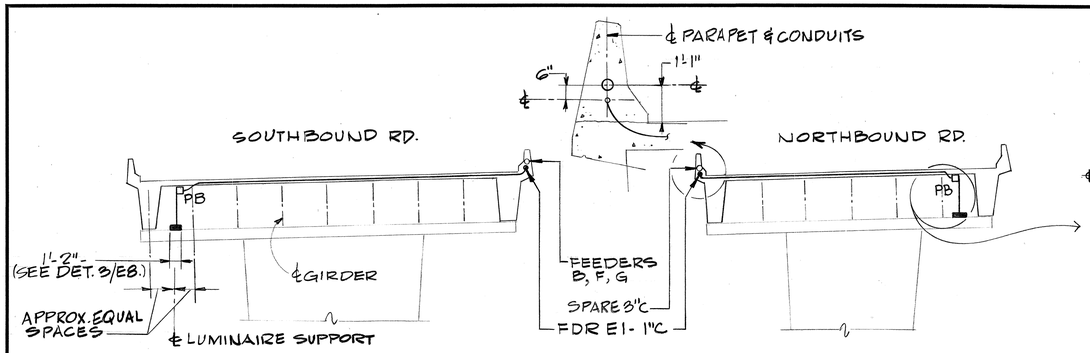

DETAIL 1/E8
STRUCTURE Nº1 UNDERDECK LIGHTING
1" = 10'

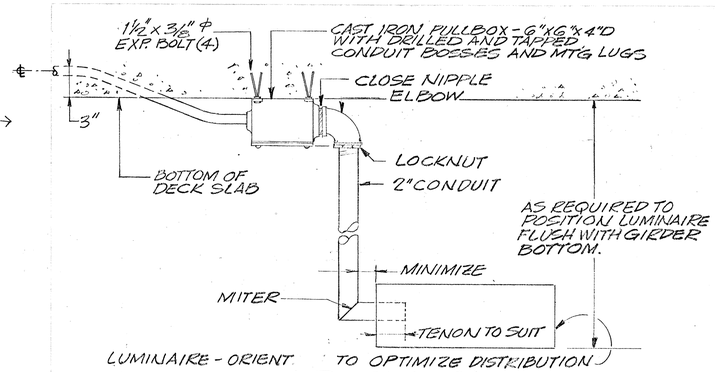

DETAIL 2/E8
UNDERDECK LUMINAIRE MTG
N. T. S.

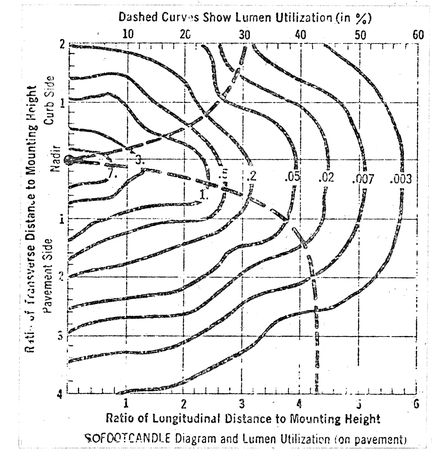

DATA BASED ON 250-WATT HPS 25,500 LUMEN LAMP & 25' MOUNTING HEIGHT.
PROVIDE LAMP DESIGNATION # LU150/BD.

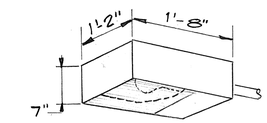

DETAIL 3/E8
UNDERDECK LUMINAIRE

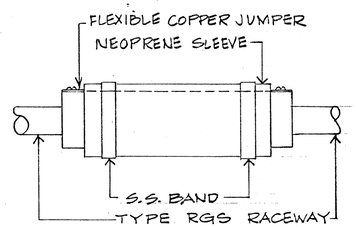

DETAIL 4/E8
EXPANSION-DEFLECTION FITTING

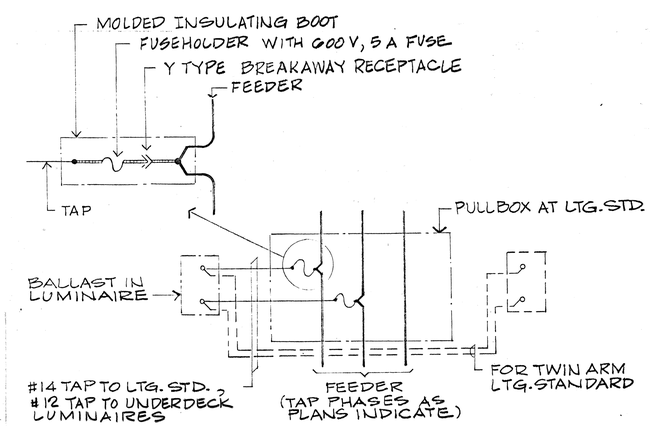

DETAIL 6/E8
TAP TO LTG. STD. LUMINAIRE

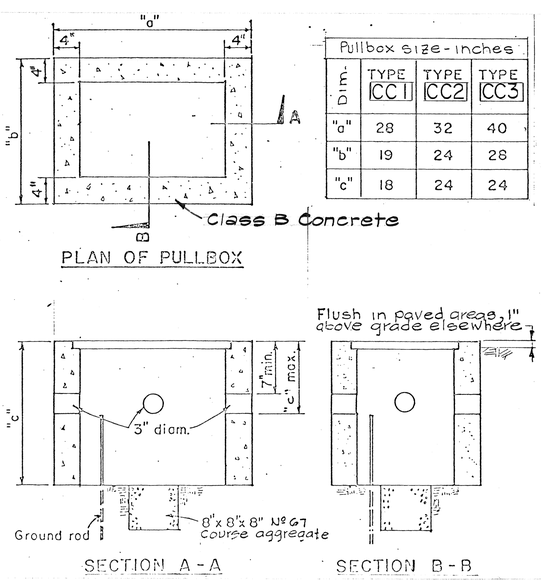

Pullbox size-inches			
DIM.	TYPE CC1	TYPE CC2	TYPE CC3
"a"	28	32	40
"b"	19	24	28
"c"	18	24	24

PULLBOX DETAILS

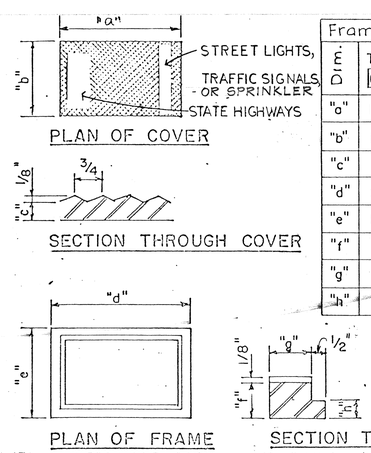

Frame & cover size-inches			
DIM.	TYPE CC1	TYPE CC2	TYPE CC3
"a"	19 3/4	23 1/2	30
"b"	12	15 3/4	20
"c"	1/2	1/2	5/8
"d"	22 1/2	26 1/4	33 3/16
"e"	14 3/4	18 1/2	23 3/13
"f"	1	1	2
"g"	1 1/4	1 1/4	1 1/2
"h"	1/2	1/2	1 3/8

FRAME AND COVER DETAILS

DETAIL 5/E8 - PULLBOX TYPES CC
NOTE: TYPE CC PULLBOX DETAILS ARE SIMILAR TO CITY & COUNTY OF HONOLULU DOTS STANDARD DETAILS

ORIGINAL PLAN	SURVEY PLOTTED BY	DATE
	DRAWN BY	
	TRACED BY	
NOTE BOOK	DESIGNED BY	
	QUANTITIES BY	
No.	CHECKED BY	

M. A. MARSZALOWICZ
REGISTERED PROFESSIONAL ENGINEER
No. 2366
HAWAII, U.S.A.

THIS WORK WAS PREPARED BY ME OR UNDER MY SUPERVISION.
M. A. Marszalowicz

STATE OF HAWAII
DEPARTMENT OF TRANSPORTATION
HIGHWAYS DIVISION
ELECTRICAL DETAILS
PART V
FORT WEAVER ROAD
ROUTE H-1 TO SOUTH OF FARRINGTON HIGHWAY

SCALE: AS SHOWN DATE: AUG. 1978

SHEET No. E8 OF E8 SHEETS

FED. ROAD DIST. NO.	STATE	FED. AID PROJ. NO.	FISCAL YEAR	SHEET NO.	TOTAL SHEETS
HAWAII	HAW.	M7600(1)	1978	C096 S-1	198

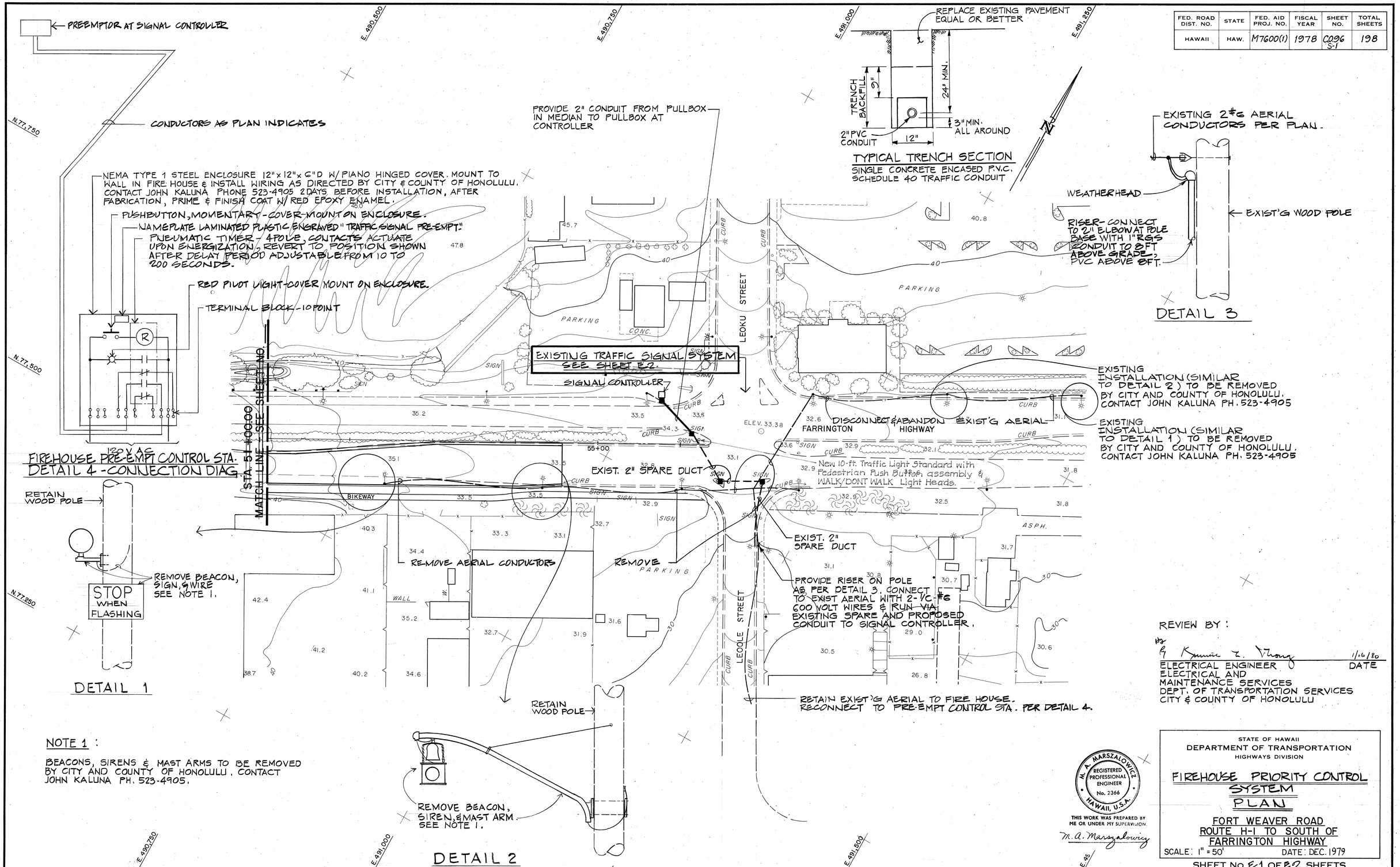

NOTE 1 :

BEACONS, SIRENS & MAST ARMS TO BE REMOVED BY CITY AND COUNTY OF HONOLULU. CONTACT JOHN KALUNA PH. 523-4905.

REVIEW BY :

1/16/80

ELECTRICAL ENGINEER — DATE
ELECTRICAL AND MAINTENANCE SERVICES
DEPT. OF TRANSPORTATION SERVICES
CITY & COUNTY OF HONOLULU

M. A. MARSZALOWICZ
REGISTERED PROFESSIONAL ENGINEER
No. 2366
HAWAII, U.S.A.

THIS WORK WAS PREPARED BY ME OR UNDER MY SUPERVISION.

M. A. Marszalowicz

STATE OF HAWAII
DEPARTMENT OF TRANSPORTATION
HIGHWAYS DIVISION

FIREHOUSE PRIORITY CONTROL SYSTEM
PLAN

FORT WEAVER ROAD
ROUTE H-1 TO SOUTH OF FARRINGTON HIGHWAY

SCALE: 1" = 50' DATE: DEC. 1979

SHEET No. E1 OF E2 SHEETS

C.O. 96S-1

ORIGINAL PLAN
SURVEY PLOTTED BY
DRAWN BY
TRACED BY
NOTE BOOK
DESIGNED BY
QUANTITIES BY
CHECKED BY
No.
DATE

FED. ROAD DIST. NO.	STATE	FED. AID PROJ. NO.	FISCAL YEAR	SHEET NO.	TOTAL SHEETS
HAWAII	HAW.	M7600(1)	1978	C096 S-2	198

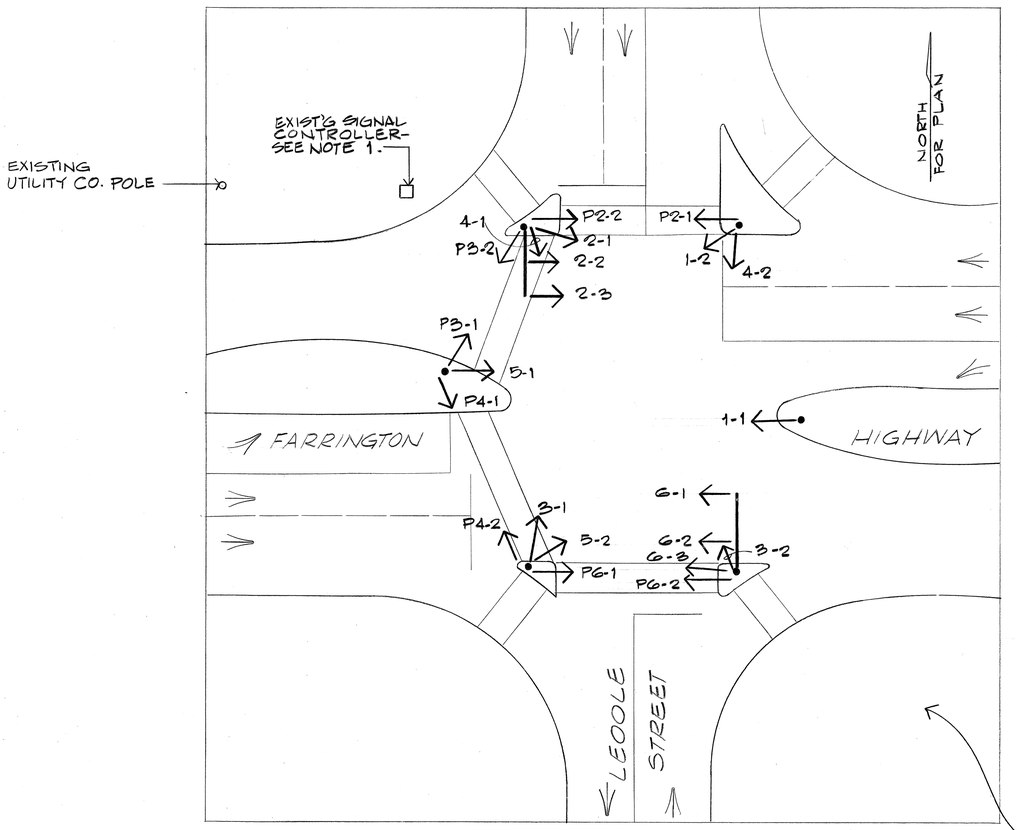

INTERSECTION Nº 1-4 SIGNAL PLAN ∘ 1"=20'

NOTE: ALL FACILITIES ARE EXISTING, REPLACE SIGNALS AS INDICATED

EXISTING SIGNALS

NEW SIGNALS: REMOVE LIKE-NUMBERED EXISTING SIGNALS AND REPLACE WITH NEW SIGNAL OF THE PROGRAMMED VISABILITY TYPE.

BALL SIGNAL (TYP.)

COMBINATION BALL/ARROW SIGNAL.

SIGNAL Nº

R Y ↑	2-1, 2-2, 2-3, 6-1, 6-2, 6-3	2-1, 2-2, 2-3, 6-1, 6-2, 6-3
R Y ←	1-1, 1-2, 5-1, 5-2	1-1, 5-1
R Y G	3-1, 3-2, 4-1, 4-2	
DON'T WALK	P2-1, P2-2, P3-1, P3-2, P4-1, P4-2, P6-1, P6-2	

SIGNAL TYPES

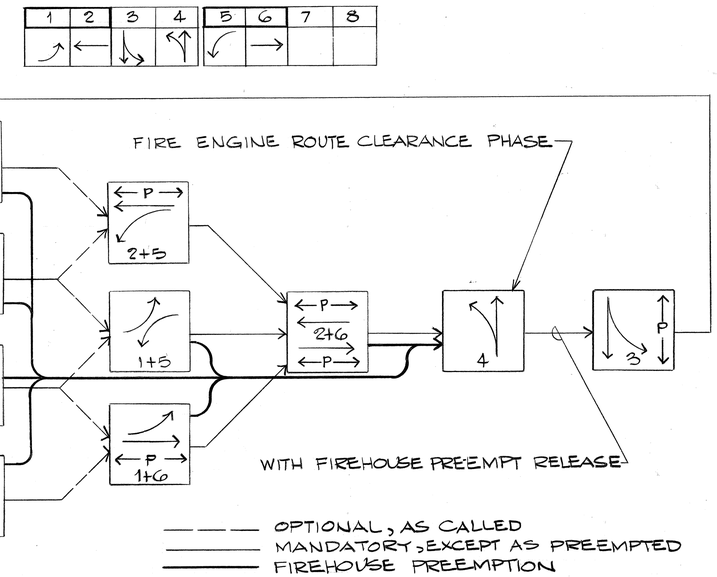

PHASE DIAGRAM

NOTES:

1. REMOVE AND DISPOSE OF EXISTING CONTROLLER AND CABINET. PROVIDE NEW CONTROLLER WITH PRE-EMPTOR IN NEW CONTROLLER CABINET.
2. REMOVE EXISTING 19 c #14 LOOP CONTROL CABLE AND REPLACE WITH 26 c #14 LOOP CONTROL CABLE.
3. COORDINATE ALL SIGNAL WORK WITH CITY & COUNTY OF HONOLULU, DEPARTMENT OF TRANSPORTATION SERVICES.

DATE	REVISION
4-10-80	Revised Note 1. Added Notes 2 & 3.

M. A. MARSZALOWICZ REGISTERED PROFESSIONAL ENGINEER No. 2366 HAWAII, U.S.A.

THIS WORK WAS PREPARED BY ME OR UNDER MY SUPERVISION.

M. A. Marszalowicz

STATE OF HAWAII
DEPARTMENT OF TRANSPORTATION
HIGHWAYS DIVISION

FIREHOUSE PRIORITY CONTROL SYSTEM
DETAILS

FORT WEAVER ROAD
ROUTE H-1 TO SOUTH OF FARRINGTON HIGHWAY

SCALE: AS SHOWN DATE: DEC. 1979

SHEET No. E2 OF E2 SHEETS

C.0.96S-2

ORIGINAL PLAN | NOTE BOOK | No.

SURVEY PLOTTED BY
DRAWN BY
TRACED BY
DESIGNED BY
QUANTITIES BY
CHECKED BY
DATE

FED. ROAD DIST. NO.	STATE	FED. AID PROJ. NO.	FISCAL YEAR	SHEET NO.	TOTAL SHEETS
HAWAII	HAW.	M-7600(1)	1978	97	198

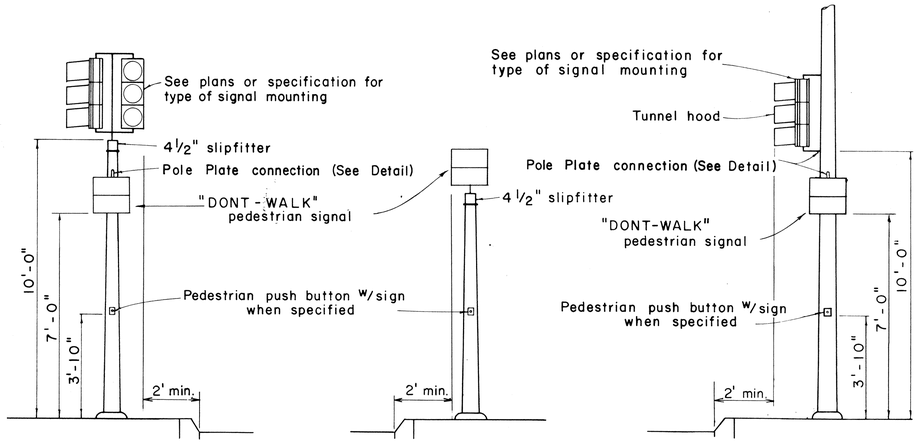

ON 10-FOOT STANDARD

ON 8-FOOT STANDARD WHEN SPECIFIED

ON MAST ARM OR SPAN WIRE STANDARD

TYPICAL EQUIPMENT MOUNTINGS

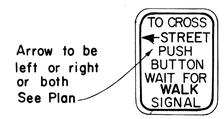

R10-4a(L)
5" x 7"

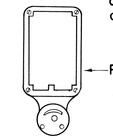

PEDESTRIAN PUSH BUTTON

NOTE:
1. Conduits shall protrude 2" max. above finished surface of foundation.
2. Conduits shall slope away from pole foundation.

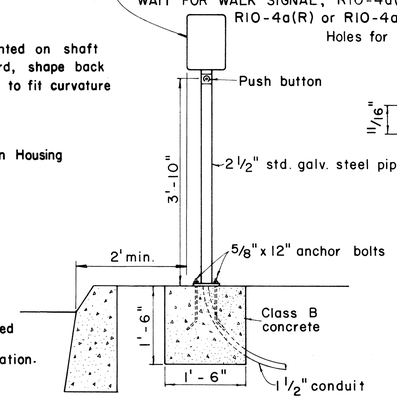

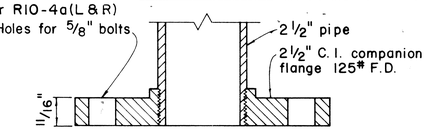

SECTION

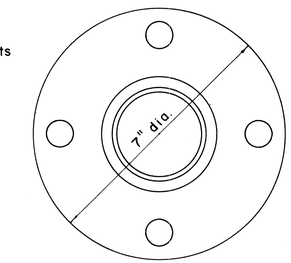

BASE DETAIL

PEDESTRIAN PUSH BUTTON POST AND FOOTING

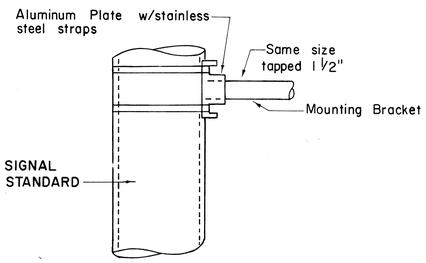

DETAIL OF POLE PLATE CONNECTIONS

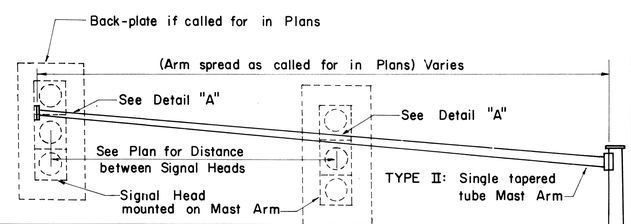

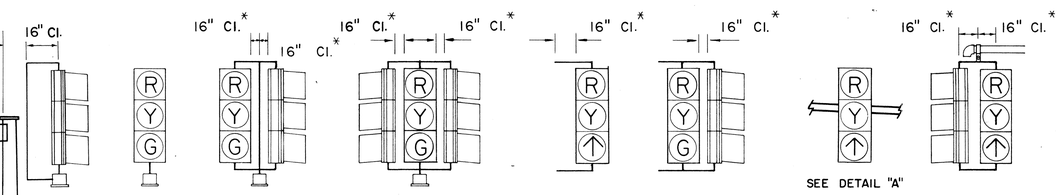

1 way (1 vert.) *IA | 1 way (1 vert.) I | 2 way (2 vert.) II | 3 way (3 vert.) III

SLIPFITTER MOUNTINGS

1 way (1 vert.) IV | 2 way (2 vert.) V

BRACKET MOUNTINGS

1 way (1 vert.) VI | 2 way (2 vert.) VII

MASTARM MOUNTINGS

* Use with Programmed Visibility Signal

TYPICAL VEHICULAR AND PEDESTRIAN SIGNAL MOUNTINGS

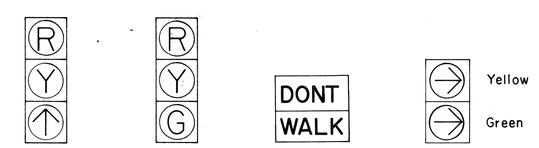

1 - Vertical 3 - Section | 1 - Vertical 3 - Section | 1 - Dont Walk Walk | 1 - Vertical 2 - Section

TYPICAL SIGNAL ARRANGEMENTS

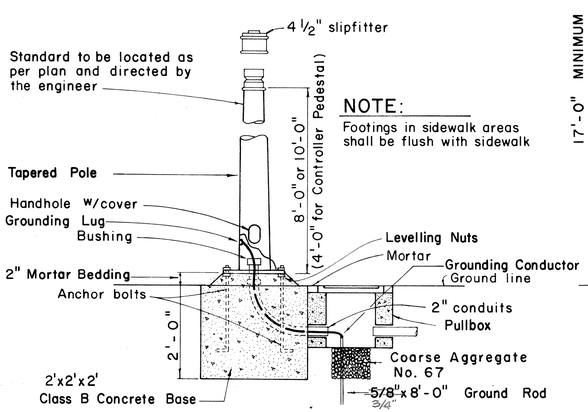

NOTE:
Footings in sidewalk areas shall be flush with sidewalk

TYPE I SIGNAL STANDARD OR CONTROLLER PEDESTAL AND FOOTING

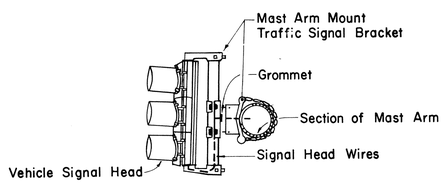

DETAIL "A"

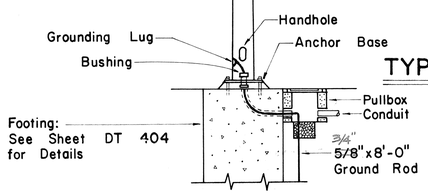

TYPE II MAST ARM AND STANDARD

APPROVAL RECOMMENDED:

Eichi Tanaka — TRAFFIC ENGINEER — 12/29/69 DATE

Edwin E. Sakai — ASSISTANT CHIEF, ENGINEERING — 12/30/69 DATE

NO.	REVISION	APPROVED BY	DATE
1	Revise code nos. for Pedestrian Push Button signs.	H.T.	3/23/72
2	Revise Details of Traffic and Pedestrian Signals, Standards and Pedestrian Push Button and Signs.	H.T.	3/5/76
3	Revise signal indications.	H.T.	9/22/76
4	Remove Note No. 3 & Revise clearance and dimension.	H.T.	9/19/77

STATE OF HAWAII
DEPARTMENT OF TRANSPORTATION
LAND TRANSPORTATION FACILITIES DIVISION

TRAFFIC SIGNAL SYSTEM

MISCELLANEOUS DETAILS

Not to Scale

SHEET No. 1 OF 3 SHEETS DT 400

SURVEY PLOTTED BY
DRAWN BY
TRACED BY
DESIGNED BY
QUANTITIES BY
CHECKED BY
DATE
NOTE BOOK No.

PRINTED ON NO. 1000H CLEARPRINT

FED. ROAD DIST. NO.	STATE	FED. AID PROJ. NO.	FISCAL YEAR	SHEET NO.	TOTAL SHEETS
HAWAII	HAW.	M-7600(1)	1978	98	138

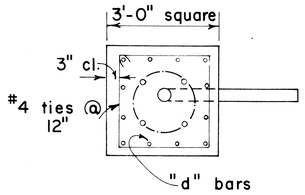

PLAN - SECTION

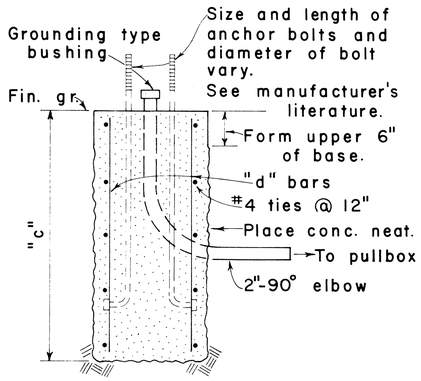

NOTE:

Concrete shall be Class B.

SECTION

MAST ARM LENGTH	"c"	"d" BARS
16' - 18'	5'-0"	12 - #6
20'	5'-6"	12 - #6
25'	6'-0"	12 - #6
30'	6'-6"	12 - #6
35'	7'-0"	12 - #8
40'	8'-0"	12 - #8

TYPE II

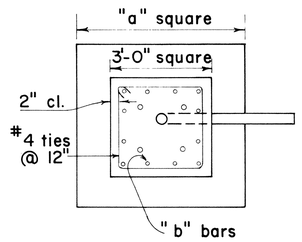

PLAN - SECTION

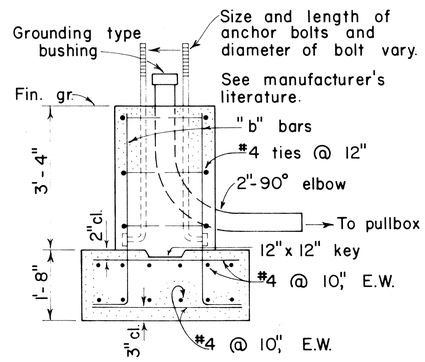

NOTE:

Concrete shall be Class B.

SECTION

MAST ARM LENGTH	"a"	"b" BARS
16' - 18'	5'-0"	12 - #6
20'	5'-6"	12 - #6
25'	6'-0"	12 - #6
30'	6'-6"	12 - #8
35'	6'-6"	12 - #8
40'	7'-0"	12 - #8

TYPE IIA

FOOTING FOR MAST ARM STANDARD

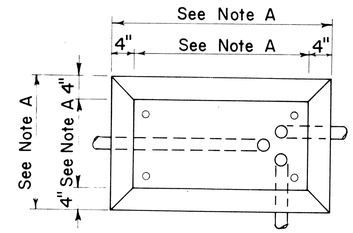

PLAN

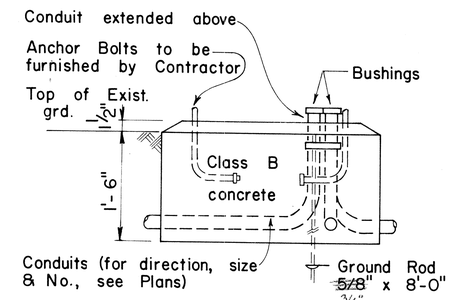

ELEVATION

CONCRETE BASE FOR CONTROLLER CABINET

NOTES:

A. Dimensions to be determined by the size of the Controller Cabinet to be furnished under this Contract.

B. Details of Conduits, Anchor Bolts, etc., are approximate only. Exact details shall be secured by the Contractor from Manufacturer.

APPROVAL RECOMMENDED:

Euichi Tanaka — 3/9/76
TRAFFIC ENGINEER — DATE

APPROVED:

Herbert R. Takeishi — 3-5-76
ASSISTANT CHIEF, ENGINEERING — DATE

NO.	REVISION	APPROVED BY	DATE

STATE OF HAWAII
DEPARTMENT OF TRANSPORTATION
LAND TRANSPORTATION FACILITIES DIVISION

TRAFFIC SIGNAL SYSTEM
MISCELLANEOUS DETAILS

Not to Scale

SHEET No. 2 OF 3 SHEETS DT404

ORIGINAL PLAN — SURVEY PLOTTED BY ___ DRAWN BY ___ TRACED BY ___ DESIGNED BY ___ QUANTITIES BY ___ CHECKED BY ___ DATE ___ NOTE BOOK No. ___

FED. ROAD DIST. NO.	STATE	FED. AID PROJ. NO.	FISCAL YEAR	SHEET NO.	TOTAL SHEETS
HAWAII	HAW.	M-7600(1)	1978	99	198

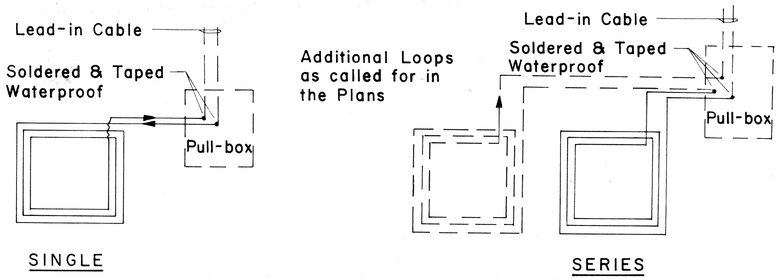

TYPICAL LOOP CONFIGURATIONS

No Scale

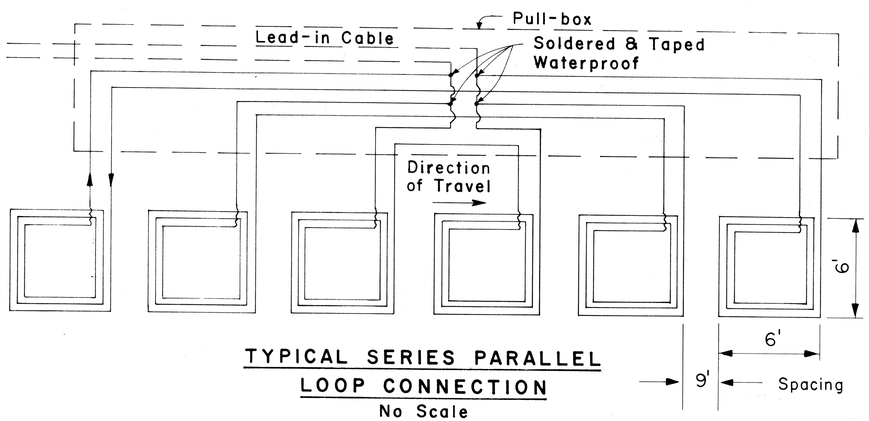

TYPICAL SERIES PARALLEL LOOP CONNECTION

No Scale

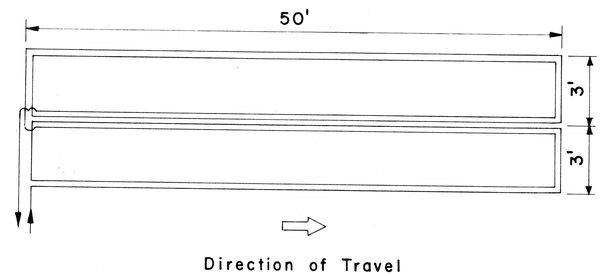

WIRING FOR 6' x 50' LOOP DETECTOR

No Scale

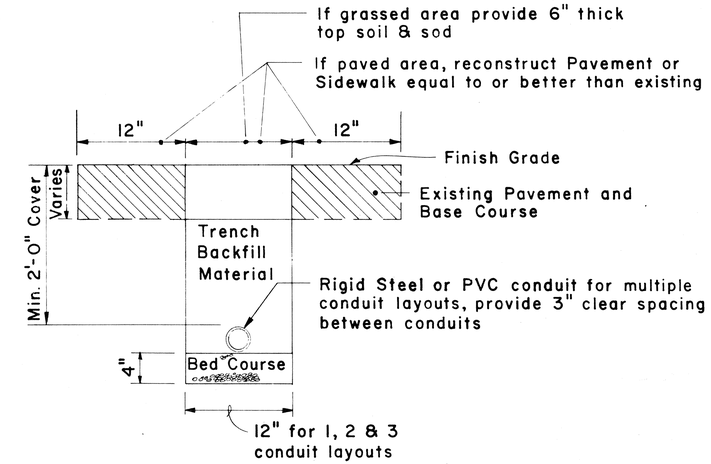

TYPICAL TRENCH SECTION FOR CONDUIT

Scale : 1 1/2" = 1' - 0"

NOTE :

1. All conduits under roadways shall be steel or PVC schedule 80. All other conduits shall be steel or PVC schedule 40.

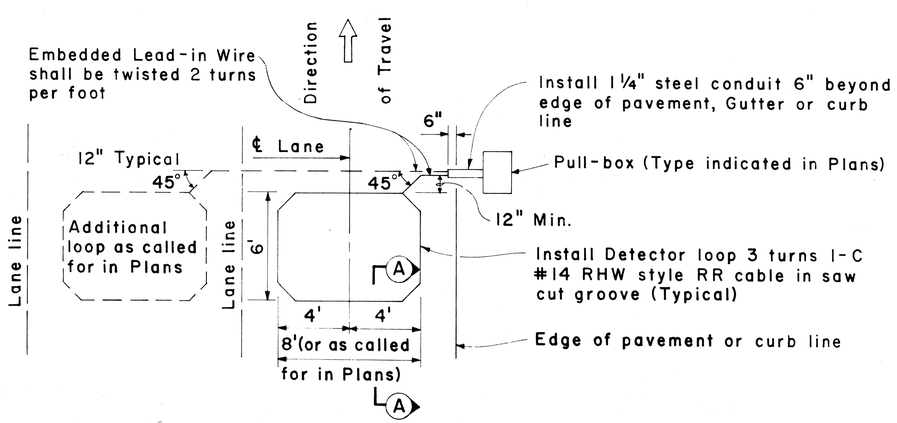

PLAN - MULTIPLE LOOP LAYOUT

Scale : 1/4" = 1' - 0"

DETECTION LOOP

Scale : As Shown

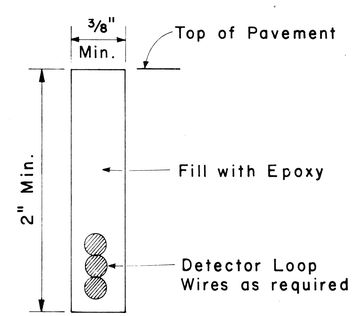

Detector Loop Saw-Cut

SECTION A-A (TYPICAL)

No Scale

APPROVAL RECOMMENDED:

Eiichi Tanaka — TRAFFIC ENGINEER — 3/4/76 DATE

APPROVED:

Herbert Q. Rodrigues — ASSISTANT CHIEF, ENGINEERING — 3-5-76 DATE

NO.	REVISION	APPROVED BY	DATE
1	Add dimensions to Loop Configurations	H.T.	9-22-76

STATE OF HAWAII
DEPARTMENT OF TRANSPORTATION
LAND TRANSPORTATION FACILITIES DIVISION

TRAFFIC SIGNAL SYSTEM MISCELLANEOUS DETAILS

Scale : As Noted

SHEET No. 3 OF 3 SHEETS DT 405

ORIGINAL PLAN | SURVEY PLOTTED BY | TRACED BY | DESIGNED BY | QUANTITIES BY | CHECKED BY | DATE | NOTE BOOK No.