FED. ROAD DIST. NO.	STATE	PROJ. NO.	FISCAL YEAR	SHEET NO.	TOTAL SHEETS
HAWAI'I	HAW.	7101A-01-20	2021	156	767

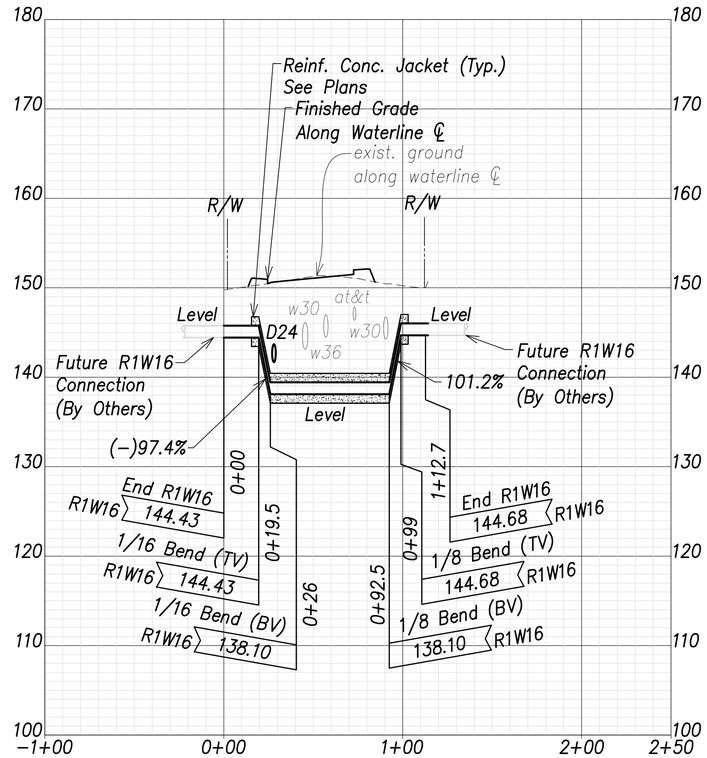

Waterline B Profile
(Sta. 46+71 Farrington Highway)

Scales: Hor.: 1" = 40'
Vert.: 1" = 8'

Graphic Scales:

1" = 40' 40' 20' 0 40' 80'

1" = 8' 8' 4' 0 8' 16'

Scale in Feet

ORIGINAL PLAN	SURVEY PLOTTED BY	DATE
	DRAWN BY	
	TRACED BY	
NOTE BOOK	DESIGNED BY	
	QUANTITIES BY	
No.	CHECKED BY	

APPROVED:

Manager and Chief Engineer, BWS (for work affecting BWS facilities in City/State R/W & BWS easements only) — DATE

CRAIG W. L. LUKE
LICENSED PROFESSIONAL ENGINEER
No. 6935-C
HAWAII, U.S.A.

THIS WORK WAS PREPARED BY ME OR UNDER MY SUPERVISION AND CONSTRUCTION OF THIS PROJECT WILL BE UNDER MY OBSERVATION.

SIGNATURE — April 30, 2022 EXPIRATION DATE OF THE LICENSE

STATE OF HAWAII
DEPARTMENT OF TRANSPORTATION
HIGHWAYS DIVISION

Waterlines Profile – 1

FARRINGTON HIGHWAY WIDENING
Kapolei Golf Course Road to Fort Weaver Road
Project No. 7101A-01-20

Scale: As Shown Date: April 2022

SHEET No. C-155 OF 767 SHEETS

FILE: K:\civil\23146 Farrington Hwy Widening\Dwg\Construction Dwgs\C-155 Water Profiles - 1.dwg saved April 13, 2022

FED. ROAD DIST. NO.	STATE	PROJ. NO.	FISCAL YEAR	SHEET NO.	TOTAL SHEETS
HAWAI'I	HAW.	7101A-01-20	2021	157	767

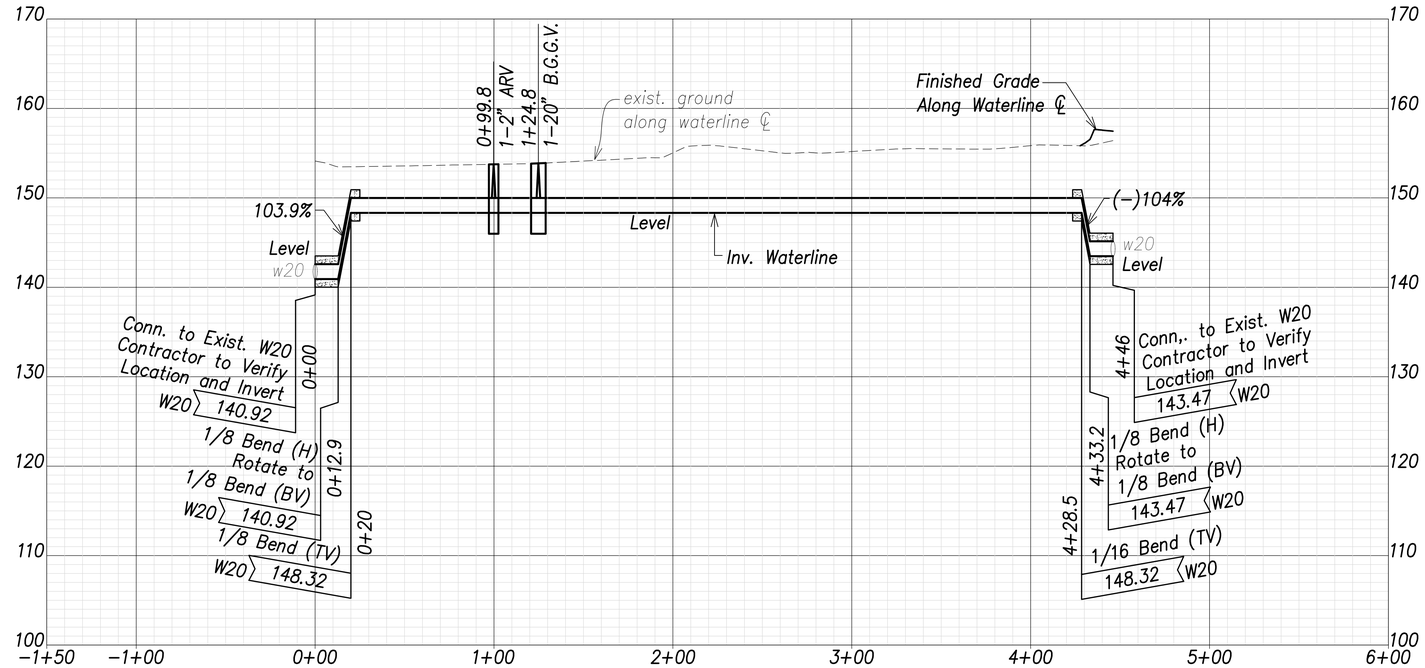

Waterline G Profile
(Sta. 51+89 Farrington Highway)

Scales: Hor.: 1" = 40'
Vert.: 1" = 8'

Graphic Scales:

1" = 40' 40' 20' 0 40' 80'

1" = 8' 8' 4' 0 8' 16'

Scale in Feet

ORIGINAL PLAN	SURVEY PLOTTED BY	DATE
	DRAWN BY	
	TRACED BY	
NOTE BOOK	DESIGNED BY	
	QUANTITIES BY	
No.	CHECKED BY	

Note:
The Contractor shall provide Controlled Low Strength Material (CLSM) in areas where required compaction cannot be met. CLSM shall be extend a minimum of 2' beyond the waterline at the crossing and shall extend to the top of the crossing pipe

APPROVED:

Manager and Chief Engineer, BWS (for work affecting BWS facilities in City/State R/W & BWS easements only) — DATE

CRAIG W. L. LUKE
LICENSED PROFESSIONAL ENGINEER
No. 6935-C
HAWAII, U.S.A.

THIS WORK WAS PREPARED BY ME OR UNDER MY SUPERVISION AND CONSTRUCTION OF THIS PROJECT WILL BE UNDER MY OBSERVATION.

SIGNATURE — EXPIRATION DATE OF THE LICENSE: April 30, 2022

STATE OF HAWAII
DEPARTMENT OF TRANSPORTATION
HIGHWAYS DIVISION

Waterlines Profile – 2

FARRINGTON HIGHWAY WIDENING
Kapolei Golf Course Road to Fort Weaver Road
Project No. 7101A-01-20

Scale: As Shown — Date: April 2022

SHEET No. C-156 OF 767 SHEETS

FILE: K:\civil\23146 Farrington Hwy Widening\Dwg\Construction Dwgs\C-156 Water Profiles - 2.dwg saved April 13, 2022

FED. ROAD DIST. NO.	STATE	PROJ. NO.	FISCAL YEAR	SHEET NO.	TOTAL SHEETS
HAWAI'I	HAW.	7101A-01-20	2021	158	767

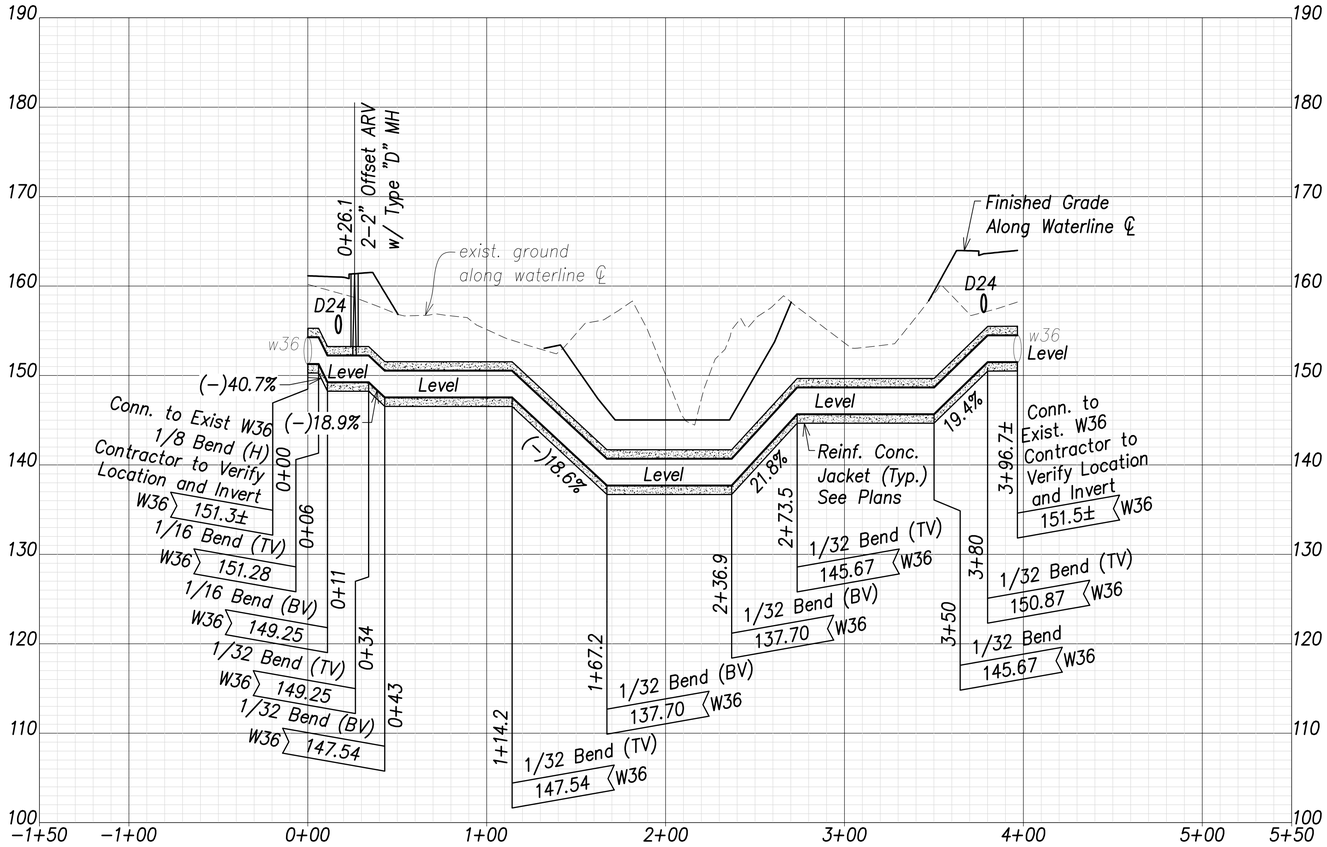

Waterline H Profile
(Sta. 61+78.5 Farrington Highway)

Scales: Hor.: 1" = 40'
Vert.: 1" = 8'

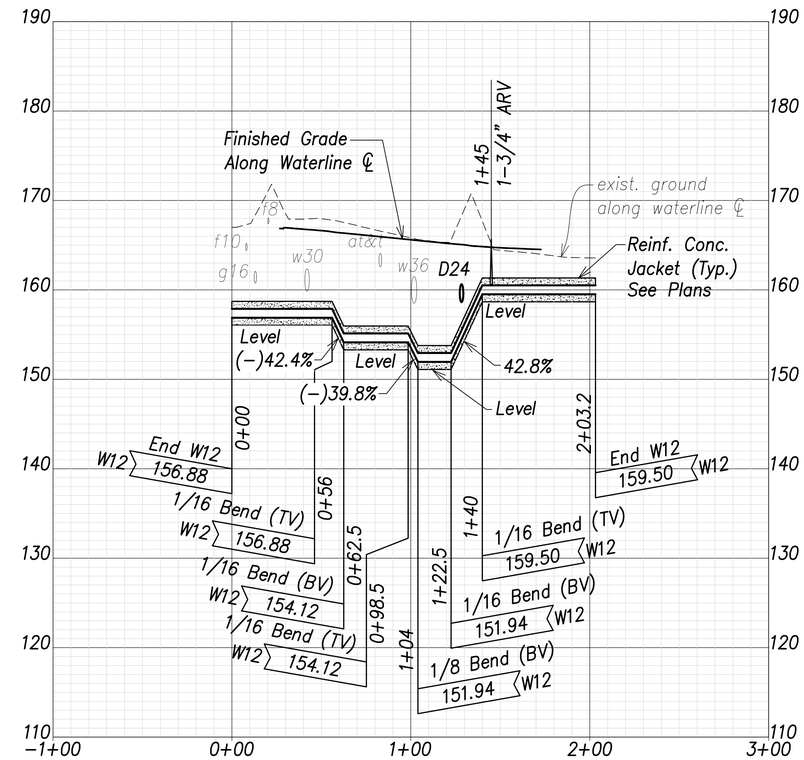

Waterline J Profile
(Sta. 72+91 Farrington Highway)

Scales: Hor.: 1" = 40'
Vert.: 1" = 8'

Graphic Scales:

1" = 40' 40' 20' 0 40' 80'

1" = 8' 8' 4' 0 8' 16'

Scale in Feet

ORIGINAL PLAN	SURVEY PLOTTED BY	DATE
	DRAWN BY	
	TRACED BY	
NOTE BOOK	DESIGNED BY	
	QUANTITIES BY	
No.	CHECKED BY	

APPROVED:

Manager and Chief Engineer, BWS (for work affecting BWS facilities in City/State R/W & BWS easements only) — DATE

CRAIG W. L. LUKE
LICENSED PROFESSIONAL ENGINEER
No. 6935-C
HAWAII, U.S.A.

THIS WORK WAS PREPARED BY ME OR UNDER MY SUPERVISION AND CONSTRUCTION OF THIS PROJECT WILL BE UNDER MY OBSERVATION.

SIGNATURE — April 30, 2022 EXPIRATION DATE OF THE LICENSE

STATE OF HAWAII
DEPARTMENT OF TRANSPORTATION
HIGHWAYS DIVISION

Waterlines Profile – 3

FARRINGTON HIGHWAY WIDENING
Kapolei Golf Course Road to Fort Weaver Road
Project No. 7101A-01-20

Scale: As Shown — Date: April 2022

SHEET No. C-157 OF 767 SHEETS

FILE: K:\Civil\23146 Farrington Hwy Widening\Dwg\Construction Dwgs\C-157 Water Profiles - 3.dwg saved April 13, 2022

FED. ROAD DIST. NO.	STATE	PROJ. NO.	FISCAL YEAR	SHEET NO.	TOTAL SHEETS
HAWAI'I	HAW.	7101A-01-20	2021	159	767

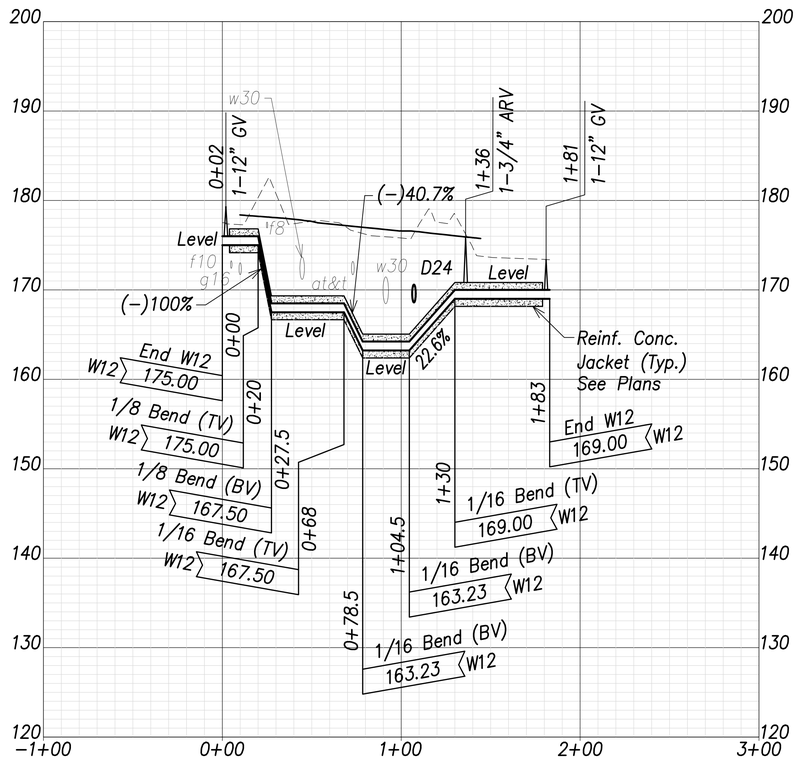

Waterline K Profile (Sta. 98+71 Farrington Highway)

Scales: Hor.: 1" = 40'
Vert.: 1" = 8'

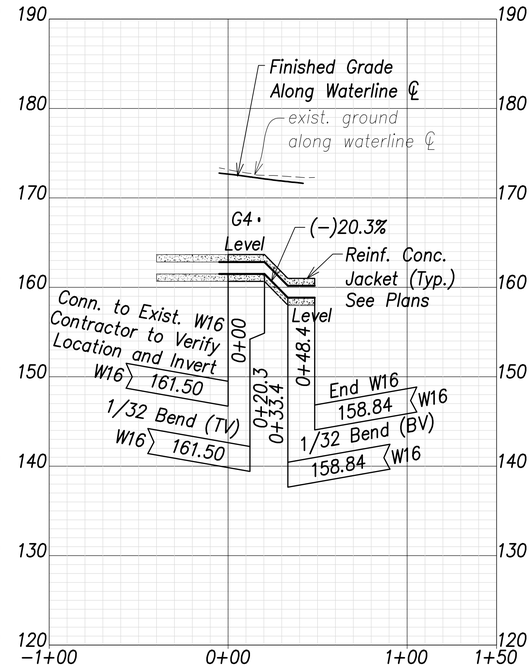

Waterline L Profile (Sta. 112+29 Farrington Highway)

Scales: Hor.: 1" = 40'
Vert.: 1" = 8'

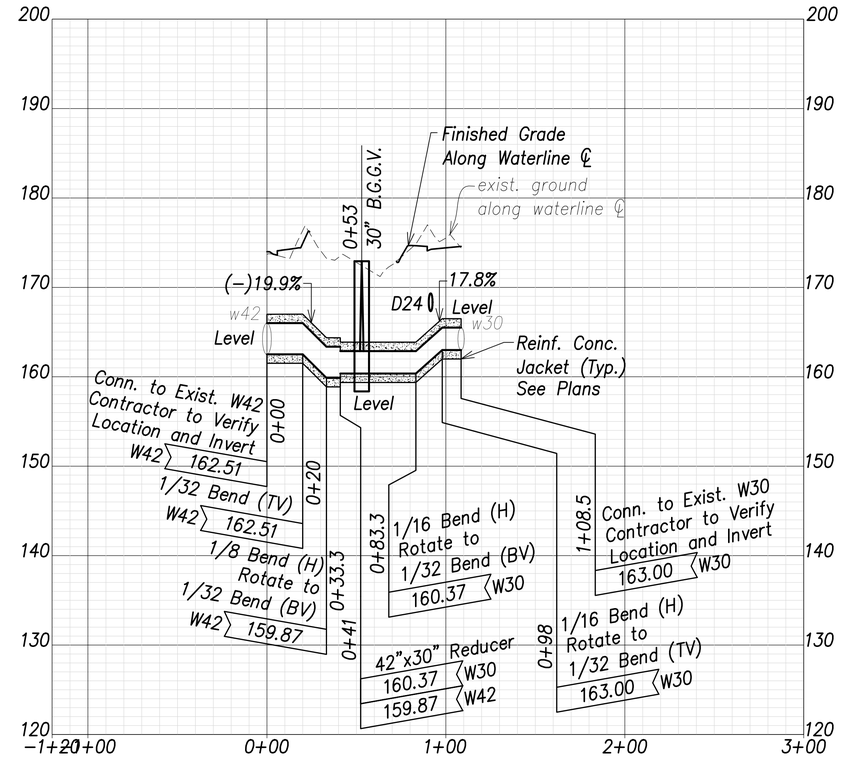

Waterline M Profile (Sta. 113+32.7 Farrington Highway)

Scales: Hor.: 1" = 40'
Vert.: 1" = 8'

Graphic Scales:

1" = 40' 40' 20' 0 40' 80'

1" = 8' 8' 4' 0 8' 16'

Scale in Feet

APPROVED:

Manager and Chief Engineer, BWS (for work affecting BWS facilities in City/State R/W & BWS easements only) DATE

Note:
The Contractor shall provide Controlled Low Strength Material (CLSM) in areas where required compaction cannot be met. CLSM shall be extend a minimum of 2' beyond the waterline at the crossing and shall extend to the top of the crossing pipe

CRAIG W. L. LUKE
LICENSED PROFESSIONAL ENGINEER
No. 6935-C
HAWAII, U.S.A.

THIS WORK WAS PREPARED BY ME OR UNDER MY SUPERVISION AND CONSTRUCTION OF THIS PROJECT WILL BE UNDER MY OBSERVATION.

SIGNATURE — April 30, 2022 EXPIRATION DATE OF THE LICENSE

STATE OF HAWAII
DEPARTMENT OF TRANSPORTATION
HIGHWAYS DIVISION

Waterlines Profile – 4

FARRINGTON HIGHWAY WIDENING
Kapolei Golf Course Road to Fort Weaver Road
Project No. 7101A–01–20

Scale: As Shown Date: April 2022

SHEET No. C-158 OF 767 SHEETS

ORIGINAL PLAN | SURVEY PLOTTED BY | DRAWN BY | TRACED BY | DESIGNED BY | QUANTITIES BY | CHECKED BY | DATE | NOTE BOOK No.

FILE: K:\Civil\23146 Farrington Hwy Widening\Dwg\Construction Dwgs\C-158 Water Profiles - 4.dwg saved April 13, 2022

FED. ROAD DIST. NO.	STATE	PROJ. NO.	FISCAL YEAR	SHEET NO.	TOTAL SHEETS
HAWAI'I	HAW.	7101A-01-20	2021	160	767

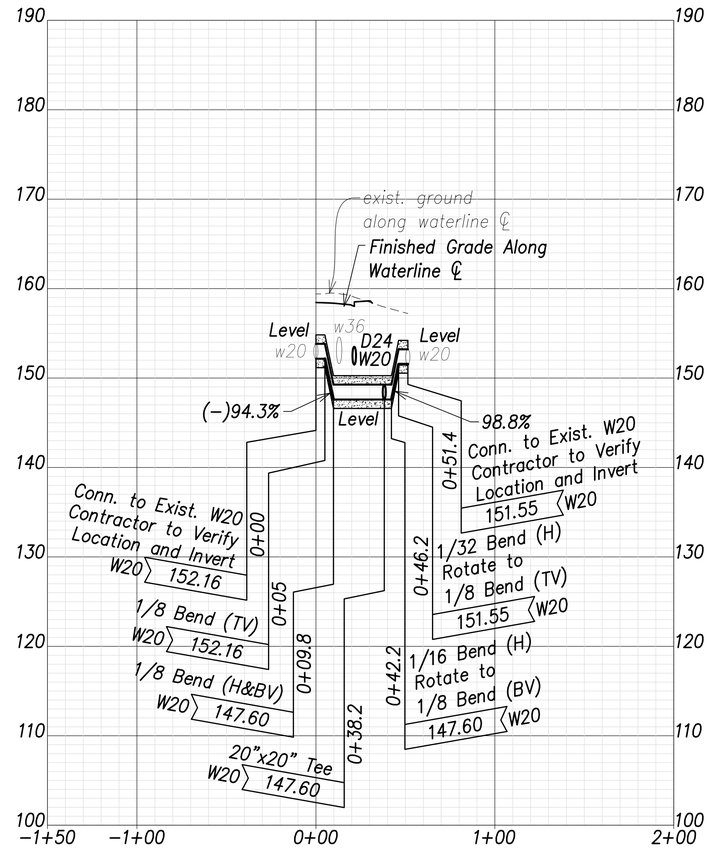

Waterline P Profile
(Sta. 58+67.5 Farrington Highway)

Scales: Hor.: 1" = 40'
Vert.: 1" = 8'

Graphic Scales:

1" = 40' 40' 20' 0 40' 80'

1" = 8' 8' 4' 0 8' 16'

Scale in Feet

ORIGINAL PLAN	SURVEY PLOTTED BY	DATE
	SURVEY BY	"
	TRACED BY	"
NOTE BOOK	DESIGNED BY	"
	QUANTITIES BY	"
No.	CHECKED BY	"

Note:
The Contractor shall provide Controlled Low Strength Material (CLSM) in areas where required compaction cannot be met. CLSM shall be extend a minimum of 2' beyond the waterline at the crossing and shall extend to the top of the crossing pipe

APPROVED:

Manager and Chief Engineer, BWS (for work affecting BWS facilities in City/State R/W & BWS easements only) — DATE

CRAIG W. L. LUKE
LICENSED PROFESSIONAL ENGINEER
No. 6935-C
HAWAII, U.S.A.

THIS WORK WAS PREPARED BY ME OR UNDER MY SUPERVISION AND CONSTRUCTION OF THIS PROJECT WILL BE UNDER MY OBSERVATION.

SIGNATURE — April 30, 2022 EXPIRATION DATE OF THE LICENSE

STATE OF HAWAII
DEPARTMENT OF TRANSPORTATION
HIGHWAYS DIVISION

Waterlines Profile – 5

FARRINGTON HIGHWAY WIDENING
Kapolei Golf Course Road to Fort Weaver Road
Project No. 7101A-01-20

Scale: As Shown — Date: April 2022

SHEET No. C-159 OF 767 SHEETS

FILE: K:\civil\23146 Farrington Hwy Widening\Dwg\Construction Dwgs\C-159 Water Profiles - 5.dwg saved April 13, 2022

FED. ROAD DIST. NO.	STATE	PROJ. NO.	FISCAL YEAR	SHEET NO.	TOTAL SHEETS
HAWAI'I	HAW.	7101A-01-20	2021	161	767

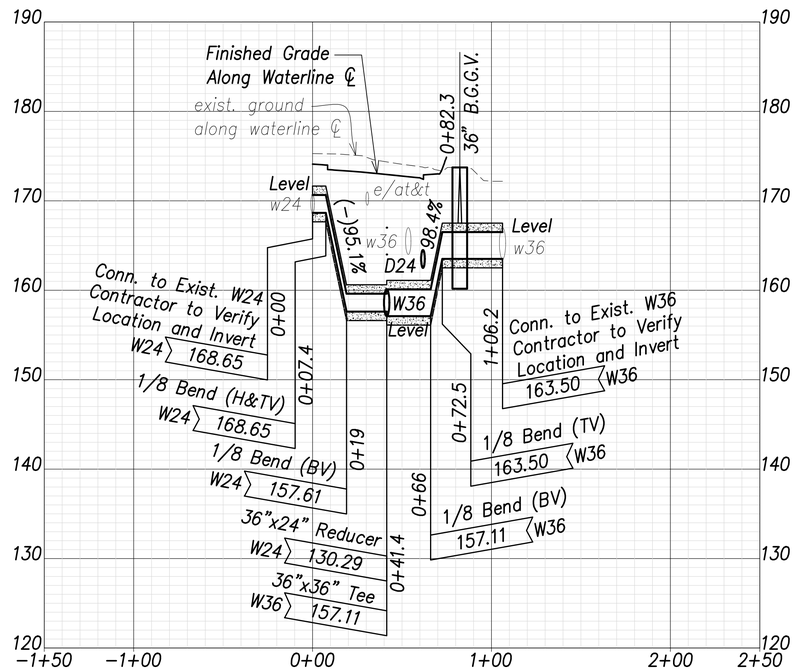

Waterline Q Profile (Sta. 110+03 Farrington Highway)

Scales: Hor.: 1" = 40'
Vert.: 1" = 8'

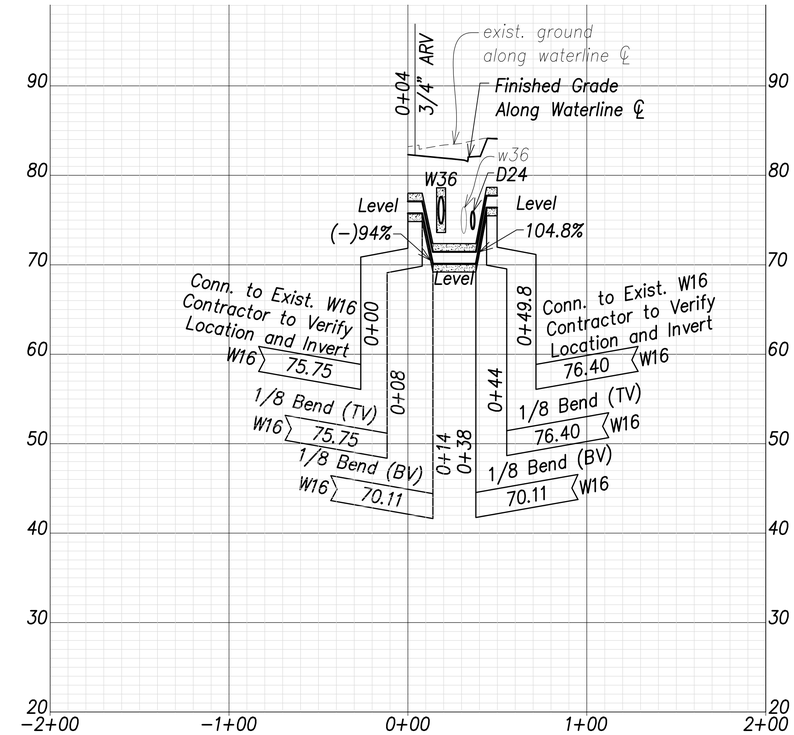

Waterline R Profile (Sta. 158+90 Farrington Highway)

Scales: Hor.: 1" = 40'
Vert.: 1" = 8'

Graphic Scales:

1" = 40' 40' 20' 0 40' 80'

1" = 8' 8' 4' 0 8' 16'

Scale in Feet

ORIGINAL PLAN	SURVEY PLOTTED BY	DATE
	DRAWN BY	
	TRACED BY	
NOTE BOOK	DESIGNED BY	
	QUANTITIES BY	
No.	CHECKED BY	

Note:
The Contractor shall provide Controlled Low Strength Material (CLSM) in areas where required compaction cannot be met. CLSM shall be extend a minimum of 2' beyond the waterline at the crossing and shall extend to the top of the crossing pipe

APPROVED:

Manager and Chief Engineer, BWS (for work affecting BWS facilities in City/State R/W & BWS easements only) — DATE

CRAIG W. L. LUKE
LICENSED PROFESSIONAL ENGINEER
No. 6935-C
HAWAII, U.S.A.

THIS WORK WAS PREPARED BY ME OR UNDER MY SUPERVISION AND CONSTRUCTION OF THIS PROJECT WILL BE UNDER MY OBSERVATION.

SIGNATURE — April 30, 2022 EXPIRATION DATE OF THE LICENSE

STATE OF HAWAII
DEPARTMENT OF TRANSPORTATION
HIGHWAYS DIVISION

Waterlines Profile – 6

FARRINGTON HIGHWAY WIDENING
Kapolei Golf Course Road to Fort Weaver Road
Project No. 7101A–01–20

Scale: As Shown — Date: April 2022

SHEET No. C-160 OF 767 SHEETS

FILE: K:\civil\23146 Farrington Hwy Widening\Dwg\Construction Dwgs\C-160 Water Profiles - 6.dwg saved April 13, 2022

FED. ROAD DIST. NO.	STATE	PROJ. NO.	FISCAL YEAR	SHEET NO.	TOTAL SHEETS
HAWAI'I	HAW.	7101A-01-20	2021	162	767

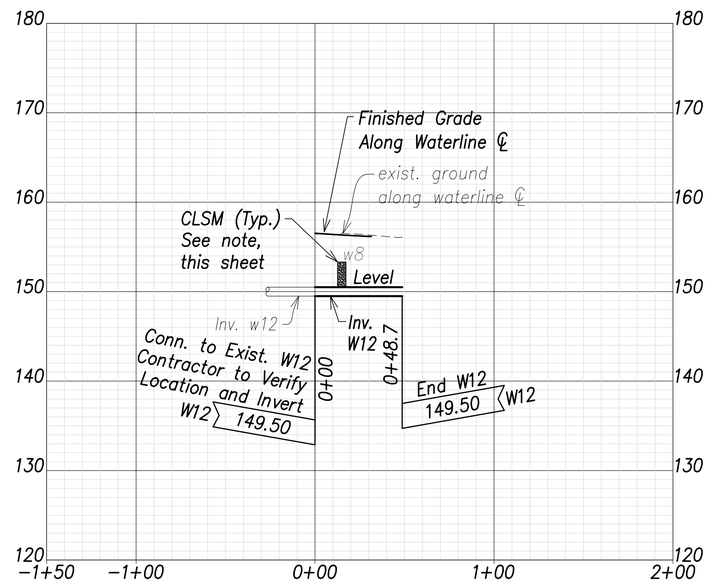

Waterline S Profile (Sta. 129+63.8 Farrington Highway)

Scales: Hor.: 1" = 40'
Vert.: 1" = 8'

Graphic Scales:

1" = 40' 40' 20' 0 40' 80'

1" = 8' 8' 4' 0 8' 16'

Scale in Feet

Note:
The Contractor shall provide Controlled Low Strength Material (CLSM) in areas where required compaction cannot be met. CLSM shall be extend a minimum of 2' beyond the waterline at the crossing and shall extend to the top of the crossing pipe

APPROVED:

Manager and Chief Engineer, BWS (for work affecting BWS facilities in City/State R/W & BWS easements only) — DATE

CRAIG W. L. LUKE
LICENSED PROFESSIONAL ENGINEER
No. 6935-C
HAWAII, U.S.A.

THIS WORK WAS PREPARED BY ME OR UNDER MY SUPERVISION AND CONSTRUCTION OF THIS PROJECT WILL BE UNDER MY OBSERVATION.

SIGNATURE — EXPIRATION DATE OF THE LICENSE: April 30, 2022

STATE OF HAWAII
DEPARTMENT OF TRANSPORTATION
HIGHWAYS DIVISION

Waterlines Profile – 7

FARRINGTON HIGHWAY WIDENING
Kapolei Golf Course Road to Fort Weaver Road
Project No. 7101A-01-20

Scale: As Shown — Date: April 2022

SHEET No. C-161 OF 767 SHEETS

ORIGINAL PLAN	SURVEY PLOTTED BY	DATE
	DRAWN BY	
	TRACED BY	
NOTE BOOK	DESIGNED BY	
	QUANTITIES BY	
No.	CHECKED BY	

FILE: K:\civil\23146 Farrington Hwy Widening\Dwg\Construction Dwgs\C-161 Water Profiles - 7.dwg saved April 13, 2022

FED. ROAD DIST. NO.	STATE	PROJ. NO.	FISCAL YEAR	SHEET NO.	TOTAL SHEETS
HAWAI'I	HAW.	7101A-01-20	2021	163	767

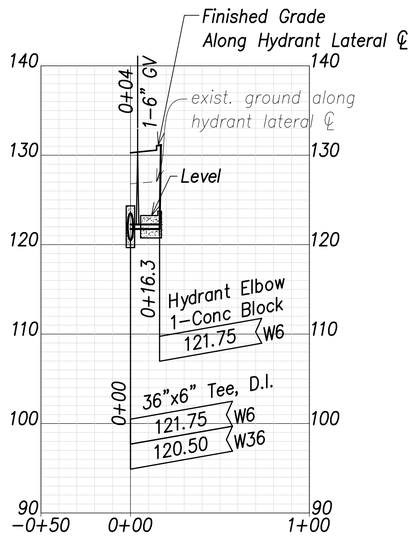

Fire Hydrant – 1
(Sta. 11+00 Farrington Highway)

Scales: Hor.: 1" = 40'
Vert.: 1" = 8'

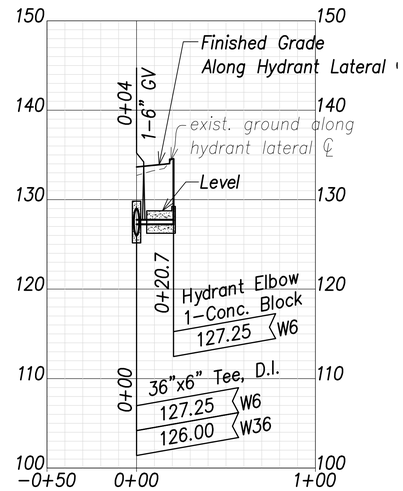

Fire Hydrant – 2
(Sta. 23+58.6 Farrington Highway)

Scales: Hor.: 1" = 40'
Vert.: 1" = 8'

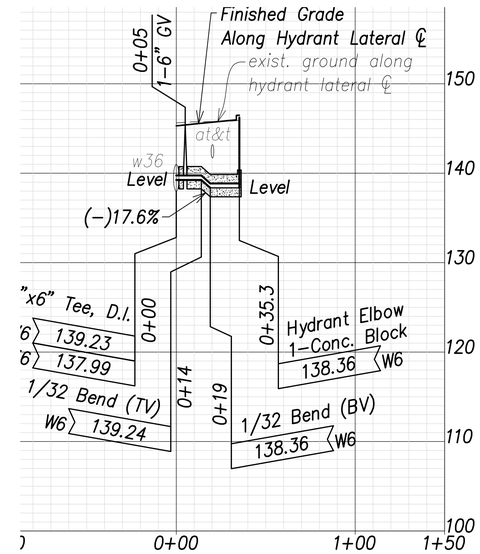

Fire Hydrant – 3
(Sta. 43+00 Farrington Highway)

Scales: Hor.: 1" = 40'
Vert.: 1" = 8'

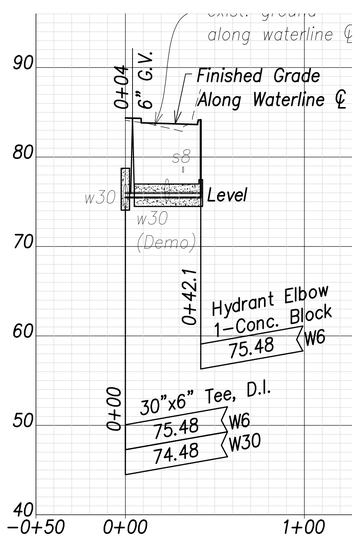

Fire Hydrant – 4
(Sta. 159+00 Farrington Highway)

Scales: Hor.: 1" = 40'
Vert.: 1" = 8'

Graphic Scales:

1" = 40' 40' 20' 0 40' 80'

1" = 8' 8' 4' 0 8' 16'

Scale in Feet

ORIGINAL PLAN	SURVEY PLOTTED BY	DATE
	DRAWN BY	
	TRACED BY	
NOTE BOOK	DESIGNED BY	
	QUANTITIES BY	
No.	CHECKED BY	

APPROVED:

Manager and Chief Engineer, BWS (for work affecting BWS facilities in City/State R/W & BWS easements only) — DATE

CRAIG W. L. LUKE
LICENSED PROFESSIONAL ENGINEER
No. 6935-C
HAWAII, U.S.A.

THIS WORK WAS PREPARED BY ME OR UNDER MY SUPERVISION AND CONSTRUCTION OF THIS PROJECT WILL BE UNDER MY OBSERVATION.

SIGNATURE — April 30, 2022 EXPIRATION DATE OF THE LICENSE

STATE OF HAWAII
DEPARTMENT OF TRANSPORTATION
HIGHWAYS DIVISION

Fire Hydrant Profiles

FARRINGTON HIGHWAY WIDENING
Kapolei Golf Course Road to Fort Weaver Road
Project No. 7101A-01-20

Scale: As Shown — Date: April 2022

SHEET No. C-162 OF 767 SHEETS

FILE: K:\civil\23146 Farrington Hwy Widening\Dwg\Construction Dwgs\C-162 Fire Hydrant Profiles.dwg saved April 13, 2022

FED. ROAD DIST. NO.	STATE	PROJ. NO.	FISCAL YEAR	SHEET NO.	TOTAL SHEETS
HAWAI'I	HAW.	7101A-01-20	2021	164	767

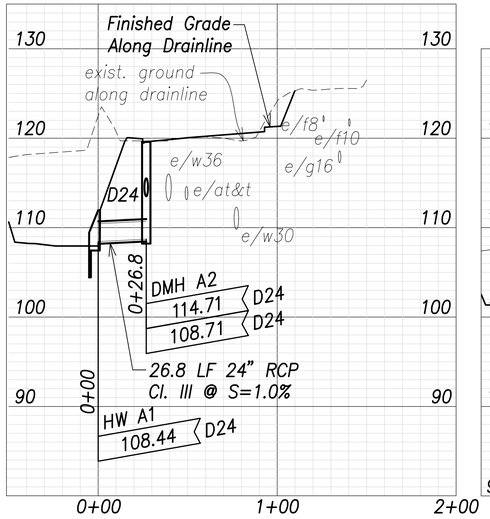

Drain Profile at 2+72.5

Scales: Hor.: 1" = 40'
Vert.: 1" = 8'

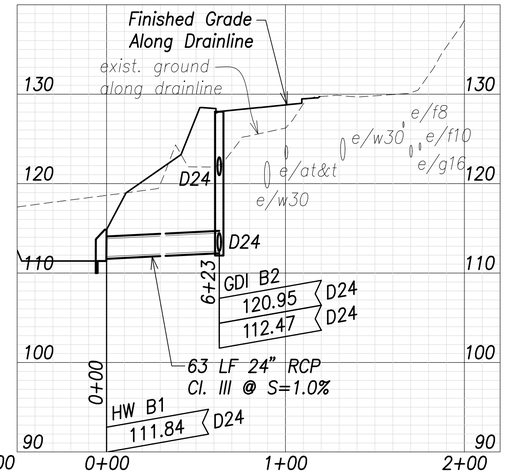

Drain Profile at 14+98

Scales: Hor.: 1" = 40'
Vert.: 1" = 8'

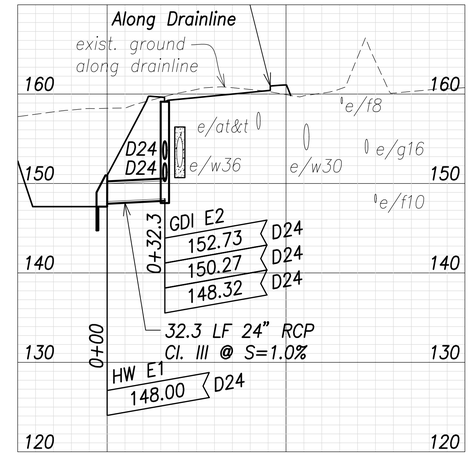

Drain Profile at 59+98.2

Scales: Hor.: 1" = 40'
Vert.: 1" = 8'

Note:
The Contractor shall provide Controlled Low Strength Material (CLSM) in areas where required compaction cannot be met. CLSM shall be extend a minimum of 2' beyond the waterline at the crossing and shall extend to the top of the crossing pipe

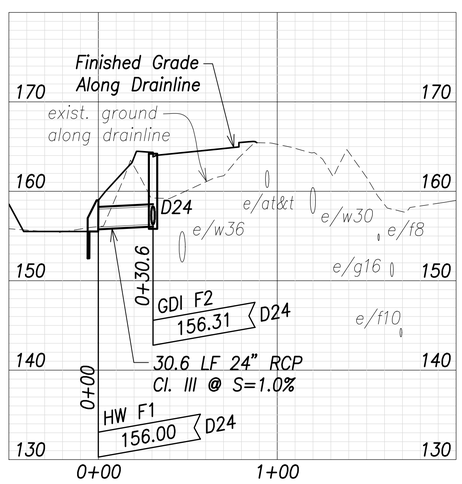

Drain Profile at 65+60.3

Scales: Hor.: 1" = 40'
Vert.: 1" = 8'

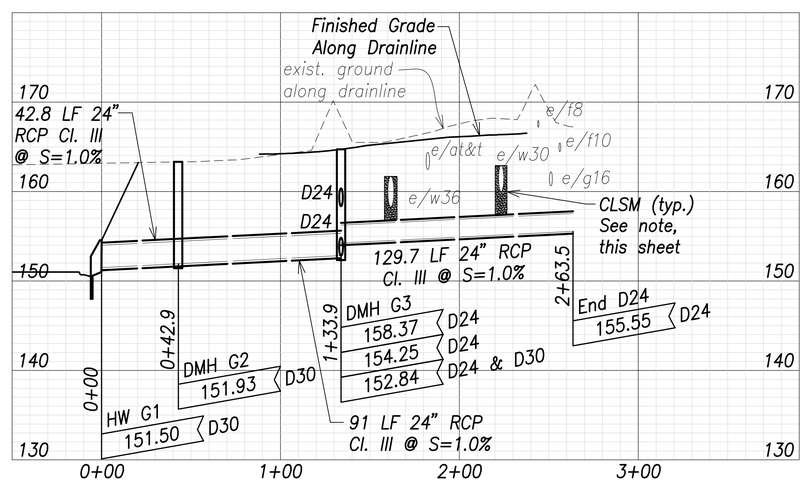

Drain Profile at 73+30

Scales: Hor.: 1" = 40'
Vert.: 1" = 8'

Graphic Scales:

1" = 40' 40' 20' 0 40' 80'

1" = 8' 8' 4' 0 8' 16'

Scale in Feet

APPROVED:

Manager and Chief Engineer, BWS (for work affecting BWS facilities State R/W & BWS easements only) — DATE

CRAIG W. L. LUKE
LICENSED PROFESSIONAL ENGINEER
No. 6935-C
HAWAII, U.S.A.

THIS WORK WAS PREPARED BY ME OR UNDER MY SUPERVISION AND CONSTRUCTION OF THIS PROJECT WILL BE UNDER MY OBSERVATION.

SIGNATURE — April 30, 2022 EXPIRATION DATE OF THE LICENSE

STATE OF HAWAII
DEPARTMENT OF TRANSPORTATION
HIGHWAYS DIVISION

Drain Profiles – 1

FARRINGTON HIGHWAY WIDENING
Kapolei Golf Course Road to Fort Weaver Road
Project No. 7101A-01-20

Scale: As Shown — Date: April 2022

SHEET No. C-163 OF 767 SHEETS

ORIGINAL PLAN	SURVEY PLOTTED BY	DATE
	DRAWN BY	
	TRACED BY	
NOTE BOOK	DESIGNED BY	
	QUANTITIES BY	
No.	CHECKED BY	

FILE: K:\civil\23146 Farrington Hwy Widening\Dwg\Construction Dwgs\C-163 Drain Profiles - 1.dwg saved April 13, 2022

FED. ROAD DIST. NO.	STATE	PROJ. NO.	FISCAL YEAR	SHEET NO.	TOTAL SHEETS
HAWAI'I	HAW.	7101A-01-20	2021	165	767

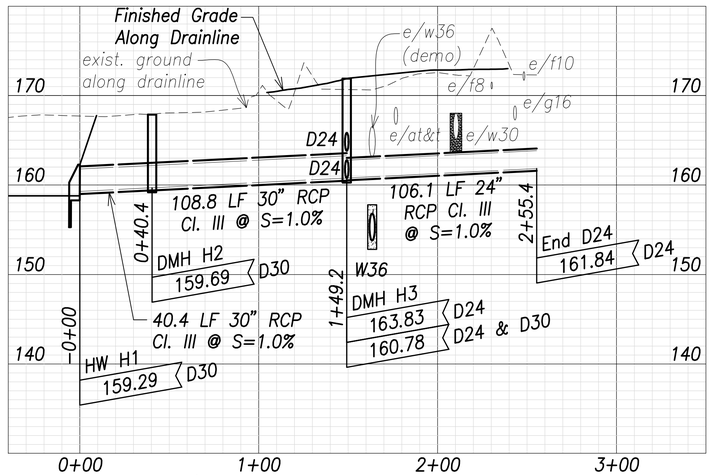

Drain Profile at HW H1 and at 86+68.5

Scales: Hor.: 1" = 40'
Vert.: 1" = 8'

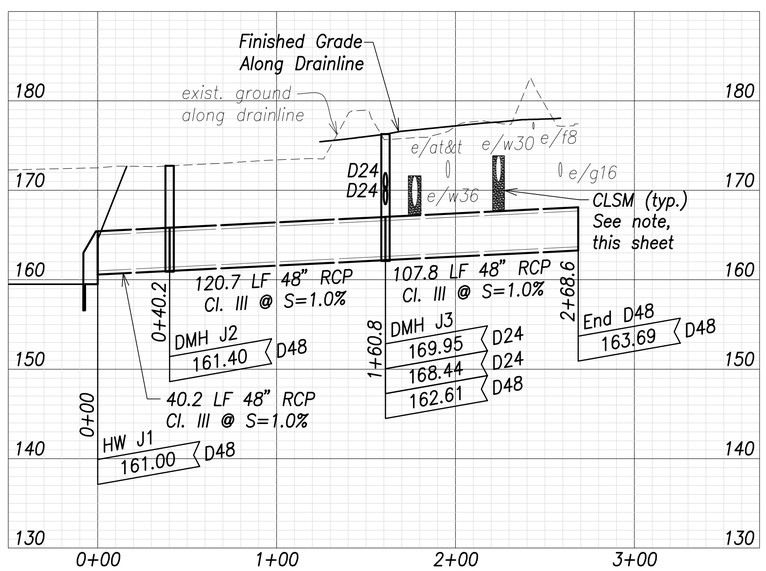

Drain Profile at 98+69.8

Scales: Hor.: 1" = 40'
Vert.: 1" = 8'

Note:
The Contractor shall provide Controlled Low Strength Material (CLSM) in areas where required compaction cannot be met. CLSM shall be extend a minimum of 2' beyond the waterline at the crossing and shall extend to the top of the crossing pipe

Graphic Scales:

1" = 40' 40' 20' 0 40' 80'

1" = 8' 8' 4' 0 8' 16'

Scale in Feet

ORIGINAL PLAN	SURVEY PLOTTED BY	DATE
	SURVEY BY	
	TRACED BY	
NOTE BOOK	DESIGNED BY	
	QUANTITIES BY	
No.	CHECKED BY	

APPROVED:

Manager and Chief Engineer, BWS (for work affecting BWS facilities State R/W & BWS easements only) — DATE

CRAIG W. L. LUKE
LICENSED PROFESSIONAL ENGINEER
No. 6935-C
HAWAII, U.S.A.

THIS WORK WAS PREPARED BY ME OR UNDER MY SUPERVISION AND CONSTRUCTION OF THIS PROJECT WILL BE UNDER MY OBSERVATION.

SIGNATURE — April 30, 2022 EXPIRATION DATE OF THE LICENSE

STATE OF HAWAII
DEPARTMENT OF TRANSPORTATION
HIGHWAYS DIVISION

Drain Profiles – 2

FARRINGTON HIGHWAY WIDENING
Kapolei Golf Course Road to Fort Weaver Road
Project No. 7101A-01-20

Scale: As Shown — Date: April 2022

SHEET No. C-164 OF 767 SHEETS

FILE: K:\civil\23146 Farrington Hwy Widening\Dwg\Construction Dwgs\C-164 Drain Profiles - 2.dwg saved April 13, 2022

FED. ROAD DIST. NO.	STATE	PROJ. NO.	FISCAL YEAR	SHEET NO.	TOTAL SHEETS
HAWAI'I	HAW.	7101A-01-20	2021	166	767

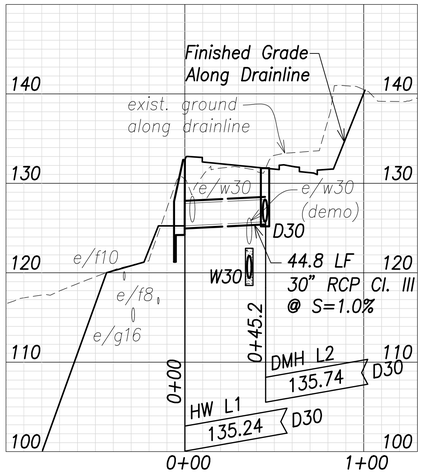

Drain Profile at 135+00

Scales: Hor.: 1" = 40'
Vert.: 1" = 8'

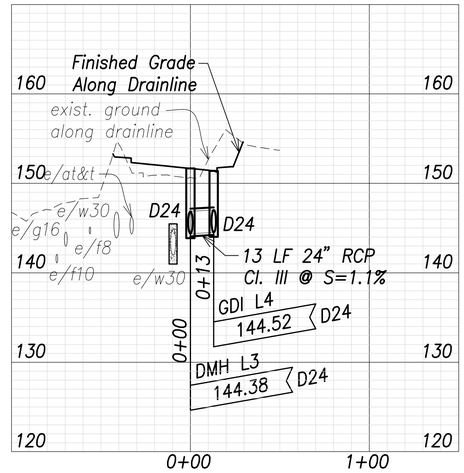

Drain Profile at 132+52.6

Scales: Hor.: 1" = 40'
Vert.: 1" = 8'

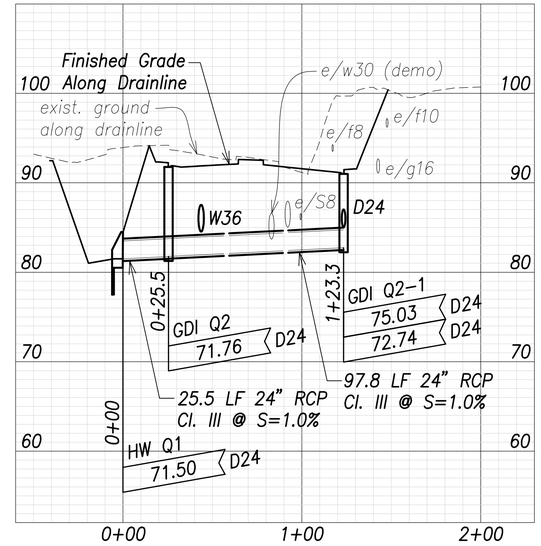

Drain Profile at HW Q1 to GDI Q2-1

Scales: Hor.: 1" = 40'
Vert.: 1" = 8'

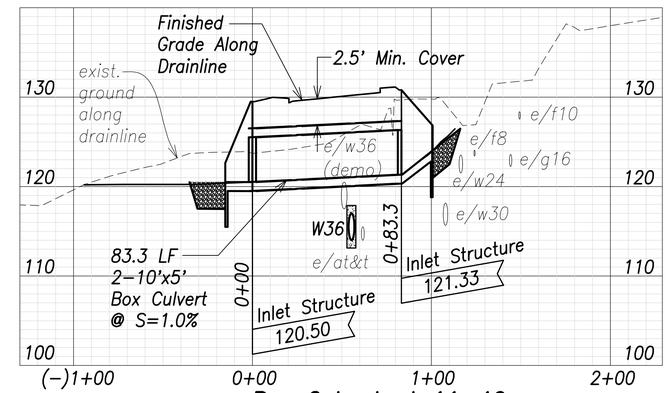

Box Culvert at 11+46

Scales: Hor.: 1" = 40'
Vert.: 1" = 8'

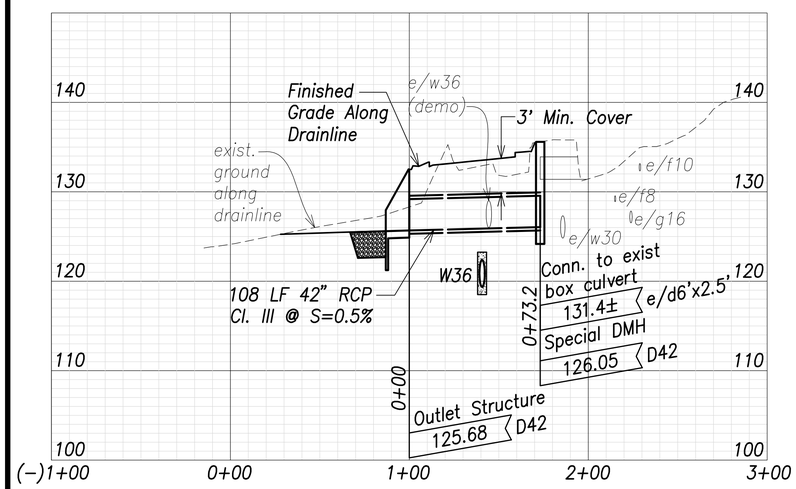

Box Culvert at 23+36

Scales: Hor.: 1" = 40'
Vert.: 1" = 8'

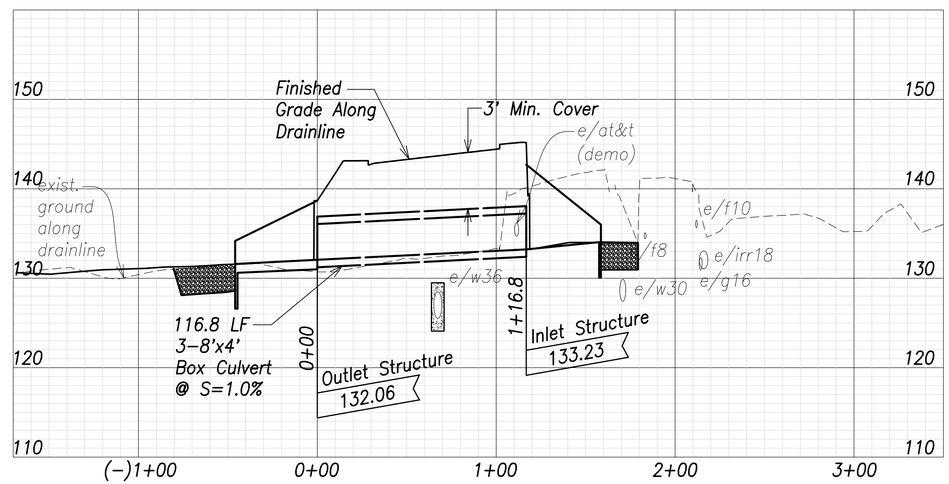

Box Culvert at 33+90

Scales: Hor.: 1" = 40'
Vert.: 1" = 8'

Graphic Scales:

1" = 40' 40' 20' 0 40' 80'

1" = 8' 8' 4' 0 8' 16'

Scale in Feet

Note:
The Contractor shall provide Controlled Low Strength Material (CLSM) in areas where required compaction cannot be met. CLSM shall be extend a minimum of 2' beyond the waterline at the crossing and shall extend to the top of the crossing pipe

ORIGINAL PLAN	SURVEY PLOTTED BY	DATE
	DRAWN BY	
	TRACED BY	
NOTE BOOK	DESIGNED BY	
	QUANTITIES BY	
No.	CHECKED BY	

CRAIG W. L. LUKE
LICENSED PROFESSIONAL ENGINEER
No. 6935-C
HAWAII, U.S.A.

THIS WORK WAS PREPARED BY ME OR UNDER MY SUPERVISION AND CONSTRUCTION OF THIS PROJECT WILL BE UNDER MY OBSERVATION.

SIGNATURE — April 30, 2022 EXPIRATION DATE OF THE LICENSE

STATE OF HAWAII
DEPARTMENT OF TRANSPORTATION
HIGHWAYS DIVISION

Drain Profiles – 3

FARRINGTON HIGHWAY WIDENING
Kapolei Golf Course Road to Fort Weaver Road
Project No. 7101A-01-20

Scale: As Shown Date: April 2022

SHEET No. C-165 OF 767 SHEETS

FILE: \\RMTC-FS\Iproject\civil\23146 Farrington Hwy Widening\Dwg\Construction Dwgs\C-165 Drain Profiles - 3.dwg saved April 13, 2022

FED. ROAD DIST. NO.	STATE	PROJ. NO.	FISCAL YEAR	SHEET NO.	TOTAL SHEETS
HAWAI'I	HAW.	7101A-01-20	2021	167	767

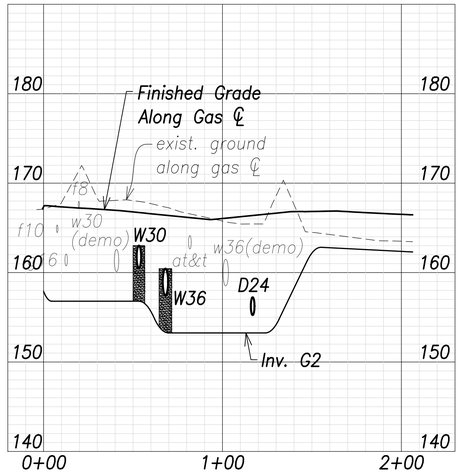

6" Gas Profile at 73+07.6

Scales: Hor.: 1" = 40'
Vert.: 1" = 8'

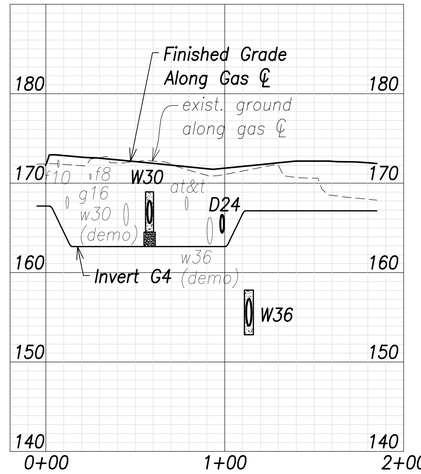

4" Gas Profile at 86+28.8

Scales: Hor.: 1" = 40'
Vert.: 1" = 8'

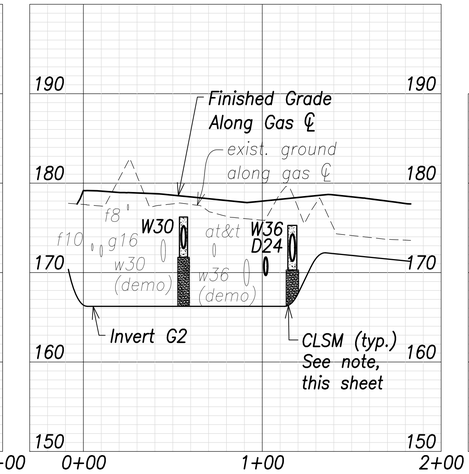

2" Gas Profile at 98+88.8

Scales: Hor.: 1" = 40'
Vert.: 1" = 8'

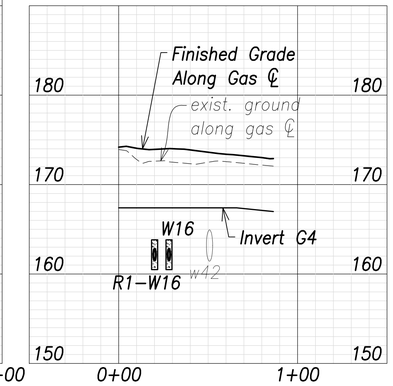

4" Gas Profile at 112+15.2

Scales: Hor.: 1" = 40'
Vert.: 1" = 8'

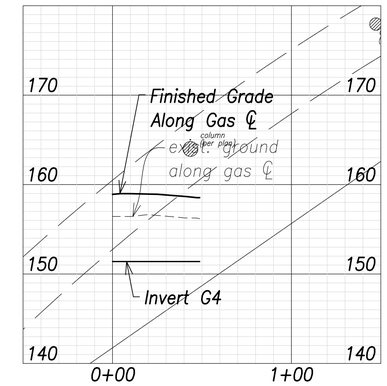

4" Gas Profile at 129+25.7

Scales: Hor.: 1" = 40'
Vert.: 1" = 8'

Note:
The Contractor shall provide Controlled Low Strength Material (CLSM) in areas where required compaction cannot be met. CLSM shall be extend a minimum of 2' beyond the waterline at the crossing and shall extend to the top of the crossing pipe

Graphic Scales:

1" = 40' 40' 20' 0 40' 80'

1" = 8' 8' 4' 0 8' 16'

Scale in Feet

ORIGINAL PLAN	SURVEY PLOTTED BY	DATE
	DRAWN BY	
	TRACED BY	
NOTE BOOK	DESIGNED BY	
	QUANTITIES BY	
No.	CHECKED BY	

APPROVED:

Manager and Chief Engineer, BWS (for work affecting BWS facilities State R/W & BWS easements only) — DATE

CRAIG W. L. LUKE
LICENSED PROFESSIONAL ENGINEER
No. 6935-C
HAWAII, U.S.A.

THIS WORK WAS PREPARED BY ME OR UNDER MY SUPERVISION AND CONSTRUCTION OF THIS PROJECT WILL BE UNDER MY OBSERVATION.

SIGNATURE — EXPIRATION DATE OF THE LICENSE: April 30, 2022

STATE OF HAWAII
DEPARTMENT OF TRANSPORTATION
HIGHWAYS DIVISION

Gas Profiles

FARRINGTON HIGHWAY WIDENING
Kapolei Golf Course Road to Fort Weaver Road
Project No. 7101A-01-20

Scale: As Shown — Date: April 2022

FILE: K:\civil\23146 Farrington Hwy Widening\Dwg\Construction Dwgs\C-166 Gas Profiles.dwg saved April 13, 2022

FED. ROAD DIST. NO.	STATE	PROJ. NO.	FISCAL YEAR	SHEET NO.	TOTAL SHEETS
HAWAI'I	HAW.	7101A-01-20	2021	C168	767

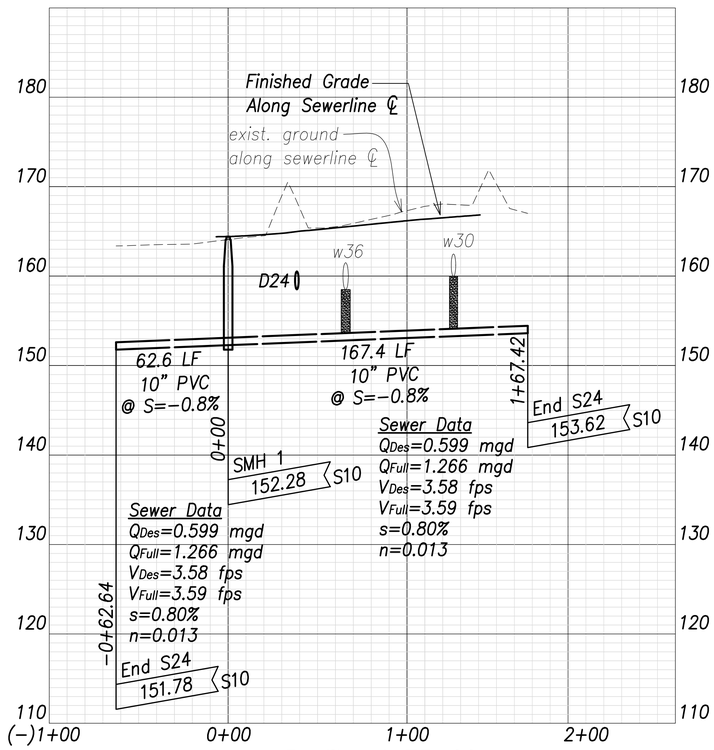

Sewer Profile at 73+00

Scales: Hor.: 1" = 40'
Vert.: 1" = 8'

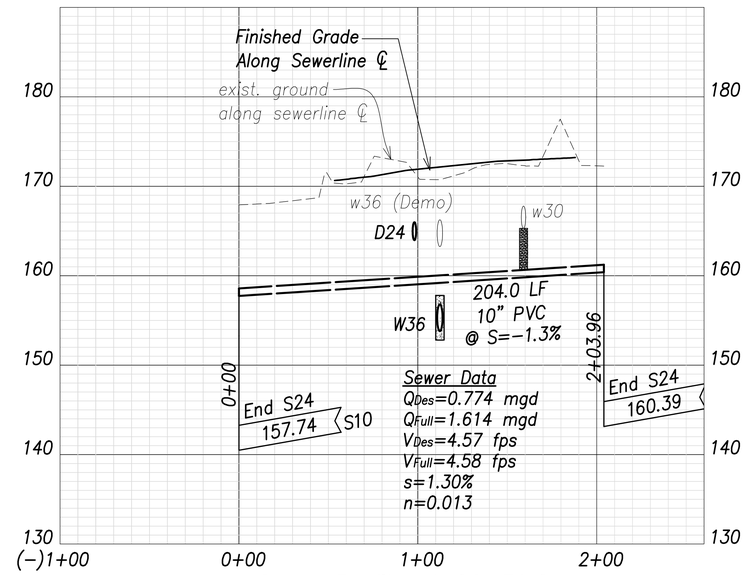

Sewer Profile at 86+39.8

Scales: Hor.: 1" = 40'
Vert.: 1" = 8'

Graphic Scales:

1" = 40' 40' 20' 0 40' 80'

1" = 8' 8' 4' 0 8' 16'

Scale in Feet

Note:
The Contractor shall provide Controlled Low Strength Material (CLSM) in areas where required compaction cannot be met. CLSM shall be extend a minimum of 2' beyond the waterline at the crossing and shall extend to the top of the crossing pipe

APPROVED:

Manager and Chief Engineer, BWS (for work affecting BWS facilities State R/W & BWS easements only) — DATE

CRAIG W. L. LUKE
LICENSED PROFESSIONAL ENGINEER
No. 6935-C
HAWAII, U.S.A.

THIS WORK WAS PREPARED BY ME OR UNDER MY SUPERVISION AND CONSTRUCTION OF THIS PROJECT WILL BE UNDER MY OBSERVATION.

SIGNATURE — April 30, 2022 EXPIRATION DATE OF THE LICENSE

STATE OF HAWAII
DEPARTMENT OF TRANSPORTATION
HIGHWAYS DIVISION

Sewer Profiles

FARRINGTON HIGHWAY WIDENING
Kapolei Golf Course Road to Fort Weaver Road
Project No. 7101A-01-20

Scale: As Shown — Date: April 2022

SHEET No. C-167 OF 767 SHEETS

ORIGINAL PLAN	SURVEY PLOTTED BY	DATE
	TRACED BY	
NOTE BOOK	DESIGNED BY	
No.	QUANTITIES BY	
	CHECKED BY	

FILE: K:\civil\23146 Farrington Hwy Widening\Dwg\Construction Dwgs\C-167 Sewer Profiles.dwg saved April 13, 2022

FED. ROAD DIST. NO.	STATE	PROJ. NO.	FISCAL YEAR	SHEET NO.	TOTAL SHEETS
HAWAII	HAW.	7101A-01-20	2021	169	767

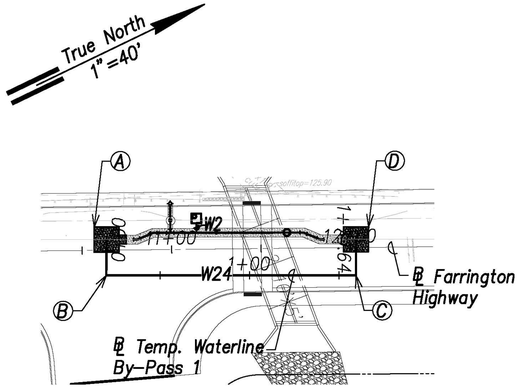

Temporary Waterline By-Pass 1 Plan
(℄ Sta. 10+80.7 Farrington Highway)
(℄ Sta. 11+87.1 Farrington Highway)

Scale: 1" = 40'

(A) ℄ Sta. 10+63.7, o/s 5.9' Lt. Farrington Highway
=℄ Sta. 0+00 By-Pass
Temporary By-Pass Connection
See Detail Shts. C-208 to C-211 (Typ.)

(B) ℄ Sta. 10+63.3, o/s 14' Rt. Farrington Highway
=℄ Sta. 0+20 By-Pass
1-24" 1/4 Bend 5

(C) ℄ Sta. 12+02.9, o/s 15.5' Rt. Farrington Highway
=℄ Sta. 1+59.5 By-Pass
1-24" 1/4 Bend 5

(D) ℄ Sta. 12+03, o/s 4.6' Lt. Farrington Highway
=℄ Sta. 1+79.6 By-Pass
Temporary By-Pass Connection
See Detail Shts. C-208 to C-211 (Typ.)

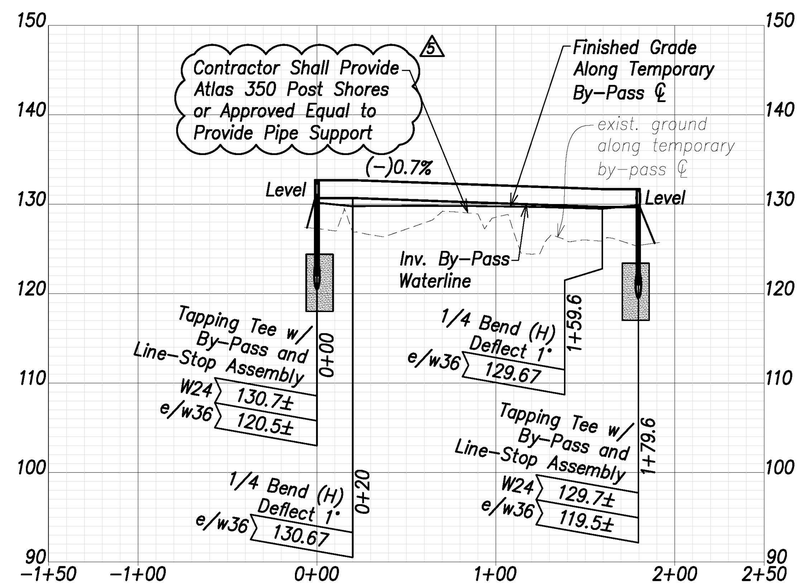

Temporary Waterline By-Pass 1 Profile

Scales: Hor.: 1" = 40'
Vert.: 1" = 8'

Notes:

1. Contractor shall provide mechanical joint pipes and fittings with retainer glands and/or flanged pipes and fittings to construct the temporary by-passes 5
2. The Contractor shall submit the construction schedule and construction phasing for the temporary by-passes to BWS for review and approval. The Contractor shall not commence work on the temporary by-passes until approval is obtained by BWS.

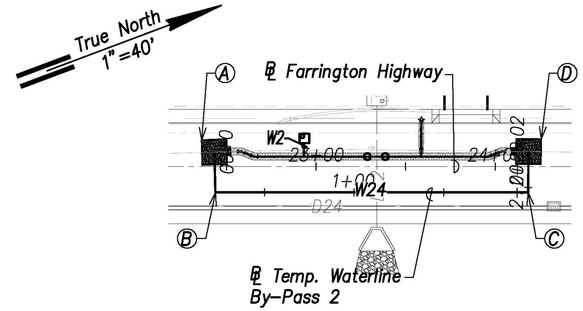

Temporary Waterline By-Pass 2 Plan
(℄ Sta. 22+58.1 Farrington Highway)
(℄ Sta. 24+05 Farrington Highway)

Scale: 1" = 40'

(A) ℄ Sta. 22+43.1, o/s 8' Lt. Farrington Highway
=℄ Sta. 0+00 By-Pass
Temporary By-Pass Connection
See Detail Shts. C-208 to C-211 (Typ.)

(B) ℄ Sta. 22+43.7, o/s 14.5' Rt. Farrington Highway
=℄ Sta. 0+22.5 By-Pass
1-24" 1/4 Bend 5

(C) ℄ Sta. 24+18.4, o/s 14.5' Rt. Farrington Highway
=℄ Sta. 1+97.2 By-Pass
1-24" 1/4 Bend 5

(D) ℄ Sta. 24+18.7, o/s 8.3' Lt. Farrington Highway
=℄ Sta. 2+20 By-Pass
Temporary By-Pass Connection
See Detail Shts. C-208 to C-211 (Typ.)

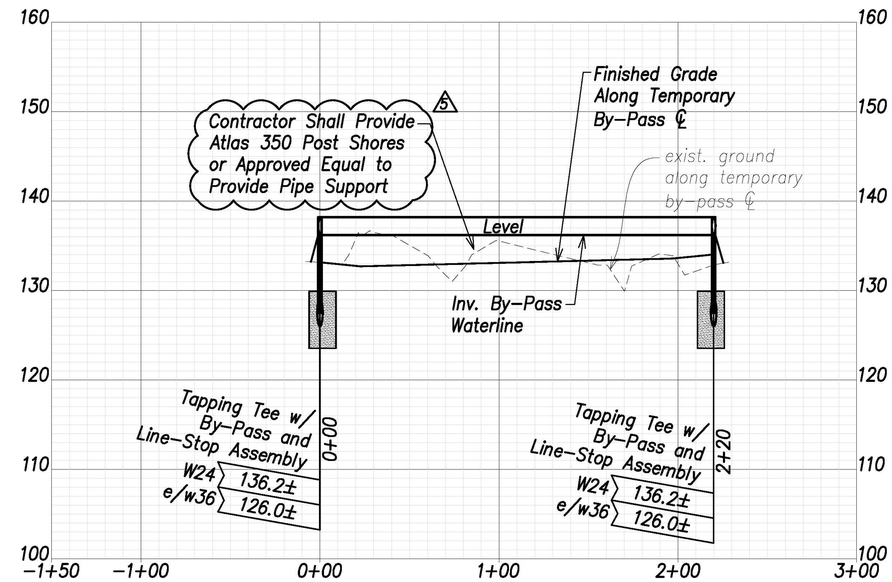

Temporary Waterline By-Pass 2 Profile

Scales: Hor.: 1" = 40'
Vert.: 1" = 8'

APPROVED:

Manager and Chief Engineer, BWS (for work affecting BWS facilities in City/State R/W & BWS easements only) — DATE

Graphic Scales:

1" = 40' 40' 20' 0 40' 80'

1" = 8' 8' 4' 0 8' 16'

Scale in Feet

CRAIG W. L. LUKE LICENSED PROFESSIONAL ENGINEER No. 6935-C HAWAII, U.S.A.

THIS WORK WAS PREPARED BY ME OR UNDER MY SUPERVISION AND CONSTRUCTION OF THIS PROJECT WILL BE UNDER MY OBSERVATION.

SIGNATURE — April 30, 2024 EXPIRATION DATE OF THE LICENSE

DATE	REVISION
07/15/22	5 Revised callouts; Added note

STATE OF HAWAII
DEPARTMENT OF TRANSPORTATION
HIGHWAYS DIVISION

Waterline Connection and Temporary By-Pass – 1

FARRINGTON HIGHWAY WIDENING
Kapolei Golf Course Road to Fort Weaver Road
Project No. 7101A-01-20

Scale: As Shown — Date: April 2022

SHEET No. C-168 OF 767 SHEETS

ORIGINAL PLAN — SURVEY PLOTTED BY, DRAWN BY, TRACED BY, DESIGNED BY, QUANTITIES BY, CHECKED BY, DATE, NOTE BOOK No.

FILE: K:\Civil\23146 Farrington Hwy Widening\Dwg\Construction Dwgs\C-168 Waterline Connection and Temporary By-Pass - 1.dwg saved July 14, 2022

FED. ROAD DIST. NO.	STATE	PROJ. NO.	FISCAL YEAR	SHEET NO.	TOTAL SHEETS
HAWAII	HAW.	7101A-01-20	2021	170	767

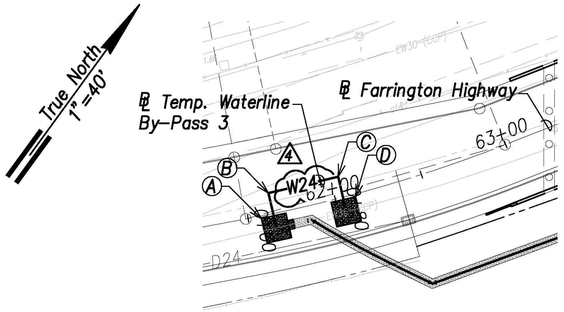

Ⓐ ℄ Sta. 61+64.6, o/s 8.2' Rt. Farrington Highway
=℄ Sta. 0+00 By-Pass
Temporary By-Pass Connection
See Detail Shts. C-208 to C-211 (Typ.) 5

Ⓑ ℄ Sta. 61+6.0, o/s 11.8' Lt. Farrington Highway
=℄ Sta. 0+20 By-Pass
1-24" 1/4 Bend 5

Ⓒ ℄ Sta. 62+04.7, o/s 11.8' Lt. Farrington Highway
=℄ Sta. 0+60 By-Pass
1-24" 1/4 Bend 5

Ⓓ ℄ Sta. 62+04.1, o/s 8.2' Rt. Farrington Highway
=℄ Sta. 0+80 By-Pass
Temporary By-Pass Connection
See Detail Shts. C-208 to C-211 (Typ.) 5

Temporary Waterline By-Pass 3 Plan (℄ Sta. 61+84.3 Farrington Highway)

Scale: 1" = 40'

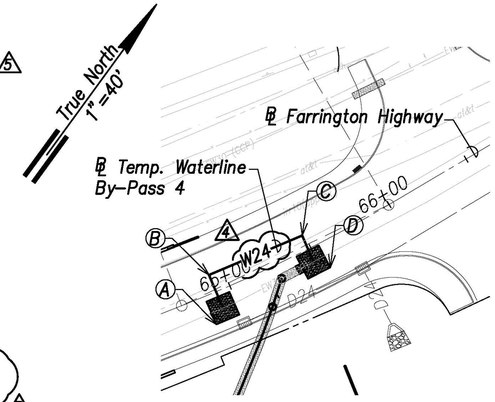

Ⓐ ℄ Sta. 64+91.7, o/s 9.9' Rt. Farrington Highway
=℄ Sta. 0+00 By-Pass
Temporary By-Pass Connection
See Detail Shts. C-208 to C-211 (Typ.)

Ⓑ ℄ Sta. 64+91.6, o/s 10.1' Lt. Farrington Highway
=℄ Sta. 0+20 By-Pass
1-24" 1/4 Bend 5

Ⓒ ℄ Sta. 65+48.9, o/s 8.2' Lt. Farrington Highway
=℄ Sta. 0+76.6 By-Pass
1-24" 1/4 Bend 5

Ⓓ ℄ Sta. 65+47.8, o/s 7.7' Rt. Farrington Highway
=℄ Sta. 0+92.6 By-Pass
Temporary By-Pass Connection
See Detail Shts. C-208 to C-211 (Typ.)

Temporary Waterline By-Pass 4 Plan (℄ Sta. 65+28.2 Farrington Highway)

Scale: 1" = 40'

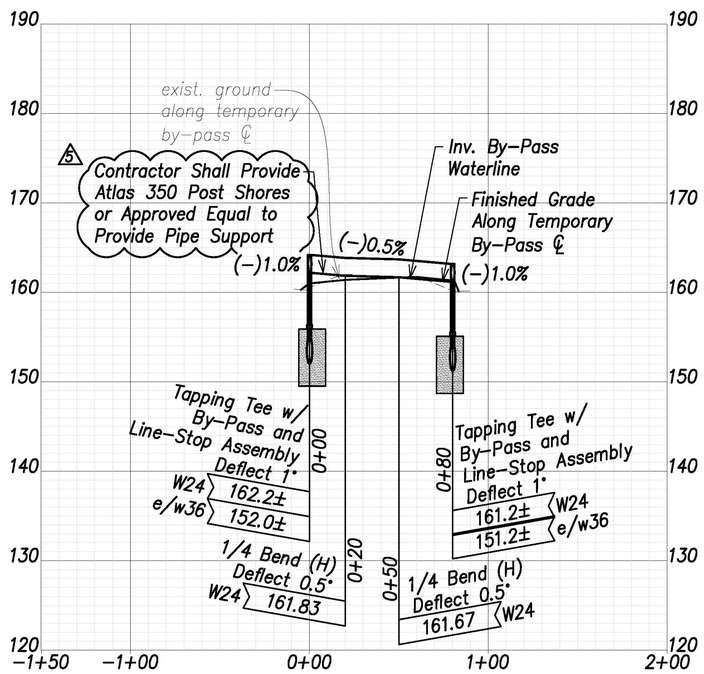

Temporary Waterline By-Pass 3 Profile

Scales: Hor.: 1" = 40'
Vert.: 1" = 8'

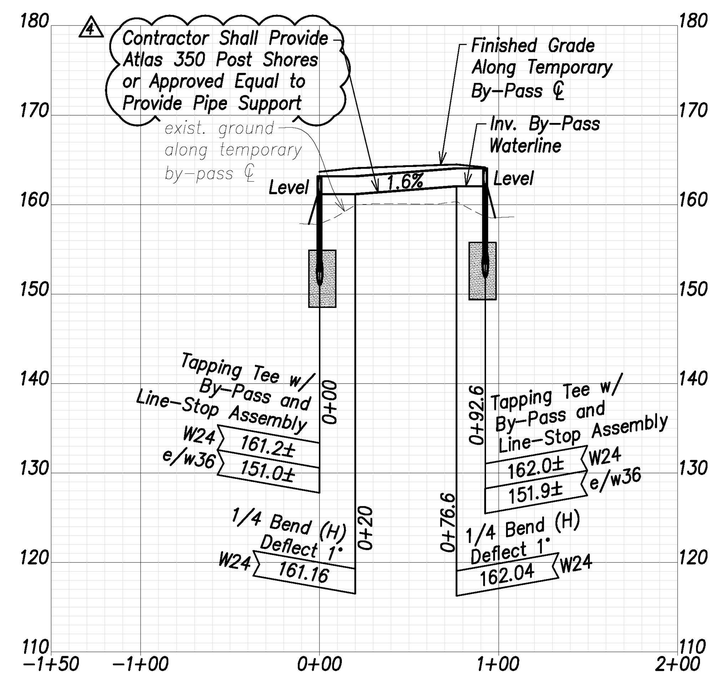

Temporary Waterline By-Pass 4 Profile

Scales: Hor.: 1" = 40'
Vert.: 1" = 8'

5

Notes:

1. Contractor shall provide mechanical joint pipes and fittings with retainer glands and/or flanged pipes and fittings to construct the temporary by-passes
2. The Contractor shall submit the construction schedule and construction phasing for the temporary by-passes to BWS for review and approval. The Contractor shall not commence work on the temporary by-passes until approval is obtained by BWS.

DATE	REVISION
07/15/22	5 Revised callouts; Added note; Added waterline labels
06/08/22	2 Callout Revised

APPROVED:

Manager and Chief Engineer, BWS (for work affecting BWS facilities in City/State R/W & BWS easements only) — DATE

Graphic Scales:

1" = 40' 40' 20' 0 40' 80'

1" = 8' 8' 4' 0 8' 16'

Scale in Feet

CRAIG W. L. LUKE
LICENSED PROFESSIONAL ENGINEER
No. 6935-C
HAWAII, U.S.A.

THIS WORK WAS PREPARED BY ME OR UNDER MY SUPERVISION AND CONSTRUCTION OF THIS PROJECT WILL BE UNDER MY OBSERVATION.

SIGNATURE — April 30, 2024 EXPIRATION DATE OF THE LICENSE

STATE OF HAWAII
DEPARTMENT OF TRANSPORTATION
HIGHWAYS DIVISION

Waterline Connection and Temporary By-Pass – 2

FARRINGTON HIGHWAY WIDENING
Kapolei Golf Course Road to Fort Weaver Road
Project No. 7101A-01-20

Scale: As Shown — Date: April 2022

SHEET No. C-169 OF 767 SHEETS

ORIGINAL PLAN — SURVEY PLOTTED BY / DRAWN BY / TRACED BY / DESIGNED BY / QUANTITIES BY / CHECKED BY / DATE
REVISED PLAN — NOTE BOOK No.

FILE: K:\civil\23146 Farrington Hwy Widening\Dwg\Construction Dwgs\C-169 Waterline Connection and Temporary By-Pass - 2.dwg saved July 1, 2022

FED. ROAD DIST. NO.	STATE	PROJ. NO.	FISCAL YEAR	SHEET NO.	TOTAL SHEETS
HAWAII	HAW.	7101A-01-20	2021	171	767

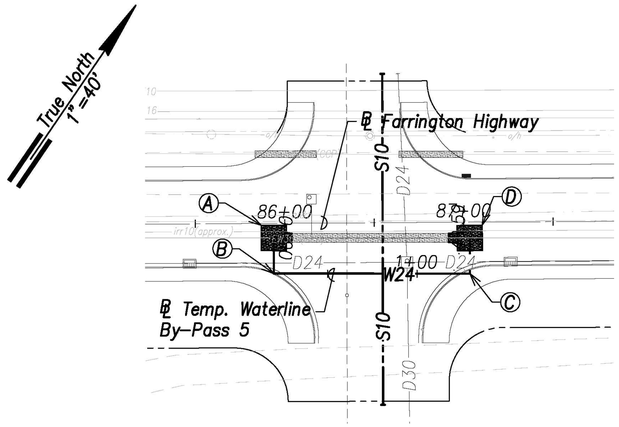

Temporary Waterline By-Pass 5 Plan
(℄ Sta. 86+10 Farrington Highway)
(℄ Sta. 86+85.5 Farrington Highway)

Scale: 1" = 40'

(A) ℄ Sta. 85+93.9, o/s 8.1' Rt. Farrington Highway
=℄ Sta. 0+00 By-Pass
Temporary By-Pass Connection
See Detail Shts. C-208 to C-211 (Typ.) 5

(B) ℄ Sta. 85+93.8, o/s 28.0' Rt. Farrington Highway
=℄ Sta. 0+20 By-Pass
1-24" 1/4 Bend 5

(C) ℄ Sta. 87+03.4, o/s 28.8' Rt. Farrington Highway
=℄ Sta. 1+29.6 By-Pass
1-24" 1/4 Bend 5

(D) ℄ Sta. 87+15, o/s 8.8' Rt. Farrington Highway
=℄ Sta. 1+49.6 By-Pass
Temporary By-Pass Connection
See Detail Shts. C-208 to C-211 (Typ.) 5

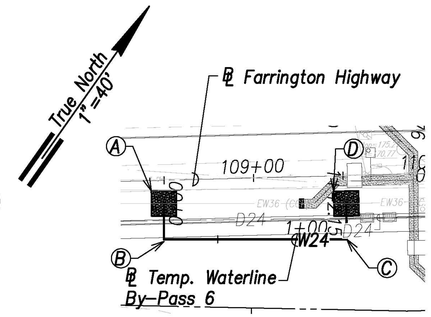

Temporary Waterline By-Pass 6 Plan
(℄ Sta. 109+33.6 Farrington Highway)

Scale: 1" = 40'

(A) ℄ Sta. 108+49.6, o/s 13' Rt. Farrington Highway
=℄ Sta. 0+00 By-Pass
Temporary By-Pass Connection
See Detail Shts. C-208 to C-211 (Typ.)

(B) ℄ Sta. 108+49.1, o/s 34.1' Rt. Farrington Highway
=℄ Sta. 0+20 By-Pass
1-24" 1/4 Bend 5

(C) ℄ Sta. 109+51.2, o/s 35.6' Rt. Farrington Highway
=℄ Sta. 1+22.15 By-Pass
1-24" 1/4 Bend 5

(D) ℄ Sta. 109+51.5, o/s 15.6' Rt. Farrington Highway
=℄ Sta. 1+42.15 By-Pass
Temporary By-Pass Connection
See Detail Shts. C-208 to C-211 (Typ.)

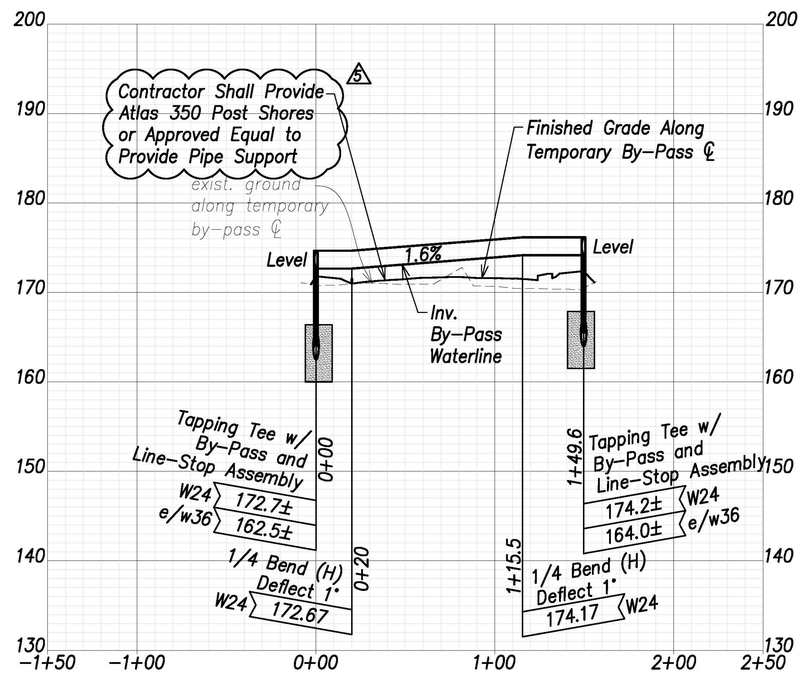

Temporary Waterline By-Pass 5 Profile

Scales: Hor.: 1" = 40'
Vert.: 1" = 8'

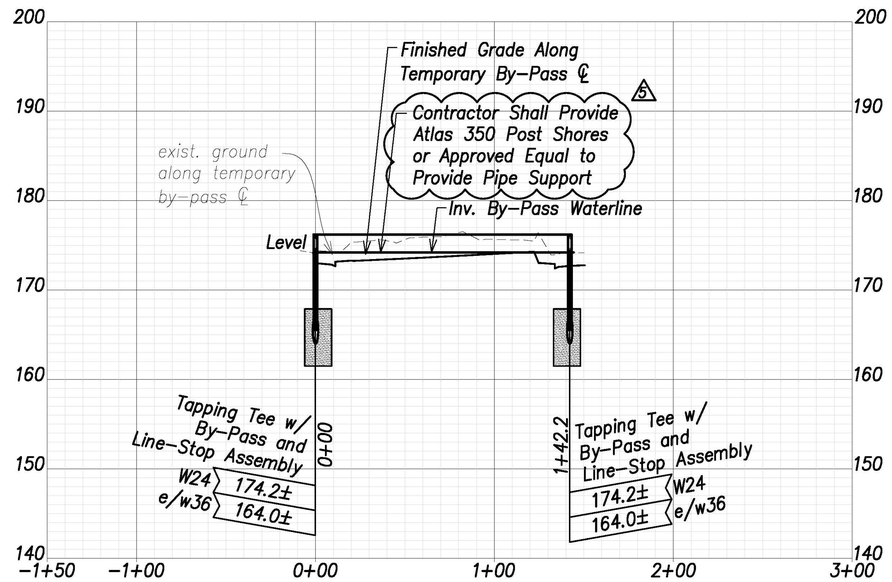

Temporary Waterline By-Pass 6 Profile

Scales: Hor.: 1" = 40'
Vert.: 1" = 8'

Notes:

1. Contractor shall provide mechanical joint pipes and fittings with retainer glands and/or flanged pipes and fittings to construct the temporary by-passes
2. The Contractor shall submit the construction schedule and construction phasing for the temporary by-passes to BWS for review and approval. The Contractor shall not commence work on the temporary by-passes until approval is obtained by BWS.
3. Contractor to probe and layout manhole and bypass block prior to block construction. 5

DATE	REVISION
07/15/22	5 Revised callouts; added note
06/08/22	2 Revised By-Pass Alignment & Profile

APPROVED:

Manager and Chief Engineer, BWS (for work affecting BWS facilities in City/State R/W & BWS easements only) — DATE

Graphic Scales:
1" = 40' 40' 20' 0 40' 80'
1" = 8' 8' 4' 0 8' 16'
Scale in Feet

CRAIG W. L. LUKE LICENSED PROFESSIONAL ENGINEER No. 6935-C HAWAII, U.S.A.

THIS WORK WAS PREPARED BY ME OR UNDER MY SUPERVISION AND CONSTRUCTION OF THIS PROJECT WILL BE UNDER MY OBSERVATION.

SIGNATURE — April 30, 2024 EXPIRATION DATE OF THE LICENSE

STATE OF HAWAII
DEPARTMENT OF TRANSPORTATION
HIGHWAYS DIVISION

Waterline Connection and Temporary By-Pass – 3

FARRINGTON HIGHWAY WIDENING
Kapolei Golf Course Road to Fort Weaver Road
Project No. 7101A-01-20

Scale: As Shown — Date: April 2022

SHEET No. C-170 OF 767 SHEETS

ADD. 171

ORIGINAL PLAN — SURVEY PLOTTED BY, SURVEY BY, TRACED BY, DESIGNED BY, QUANTITIES BY, CHECKED BY, DATE
REVISED PLAN — NOTE BOOK No.

FILE: K:\civil\23146 Farrington Hwy Widening\Dwg\Construction Dwgs\C-170 Waterline Connection and Temporary By-Pass - 3.dwg saved July 14, 2022

FED. ROAD DIST. NO.	STATE	PROJ. NO.	FISCAL YEAR	SHEET NO.	TOTAL SHEETS
HAWAI'I	HAW.	7101A-01-20	2021	172	767

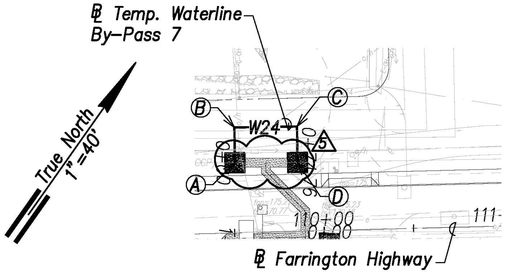

Temporary Waterline By–Pass 7 Plan
(℄ Sta. 109+68.3 Farrington Highway)

Scale: 1" = 40' 5

Ⓐ
℄ Sta. 109+51.1, o/s 39.3' Lt. Farrington Highway
=℄ Sta. 0+00 By–Pass
Temporary By–Pass Connection
See Detail Shts. C–208 to C–211 (Typ.)

Ⓑ
℄ Sta. 109+51.3, o/s 59' Lt. Farrington Highway
=℄ Sta. 0+19.7 By–Pass
1–24" 1/4 Bend, Fl. 5

Ⓒ
℄ Sta. 109+86.3, o/s 58.6' Lt. Farrington Highway
=℄ Sta. 0+35 By–Pass
1–24" 1/4 Bend, Fl. 5

Ⓓ
℄ Sta. 109+86.1, o/s 38.5' Lt. Farrington Highway
=℄ Sta. 0+74.8 By–Pass
Temporary By–Pass Connection
See Detail Shts. C–208 to C–211 (Typ.)

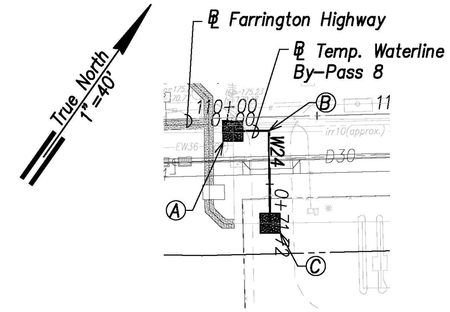

Temporary Waterline By–Pass 8 Plan
(℄ Sta. 110+02.3 Farrington Highway)

Scale: 1" = 40'

Ⓐ
℄ Sta. 110+02.9, o/s 7.4' Rt. Farrington Highway
=℄ Sta. 0+00 By–Pass
Temporary By–Pass Connection
See Detail Shts. C–208 to C–211 (Typ.)

Ⓑ
℄ Sta. 110+22.9, o/s 7.7' Rt. Farrington Highway
=℄ Sta. 0+20 By–Pass
1–24" 1/4 Bend, Fl. 5

Ⓒ
℄ Sta. 110+22.3, o/s 59.4' Rt. Farrington Highway
=℄ Sta. 0+71.7 By–Pass
Temporary By–Pass Connection
See Detail Shts. C–208 to C–211 (Typ.)

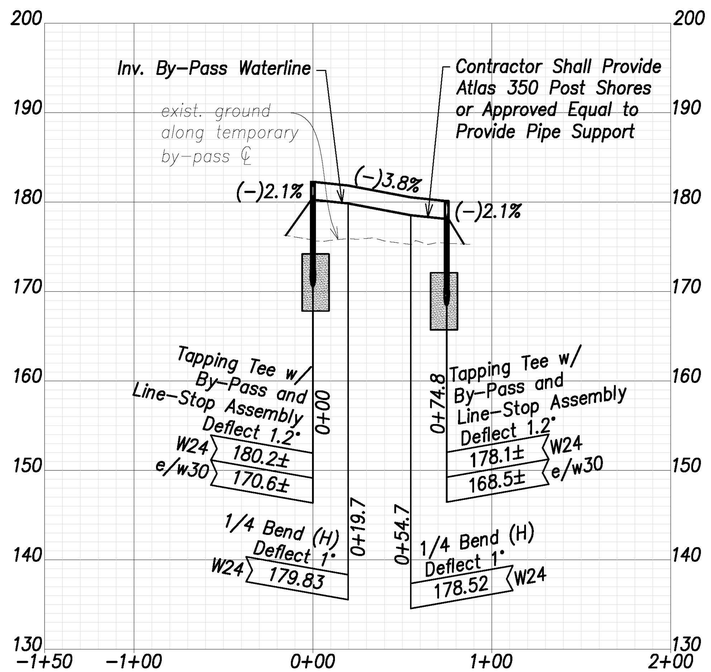

Temporary Waterline By–Pass 7 Profile

Scales: Hor.: 1" = 40'
Vert.: 1" = 8'

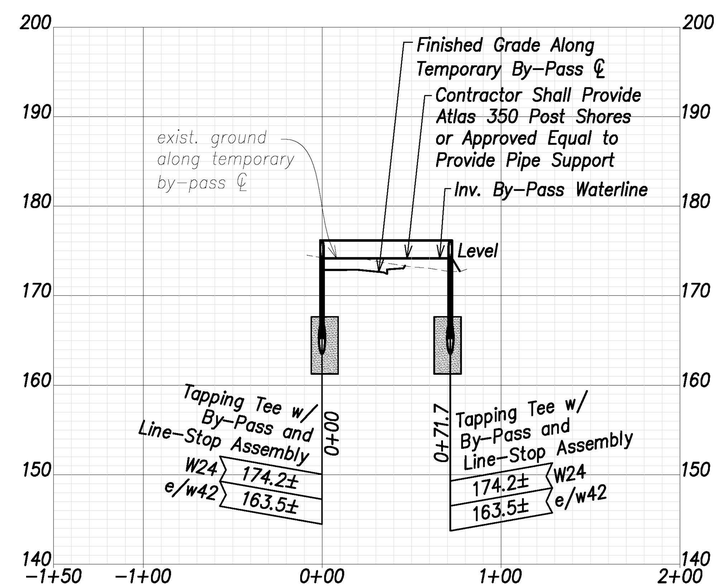

Temporary Waterline By–Pass 8 Profile

Scales: Hor.: 1" = 40'
Vert.: 1" = 8'

Notes:

1. Contractor shall provide mechanical joint pipes and fittings with retainer glands and/or flanged pipes and fittings to construct the temporary by–passes
2. The Contractor shall submit the construction schedule and construction phasing for the temporary by–passes to BWS for review and approval. The Contractor shall not commence work on the temporary by–passes until approval is obtained by BWS.

5

Schedule Note:
The construction working period for Temporary By–Passes 7 and 8 shall be limited to November to February, as approved by BWS.

5

ORIGINAL PLAN	SURVEY PLOTTED BY	DATE
	DRAWN BY	
	TRACED BY	
NOTE BOOK	DESIGNED BY	
	QUANTITIES BY	
No.	CHECKED BY	

APPROVED:

Manager and Chief Engineer, BWS (for work affecting BWS facilities in City/State R/W & BWS easements only) — DATE

Graphic Scales:

1" = 40' 40' 20' 0 40' 80'

1" = 8' 8' 4' 0 8' 16'

Scale in Feet

CRAIG W. L. LUKE
LICENSED PROFESSIONAL ENGINEER
No. 6635-C
HAWAII, U.S.A.

THIS WORK WAS PREPARED BY ME OR UNDER MY SUPERVISION AND CONSTRUCTION OF THIS PROJECT WILL BE UNDER MY OBSERVATION.

SIGNATURE — EXPIRATION DATE OF THE LICENSE: April 30, 2024

DATE	REVISION
07/15/22	5 Revised callouts; added notes
06/08/22	2 Revised By–Pass Alignment & Profile

STATE OF HAWAII
DEPARTMENT OF TRANSPORTATION
HIGHWAYS DIVISION

Waterline Connection and Temporary By–Pass – 4

FARRINGTON HIGHWAY WIDENING
Kapolei Golf Course Road to Fort Weaver Road
Project No. 7101A–01–20

Scale: As Shown — Date: April 2022

SHEET No. C-171 OF 767 SHEETS

ADD. 172

FILE: \\RWTC-FS\projects\csh\23146 Farrington Hwy Widening\Dwg\Construction Dwgs\C-171 Waterline Connection and Temporary By-Pass - 4.dwg saved July 20, 2022

FED. ROAD DIST. NO.	STATE	PROJ. NO.	FISCAL YEAR	SHEET NO.	TOTAL SHEETS
HAWAI'I	HAW.	7101A-01-20	2021	173	767

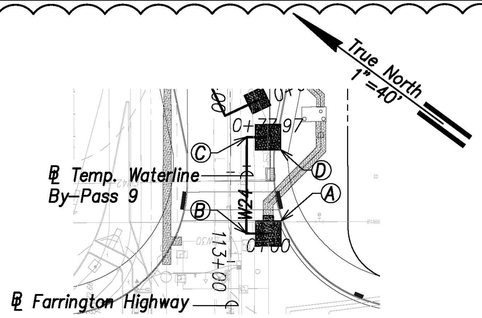

Temporary Waterline By-Pass 9 Plan
(℄ Sta. 113+32.7 Farrington Highway)

Scale: 1" = 40'

Ⓐ
℄ Sta. 113+15.6, o/s 21' Rt. Farrington Highway
=℄ Sta. 0+00 By-Pass
Temporary By-Pass Connection
See Detail Shts. C-208 to C-211 (Typ.)

Ⓑ
℄ Sta. 113+15.8, o/s 8.7' Rt. Farrington Highway
=℄ Sta. 0+12.3 By-Pass
1-24" 1/4 Bend

Ⓒ
℄ Sta. 113+69.6, o/s 9.2' Rt. Farrington Highway
=℄ Sta. 0+66.2 By-Pass
1-24" 1/4 Bend

Ⓓ
℄ Sta. 113+69.5, o/s 20.9' Rt. Farrington Highway
=℄ Sta. 0+78 By-Pass
Temporary By-Pass Connection
See Detail Shts. C-208 to C-211 (Typ.)

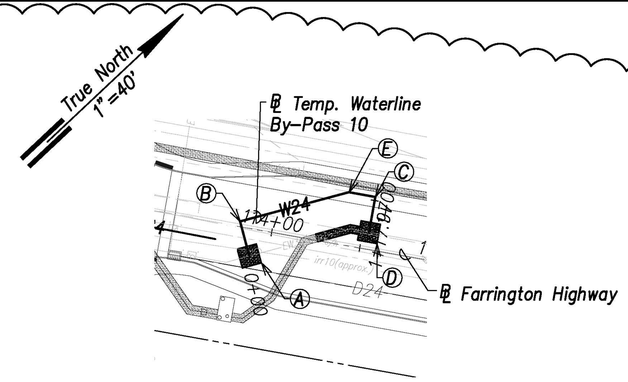

Temporary Waterline By-Pass 10 Plan
(℄ Sta. 114+09 Farrington Highway)

Scale: 1" = 40'

Ⓐ
℄ Sta. 113+90.1, o/s 15.2' Lt. Farrington Highway
=℄ Sta. 0+00 By-Pass
Temporary By-Pass Connection
See Detail Shts. C-208 to C-211 (Typ.)

Ⓑ
℄ Sta. 113+81.6, o/s 3' Lt. Farrington Highway
=℄ Sta. 0+20 By-Pass
1-24" 1/4 Bend

Ⓒ
℄ Sta. 114+53.6, o/s 29.7' Lt. Farrington Highway
=℄ Sta. 0+98 By-Pass
1-24" 1/4 Bend

Ⓓ
℄ Sta. 114+53.6, o/s 9.7' Lt. Farrington Highway
=℄ Sta. 1+18 By-Pass
Temporary By-Pass Connection
See Detail Shts. C-208 to C-211 (Typ.)

Ⓔ
℄ Sta. 114+38.6, o/s 29.7' Lt. Farrington Highway
=℄ Sta. 0+83 By-Pass
1-24" 1/8 Bend

5

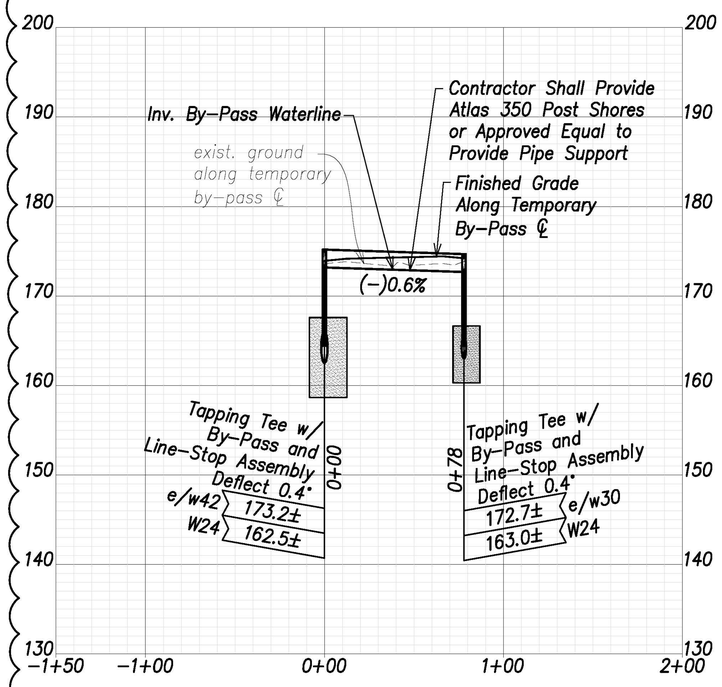

Temporary Waterline By-Pass 9 Profile

Scales: Hor.: 1" = 40'
Vert.: 1" = 8'

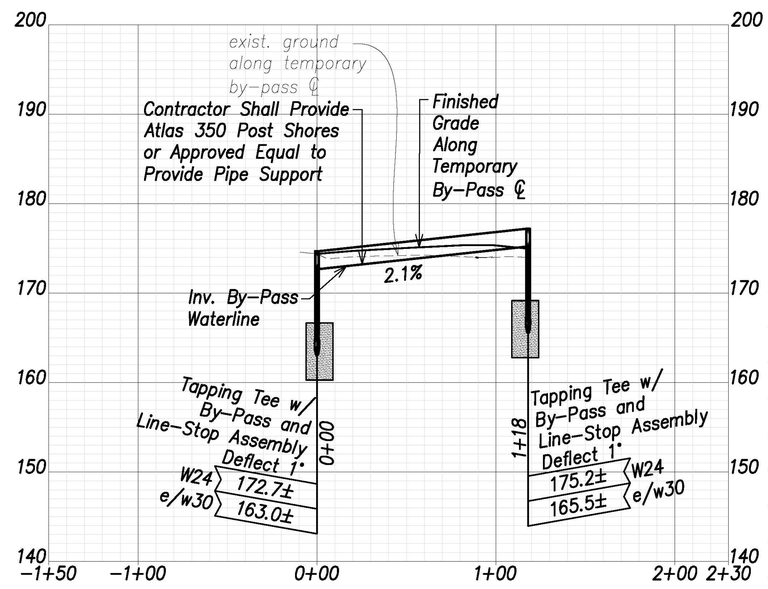

Temporary Waterline By-Pass 10 Profile

Scales: Hor.: 1" = 40'
Vert.: 1" = 8'

Notes:

1. Contractor shall provide mechanical joint pipes and fittings with retainer glands and/or flanged pipes and fittings to construct the temporary by-passes
2. The Contractor shall submit the construction schedule and construction phasing for the temporary by-passes to BWS for review and approval. The Contractor shall not commence work on the temporary by-passes until approval is obtained by BWS.

5

ORIGINAL PLAN	SURVEY PLOTTED BY	DATE
	DRAWN BY	
	TRACED BY	
NOTE BOOK	DESIGNED BY	
	QUANTITIES BY	
No.	CHECKED BY	

APPROVED:

Manager and Chief Engineer, BWS (for work affecting BWS facilities in City/State R/W & BWS easements only) — DATE

Graphic Scales:

1" = 40' — 40' 20' 0 40' 80'

1" = 8' — 8' 4' 0 8' 16'

Scale in Feet

CRAIG W. L. LUKE
LICENSED PROFESSIONAL ENGINEER
No. 6935-C
HAWAII, U.S.A.

THIS WORK WAS PREPARED BY ME OR UNDER MY SUPERVISION AND CONSTRUCTION OF THIS PROJECT WILL BE UNDER MY OBSERVATION.

SIGNATURE — April 30, 2024 EXPIRATION DATE OF THE LICENSE

DATE	REVISION
07/15/22	5 Revised By-Passes; Added note

STATE OF HAWAII
DEPARTMENT OF TRANSPORTATION
HIGHWAYS DIVISION

Waterline Connection and Temporary By-Pass – 5

FARRINGTON HIGHWAY WIDENING
Kapolei Golf Course Road to Fort Weaver Road
Project No. 7101A-01-20

Scale: As Shown — Date: April 2022

SHEET No. C-172 OF 767 SHEETS

ADD. 173

FILE: \\WMTC-FS\project\civil\23146 Farrington Hwy Widening\Dwg\Construction Dwgs\C-172 Waterline Connection and Temporary By-Pass - 5.dwg saved July 19, 2022

FED. ROAD DIST. NO.	STATE	PROJ. NO.	FISCAL YEAR	SHEET NO.	TOTAL SHEETS
HAWAII	HAW.	7101A-01-20	2021	174	767

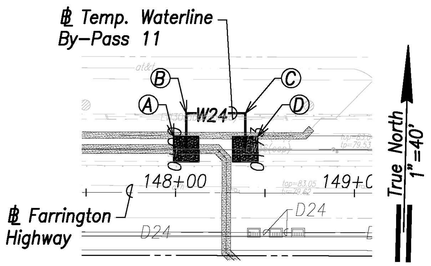

Temporary Waterline By-Pass 11 Plan (℄ Sta. 148+22.9 Farrington Highway)

Scale: 1" = 40'

Ⓐ
℄ Sta. 148+05.9, o/s 24.4' Lt. Farrington Highway
=℄ Sta. 0+00 By-Pass
Temporary By-Pass Connection
See Detail Shts. C-208 to C-211 (Typ.)

Ⓑ
℄ Sta. 148+05.9, o/s 44.4' Lt. Farrington Highway
=℄ Sta. 0+20 By-Pass
1-24" 1/4 Bend
5

Ⓒ
℄ Sta. 148+38.9, o/s 44.5' Lt. Farrington Highway
=℄ Sta. 0+53 By-Pass
1-24" 1/4 Bend
5

Ⓓ
℄ Sta. 148+38.9, o/s 24.5' Lt. Farrington Highway
=℄ Sta. 0+73 By-Pass
Temporary By-Pass Connection
See Detail Shts. C-208 to C-211 (Typ.)

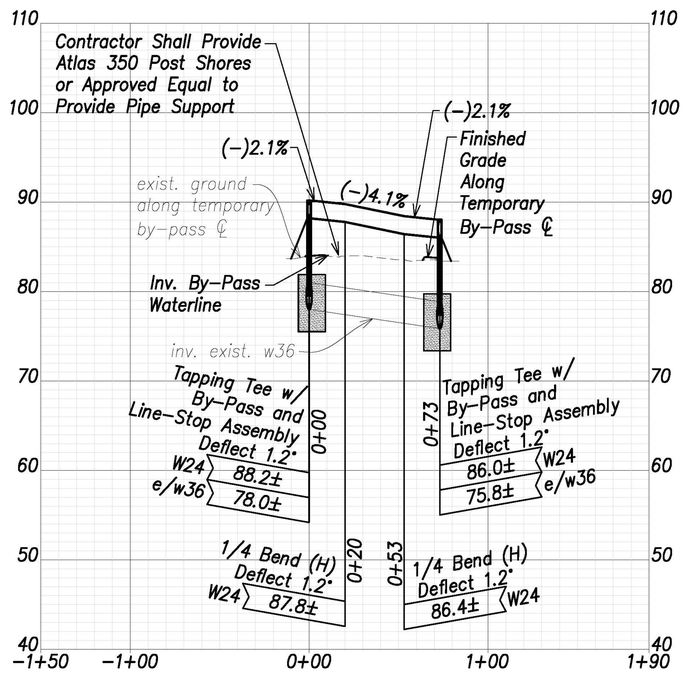

Temporary Waterline By-Pass 11 Profile

Scales: Hor.: 1" = 40'
Vert.: 1" = 8'

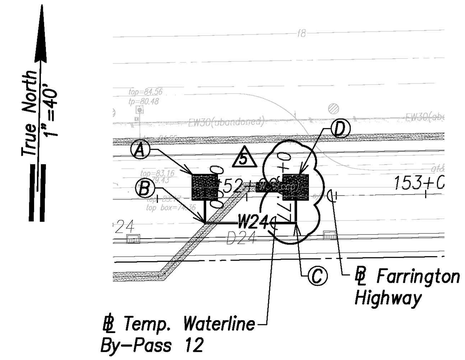

Temporary Waterline By-Pass 12 Plan (℄ Sta. 152+05.6 Farrington Highway)

Scale: 1" = 40'

Ⓐ
℄ Sta. 151+76.7, o/s 6.1' Lt. Farrington Highway
=℄ Sta. 0+00 By-Pass
Temporary By-Pass Connection
See Detail Shts. C-208 to C-211 (Typ.)

Ⓑ
℄ Sta. 157+76.3, o/s 14' Rt. Farrington Highway
=℄ Sta. 0+20 By-Pass
1-24" 1/4 Bend

Ⓒ
℄ Sta. 152+27.1, o/s 14.8' Rt. Farrington Highway
=℄ Sta. 0+65.8 By-Pass
1-24" 1/4 Bend

Ⓓ
℄ Sta. 152+27.5, o/s 5.2' Lt. Farrington Highway
=℄ Sta. 0+90.8 By-Pass
Temporary By-Pass Connection
See Detail Shts. C-208 to C-211 (Typ.)
5

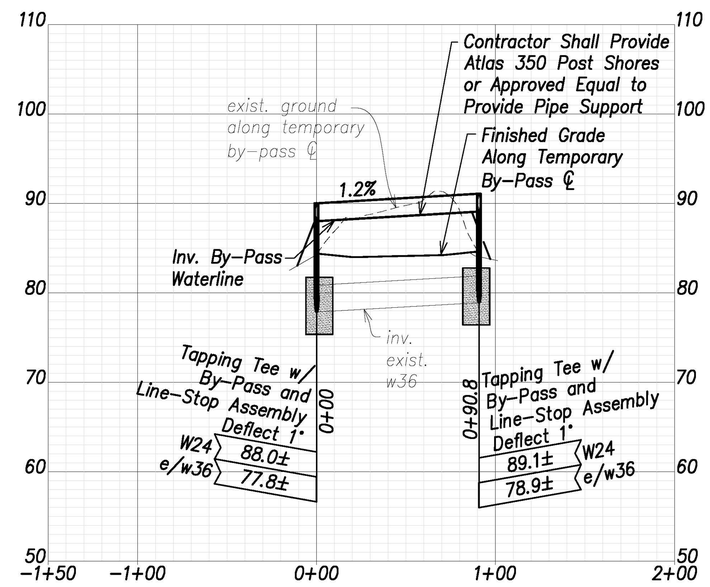

Temporary Waterline By-Pass 12 Profile

Scales: Hor.: 1" = 40'
Vert.: 1" = 8'

Notes:

1. Contractor shall provide mechanical joint pipes and fittings with retainer glands and/or flanged pipes and fittings to construct the temporary by-passes
2. The Contractor shall submit the construction schedule and construction phasing for the temporary by-passes to BWS for review and approval. The Contractor shall not commence work on the temporary by-passes until approval is obtained by BWS.

5

DATE	REVISION
07/15/22	5 Revised callouts; added note; Revised Temp. Bypass 12 layout
06/08/22	2 Revised By-Pass Alignment & Profile

APPROVED:

Manager and Chief Engineer, BWS (for work affecting BWS facilities in City/State R/W & BWS easements only) — DATE

Graphic Scales:

1" = 40' 40' 20' 0 40' 80'

1" = 8' 8' 4' 0 8' 16'

Scale in Feet

CRAIG W. L. LUKE LICENSED PROFESSIONAL ENGINEER No. 6935-C HAWAII, U.S.A.

THIS WORK WAS PREPARED BY ME OR UNDER MY SUPERVISION AND CONSTRUCTION OF THIS PROJECT WILL BE UNDER MY OBSERVATION.

SIGNATURE — EXPIRATION DATE OF THE LICENSE: April 30, 2024

STATE OF HAWAII
DEPARTMENT OF TRANSPORTATION
HIGHWAYS DIVISION

Waterline Connection and Temporary By-Pass – 6

FARRINGTON HIGHWAY WIDENING
Kapolei Golf Course Road to Fort Weaver Road
Project No. 7101A-01-20

Scale: As Shown — Date: April 2022

SHEET No. C-173 OF 767 SHEETS

ORIGINAL PLAN — SURVEY PLOTTED BY / SURVEY BY / TRACED BY / DESIGNED BY / QUANTITIES BY / CHECKED BY / NOTE BOOK No. / DATE

FILE: K:\civil\23146 Farrington Hwy Widening\Dwg\Construction Dwgs\C-173 Waterline Connection and Temporary By-Pass - 6.dwg saved July 19, 2022

FED. ROAD DIST. NO.	STATE	PROJ. NO.	FISCAL YEAR	SHEET NO.	TOTAL SHEETS
HAWAII	HAW.	7101A-01-20	2021	175	767

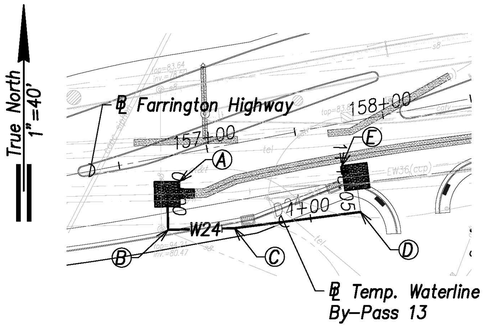

Temporary Waterline By-Pass 13 Plan
(℄ Sta. 156+94.2 Farrington Highway)

Scale: 1" = 40'

Ⓐ
℄ Sta. 156+73.5, o/s 20.7' Rt. Farrington Highway
=℄ Sta. 0+00 By-Pass
Temporary By-Pass Connection
See Detail Shts. C-208 to C-211 (Typ.)

Ⓑ
℄ Sta. 156+70.2, o/s 40.4' Rt. Farrington Highway
=℄ Sta. 0+20 By-Pass
1-24" 1/4 Bend
5

Ⓒ
℄ Sta. 157+06.7, o/s 46.5' Rt. Farrington Highway
=℄ Sta. 0+57 By-Pass
1-24" 1/16 Bend
5

Ⓓ
℄ Sta. 157+77.6, o/s 50.8' Rt. Farrington Highway
=℄ Sta. 1+28.1 By-Pass
1-24" 1/4 Bend
5

Ⓔ
℄ Sta. 157+78.8, o/s 30.8' Rt. Farrington Highway
=℄ Sta. 1+48.1 By-Pass
Temporary By-Pass Connection
See Detail Shts. C-208 to C-211 (Typ.)

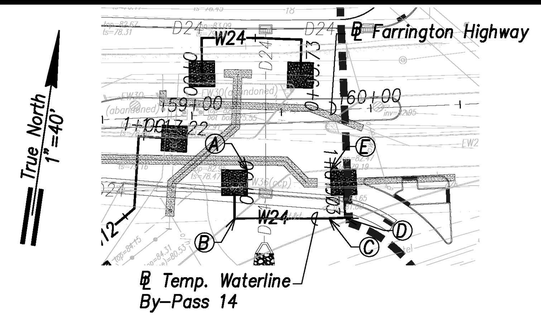

Temporary Waterline By-Pass 14 Plan
(℄ Sta. 159+62.3 Farrington Highway)

Scale: 1" = 40'

Ⓐ
℄ Sta. 159+22.3, o/s 38.3' Rt. Farrington Highway
=℄ Sta. 0+00 By-Pass
Temporary By-Pass Connection
See Detail Shts. C-208 to C-211 (Typ.)

Ⓑ
℄ Sta. 159+21.5, o/s 58.3' Rt. Farrington Highway
=℄ Sta. 0+20 By-Pass
1-24" 1/4 Bend
5

Ⓒ
℄ Sta. 159+73.9, o/s 60.5' Rt. Farrington Highway
=℄ Sta. 0+72.5 By-Pass
1-24" Deflection
5

Ⓓ
℄ Sta. 159+83.2, o/s 60.5' Rt. Farrington Highway
=℄ Sta. 0+81.7 By-Pass
1-24" 1/4 Bend
5

Ⓔ
℄ Sta. 159+83.2, o/s 40.5' Rt. Farrington Highway
=℄ Sta. 1+01.7 By-Pass
Temporary By-Pass Connection
See Detail Shts. C-208 to C-211 (Typ.)

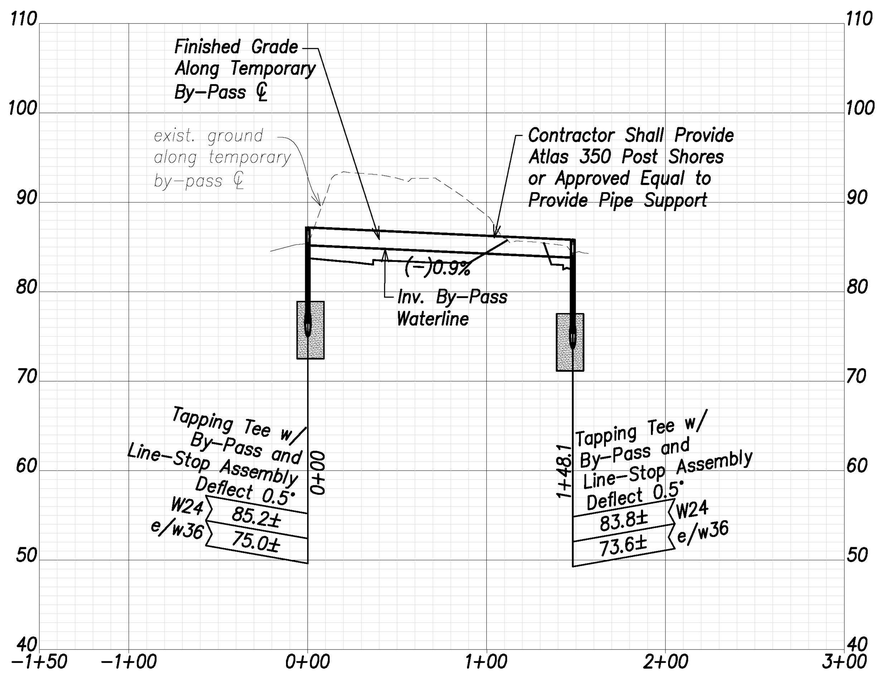

Temporary Waterline By-Pass 13 Profile

Scales: Hor.: 1" = 40'
Vert.: 1" = 8'

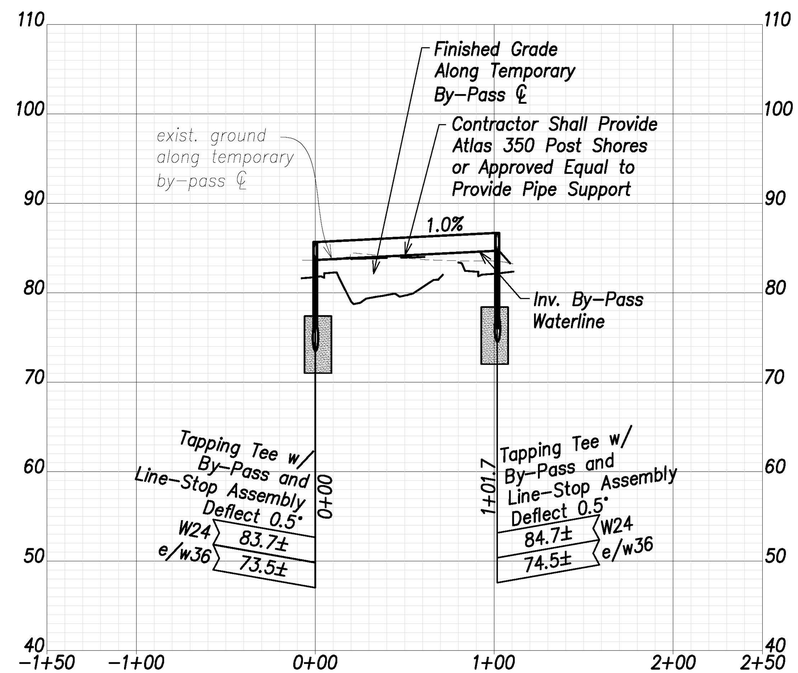

Temporary Waterline By-Pass 14 Profile

Scales: Hor.: 1" = 40'
Vert.: 1" = 8'

Notes:

1. Contractor shall provide mechanical joint pipes and fittings with retainer glands and/or flanged pipes and fittings to construct the temporary by-passes
2. The Contractor shall submit the construction schedule and construction phasing for the temporary by-passes to BWS for review and approval. The Contractor shall not commence work on the temporary by-passes until approval is obtained by BWS.

5

APPROVED:

Manager and Chief Engineer, BWS (for work affecting BWS facilities in City/State R/W & BWS easements only) — DATE

Graphic Scales:

1" = 40' 40' 20' 0 40' 80'

1" = 8' 8' 4' 0 8' 16'

Scale in Feet

CRAIG W. L. LUKE
LICENSED PROFESSIONAL ENGINEER
No. 6935-C
HAWAII, U.S.A.

THIS WORK WAS PREPARED BY ME OR UNDER MY SUPERVISION AND CONSTRUCTION OF THIS PROJECT WILL BE UNDER MY OBSERVATION.

SIGNATURE — April 30, 2024 EXPIRATION DATE OF THE LICENSE

DATE	REVISION
07/15/22	5 Revised callouts; added note
06/08/22	2 Revised By-Pass Alignment & Profile

STATE OF HAWAII
DEPARTMENT OF TRANSPORTATION
HIGHWAYS DIVISION

Waterline Connection and Temporary By-Pass – 7

FARRINGTON HIGHWAY WIDENING
Kapolei Golf Course Road to Fort Weaver Road
Project No. 7101A-01-20

Scale: As Shown — Date: April 2022

SHEET No. C-174 OF 767 SHEETS

ORIGINAL PLAN — SURVEY PLOTTED BY / DRAWN BY / TRACED BY / DESIGNED BY / QUANTITIES BY / CHECKED BY / DATE / NOTE BOOK / No.

FILE: K:\civil\23146 Farrington Hwy Widening\Dwg\Construction Dwgs\C-174 Waterline Connection and Temporary By-Pass - 7.dwg saved July 14, 2022

FED. ROAD DIST. NO.	STATE	PROJ. NO.	FISCAL YEAR	SHEET NO.	TOTAL SHEETS
HAWAII	HAW.	7101A-01-20	2021	176	767

True North
1"=40'

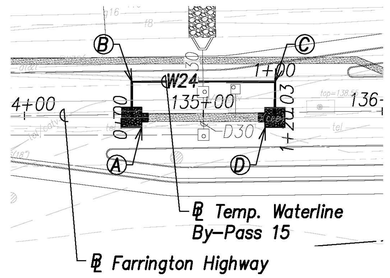

Temporary Waterline By-Pass 15 Plan (℄ Sta. 134+75 Farrington Highway) (℄ Sta. 135+24.9 Farrington Highway)

Scale: 1" = 40'

Ⓐ
℄ Sta. 134+60, o/s 1.7' Rt. Farrington Highway
=℄ Sta. 0+00 By-Pass
Temporary By-Pass Connection
See Detail Shts. C-208 to C-211 (Typ.)

Ⓑ
℄ Sta. 134+60.3, o/s 18.3' Lt. Farrington Highway
=℄ Sta. 0+20 By-Pass
1-24" 1/4 Bend
5

Ⓒ
℄ Sta. 135+40.3, o/s 17.2' Lt. Farrington Highway
=℄ Sta. 1+00 By-Pass
1-24" 1/4 Bend
5

Ⓓ
℄ Sta. 135+40, o/s 2.8' Rt. Farrington Highway
=℄ Sta. 1+20 By-Pass
Temporary By-Pass Connection
See Detail Shts. C-208 to C-211 (Typ.)

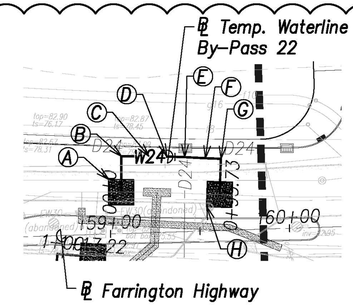

Temporary Waterline By-Pass 22 Plan (℄ Sta. 150+07.3 Farrington Highway) (℄ Sta. 159+61.6 Farrington Highway)

Scale: 1" = 40'

Ⓐ
℄ Sta. 159+06.7, o/s 2.3' Lt. Farrington Highway
=℄ Sta. 0+00 By-Pass
Temporary By-Pass Connection
See Detail Shts. C-208 to C-211 (Typ.)

Ⓑ
℄ Sta. 159+07.3, o/s 43.3' Lt. Farrington Highway
=℄ Sta. 0+20 By-Pass
1-12" 1/4 Bend

Ⓒ
℄ Sta. 159+22.7, o/s 42.7' Lt. Farrington Highway
=℄ Sta. 0+35.3 By-Pass
1-12" Deflection

Ⓓ
℄ Sta. 159+32.6, o/s 42.3' Lt. Farrington Highway
=℄ Sta. 0+45.3 By-Pass
1-12" Deflection

Ⓔ
℄ Sta. 159+42.6, o/s 41.6' Lt. Farrington Highway
=℄ Sta. 0+55.3 By-Pass
1-12" Deflection

Ⓕ
℄ Sta. 159+54.2, o/s 40.6' Lt. Farrington Highway
=℄ Sta. 0+67.0 By-Pass
1-12" Deflection

Ⓖ
℄ Sta. 159+62.9, o/s 40.0' Lt. Farrington Highway
=℄ Sta. 0+75.7 By-Pass
1-12" 1/4 Bend

Ⓗ
℄ Sta. 159+73.6, o/s 19.3' Lt. Farrington Highway
=℄ Sta. 0+95.7 By-Pass
Temporary By-Pass Connection
See Detail Shts. C-208 to C-211 (Typ.)

5

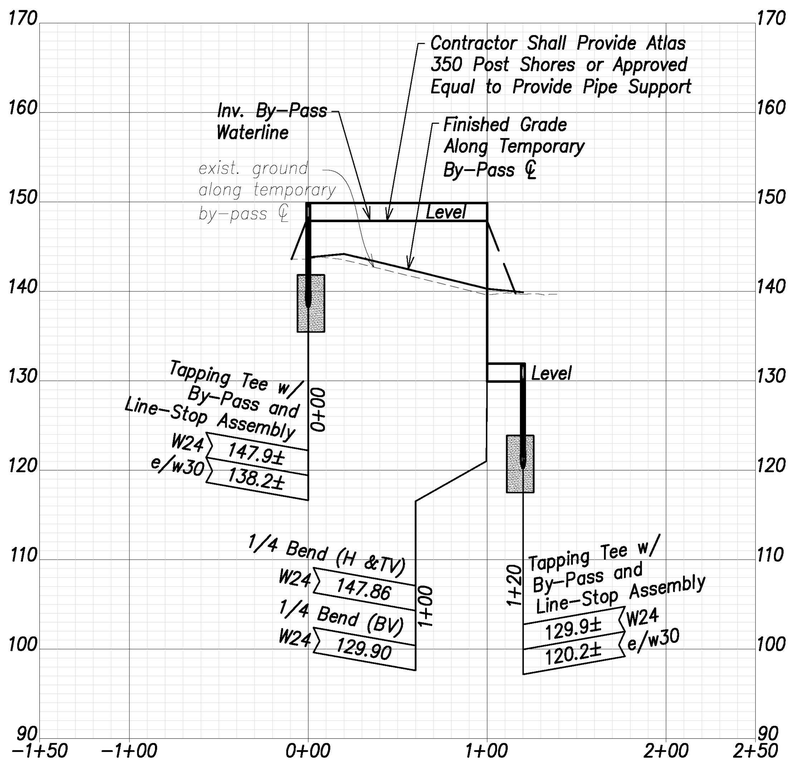

Temporary Waterline By-Pass 15 Profile

Scales: Hor.: 1" = 40'
Vert.: 1" = 8'

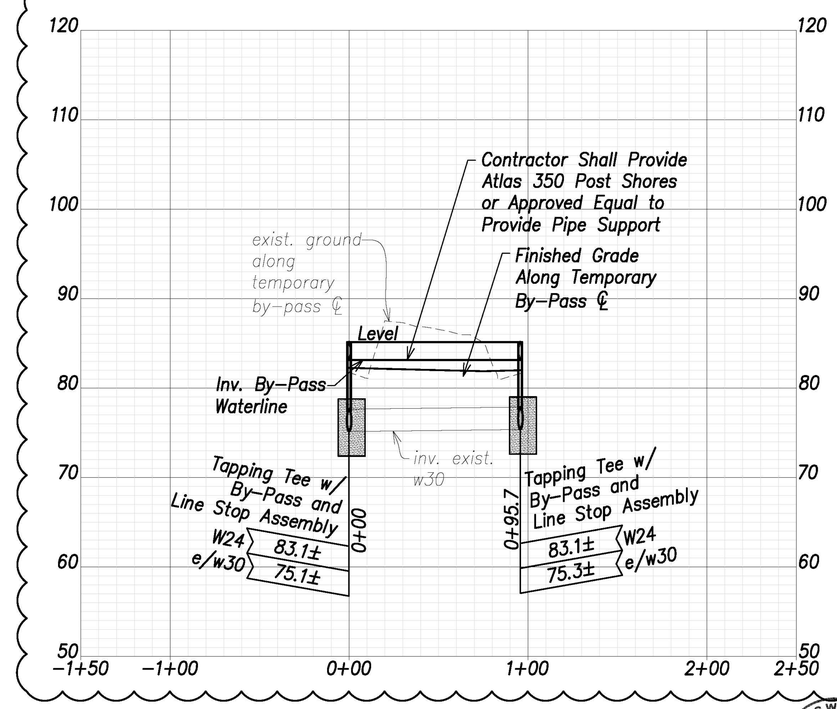

Notes:

1. Contractor shall provide mechanical joint pipes and fittings with retainer glands and/or flanged pipes and fittings to construct the temporary by-passes
2. The Contractor shall submit the construction schedule and construction phasing for the temporary by-passes to BWS for review and approval. The Contractor shall not commence work on the temporary by-passes until approval is obtained by BWS.

5

Graphic Scales:

1" = 40' 40' 20' 0 40' 80'

1" = 8' 8' 4' 0 8' 16'

Scale in Feet

APPROVED:

Manager and Chief Engineer, BWS (for work affecting BWS facilities in City/State R/W & BWS easements only) — DATE

DATE	REVISION
07/15/22	5 Revised callouts; added note
06/08/22	2 Revised By-Pass Alignment & Profile

STATE OF HAWAII
DEPARTMENT OF TRANSPORTATION
HIGHWAYS DIVISION

Waterline Connection and Temporary By-Pass - 8

FARRINGTON HIGHWAY WIDENING
Kapolei Golf Course Road to Fort Weaver Road
Project No. 7101A-01-20

Scale: As Shown — Date: April 2022

CRAIG W. L. LUKE — LICENSED PROFESSIONAL ENGINEER — No. 6935-C — HAWAII, U.S.A.

THIS WORK WAS PREPARED BY ME OR UNDER MY SUPERVISION AND CONSTRUCTION OF THIS PROJECT WILL BE UNDER MY OBSERVATION.

SIGNATURE — April 30, 2024 EXPIRATION DATE OF THE LICENSE

ORIGINAL PLAN — SURVEY PLOTTED BY / DRAWN BY / TRACED BY / DESIGNED BY / QUANTITIES BY / CHECKED BY / NOTE BOOK No. / DATE

SHEET No. C-175 OF 767 SHEETS

ADD. 176

FILE: K:\Civil\23146 Farrington Hwy Widening\Dwg\Construction Dwgs\C-175 Waterline Connection and Temporary By-Pass - 8.dwg saved July 18, 2022

FED. ROAD DIST. NO.	STATE	PROJ. NO.	FISCAL YEAR	SHEET NO.	TOTAL SHEETS
HAWAII	HAW.	7101A-01-20	2021	177	767

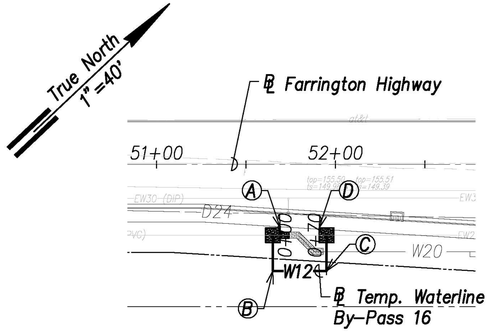

Temporary Waterline By-Pass 16 Plan
(℄ Sta. 51+79 Farrington Highway)

Scale: 1" = 40'

Ⓐ
℄ Sta. 51+65, o/s 39.4' Rt. Farrington Highway
=℄ Sta. 0+00 By-Pass
Temporary By-Pass Connection
See Detail Shts. C-208 to C-211 (Typ.)

Ⓑ
℄ Sta. 51+65, o/s 59.4' Rt. Farrington Highway
=℄ Sta. 0+20 By-Pass
1-12" 1/4 Bend 5

Ⓒ
℄ Sta. 51+95, o/s 59.4' Rt. Farrington Highway
=℄ Sta. 0+50 By-Pass
1-12" 1/4 Bend 5

Ⓓ
℄ Sta. 51+95, o/s 39.4' Rt. Farrington Highway
=℄ Sta. 0+70 By-Pass
Temporary By-Pass Connection
See Detail Shts. C-208 to C-211 (Typ.)

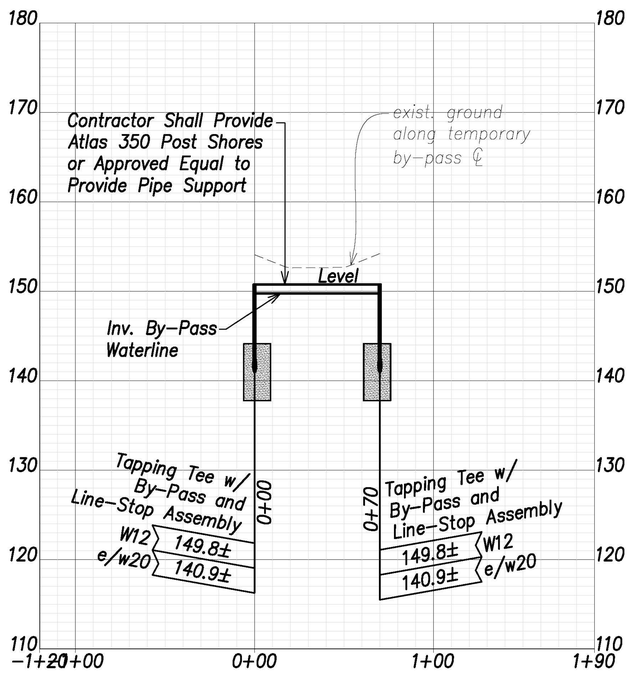

Temporary Waterline By-Pass 16 Profile

Scales: Hor.: 1" = 40'
Vert.: 1" = 8'

Schedule Note:
The construction working period for Temporary By-Passes 16 and 17 shall be limited to November to February, as approved by BWS. 5

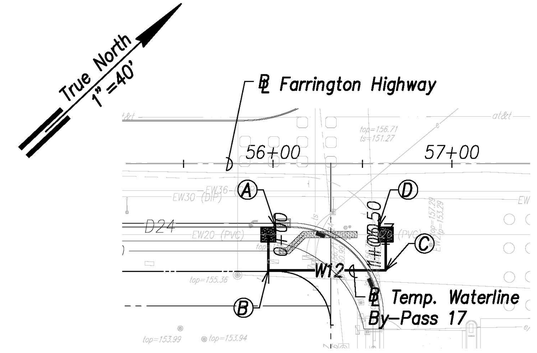

Temporary Waterline By-Pass 17 Plan
(℄ Sta. 56+37 Farrington Highway)

Scale: 1" = 40'

Ⓐ
℄ Sta. 55+97.5, o/s 39.4' Rt. Farrington Highway
=℄ Sta. 0+00 By-Pass
Temporary By-Pass Connection
See Detail Shts. C-208 to C-211 (Typ.)

Ⓑ
℄ Sta. 55+97.5, o/s 59.4' Rt. Farrington Highway
=℄ Sta. 0+20 By-Pass
1-12" 1/4 Bend 5

Ⓒ
℄ Sta. 56+63, o/s 59.4' Rt. Farrington Highway
=℄ Sta. 0+85.5 By-Pass
1-12" 1/4 Bend 5

Ⓓ
℄ Sta. 56+63, o/s 39.4' Rt. Farrington Highway
=℄ Sta. 1+05.5 By-Pass
Temporary By-Pass Connection
See Detail Shts. C-208 to C-211 (Typ.)

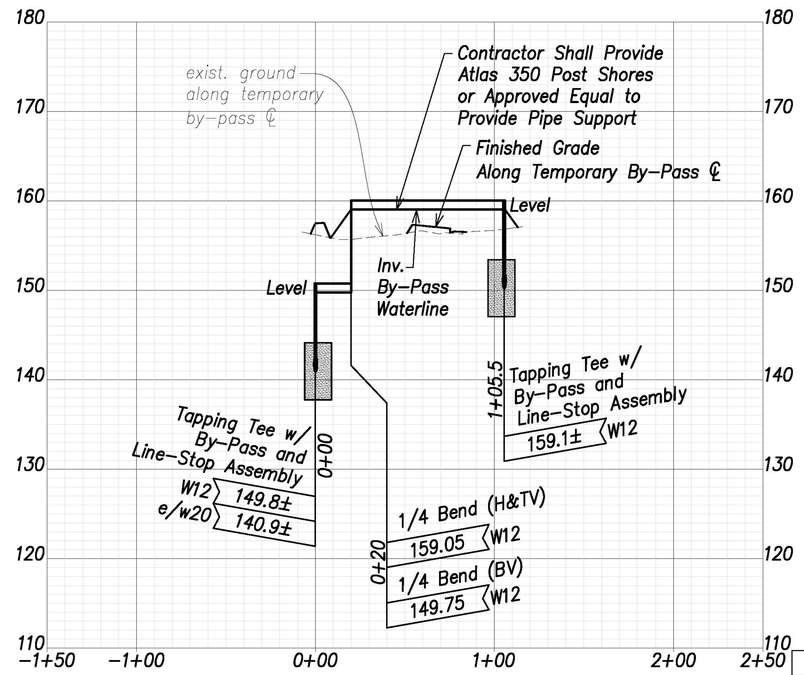

Temporary Waterline By-Pass 17 Profile

Scales: Hor.: 1" = 40'
Vert.: 1" = 8'

Notes:
1. Contractor shall provide mechanical joint pipes and fittings with retainer glands and/or flanged pipes and fittings to construct the temporary by-passes
2. The Contractor shall submit the construction schedule and construction phasing for the temporary by-passes to BWS for review and approval. The Contractor shall not commence work on the temporary by-passes until approval is obtained by BWS. 5

DATE	REVISION
07/15/22	5 Revised callouts; added notes

APPROVED:

Manager and Chief Engineer, BWS (for work affecting BWS facilities in City/State R/W & BWS easements only) — DATE

Graphic Scales:
1" = 40' 40' 20' 0 40' 80'
1" = 8' 8' 4' 0 8' 16'
Scale in Feet

CRAIG W. L. LUKE
LICENSED PROFESSIONAL ENGINEER
No. 6935-C
HAWAII, U.S.A.

THIS WORK WAS PREPARED BY ME OR UNDER MY SUPERVISION AND CONSTRUCTION OF THIS PROJECT WILL BE UNDER MY OBSERVATION.

SIGNATURE — April 30, 2024 EXPIRATION DATE OF THE LICENSE

STATE OF HAWAII
DEPARTMENT OF TRANSPORTATION
HIGHWAYS DIVISION

Waterline Connection and Temporary By-Pass – 9

FARRINGTON HIGHWAY WIDENING
Kapolei Golf Course Road to Fort Weaver Road
Project No. 7101A-01-20

Scale: As Shown — Date: April 2022

SHEET No. C-176 OF 767 SHEETS

ADD. 177

ORIGINAL PLAN — SURVEY PLOTTED BY / SURVEY BY / TRACED BY / DESIGNED BY / QUANTITIES BY / CHECKED BY / DATE
NOTE BOOK No.

FILE: K:\civil\23146 Farrington Hwy Widening\Dwg\Construction Dwgs\C-176 Waterline Connection and Temporary By-Pass - 9.dwg saved July 20, 2022

FED. ROAD DIST. NO.	STATE	PROJ. NO.	FISCAL YEAR	SHEET NO.	TOTAL SHEETS
HAWAII	HAW.	7101A-01-20	2021	178	767

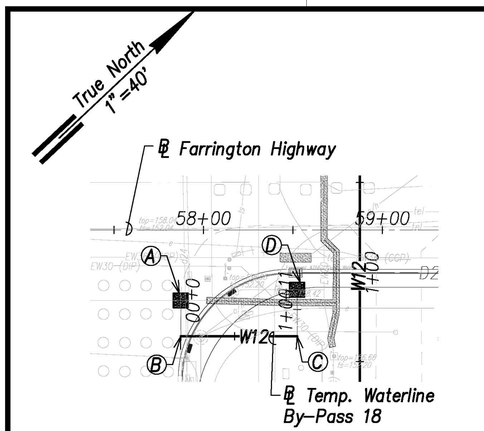

Temporary Waterline By-Pass 18 Plan
(℄ Sta. 58+67.5 Farrington Highway)
(℄ Sta. 58+70.7 Farrington Highway)

Scale: 1" = 40'

Ⓐ
℄ Sta. 57+87.4, o/s 39.4' Rt. Farrington Highway
=℄ Sta. 0+00 By-Pass
Temporary By-Pass Connection
See Detail Shts. C-208 to C-211 (Typ.)

Ⓑ
℄ Sta. 58+20.2, o/s 55.7' Rt. Farrington Highway
=℄ Sta. 0+20 By-Pass
1-12" 1/4 Bend
5

Ⓒ
℄ Sta. 58+52.4, o/s 59.4' Rt. Farrington Highway
=℄ Sta. 0+65 By-Pass
1-12" 1/4 Bend
5

Ⓓ
℄ Sta. 58+52.4, o/s 33.4' Rt. Farrington Highway
=℄ Sta. 1+11 By-Pass
Temporary By-Pass Connection
See Detail Shts. C-208 to C-211 (Typ.)

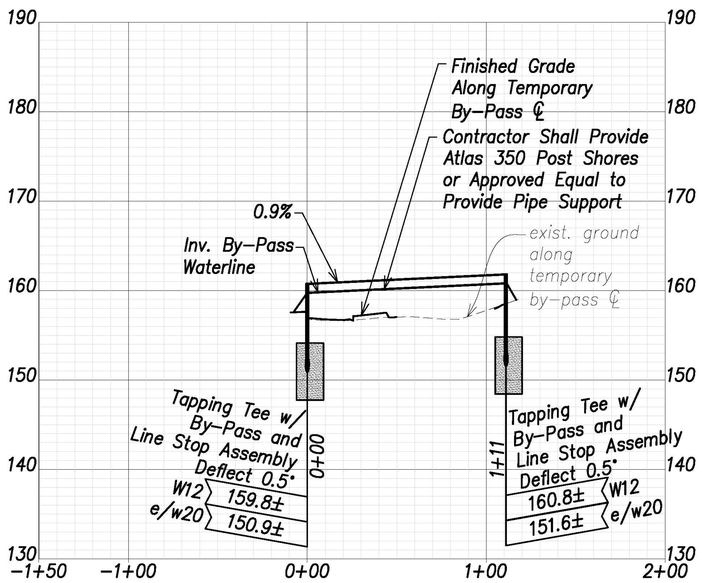

Temporary Waterline By-Pass 18 Profile

Scales: Hor.: 1" = 40'
Vert.: 1" = 8'

Schedule Note:
The construction working period for Temporary By-Passes 18 and 19 shall be limited to November to February, as approved by BWS.
5

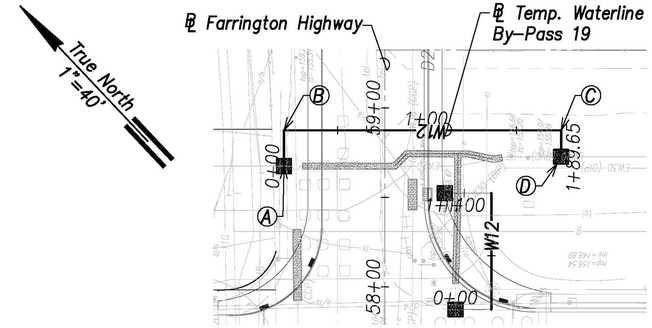

Temporary Waterline By-Pass 19 Plan
(℄ Sta. 58+32.4 Farrington Highway)

Scale: 1" = 40'

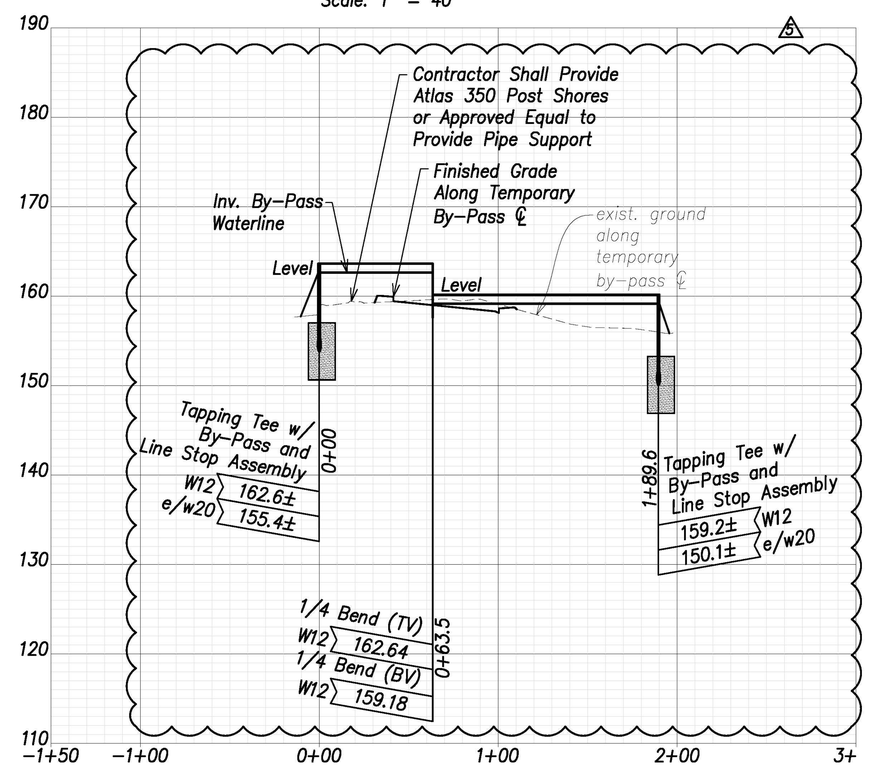

Temporary Waterline By-Pass 19 Profile

Scales: Hor.: 1" = 40'
Vert.: 1" = 8'

Ⓐ
℄ Sta. 58+67.5, o/s 56.5' Lt.
Farrington Highway
=℄ Sta. 0+00 By-Pass
Temporary By-Pass Connection
See Detail Shts. C-208 to C-211 (Typ.)

Ⓑ
℄ Sta. 58+87.5, o/s 56.5' Lt.
Farrington Highway
=℄ Sta. 0+20 By-Pass
1-12" 1/4 Bend

Ⓒ
℄ Sta. 58+87.5, o/s 98.4' Rt.
Farrington Highway
=℄ Sta. 1+74.9 By-Pass
1-12" 1/4 Bend

Ⓓ
℄ Sta. 58+72.7, o/s 98.4' Rt.
Farrington Highway
=℄ Sta. 1+89.7 By-Pass
Temporary By-Pass Connection
See Detail Shts. C-208 to C-211 (Typ.)

5

Notes:

1. Contractor shall provide mechanical joint pipes and fittings with retainer glands and/or flanged pipes and fittings to construct the temporary by-passes
2. The Contractor shall submit the construction schedule and construction phasing for the temporary by-passes to BWS for review and approval. The Contractor shall not commence work on the temporary by-passes until approval is obtained by BWS.

5

DATE	REVISION
07/15/22	5 Revised callouts; Added notes; Revised by-pass

APPROVED:

Manager and Chief Engineer, BWS (for work affecting BWS facilities in City/State R/W & BWS easements only) — DATE

Graphic Scales:
1" = 40' 40' 20' 0 40' 80'
1" = 8' 8' 4' 0 8' 16'
Scale in Feet

CRAIG W. L. LUKE
LICENSED PROFESSIONAL ENGINEER
No. 6635-C
HAWAII, U.S.A.

THIS WORK WAS PREPARED BY ME OR UNDER MY SUPERVISION AND CONSTRUCTION OF THIS PROJECT WILL BE UNDER MY OBSERVATION.

SIGNATURE — EXPIRATION DATE OF THE LICENSE: April 30, 2024

STATE OF HAWAII
DEPARTMENT OF TRANSPORTATION
HIGHWAYS DIVISION

Waterline Connection and Temporary By-Pass – 10

FARRINGTON HIGHWAY WIDENING
Kapolei Golf Course Road to Fort Weaver Road
Project No. 7101A-01-20

Scale: As Shown — Date: April 2022

SHEET No. C-177 OF 767 SHEETS

ORIGINAL PLAN — SURVEY PLOTTED BY — TRACED BY — DESIGNED BY — QUANTITIES BY — CHECKED BY — DATE — NOTE BOOK No.

FILE: K:\civil\23146 Farrington Hwy Widening\Dwg\Construction Dwgs\C-177 Waterline Connection and Temporary By-Pass - 10.dwg saved July 20, 2022

FED. ROAD DIST. NO.	STATE	PROJ. NO.	FISCAL YEAR	SHEET NO.	TOTAL SHEETS
HAWAII	HAW.	7101A-01-20	2021	179	767

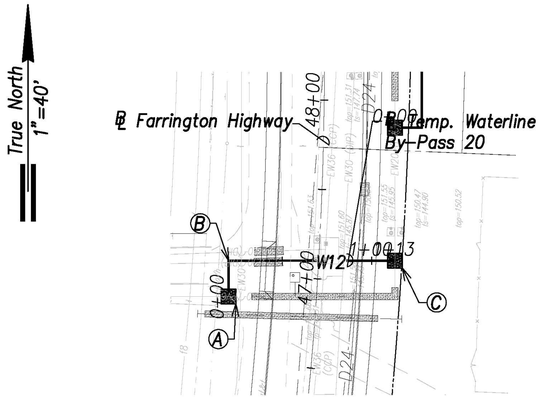

Temporary Waterline By-Pass 20 Plan
(℄ Sta. 46+87.6 Farrington Highway)
(℄ Sta. 46+92.8 Farrington Highway)

Scale: 1" = 40'

Ⓐ
℄ Sta. 46+63.0, o/s 41.5' Lt. Farrington Highway
=℄ Sta. 0+00 By-Pass
Temporary By-Pass Connection
See Detail Shts. C-208 to C-211 (Typ.)

Ⓑ
℄ Sta. 47+07.2, o/s 50.3' Lt. Farrington Highway
=℄ Sta. 0+20 By-Pass
1-24" 1/4 Bend

Ⓒ
℄ Sta. 47+12.5, o/s 42.6' Rt. Farrington Highway
=℄ Sta. 1+13 By-Pass
Temporary By-Pass Connection
See Detail Shts. C-208 to C-211 (Typ.)

Notes:
1. Contractor shall provide mechanical joint pipes and fittings with retainer glands and/or flanged pipes and fittings to construct the temporary by-passes

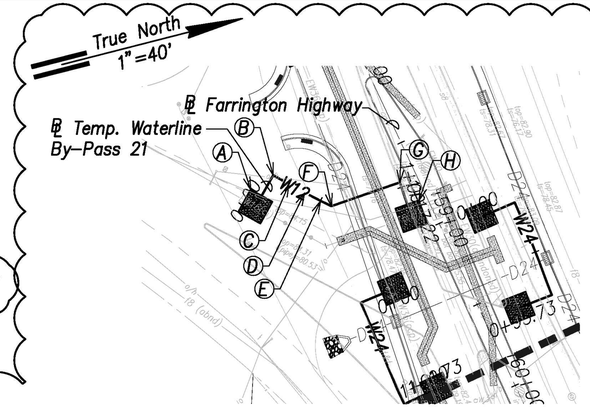

Temporary Waterline By-Pass 21 Plan
(℄ Sta. 158+47.9 Farrington Highway)
(℄ Sta. 158+89.8 Farrington Highway)

Scale: 1" = 40'

Ⓐ
℄ Sta. 158+47.9, o/s 88.7' Rt.
Farrington Highway
=℄ Sta. 0+00 By-Pass
Temporary By-Pass Connection
See Detail Shts. C-208 to C-211 (Typ.)

Ⓑ
℄ Sta. 158+36.2, o/s 72.5' Rt.
Farrington Highway
=℄ Sta. 0+20 By-Pass
1-12" 1/4 Bend

Ⓒ
℄ Sta. 158+44.4, o/s 66.6' Rt.
Farrington Highway
=℄ Sta. 0+30 By-Pass
1-12" Deflection

Ⓓ
℄ Sta. 158+60.4, o/s 54.6' Rt.
Farrington Highway
=℄ Sta. 0+40 By-Pass
1-12" Deflection

Ⓔ
℄ Sta. 158+52.4, o/s 60.7' Rt.
Farrington Highway
=℄ Sta. 0+50 By-Pass
1-12" 1/8 Bend

Ⓕ
℄ Sta. 158+65.7, o/s 50.4' Rt.
Farrington Highway
=℄ Sta. 0+50 By-Pass
1-12" Deflection

Ⓖ
℄ Sta. 158+69.9, o/s 10.2' Rt.
Farrington Highway
=℄ Sta. 0+97.2 By-Pass
1-12" 1/4 Bend

Ⓗ
℄ Sta. 158+89.8, o/s 12.3' Rt.
Farrington Highway
=℄ Sta. 1+17.2 By-Pass
Temporary By-Pass Connection
See Detail Shts. C-208 to C-211 (Typ.)

Schedule Note:
The construction working period for Temporary By-Passes 20 and 21 shall be limited to November to February, as approved by BWS.

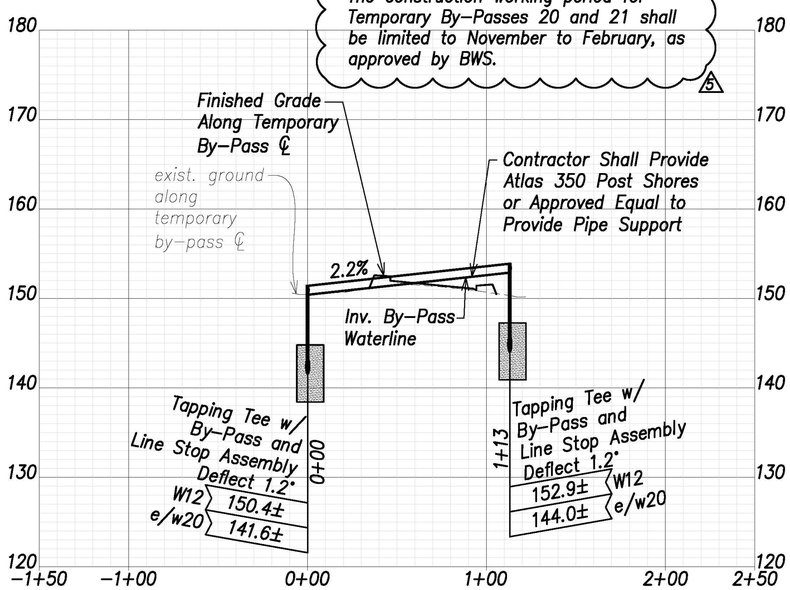

Temporary Waterline By-Pass 20 Profile

Scales: Hor.: 1" = 40'
Vert.: 1" = 8'

Notes:
2. The Contractor shall submit the construction schedule and construction phasing for the temporary by-passes to BWS for review and approval. The Contractor shall not commence work on the temporary by-passes until approval is obtained by BWS.

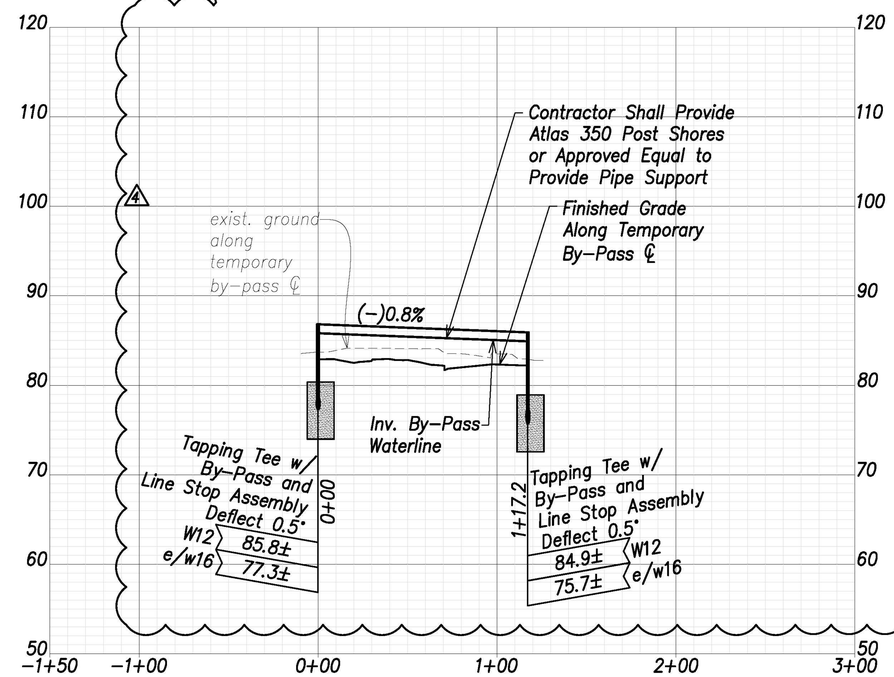

Temporary Waterline By-Pass 21 Profile

Scales: Hor.: 1" = 40'
Vert.: 1" = 8'

Graphic Scales:
1" = 40' 40' 20' 0 40' 80'
1" = 8' 8' 4' 0 8' 16'
Scale in Feet

APPROVED:

Manager and Chief Engineer, BWS (for work affecting BWS facilities in City/State R/W & BWS easements only) — DATE

CRAIG W. L. LUKE
LICENSED PROFESSIONAL ENGINEER
No. 6935-C
HAWAII, U.S.A.

THIS WORK WAS PREPARED BY ME OR UNDER MY SUPERVISION AND CONSTRUCTION OF THIS PROJECT WILL BE UNDER MY OBSERVATION.

SIGNATURE — April 30, 2024 EXPIRATION DATE OF THE LICENSE

DATE	REVISION
07/15/22	5 Revised callouts; added note

STATE OF HAWAII
DEPARTMENT OF TRANSPORTATION
HIGHWAYS DIVISION

Waterline Connection and Temporary By-Pass - 11

FARRINGTON HIGHWAY WIDENING
Kapolei Golf Course Road to Fort Weaver Road
Project No. 7101A-01-20

Scale: As Shown — Date: April 2022

SHEET No. C-178 OF 767 SHEETS

ORIGINAL PLAN — SURVEY PLOTTED BY — DRAWN BY — TRACED BY — DESIGNED BY — QUANTITIES BY — CHECKED BY — DATE — NOTE BOOK No.

FILE: K:\civil\23146 Farrington Hwy Widening\Dwg\Construction Dwgs\C-178 Waterline Connection and Temporary By-Pass - 11.dwg saved July 20, 2022

FED. ROAD DIST. NO.	STATE	PROJ. NO.	FISCAL YEAR	SHEET NO.	TOTAL SHEETS
HAWAII	HAW.	7101A-01-20	2021	180S-1	767

True North
1" =40'

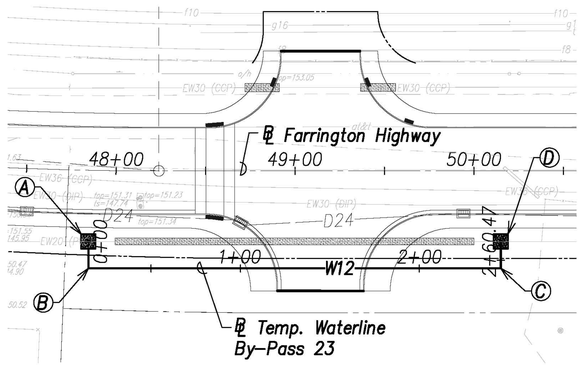

Temporary Waterline By–Pass 23 Plan
(℄ Sta. 47+85.3 Farrington Highway)
(℄ Sta. 50+15 Farrington Highway)

Scale: 1" = 40'

Ⓐ
℄ Sta. 47+85.3, o/s 39.8' Rt. Farrington Highway
=℄ Sta. 0+00 By–Pass
Temporary By–Pass Connection
See Detail Shts. C–208 to C–211 (Typ.)

Ⓑ
℄ Sta. 47+85.6, o/s 54.8' Rt. Farrington Highway
=℄ Sta. 0+15 By–Pass
1–12" 1/4 Bend, Fl.

Ⓒ
℄ Sta. 51+15, o/s 54.4' Rt. Farrington Highway
=℄ Sta. 2+45.5 By–Pass
1–12" 1/4 Bend, Fl.

Ⓓ
℄ Sta. 50+15, o/s 39.4' Rt. Farrington Highway
=℄ Sta. 2+60.5 By–Pass
Temporary By–Pass Connection
See Detail Shts. C–208 to C–211 (Typ.)

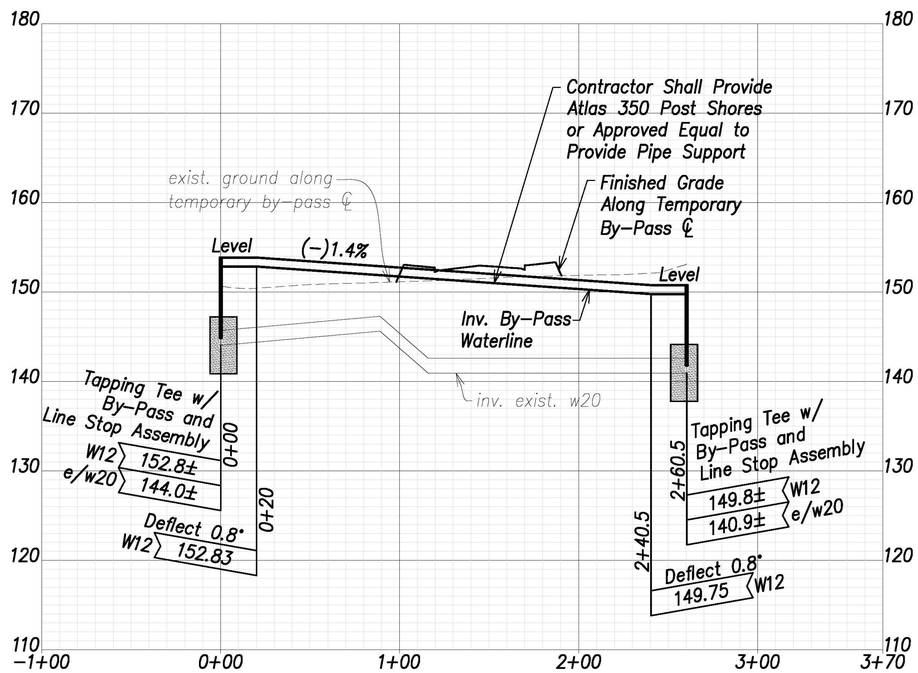

Temporary Waterline By–Pass 23 Profile

Scale: 1" = 40'

Schedule Note:
The construction working period for Temporary By–Pass 23 shall be limited to November to February, as approved by BWS.

APPROVED:	
Manager and Chief Engineer, BWS (for work affecting BWS facilities State R/W & BWS easements only)	DATE

Graphic Scales:
1" = 40' 40' 20' 0 40' 80'
1" = 8' 8' 4' 0 8' 16'
Scale in Feet

CRAIG W. L. LUKE
LICENSED PROFESSIONAL ENGINEER
No. 6935-C
HAWAII, U.S.A.

THIS WORK WAS PREPARED BY ME OR UNDER MY SUPERVISION AND CONSTRUCTION OF THIS PROJECT WILL BE UNDER MY OBSERVATION.

SIGNATURE — EXPIRATION DATE OF THE LICENSE: April 30, 2024

DATE	REVISION
07/15/22	5 New Sheet

STATE OF HAWAII
DEPARTMENT OF TRANSPORTATION
HIGHWAYS DIVISION

Waterline Connection and Temporary By–Pass – 12

FARRINGTON HIGHWAY WIDENING
Kapolei Golf Course Road to Fort Weaver Road
Project No. 7101A–01–20

Scale: As Shown — Date: April 2022

SHEET No. C-179 OF 767 SHEETS

ADD. 180S–1

ORIGINAL PLAN	SURVEY PLOTTED BY	DATE
	DRAWN BY	
	TRACED BY	
	DESIGNED BY	
NOTE BOOK	QUANTITIES BY	
No.	CHECKED BY	

FILE: K:\civil\23145 Farrington Hwy Widening\Dwg\Construction Dwgs\C-179 Waterline Connection and Temporary By-Pass - 12.dwg saved July 20, 2022