FED. ROAD DIST. NO.	STATE	PROJ. NO.	FISCAL YEAR	SHEET NO.	TOTAL SHEETS
HAWAII	HAW.	7101A-01-20	2021	182	767

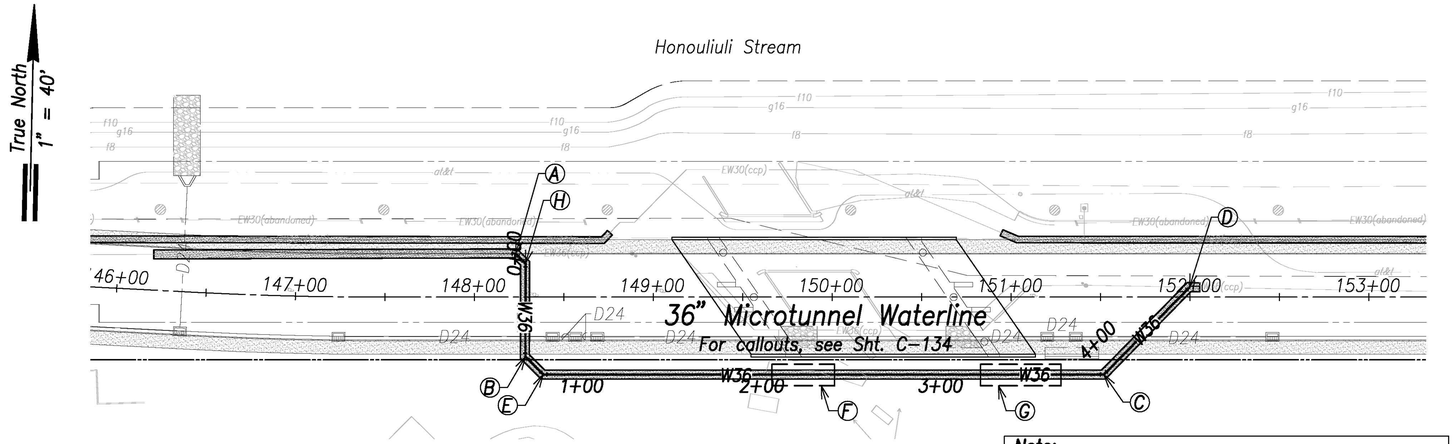

36" Waterline Microtunneling Plan

Scale: 1" = 40'

Note:
Contractor shall be responsible for the design, construction, maintenance, and restoration of the jacking and receiving pits and operational areas

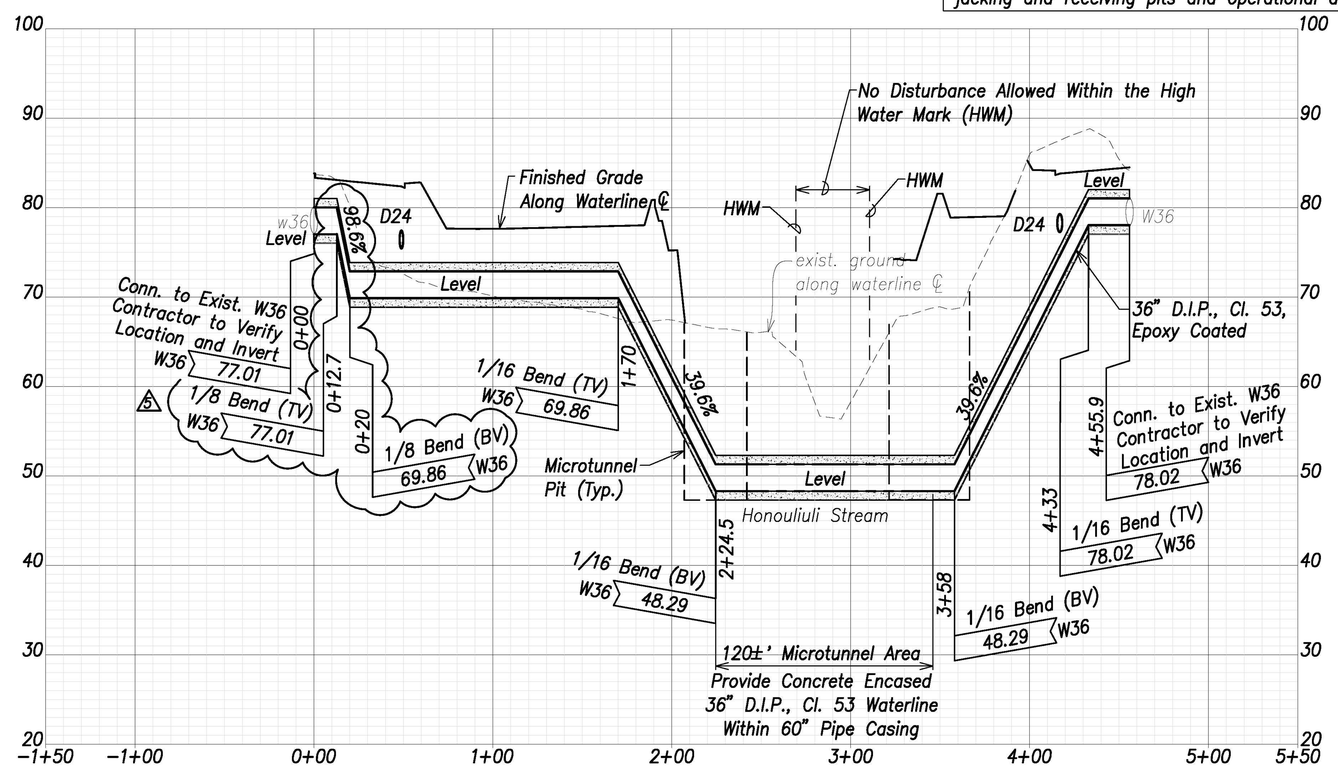

36" Waterline Microtunneling Profile

Scales: Hor.: 1" = 40'
Vert.: 1" = 8'

Ⓐ
℄ Sta. 0+00 36" Microtunnel Waterline
= ℄ Sta. 148+22.9, o/s 24.5' Lt. Farrington Highway Open Trench

Ⓑ
℄ Sta. 0+60 36" Microtunnel Waterline
= ℄ Sta. 148+28.3, o/s 33.2' Rt. Farrington Highway Open Trench

Ⓒ
℄ Sta. 3+87.5 36" Microtunnel Waterline
= ℄ Sta. 151+51.7, o/s 43.2' Rt. Farrington Highway Open Trench

Ⓓ
℄ Sta. 4+55.9 36" Microtunnel Waterline
= ℄ Sta. 152+05.6, o/s 5.7' Lt. Farrington Highway Open Trench

Ⓔ
℄ Sta. 0+74.1 36" Microtunnel Waterline
= ℄ Sta. 148+38.3, o/s 43.2' Rt. Farrington Highway Open Trench

Ⓕ
12' Wide x 35' Long Microtunnel Pit

Ⓖ
12' Wide x 45' Long Microtunnel Pit

Ⓗ
℄ Sta. 0+07.7 36" Microtunnel Waterline
= ℄ Sta. 148+28.4, o/s 19' Lt. Farrington Highway Open Trench

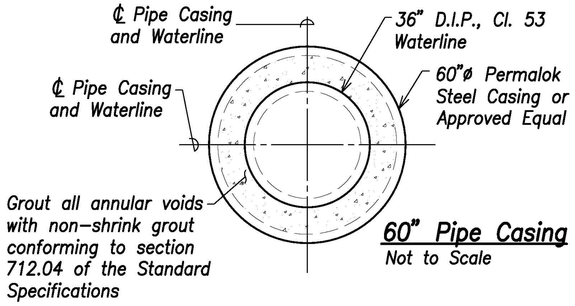

60" Pipe Casing

Not to Scale

07/15/22	5 Revised Waterline Profile
DATE	REVISION

STATE OF HAWAII
DEPARTMENT OF TRANSPORTATION
HIGHWAYS DIVISION

36" Waterline Microtunneling Plan & Profile at Honouliuli Stream

FARRINGTON HIGHWAY WIDENING
Kapolei Golf Course Road to Fort Weaver Road
Project No. 7101A-01-20

Scale: As Shown Date: April 2022

SHEET No. C-181 OF 767 SHEETS

APPROVED:

Manager and Chief Engineer, BWS (for work affecting BWS facilities in City/State R/W & BWS easements only) — DATE

CRAIG W. L. LUKE
LICENSED PROFESSIONAL ENGINEER
No. 6935-C
HAWAII, U.S.A.

THIS WORK WAS PREPARED BY ME OR UNDER MY SUPERVISION AND CONSTRUCTION OF THIS PROJECT WILL BE UNDER MY OBSERVATION.

SIGNATURE — EXPIRATION DATE OF THE LICENSE: April 30, 2024

ORIGINAL PLAN	SURVEY PLOTTED BY	DATE
	DRAWN BY	
	TRACED BY	
NOTE BOOK	DESIGNED BY	
	QUANTITIES BY	
No.	CHECKED BY	

FILE: \\DMTC-FS\Projects\civil\23146 Farrington Hwy Widening\Dwg\Construction Dwgs\C-181 Directional Drilling - Water - 36 Inch Waterline.dwg saved July 19, 2022

FED. ROAD DIST. NO.	STATE	PROJ. NO.	FISCAL YEAR	SHEET NO.	TOTAL SHEETS
HAWAII	HAW.	7101A-01-20	2021	183	767

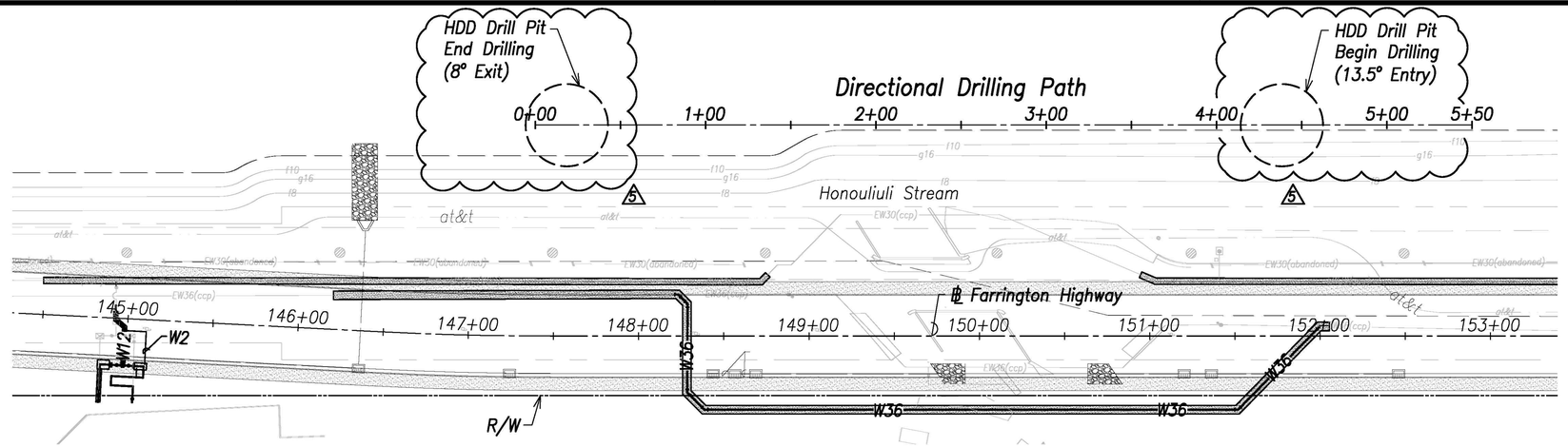

AT&T Directional Drilling Plan

Scale: 1" = 40'

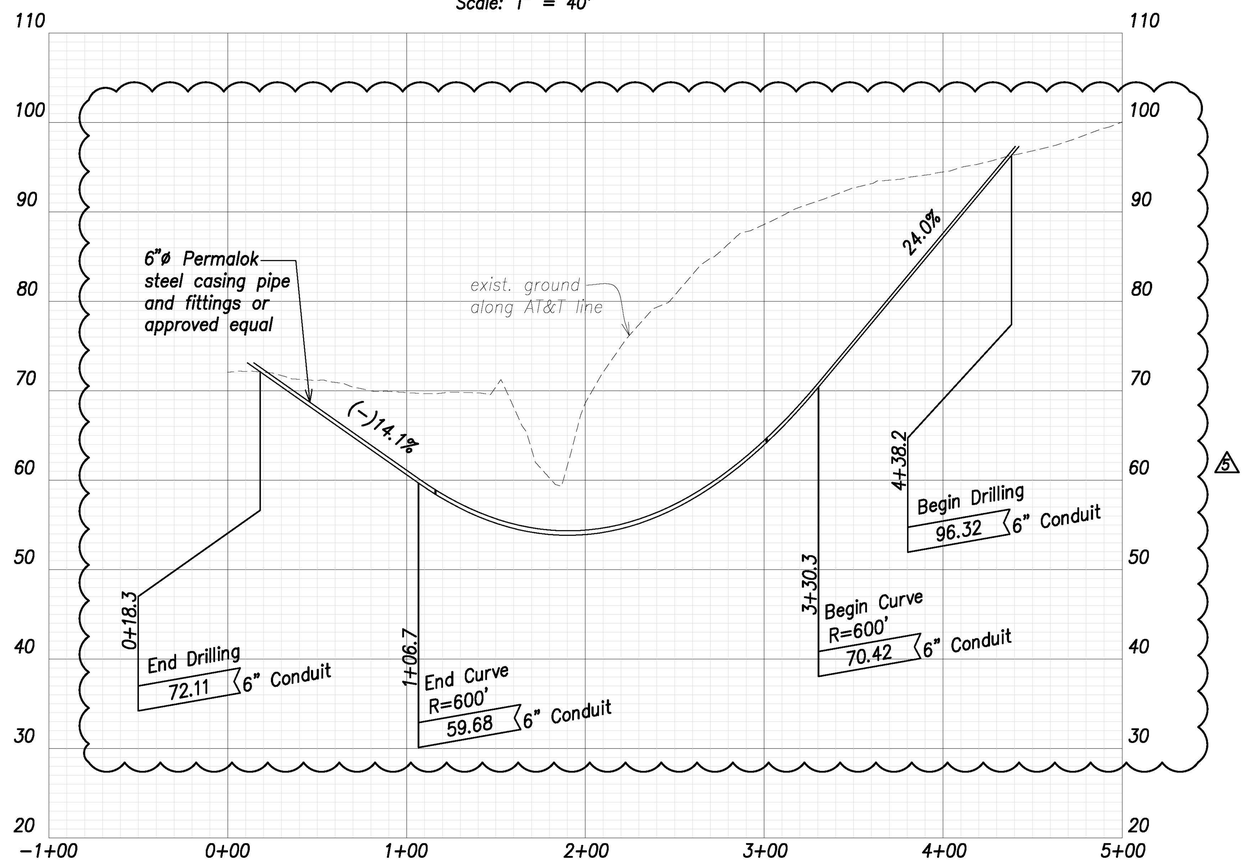

AT&T Directional Drilling Profile

Scales: Hor.: 1" = 40'
Vert.: 1" = 8'

Note:
Contractor shall be responsible for the design, construction, maintenance, and restoration of the HDD drill pits and operational areas

ORIGINAL PLAN	SURVEY PLOTTED BY	DATE
	TRACED BY	
	DESIGNED BY	
NOTE BOOK	QUANTITIES BY	
No.	CHECKED BY	

DATE	REVISION
07/15/22	5 Revised directional drilling

STATE OF HAWAII
DEPARTMENT OF TRANSPORTATION
HIGHWAYS DIVISION

AT&T Directional Drilling Plan & Profile

FARRINGTON HIGHWAY WIDENING
Kapolei Golf Course Road to Fort Weaver Road
Project No. 7101A-01-20

Scale: As Shown Date: April 2022

CRAIG W. L. LUKE
LICENSED PROFESSIONAL ENGINEER
No. 6935-C
HAWAII, U.S.A.

THIS WORK WAS PREPARED BY ME OR UNDER MY SUPERVISION AND CONSTRUCTION OF THIS PROJECT WILL BE UNDER MY OBSERVATION.

SIGNATURE — EXPIRATION DATE OF THE LICENSE: April 30, 2024

SHEET No. C-182 OF 767 SHEETS

FILE: K:\civil\23145 Farrington Hwy Widening\Dwg\Construction Dwgs\C-182 Directional Drilling - ATT.dwg saved July 19, 2022