FED. ROAD DIST. NO.	STATE	PROJ. NO.	FISCAL YEAR	SHEET NO.	TOTAL SHEETS
HAWAII	HAW.	7101A-02-97	1998	ADD.4	102

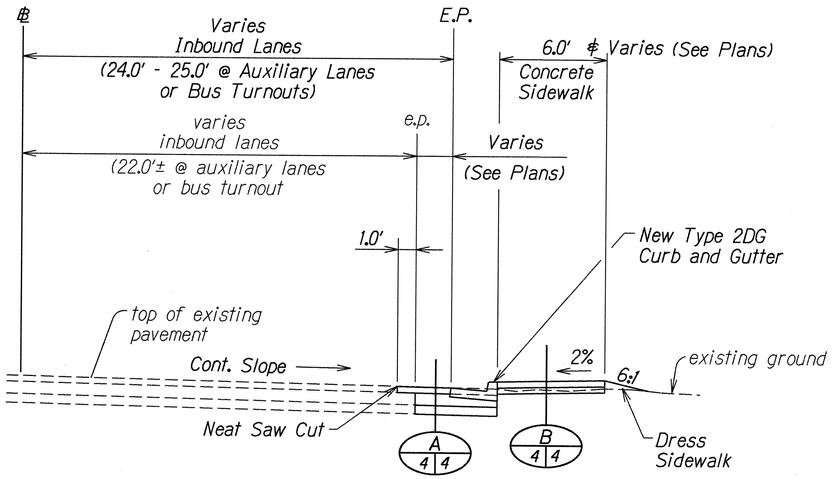

TYPICAL SECTION TS-1 19-22 4

Scale: 1/4"=1'-0"

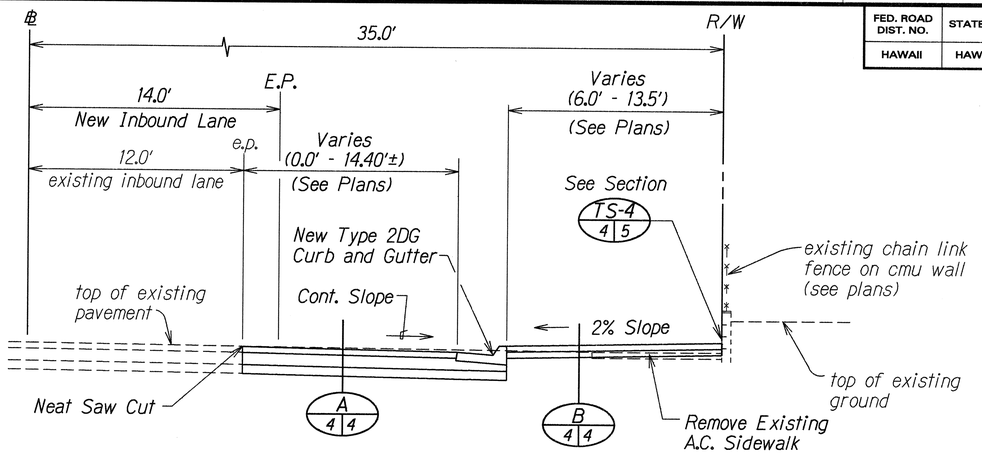

PAVEMENT WIDENING AND NEW SIDEWALK SECTION TS-3 20 4

Scale: 1/4"=1'-0"

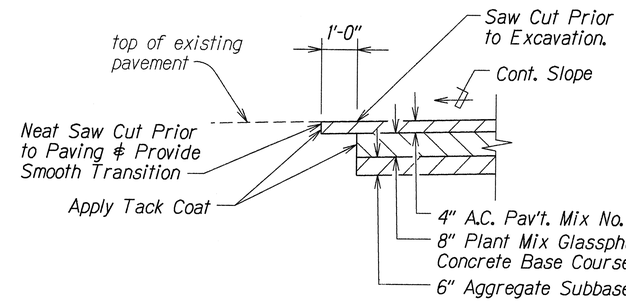

DETAIL A 4-9 4

Scale: 1"=1'-0"

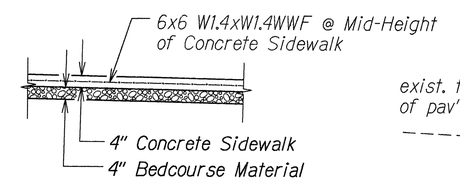

DETAIL B 4-6,8,9 4

Scale: 1"=1'-0"

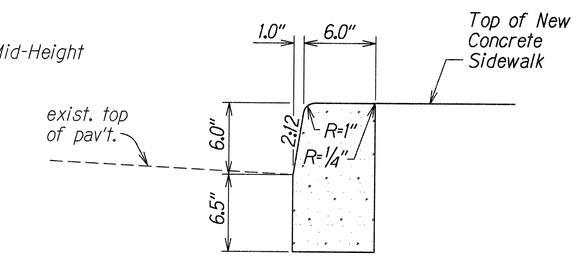

CURB, MODIFIED TYPE "2D" DETAIL

Scale: 2"=1'-0"

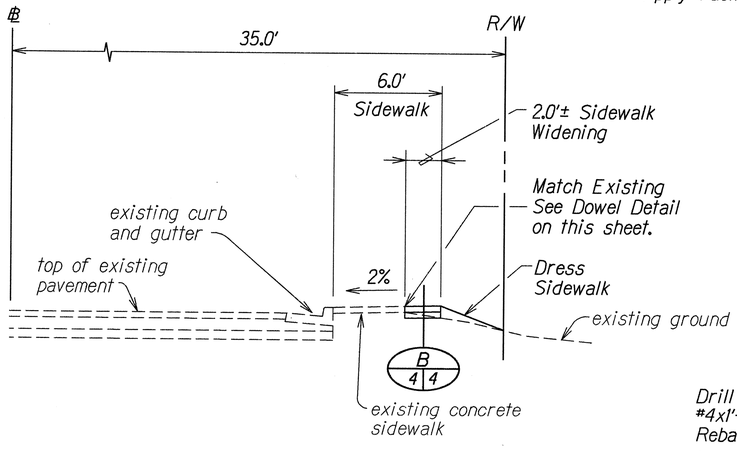

SIDEWALK WIDENING SECTION

℄ STA. 73+51± TO ℄ STA. 76+87± TS-2 19 4

Scale: 1/4"=1'-0"

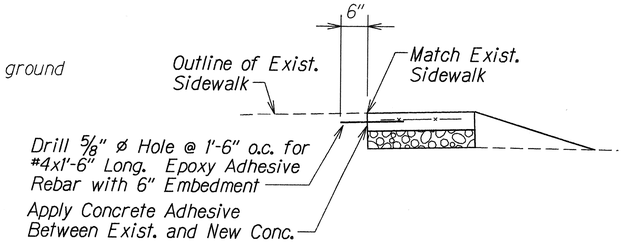

Note: Installation of dowels, including drilling, epoxy and concrete adhesive, shall be incidental to Sidewalk.

DOWEL DETAIL

Scale: 3/4"=1'-0"

DATE	REVISION
6-17-98	Added Dowel Detail and Revise Detail "A".

STATE OF HAWAII
DEPARTMENT OF TRANSPORTATION
HIGHWAYS DIVISION

TYPICAL SECTIONS

FARRINGTON HIGHWAY SIDEWALKS
Leoole Street to Awanui Street and
Leoku Street to Paiwa Street
Project No. 7101A-02-97

Scale: As Noted Date: May 1998

SHEET No. 1 OF 6 SHEETS

ADD.4

ORIGINAL PLAN
SURVEY PLOTTED BY
DRAWN BY G.A. MH
TRACED BY
DESIGNED BY M. Quodala
QUANTITIES BY
CHECKED BY
DATE 5-7-98
NOTE BOOK dd5.lana
No. dfardts01

FED. ROAD DIST. NO.	STATE	PROJ. NO.	FISCAL YEAR	SHEET NO.	TOTAL SHEETS
HAWAII	HAW.	7101A-02-97	1998	ADD.5	102

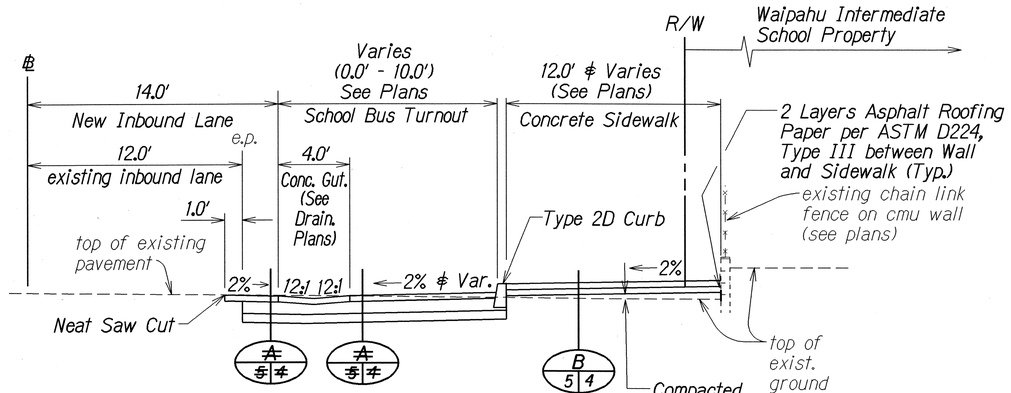

For P.C.C. Pavement Detail
See Plan Sheet No. 7R

TYPICAL SECTION — TS-4
Scale: 1/4"=1'-0" — 4,11,20,22 | 5

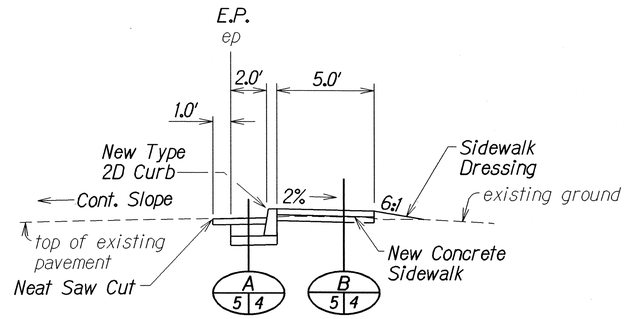

TYPICAL SECTION
S.E. SECTION WITH TYPE 2D CURBING — TS-5
Scale: 1/4"=1'-0" — 22 | 5

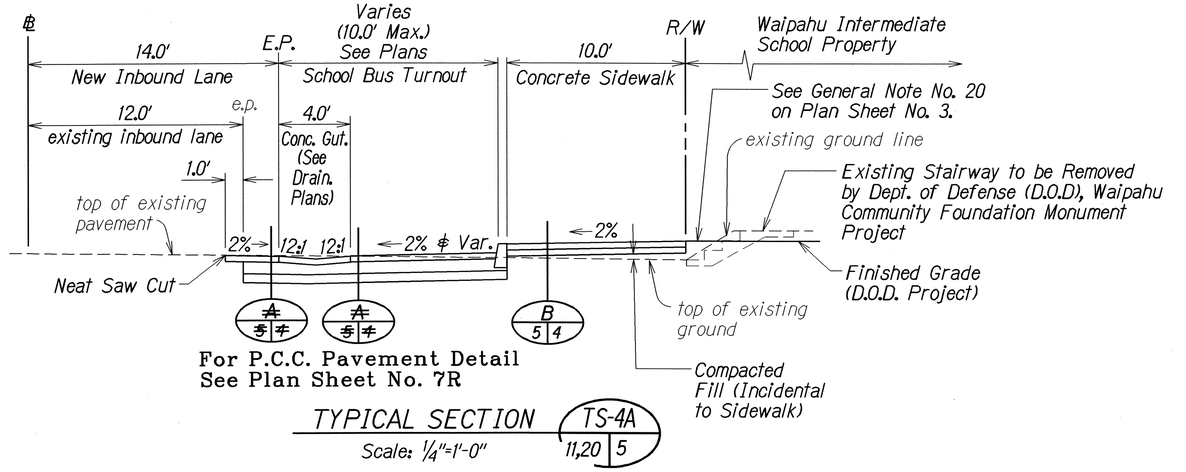

For P.C.C. Pavement Detail
See Plan Sheet No. 7R

TYPICAL SECTION — TS-4A
Scale: 1/4"=1'-0" — 11,20 | 5

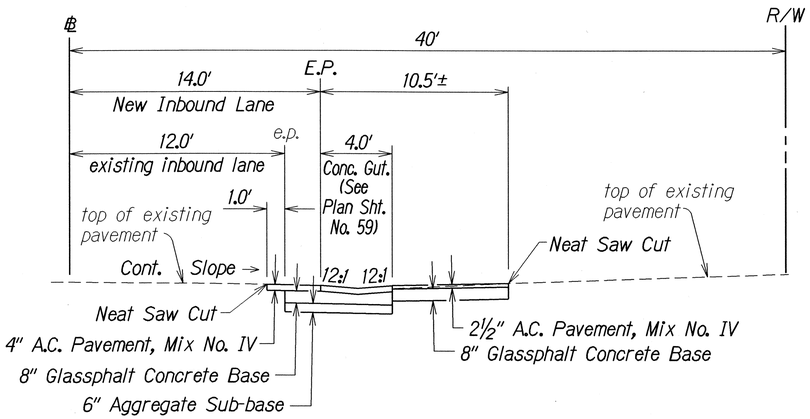

TYPICAL SECTION AT
ASPHALT CONCRETE DRIVEWAY — TS-5A
Scale: 1/4"=1'-0" — ADD.21 | 5

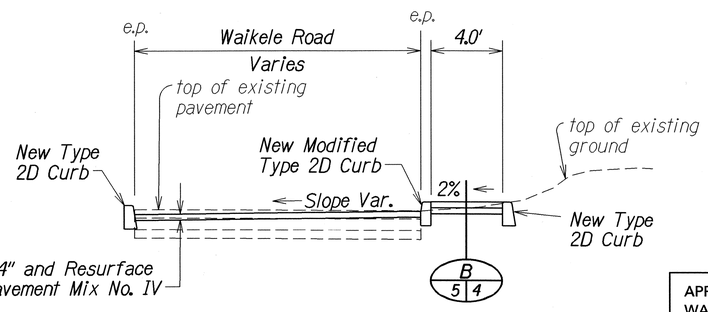

(Note: See Pavement Grade
Plan on Plan Sht. No. 11)

TYPICAL SECTION — TS-4B
Scale: 1/4"=1'-0" — 11,20 | 5

APPROVED FOR CONSTRUCTION WITHIN
WAIPAHU INTERMEDIATE SCHOOL:

CORRINE FUJIEDA, VICE PRINCIPAL — DATE

LEGEND FOR
AS-BUILT POSTINGS

~~	Squiggly line for as-built deletion
~~100.00~~	Double line for as-built deletion
Roadway	Text for as-built posting

DATE	REVISION
5-04-99	Revised E.P. location for TS-5.
6-10-98	Added Typical Section at Asphalt Concrete Driveway, TS-5A.

STATE OF HAWAII
DEPARTMENT OF TRANSPORTATION
HIGHWAYS DIVISION

TYPICAL SECTIONS

FARRINGTON HIGHWAY SIDEWALKS
Leoole Street to Awanui Street and
Leoku Street to Paiwa Street
Project No. 7101A-02-97

Scale: As Noted — Date: May 1998

SHEET No. 2 OF 6 SHEETS

ORIGINAL PLAN
SURVEY PLOTTED BY
DRAWN BY
TRACED BY
DESIGNED BY
QUANTITIES BY
CHECKED BY
DATE
NOTE BOOK
N.

"AS-BUILT"

C.O. ADD. 5

FED. ROAD DIST. NO.	STATE	PROJ. NO.	FISCAL YEAR	SHEET NO.	TOTAL SHEETS
HAWAII	HAW.	7101A-02-97	1998	6	102

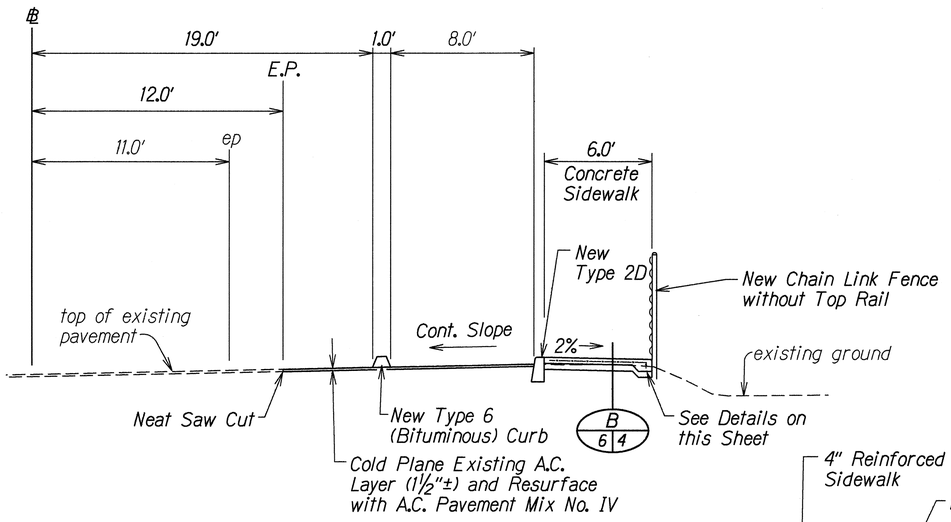

TYPICAL SECTION TS-6
Scale: ¼"=1'-0"

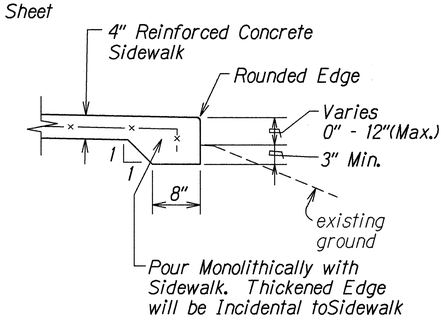

TYPICAL DETAIL
Scale: 1"=1'-0"

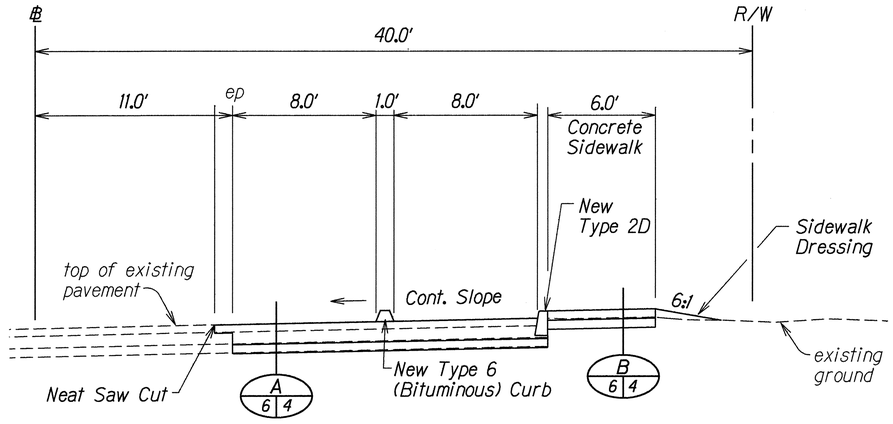

TYPICAL SECTION TS-8
Scale: ¼"=1'-0"

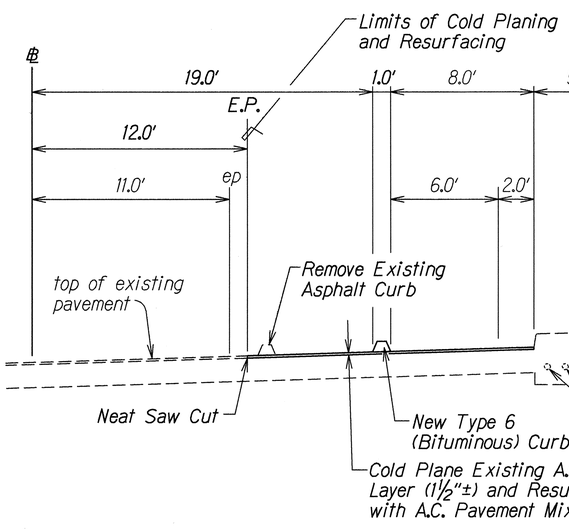

TYPICAL PARTIAL SECTION AT WAIPAHU CANAL STRUCTURE TS-7
Scale: ¼"=1'-0"
22 6

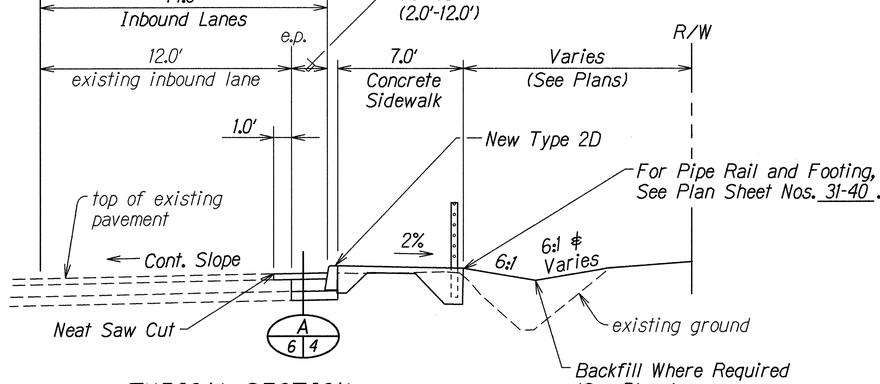

TYPICAL SECTION SIDEWALK WITH THICKENED EDGE AND ALONG METAL RAILINGS TS-9
Scale: ¼"=1'-0"
22,23 6

Note:

In cold planing the pavement over the structure, the Contractor shall exercise care not to damage any portion of the structure, especially the slab, joints, drain pipes or reinforcement. Any damage to the structure during the cold planing operations shall be repaired by the Contractor at his own expense. Repair work shall be as directed by the Engineer. The Contractor shall verify the existing pavement thickness by hand digging at various locations. this work shall be considered incidental to cold planing and will not be paid for separately.

DATE	REVISION
7/30/98	Added Plan Sheet No. Reference for Typical Section TS-9 per Addendum No. 1.

STATE OF HAWAII
DEPARTMENT OF TRANSPORTATION
HIGHWAYS DIVISION

TYPICAL SECTIONS

FARRINGTON HIGHWAY SIDEWALKS
Leoole Street to Awanui Street and
Leoku Street to Paiwa Street
Project No. 7101A-02-97

Scale: As Noted Date: May 1998

SHEET No. 3 OF 6 SHEETS

ORIGINAL PLAN	SURVEY PLOTTED BY	DRAWN BY GA. Mtl	TRACED BY	DESIGNED BY	QUANTITIES BY	CHECKED BY	DATE 5-7-98
	NOTE BOOK	M. Ocalde					
	dd5.lang						
	dfardis03						
	No.						

6R

FED. ROAD DIST. NO.	STATE	FED. AID PROJ. NO.	FISCAL YEAR	SHEET NO.	TOTAL SHEETS
HAWAII	HAW.	7101A-01-97	1998	7	102

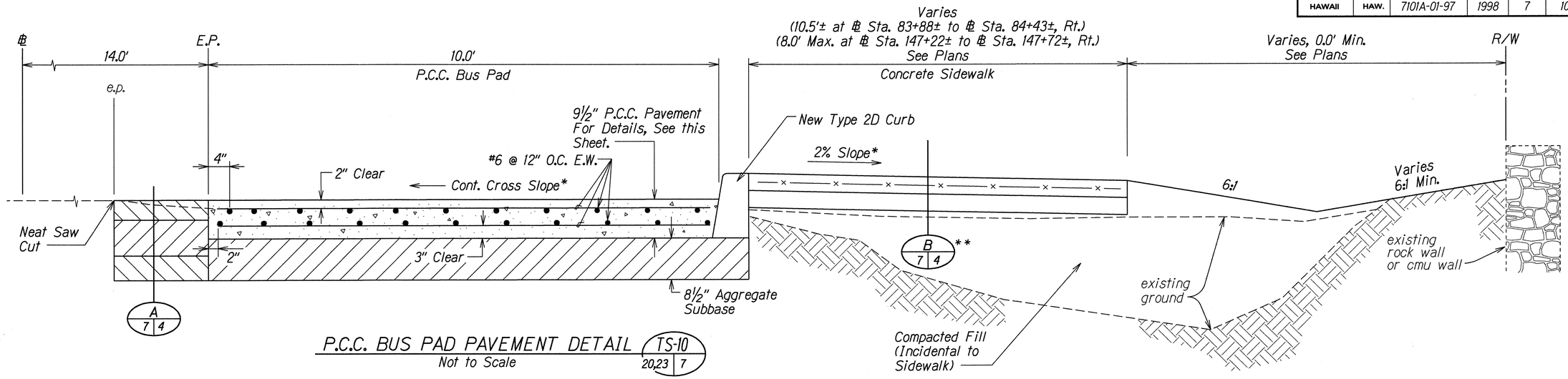

P.C.C. BUS PAD PAVEMENT DETAIL (TS-10 / 20,23 | 7)

Not to Scale

*For Bus Pad at ℄ Sta. 83+88±, Rt. to ℄ Sta. 84+43±, Rt., See Pavement Grade Plan on this Sheet

**Applicable only for Sidewalk Between ℄ Sta. 83+88± to ℄ Sta. 84+43±. See Special Sidewalk Details on Plan Sheet Nos. 31-40 for ℄ Sta. 147+22±, Rt. to ℄ Sta. 147+72±, Rt.

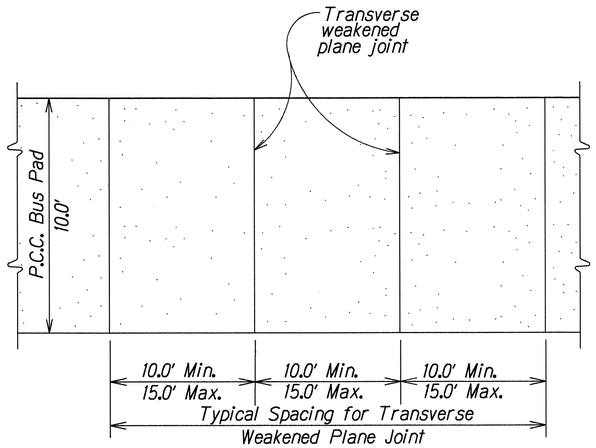

TYPICAL JOINT LOCATION AND LAYOUT PLAN FOR P.C.C. BUS PAD

Not To Scale

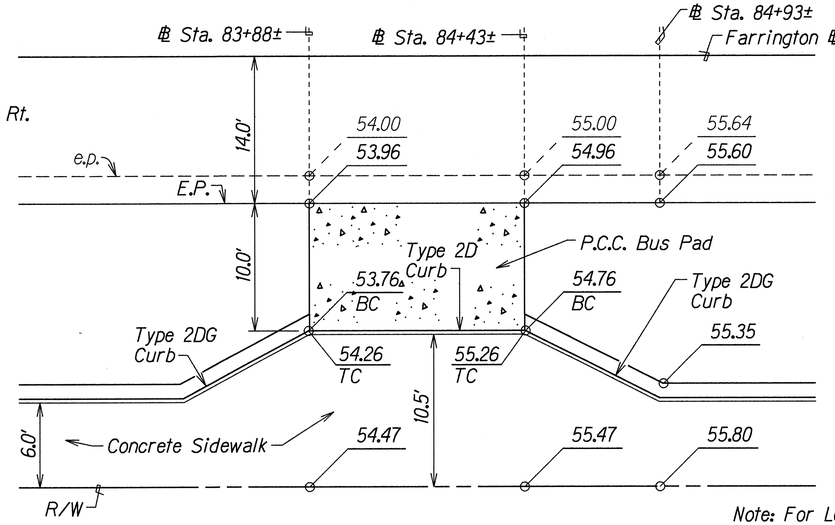

Note: For Legend, See Plan Sheet No. 11.

PAVEMENT GRADE PLAN

℄ STA. 83+88±, RT. TO ℄ STA. 84+43±, RT.

Not To Scale

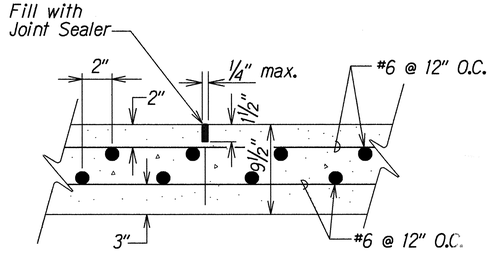

TRANSVERSE WEAKENED PLANE JOINT FOR P.C.C. BUS PAD (SAWED CONTRACTION)

Not To Scale

Notes:

1. Roadway excavation required for the installation of P.C.C. bus stops, and disposal of excavated materials shall be considered incidental to Item No. 411.1212, 9½ Inch Reinforced Concrete Pavement, and will not be paid for separately.
2. Transverse weakened plane joints required for the installation of P.C.C. bus pads shall be considered incidental to Item No. 411.1212, 9-1/2 Inch Reinforced Concrete Pavement, and will not be paid for separately.
3. Aggregate Subbase will be paid for under Item No. 305.1110 - Aggregate Subbase.

DATE	REVISION
7/30/98	Added Plan Sheet No. Reference for Typical Section TS-10 per Addendum No. 1.

STATE OF HAWAII
DEPARTMENT OF TRANSPORTATION
HIGHWAYS DIVISION

TYPICAL DETAIL

FARRINGTON HIGHWAY SIDEWALKS
Leoku Street to Paiwa Street and
Leoole Street to Awanui Street
Project No. 7101A-02-97

Scale: As Noted Date: May 1998

SHEET No. 4 OF 6 SHEETS

7R

ORIGINAL PLAN | NOTE BOOK dd5Jana | No. dfardts06 | SURVEY PLOTTED BY | DRAWN BY G. Atiburcio, MH | TRACED BY | DESIGNED BY J. Fronda, M. Quodala | QUANTITIES BY | CHECKED BY | DATE 7-30-98

FED. ROAD DIST. NO.	STATE	PROJ. NO.	FISCAL YEAR	SHEET NO.	TOTAL SHEETS
HAWAII	HAW.	7101A-02-97	1998	8	102

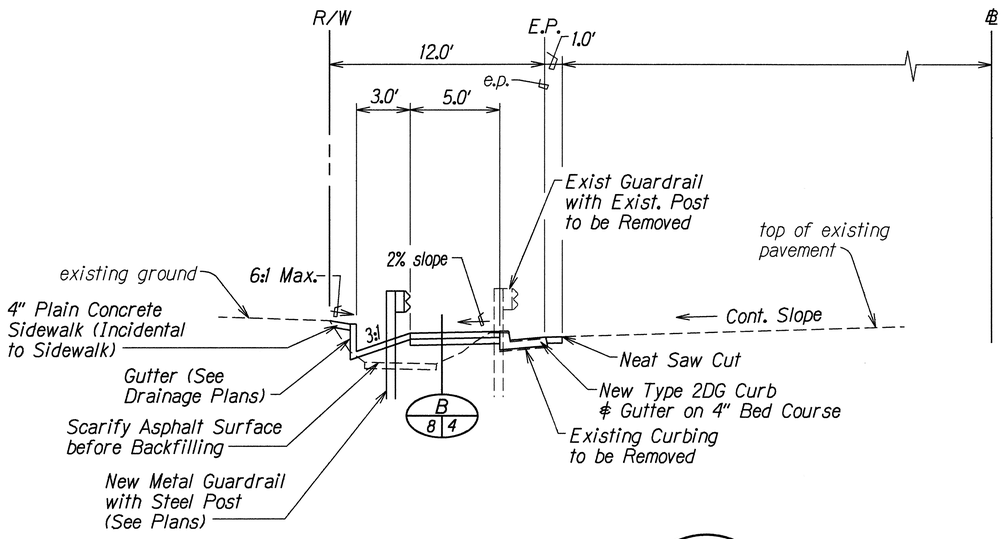

TYPICAL SECTION OBTS-3 19 8

Scale: 1/4"=1'-0"

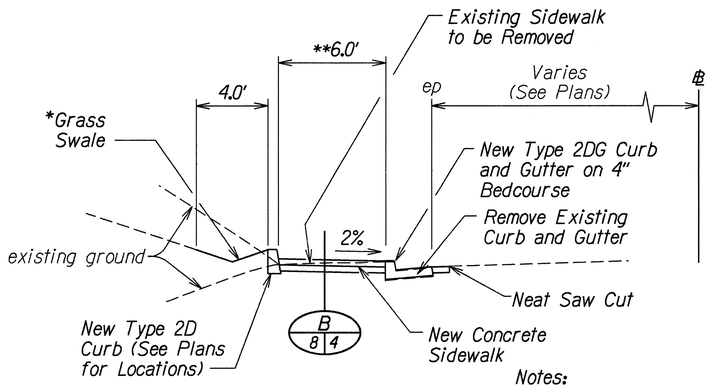

Notes:

* Construct 31314 Min. or 21214 Max. Grass Swale to Fit Existing Ground Conditiond Between ℄ Sta. 65+00± to ℄ Sta. 65+93± (Incidental to Sidewalk) and Curb, Type 2D from ℄ Sta. 89+34± to ℄ Sta. 90+80±.

** Reinforced Concrete Sidewalk width = 12.0'± from ℄ Sta. 89+34± to ℄ Sta. 90+00.

TYPICAL OUTBOUND SECTION OBTS-1 19-23 8

Scale: 1/4"=1'-0"

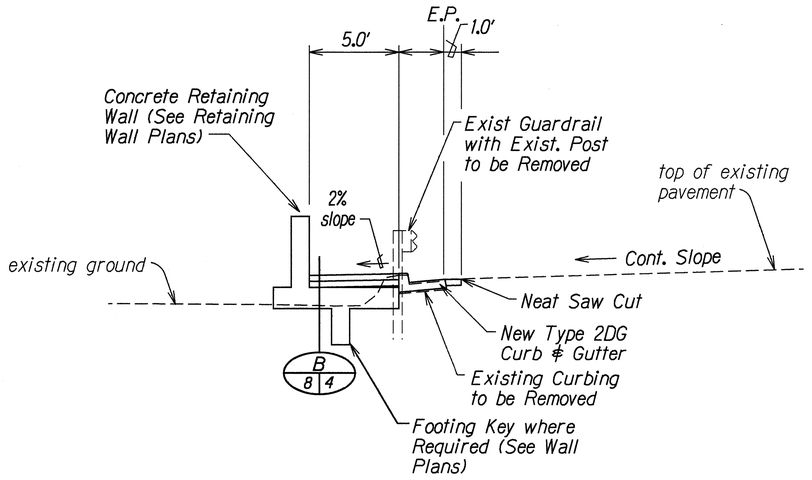

TYPICAL SECTION OBTS-2 19 8

Scale: 1/4"=1'-0"

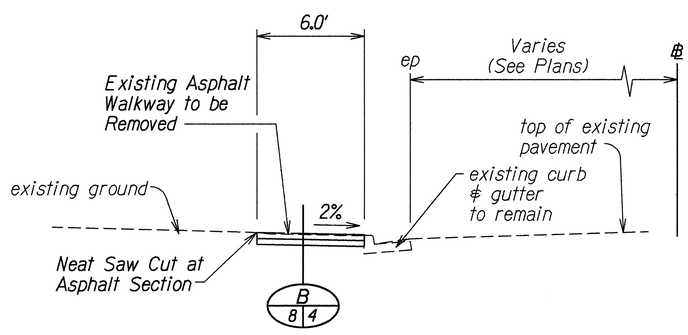

TYPICAL OUTBOUND SECTION OBTS-1A 19-22 8

Scale: 1/4"=1'-0"

DATE	REVISION
5-03-99	Revised * note and added ** note for OBTS-1.

STATE OF HAWAII
DEPARTMENT OF TRANSPORTATION
HIGHWAYS DIVISION

TYPICAL SECTIONS

FARRINGTON HIGHWAY SIDEWALKS
Leoole Street to Awanui Street and
Leoku Street to Paiwa Street
Project No. 7101A-02-97

Scale: As Noted Date: May 1998

SHEET No. 5 OF 6 SHEETS

C.O. 8

ORIGINAL PLAN
SURVEY PLOTTED BY
DRAWN BY G.A. MH
TRACED BY
DESIGNED BY M. Quodala
QUANTITIES BY
CHECKED BY
DATE 5-03-99
NOTE BOOK dd5.lena dfardts04
No.

FED. ROAD DIST. NO.	STATE	PROJ. NO.	FISCAL YEAR	SHEET NO.	TOTAL SHEETS
HAWAII	HAW.	7101A-02-97	1998	9	102

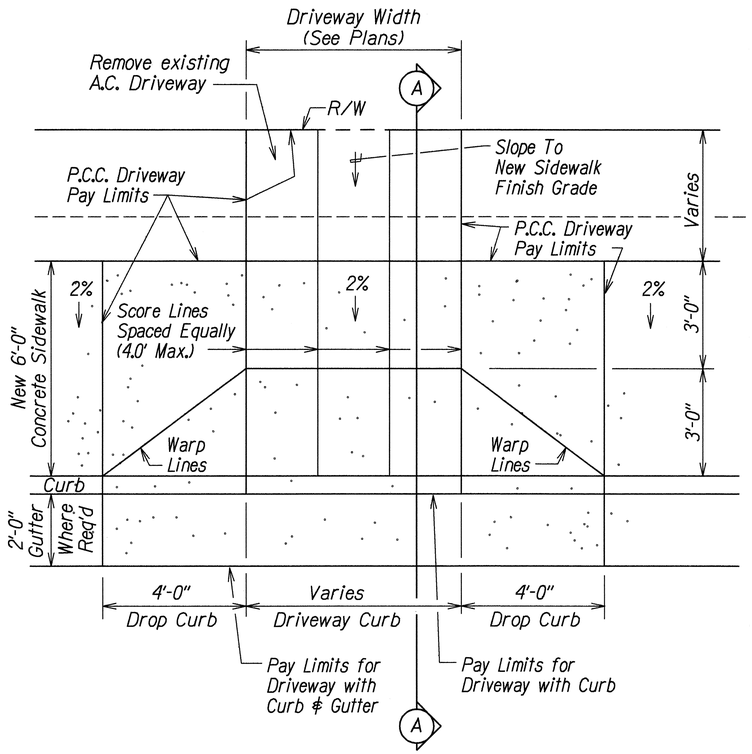

PLAN
Scale: ½"= 1'-0"

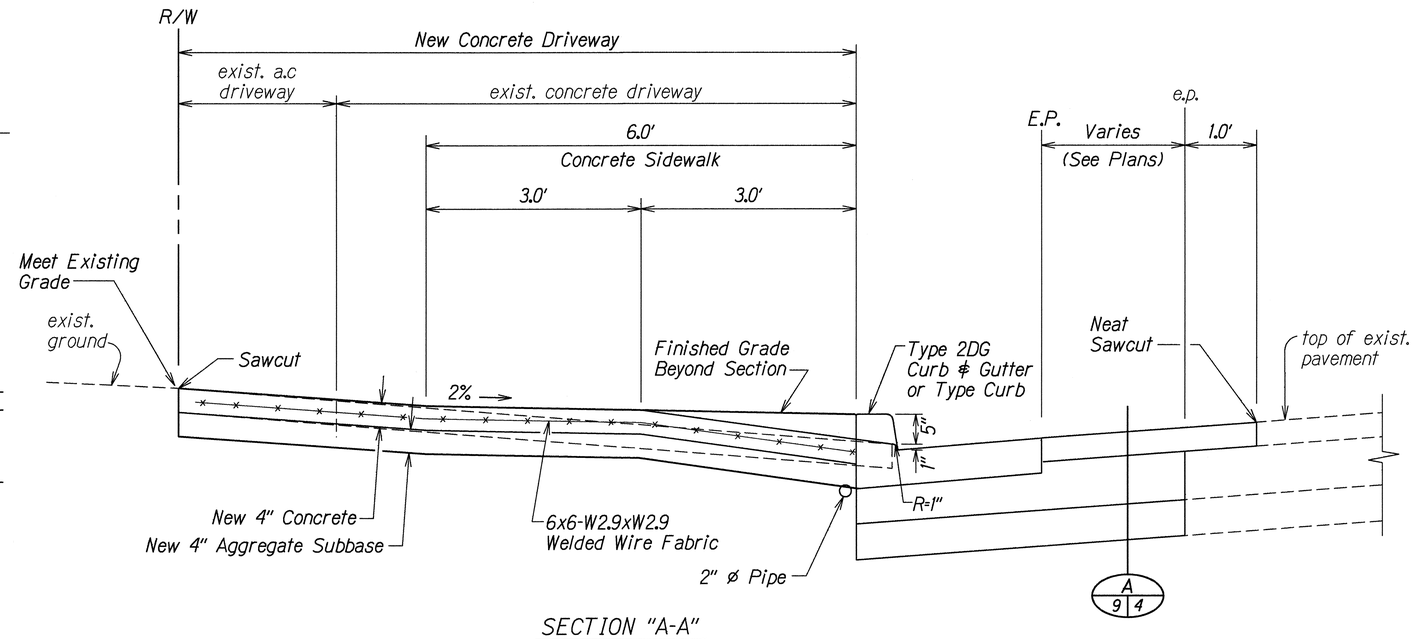

SECTION "A-A"
Scale: 1"=1'-0"

NOTES:

1. Removal and Disposal of existing driveway will be incidental to Item No. 610.0400 - 4-Inch Reinforced Concrete Driveways.
2. For additional details, see Standard Plan Sheet No. D-05.
3. For driveway at ℄ Sta. 132+00±, Rt., reverse 2% cross slope and meet existing grade at Right-of-Way Line. See Section TS-5 / 22 / 5 for the sidewalk section.

REINFORCED CONCRETE DROP DRIVEWAY TSDW 22 9

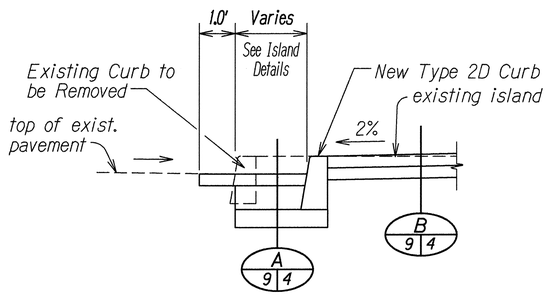

ISLAND RECONSTRUCTION SECTION TSISLE 10 9
Scale: ½"= 1'-0"

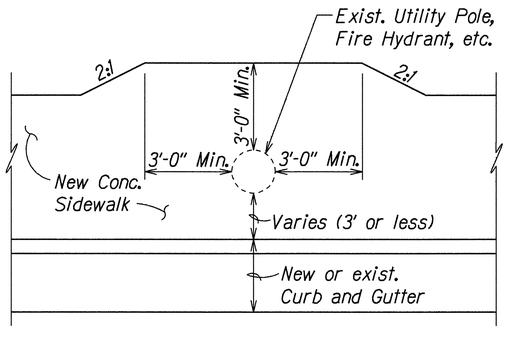

SIDEWALK DETAIL
(Existing Obstruction within the Sidewalk)
Not to Scale

DATE	REVISION
7/30/98	Revised "Neat Sawcut" Call-Out for Reinforced Concrete Drop Driveway TSDW per Addendum No. 1.

STATE OF HAWAII
DEPARTMENT OF TRANSPORTATION
HIGHWAYS DIVISION

TYPICAL SECTION & DETAIL

FARRINGTON HIGHWAY SIDEWALKS
Leoku Street to Paiwa Street and
Leoole Street to Awanui Street
Project No. 7101A-02-97

Scale: As Noted Date: May 1998

SHEET No. 6 OF 6 SHEETS

ORIGINAL PLAN	SURVEY PLOTTED BY	DATE 7-30-98
	DRAWN BY Mitsuyoshi, Mtt, G.A.	
NOTE: MMC dds,bmp /Tsdw1s05	TRACED BY	
	DESIGNED BY W. Goodale	
	QUANTITIES BY	
	CHECKED BY	