FED. ROAD DIST. NO.	STATE	~~FED. AID~~ PROJ. NO.	FISCAL YEAR	SHEET NO.	TOTAL SHEETS
HAWAII	HAW.	90A-01-76	1977	4	12

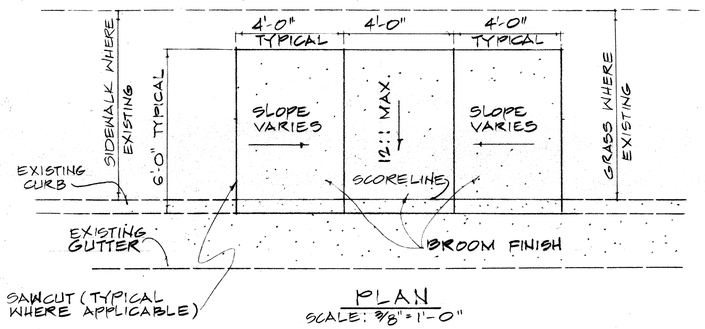

PLAN
SCALE: 3/8" = 1'-0"

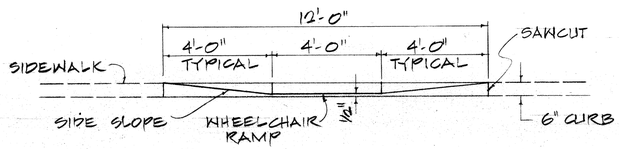

ELEVATION
SCALE: 3/8" = 1'-0"

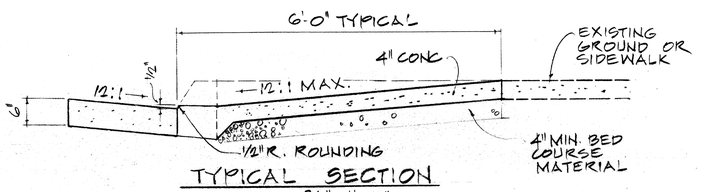

TYPICAL SECTION
SCALE: 3/4" = 1'-0"

WHEELCHAIR RAMP
SCALE: AS NOTED

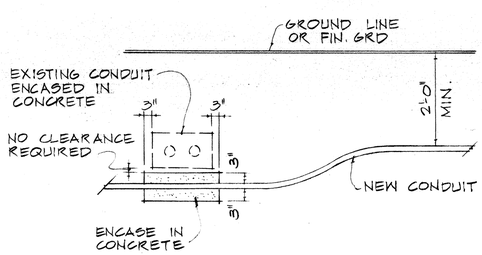

CONDUIT BY-PASS DETAIL
NOT TO SCALE

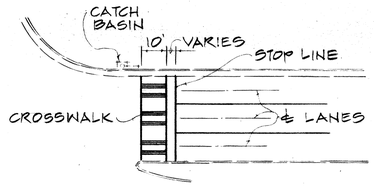

NOTE: SET ALL CROSSWALKS AWAY FROM CATCH BASINS

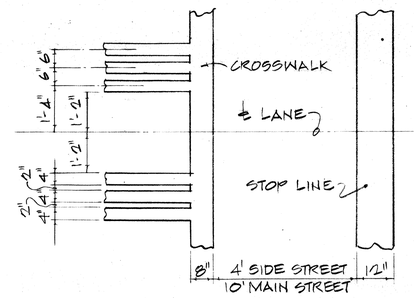

CROSSWALK & STOP LINE

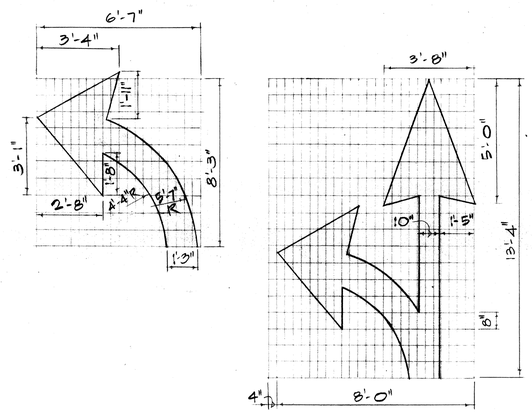

PAVEMENT ARROWS
NOT TO SCALE

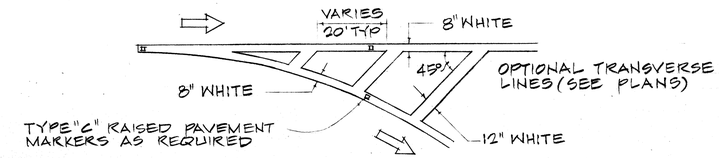

CHANNELIZING ISLAND
NOT TO SCALE

GENERAL NOTES: PAVEMENT MARKINGS

1. PAVEMENT MARKINGS SHALL CONFORM TO THE "MANUAL ON UNIFORM TRAFFIC CONTROL DEVICES FOR STREETS AND HIGHWAYS," 1971, AND AS SHOWN ON THE PLANS.
2. LAYOUT OF PAVEMENT MARKINGS AND STRIPING SHALL BE DONE BY THE CONTRACTOR. CONTRACTOR SHALL CHECK LAYOUT OF MARKERS & STRIPING WITH THE ENGINEER PRIOR TO PERFORMING WORK.

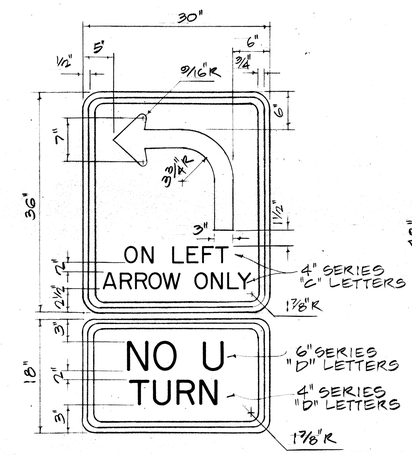

R 17 - 3

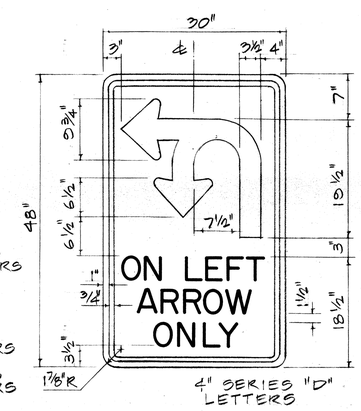

R 17 - 1

NOTE:
SIGNS SHALL CONFORM TO SPECIFICATIONS FOR REGULATORY & WARNING SIGNS.

THEODORE S. KAWAHIGASHI
REGISTERED PROFESSIONAL ENGINEER
No. 3244-E
HAWAII, U.S.A.

THIS WORK WAS PREPARED BY ME OR UNDER MY SUPERVISION
Signature

STATE OF HAWAII
DEPARTMENT OF TRANSPORTATION
HIGHWAYS DIVISION

FARRINGTON HIGHWAY
TRAFFIC SIGNALS AT LEOKANE ST.
PROJ. NO. 90A-01-76
MISC., CROSSWALK & STRIPING DETAILS
SCALE: AS SHOWN DATE: JAN. 4, 1977
SHEET No. 1 OF 1 SHEETS

ORIGINAL PLAN	SURVEY PLOTTED BY	DATE
	DRAWN BY	
	TRACED BY	
NOTE BOOK	DESIGNED BY	
	QUANTITIES BY	
No.	CHECKED BY	

PRINTED ON NO. 1000H CLEARPRINT
JN 2401