FED. ROAD DIST. NO.	STATE	FED. AID PROJ. NO.	FISCAL YEAR	SHEET NO.	TOTAL SHEETS
HAWAII	HAW.	DE-0200(803)	2000	47	79

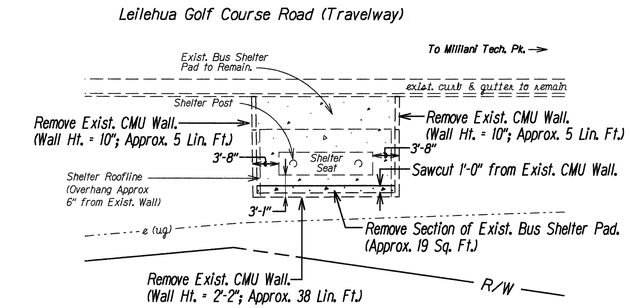

Note: The Exist. Bus Shelter Seat, Roof, and Posts are to Remain.

BUS SHELTER DEMOLITION - PLAN VIEW

Scale: 1" = 10'

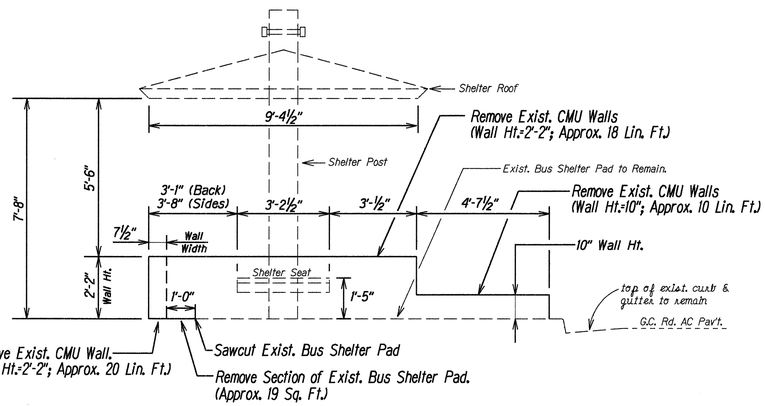

Note: The Exist. Bus Shelter Seat, Roof, and Posts are to Remain.

BUS SHELTER DEMOLITION - ELEVATION VIEW

Not To Scale

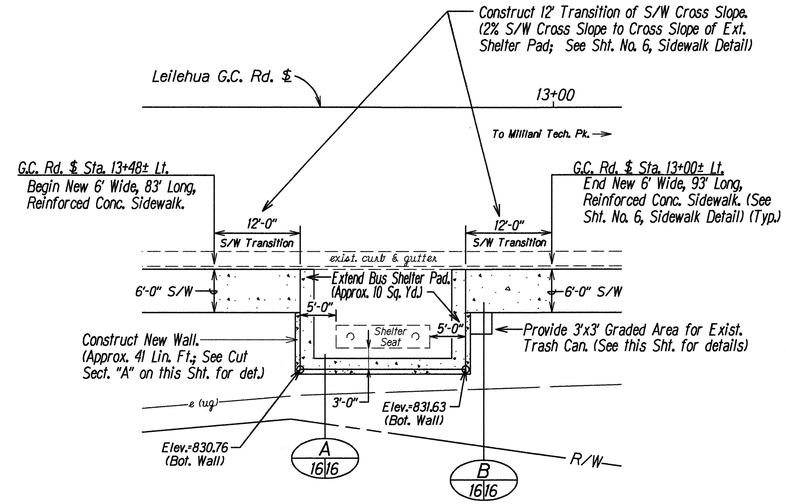

Notes:

1. Match Top of Extended Bus Shelter Pad flush to Top of Exist. Shelter Pad and/or Curb & Gutter.
2. The Contractor Shall Provide the Space Between the New Wall and the Shelter Seat as Shown in the Plan View Above.

BUS SHELTER RECONSTRUCTION - PLAN VIEW

Scale: 1" = 10'

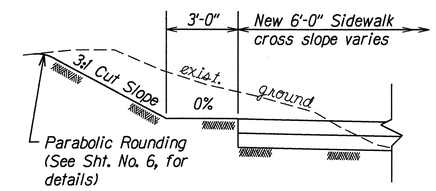

GRADING FOR BUS SHELTER TRASH CAN

Not To Scale

C 16/16

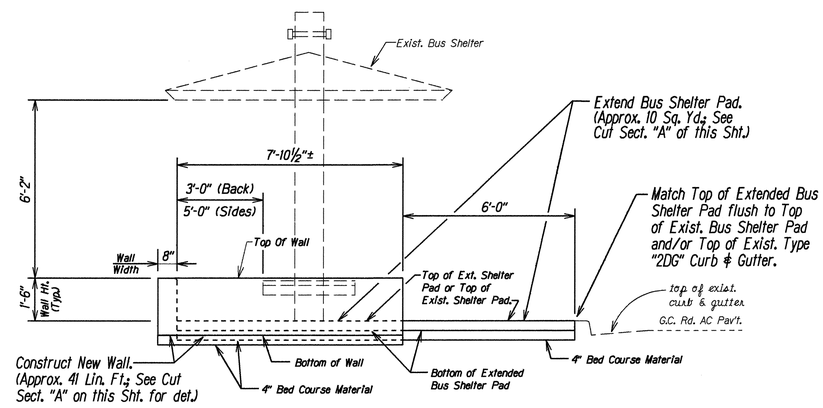

BUS SHELTER RECONSTRUCTION - PLAN VIEW

Scale: 1" = 10'

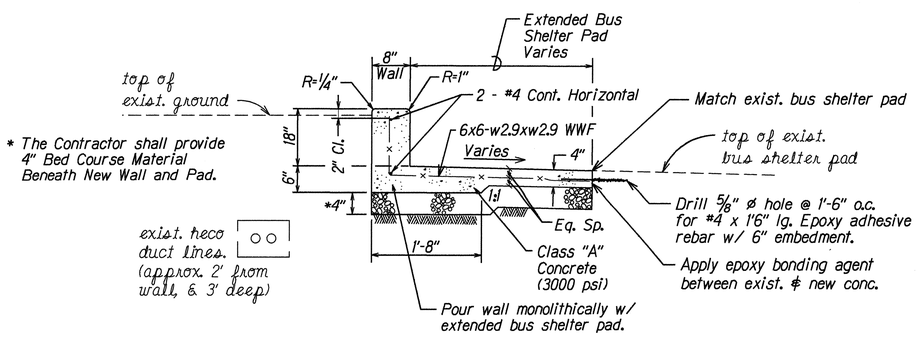

NEW WALL FOR GOLF COURSE ROAD BUS SHELTER

Not to Scale

A 16/16

ORIGINAL PLAN	SURVEY PLOTTED BY	DATE 12-27-00
	DRAWN BY JWT-LS	
	TRACED BY	
NOTE BOOK	DESIGNED BY JWT-LS	
No. Vol/pg	QUANTITIES BY	
	CHECKED BY	

STATE OF HAWAII
DEPARTMENT OF TRANSPORTATION
HIGHWAYS DIVISION

BUS SHELTER DETAILS

KAMEHAMEHA HIGHWAY
Intersection Improvements at
Leilehua Golf Course Road
Fed. Aid Project No. DE-0200(803)

Scale As Shown — Date: Apr. 27, 2000

SHEET No. 1 OF 1 SHEETS