FED. ROAD DIST. NO.	STATE	PROJ. NO.	FISCAL YEAR	SHEET NO.	TOTAL SHEETS
HAWAII	HAW.	99D-01-79	1980	5	19

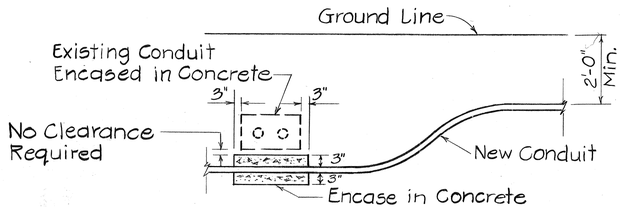

CONDUIT BY-PASS DETAIL

NOT TO SCALE

NOTE:
See Note No. 8 of General Notes on Sheet No. 2.

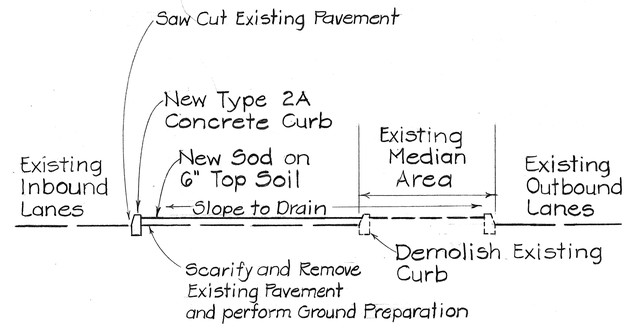

SECTION "A-A"

1/4" = 1'-0"

NOTE:
EXCEPT AS NOTED, COVER DETAILS SHALL CONFORM TO TYPE "B" PULLBOX COVER.
SEE PLAN SHT. NO. 17.

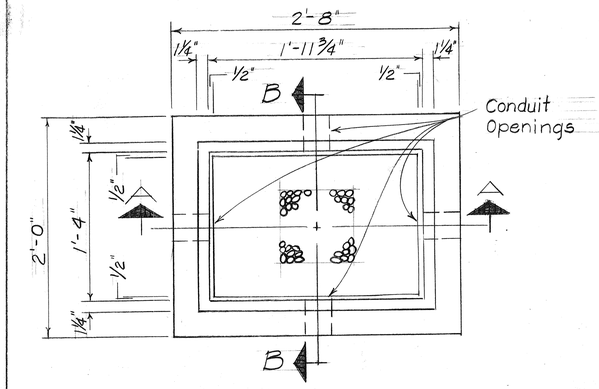

PLAN

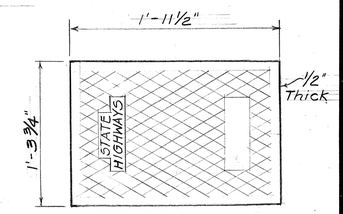

PLAN OF COVER

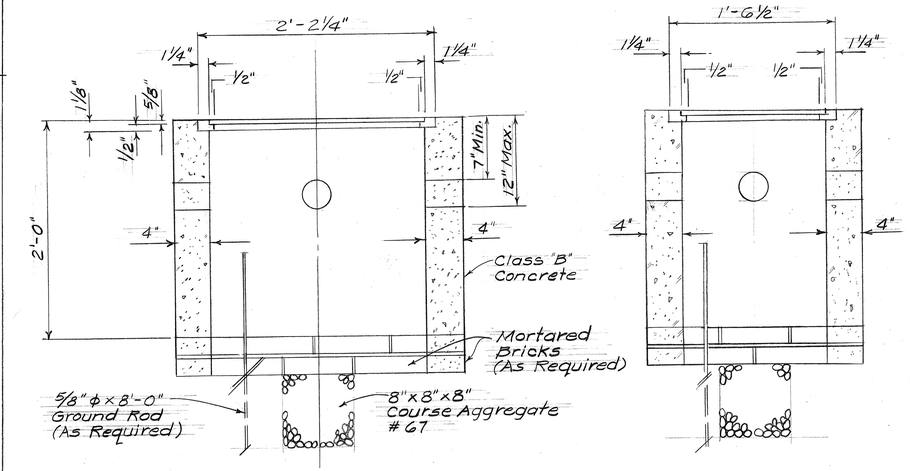

SECTION "A-A"

SECTION "B-B"

TYPE "D" PULLBOX

SCALE: 1 1/2" = 1'-0"

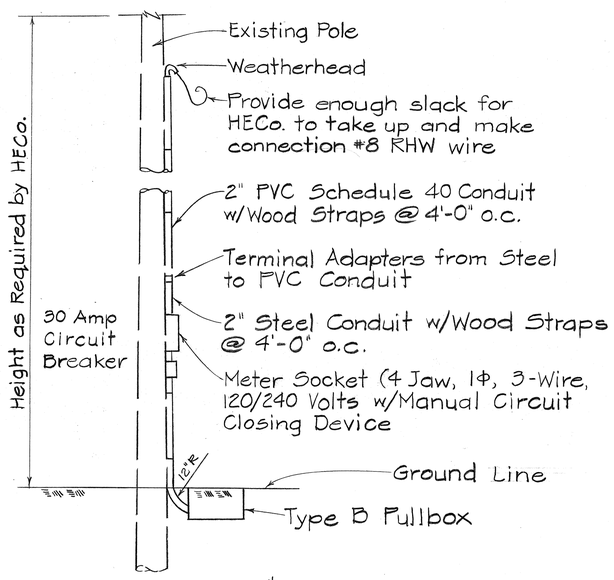

P.P. #18

SERVICE POLE DETAIL

NOT TO SCALE

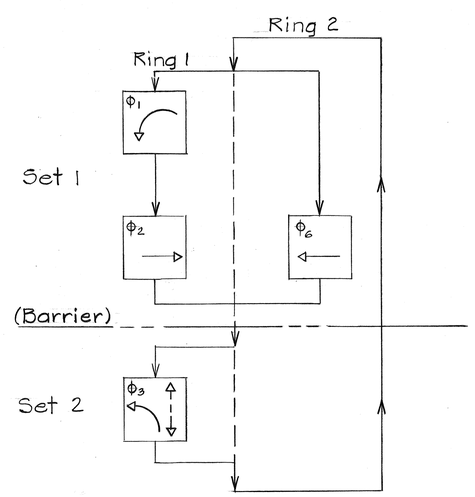

PHASING DIAGRAM

ORIGINAL PLAN	SURVEY PLOTTED BY	DATE
	DRAWN BY	"
	TRACED BY	"
NOTE BOOK	DESIGNED BY	"
	QUANTITIES BY	"
No.	CHECKED BY	"

STATE OF HAWAII
DEPARTMENT OF TRANSPORTATION
HIGHWAYS DIVISION

MISCELLANEOUS DETAILS

KAMEHAMEHA HWY.
AT ACACIA RD.
PROJ. NO. 99D-01-79

SCALE: AS SHOWN DEC. 1978

SHEET No. 5 OF 19 SHEETS

FED. ROAD DIST. NO.	STATE	PROJ. NO.	FISCAL YEAR	SHEET NO.	TOTAL SHEETS
HAWAII	HAW.	99D-01-79	1980	6	19

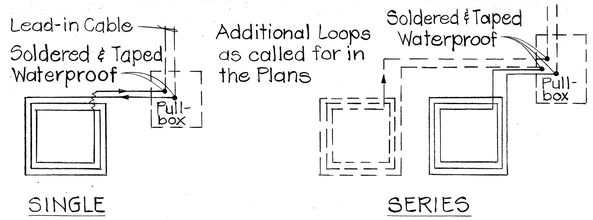

TYPICAL LOOP CONFIGURATIONS

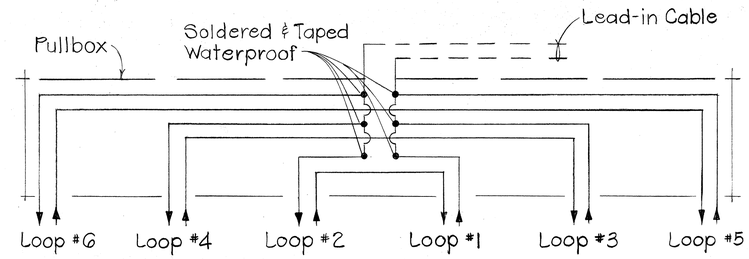

TYPICAL SERIES - PARALLEL LOOP CONNECTION

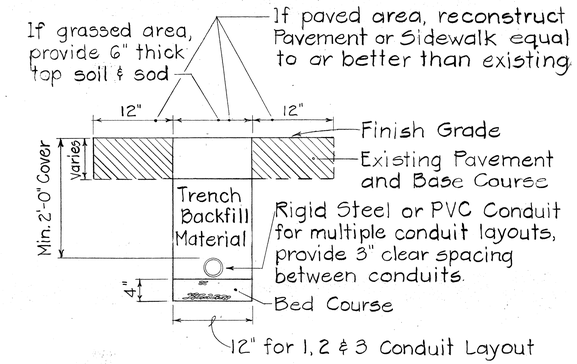

TYPICAL TRENCH SECTION FOR CONDUIT

NOTE:

1. All conduits under roadways shall be steel or PVC schedule 80. All other conduits shall be steel or PVC schedule 40.

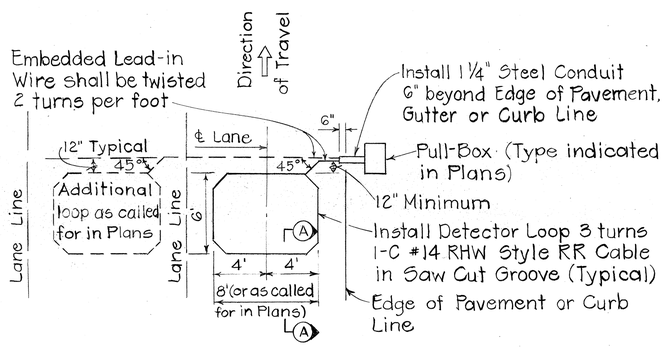

PLAN - THRU LANE LOOP LAYOUT

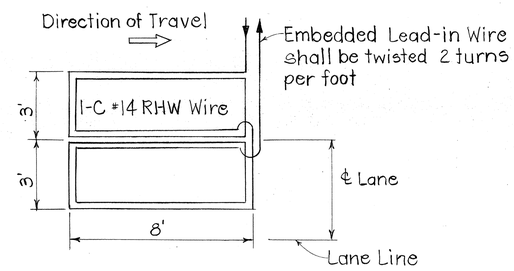

TYPICAL WIRING FOR 8'×6' LOOP DETECTOR

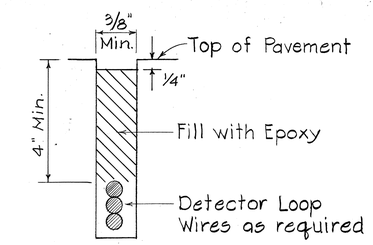

DETECTOR LOOP SAW-CUT

SECTION A-A (TYPICAL)

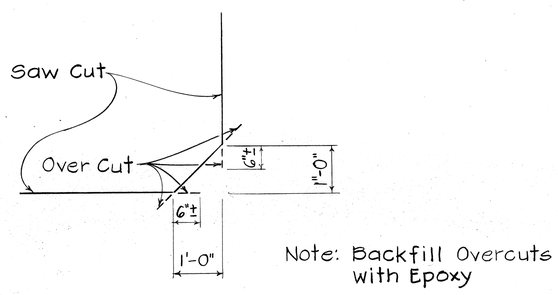

DETAIL OF SAW CUT AT CORNERS

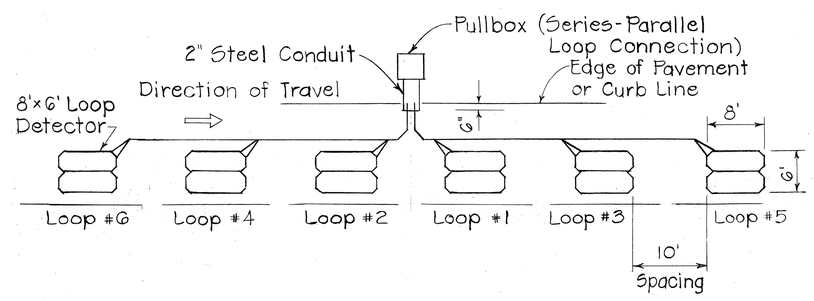

PLAN - LEFT TURN LANE LOOP LAYOUT

NOTE:

1. All conduits under roadways shall be steel or PVC schedule 80. All other conduits shall be steel or PVC schedule 40.

ORIGINAL PLAN	SURVEY PLOTTED BY	DATE
	DRAWN BY	"
	TRACED BY	"
NOTE BOOK	DESIGNED BY	"
	QUANTITIES BY	"
No.	CHECKED BY	"

STATE OF HAWAII
DEPARTMENT OF TRANSPORTATION
HIGHWAYS DIVISION

TYPICAL DETAILS
VEHICLE LOOP DETECTORS & MISCELLANEOUS DETAILS

Project No. 99D-01-79

Not to Scale — August 1978

SHEET No. 6 OF 19 SHEETS

FED. ROAD DIST. NO.	STATE	PROJ. NO.	FISCAL YEAR	SHEET NO.	TOTAL SHEETS
HAWAII	HAW.	99D-01-79	1980	7	19

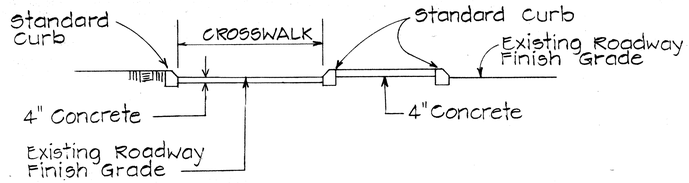

SECTION "A-A"

Use at Median Nose Crossings

Scale: 1" = 5'

For Additional Details, See Type "C" Wheel Chair Ramp

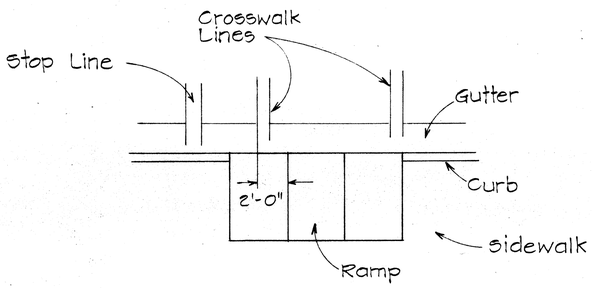

TYPICAL INSTALLATION AT CROSSWALKS

Scale: 1" = 5'

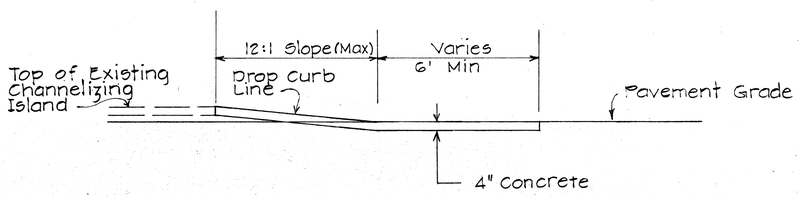

SECTION "B-B"

TYPE "B" MODIFIED WHEEL CHAIR RAMP

Use at Intersection of 2 Crosswalks On Channelizing Island

Scale: 3/8" = 1'

For Additional Details See Type "B" Wheelchair Ramp

NOTES

1. When necessitated by existing physical conditions, alternate Wheel Chair Ramps may be used subject to Engineer's approval.
2. Subject to field conditions, the Engineer shall determine final location of Wheel Chair Ramp.
3. Where necessary pullboxes, handholes manholes etc. shall be adjusted to match Wheel Chair Ramp grade. Adjustments shall be considered incidental to Wheel Chair Ramp construction, unless otherwise noted.

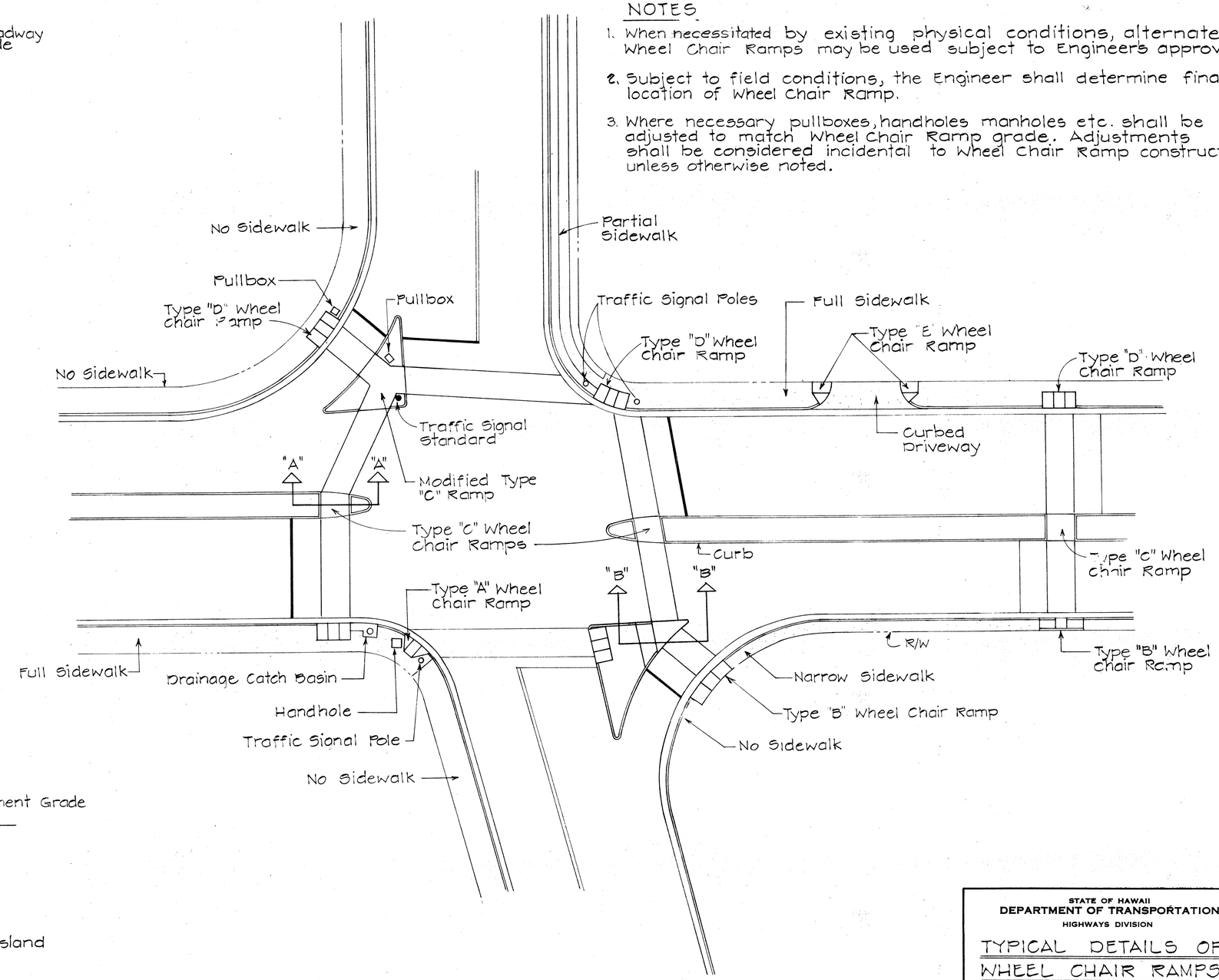

TYPICAL WHEEL CHAIR RAMPS

Scale: 1" = 20'

STATE OF HAWAII
DEPARTMENT OF TRANSPORTATION
HIGHWAYS DIVISION

TYPICAL DETAILS OF WHEEL CHAIR RAMPS

Scale: As Shown May, 1978

SHEET No. 7 OF 19 SHEETS

ORIGINAL PLAN | SURVEY PLOTTED BY | DRAWN BY | TRACED BY | DESIGNED BY | QUANTITIES BY | CHECKED BY | DATE | NOTE BOOK No.

FED. ROAD DIST. NO.	STATE	PROJ. NO.	FISCAL YEAR	SHEET NO.	TOTAL SHEETS
HAWAII	HAW.	99D-01-79	1980	8	19

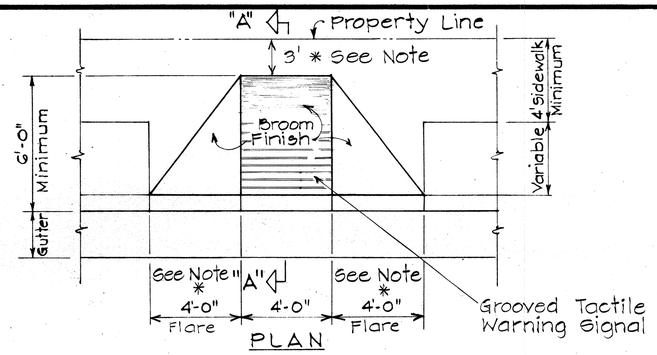

PLAN

ELEVATION

* Where dimension is less than 3', Flare width shall be 5'

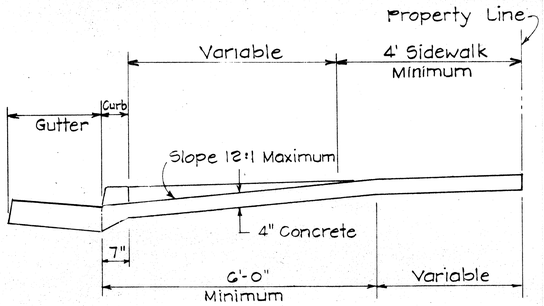

SECTION "A-A"

WHEELCHAIR RAMP - TYPE "A"

USE WHERE OBSTRUCTIONS EXIST

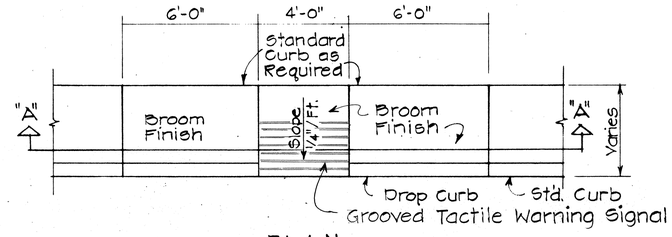

PLAN

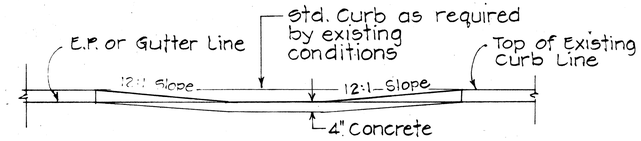

ELEVATION
SECTION "A-A"

WHEELCHAIR RAMP - TYPE "B"

USE AT SIDEWALKS WITH LESS THAN 6'-0" WIDTH

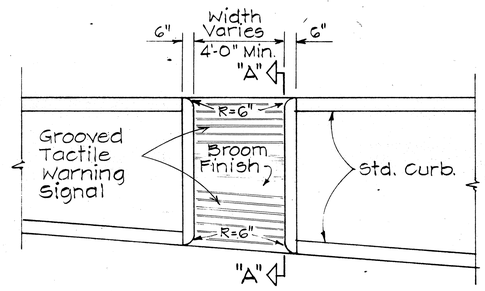

PLAN

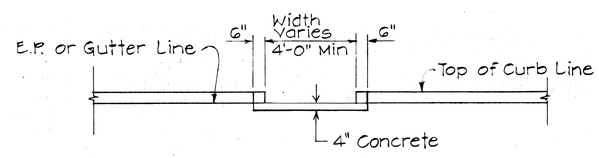

ELEVATION

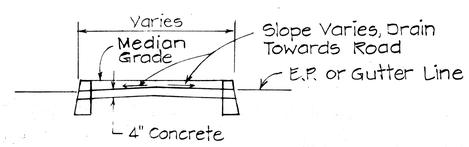

SECTION "A-A"

WHEELCHAIR RAMP - TYPE "C"

USE AT MEDIAN CROSSINGS, ISLANDS

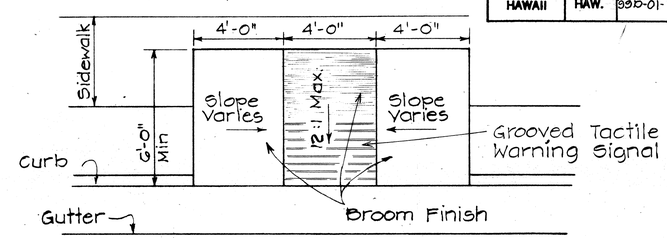

PLAN
Scale: 3/8" = 1'-0"

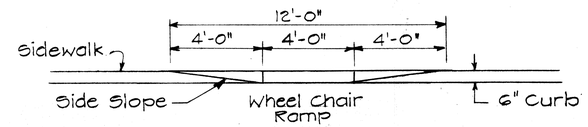

ELEVATION
Scale: 3/8" = 1'-0"

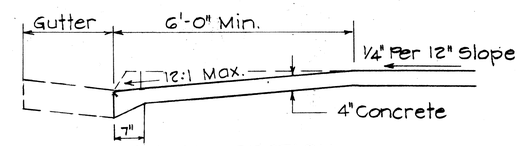

TYPICAL SECTION
Scale: 3/4" = 1'-0"

WHEELCHAIR RAMP - TYPE "D"

USE WHEN IDEAL CONDITIONS EXIST

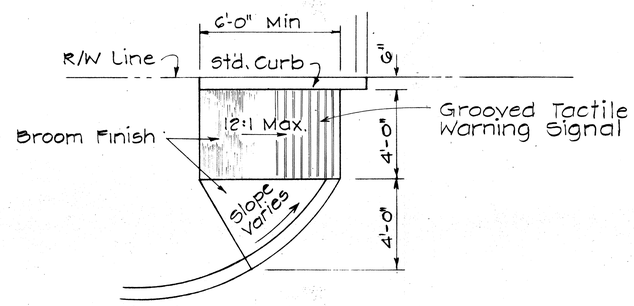

WHEELCHAIR RAMP - TYPE "E"

USE AT CURBED DRIVEWAYS
Scale: 3/8" = 1'-0"

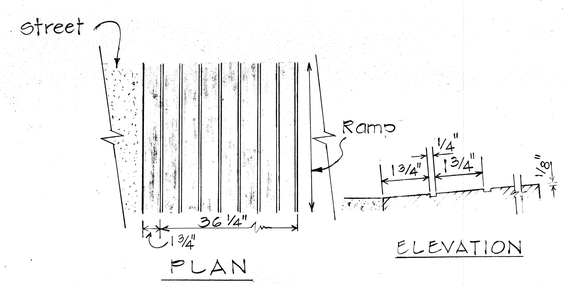

PLAN
ELEVATION

GROOVED TACTILE WARNING SIGNAL

ORIGINAL PLAN	SURVEY PLOTTED BY	DATE
	DRAWN BY	
	TRACED BY	
NOTE BOOK	DESIGNED BY	
	QUANTITIES BY	
No.	CHECKED BY	

STATE OF HAWAII
DEPARTMENT OF TRANSPORTATION
HIGHWAYS DIVISION

TYPICAL DETAILS OF WHEEL CHAIR RAMPS

Scale: As Shown May, 1978

SHEET No. 8 OF 19 SHEETS

8

FED. ROAD DIST. NO.	STATE	PROJ. NO.	FISCAL YEAR	SHEET NO.	TOTAL SHEETS
HAWAII	HAW.	99D-01-79	1980	9	19

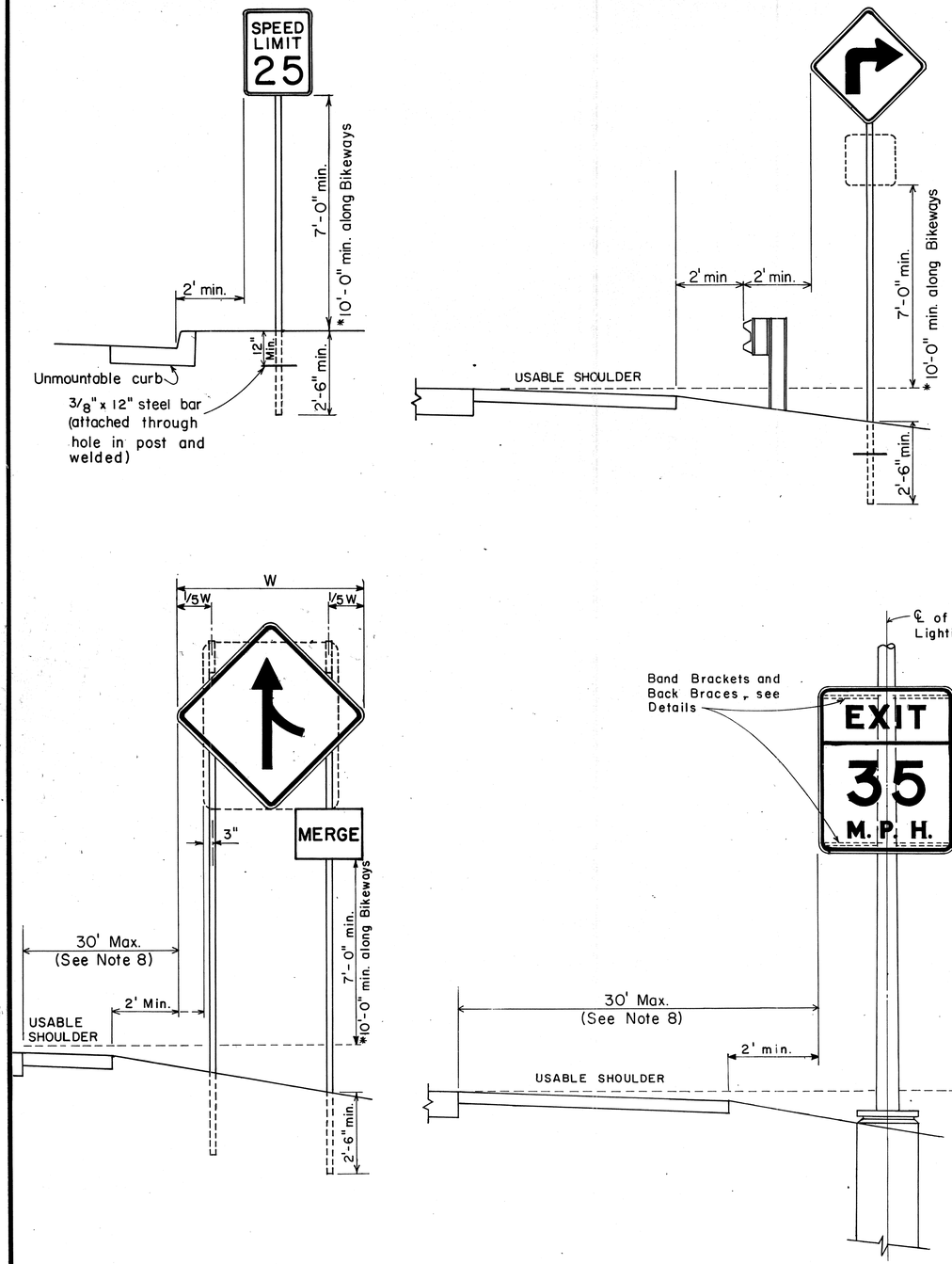

HEIGHT AND LATERAL LOCATION OF SIGNS TYPICAL INSTALLATION

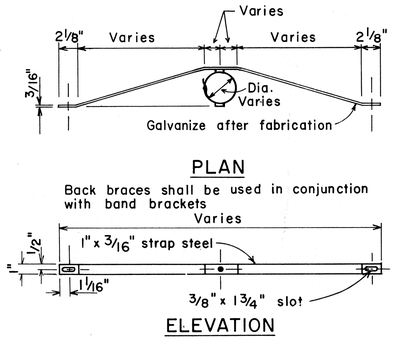

BACK BRACE DETAILS FOR BALANCED SIGN INSTALLATION

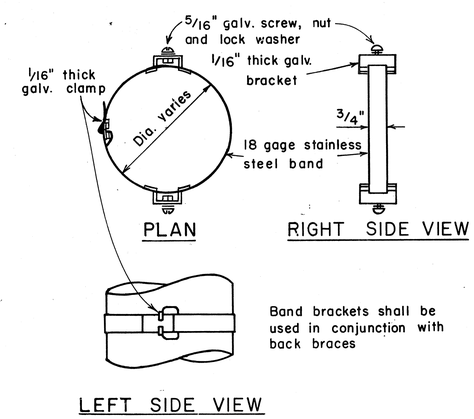

TYPICAL BAND BRACKET FOR MOUNTING TRAFFIC SIGNS

GENERAL NOTES

1. Signs 48" and wider or larger than 10 sq. ft. in area shall be mounted on two sign posts.
2. All signs larger than 10 sq. ft. in area or 48" inches and wider, and mounted on other than two posts supports (i.e., on highway lighting poles) shall have at least two sets of band brackets and back braces.
3. All signs 28 sq. ft. in area or larger and mounted on other than two posts supports (i.e., on highway lighting poles) shall have at least three sets of band brackets and back braces.
4. Signs shall be attached to post with 5/16" galv. bolts with nuts and 7/8" x 0.06" stainless steel washers with neoprene rubber gasket.
5. Sign posts shall extend 3 1/2" above sign where required for City and County street name signs.
6. (R) or (L) indicates right or left and shall be as shown on the plans.

*7. See plans for special details.

8. When clear roadside recovery areas are provided, Signs shall be placed as far from the edge of traveled way as possible up to a maximum of 30 feet. When possible they shall be placed in protected locations.
9. Signs in medians shall be placed at midpoint of median up to a maximum distance of 30 feet from the edge of traveled way. When appropiate, signs for opposing directions shall be placed back to back.

NO.	REVISION	APPROVED BY	DATE
1	Supercedes Sht. DT-100 approved 12/30/69	H.F.	11/15/77
2	Revised depth of signpost	H.F.	5/23/79
3	Added Notes No. 8 & No. 9	H.F.	5/18/79

APPROVAL RECOMMENDED:
Eichi Tanaka — 11/10/77
TRAFFIC ENGINEER — DATE

APPROVED:
Herbert Q. Takeichi — 11/15/77
ASSISTANT CHIEF, ENGINEERING — DATE

STATE OF HAWAII
DEPARTMENT OF TRANSPORTATION
HIGHWAYS DIVISION

STANDARD DETAILS

MISCELLANEOUS SIGN DETAILS

Not to scale — June, 1977

SHEET No. 9 OF 19 SHEETS DT 100

ORIGINAL PLAN	SURVEY PLOTTED BY	DRAWN BY	TRACED BY	DESIGNED BY	QUANTITIES BY	CHECKED BY	DATE
NOTE BOOK							
No.							

D-5-1

FED. ROAD DIST. NO.	STATE	PROJ. NO.	FISCAL YEAR	SHEET NO.	TOTAL SHEETS
HAWAII	HAW.	99D-01-79	1980	10	19

STOP
R1-1 30"x30"
R1-1-A 36"x36"

YIELD
R1-2 36"x36"x36"
R1-2-A 48"x48"x48"

4-WAY
R1-3 12"x6"
R1-3-A 18"x9"

SPEED LIMIT 50
R2-1(50) 24"x30"
R2-1(50)-A 48"x60"

TRUCKS 40
R2-2(40) 24"x24"
R2-2(40)-A 48"x48"

SPEED LIMIT 50 MINIMUM 40
R2-4a(50/40) 24"x48"
R2-4a(50/40)-A 48"x96"

REDUCED SPEED 30 M.P.H.
R2-5b(30) 24"x30"
R2-5b(30)-A 48"x60"

NO RIGHT TURN
R3-1 24"x24"
24"x18"
R3-1-A 48"x48"
48"x36"

NO LEFT TURN
R3-2 24"x24"
24"x18"
R3-2-A 48"x48"
48"x36"

NO TURNS
R3-3 24"x24"
R3-3-A 48"x48"

NO U TURN
R3-4 24"x24"
24"x18"
R3-4-A 48"x48"
48"x36"

ONLY
R3-5(L) 30"x36"
R3-5(L)-A 48"x60"

R3-6(L) 30"x36"
R3-6(L)-A 48"x60"

RIGHT LANE MUST TURN RIGHT
R3-7(R) 30"x30"
R3-7(R)-A 48"x48"

ONLY
R3-8(L) 30"x30"
R3-8(L)-A 36"x36"
R3-8(L)-B 48"x48"

CENTER LANE
LEFT TURN ONLY
R3-9 24"x30"

DO NOT PASS
R4-1 24"x30"

PASS WITH CARE
R4-2 24"x30"

SLOWER TRAFFIC KEEP RIGHT
R4-3 24"x30"
R4-3-A 48"x60"

TRUCKS USE RIGHT LANE
R4-5 24"x30"

TRUCK LANE 500 FEET
R4-6(500) 24"x30"

KEEP RIGHT
R4-7 24"x30"
24"x18"

KEEP LEFT
R4-8 24"x30"
24"x18"

DO NOT
ENTER
R5-1 30"x30"
R5-1-A 48"x48"

NO TRUCKS
R5-2 24"x24"
24"x18"

COMMERCIAL VEHICLES EXCLUDED
R5-4 24"x30"

NO BICYCLES
R5-6 24"x24"
24"x18"

WRONG WAY
R5-9 36"x24"

ONE WAY
R6-1(R) 36"x12"

ONE WAY
R6-2(R) 18"x24"

NO PARKING ANY TIME
R7-1 12"x18"
R7-1-A 24"x30"

NO STOPPING OR STANDING
R7-4 12"x18"
R7-4-A 24"x30"

NO PARKING
BUS STOP
R7-107(R) 12"x18"

2 HR PARKING
8:30 AM TO 5:30 PM
R7-108 12"x18"

TOW-AWAY ZONE
R7-201 12"x6"
R7-201-A 24"x12"

NO PARKING ON PAVEMENT
R8-1 24"x30"

NO PARKING EXCEPT ON SHOULDER
R8-2 24"x30"

NO PARKING
R8-3 24"x30"

EMERGENCY PARKING ONLY
R8-4 30"x24"
R8-4-A 48"x36"

NO STOPPING ON PAVEMENT
R8-5 24"x30"

NO STOPPING EXCEPT ON SHOULDER
R8-6 24"x30"

EMERGENCY STOPPING ONLY
R8-7 30"x24"
R8 7-A 48"x36"

WALK ON LEFT FACING TRAFFIC
R9-1 18"x24"

CROSS ONLY AT CROSS WALKS
R9-2 12"x18"

NO PEDESTRIAN CROSSING
R9-3 12"x18"

NO HITCH HIKING
R9-4 18"x24"

CROSS ON GREEN LIGHT ONLY
R10-1 12"x18"

CROSS ON WALK SIGNAL ONLY
R10-2 12"x18"

PUSH BUTTON FOR GREEN LIGHT
R10-3 9"x12"

PUSH BUTTON FOR WALK SIGNAL
R10-4 9"x12"

LEFT ON ARROW ONLY
R10-5 24"x30"

STOP HERE ON RED
R10-6 24"x36"

DO NOT BLOCK INTERSECTION
R10-7 24"x30"

USE LANE WITH GREEN ARROW
R10-8 24"x30"

RIGHT TURN ON RED AFTER STOP
R10-9 24"x30"

LEFT TURN SIGNAL
R10-10 24"x30"

KEEP OFF MEDIAN
R11-1 24"x30"

ROAD CLOSED
R11-2 48"x30"

ROAD CLOSED
10 MILES AHEAD
LOCAL TRAFFIC ONLY
R11-3(10) 60"x30"

ROAD CLOSED TO THRU TRAFFIC
R11-4 60"x30"

WEIGHT LIMIT 10 TONS
R12-1(10) 24"x30"

GENERAL NOTES

1. Sign details shall conform to the FHWA publications "Manual on Uniform Traffic Control Devices for Streets and Highways," 1971, and "Standard Highway Signs," 1972, and as amended.
2. All regulatory signs shall be reflectorized unless otherwise specified.
3. All regulatory signs shall have 3/8" bolt holes drilled at appropriate locations.
4. Numerals in ( ) indicates numerals to be inserted for sign message. (R) or (L) indicates right or left.
5. All signs shall be erected without educational plaques unless called for in the plans.

APPROVAL RECOMMENDED:
Eiichi Tanaka 3/17/72
TRAFFIC ENGINEER DATE

APPROVED:
Robert 3-20-72
ASSISTANT CHIEF, ENGINEERING DATE

NO.	REVISION	APPROVED BY	DATE
1	Supersedes Sht. DT 101 Approved 12-30-69	H.I.	3/20/72
2	Revised General Note 1.	H.I.	10/10/74
3	Added General Note 5	H.I.	11/7/77

STATE OF HAWAII
DEPARTMENT OF TRANSPORTATION
HIGHWAYS DIVISION

STANDARD DETAILS

REGULATORY SIGNS

NOT TO SCALE

SHEET No. 10 OF 19 SHEETS DT 101

ORIGINAL PLAN | SURVEY PLOTTED BY | DRAWN BY | TRACED BY | DESIGNED BY | QUANTITIES BY | CHECKED BY | DATE | NOTE BOOK No.

K+E IMPERIAL TRACING CLOTH LA 3267

10

FED. ROAD DIST. NO.	STATE	PROJ. NO.	FISCAL YEAR	SHEET NO.	TOTAL SHEETS
HAWAII	HAW.	99B-01-79	1980	11	19

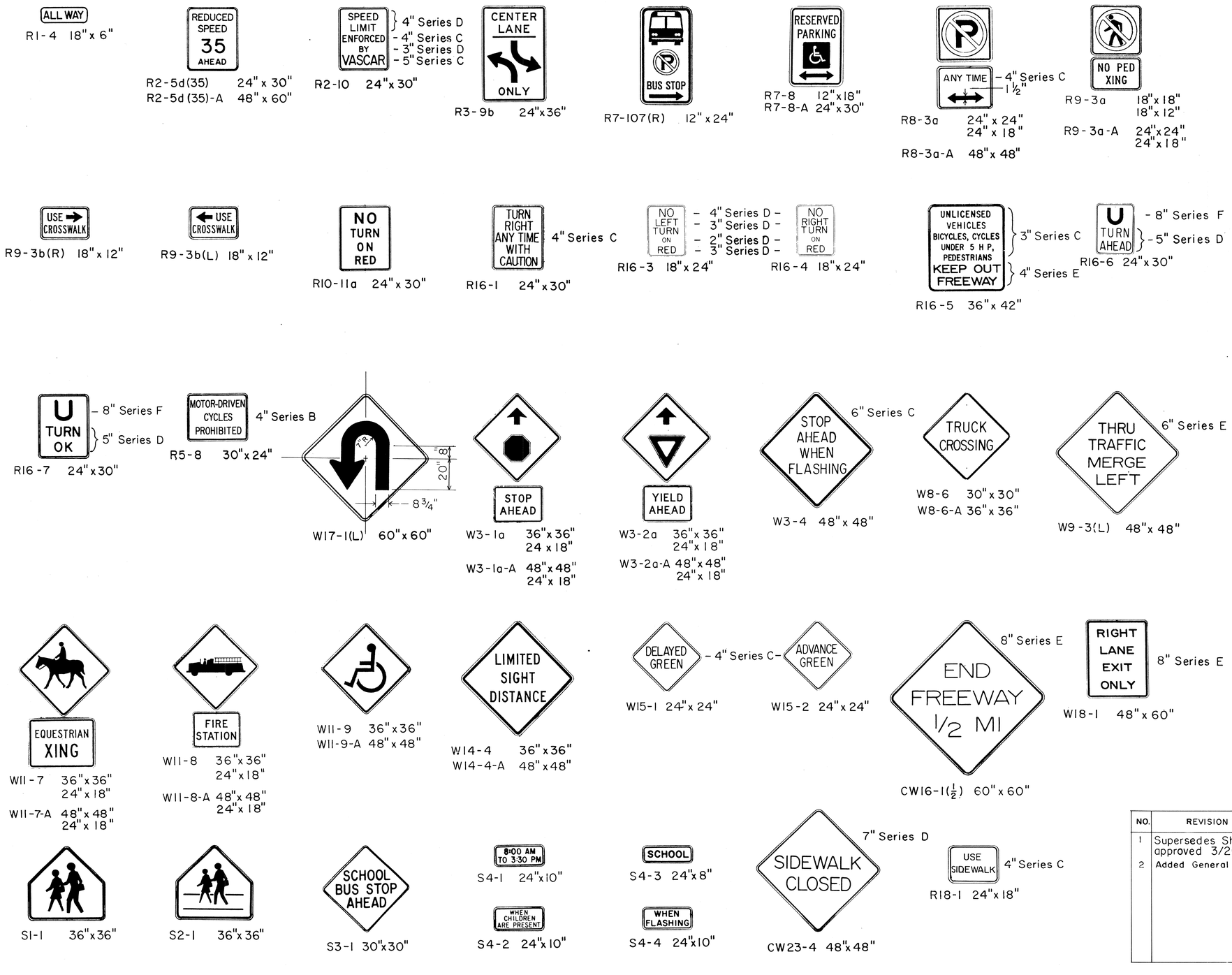

General Notes

1. Sign details shall conform to the latest editions of the following FHWA publications:
   a. "Standard Alphabets for Highway Signs," and as amended.
   b. "Standard Highway Signs," and as amended,
   c. "Manual on Uniform Traffic Control Devices for Streets and Highways," and as amended,
2. All signs shall be reflectorized with reflective sheeting, unless otherwise specified.
3. All signs shall have 3/8" bolt holes drilled at appropriate locations.
4. Numerals in ( ) indicate numerals to be inserted for sign message. (R) or (L) indicates right or left.
5. Signs prefixed with "CW" on the plans shall indicate orange and black construction signs, and shall be reflectorized with reflective sheeting.
6. All signs shall be erected without educational plaques unless called for in the plans.

APPROVAL RECOMMENDED:
Euichi Tanaka — TRAFFIC ENGINEER — 5/2/78 DATE

APPROVED:
Herbert Z. Tatsuguchi — ASSISTANT CHIEF, ENGINEERING — 5/3/78 DATE

NO.	REVISION	APPROVED BY	DATE
1	Supersedes Sht. DT103 approved 3/20/72	H.T.	5/3/78
2	Added General Note 6	H.T.	11/9/79

STATE OF HAWAII
DEPARTMENT OF TRANSPORTATION
HIGHWAYS DIVISION

STANDARD DETAILS

MISCELLANEOUS SIGNS

NOT TO SCALE — DATE: MAY, 1978

SHEET No. 11 OF 19 SHEETS DT 103

ORIGINAL PLAN — SURVEY PLOTTED BY — DRAWN BY — TRACED BY — DESIGNED BY — QUANTITIES BY — CHECKED BY — DATE — NOTE BOOK No.

1-5-0

FED. ROAD DIST. NO.	STATE	PROJ. NO.	FISCAL YEAR	SHEET NO.	TOTAL SHEETS
HAWAII	HAW.	900-01-78	1980	12	19

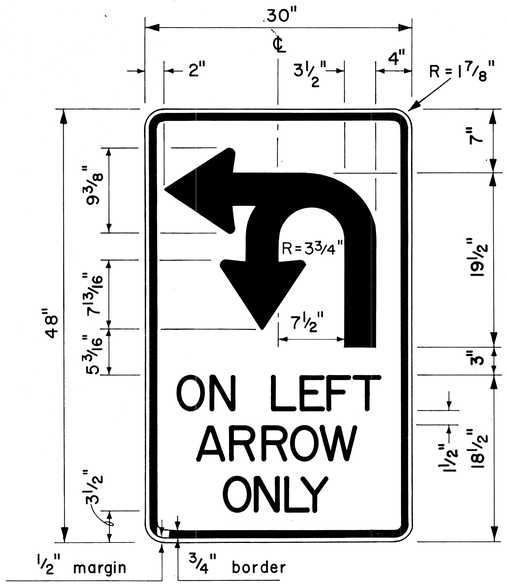

4" Series D Letters

R17-1

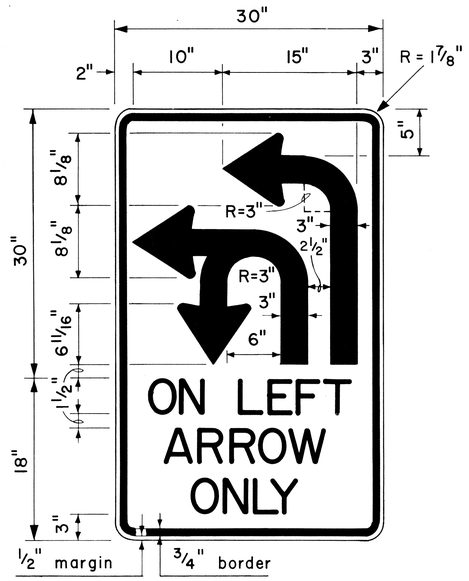

4" Series D Letters

R17-2

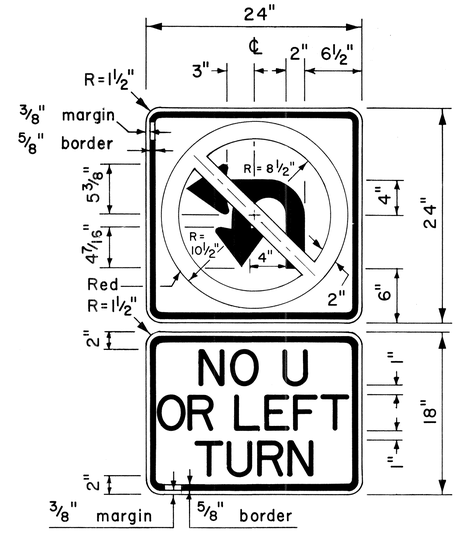

4" Series D Letters

R3-4b

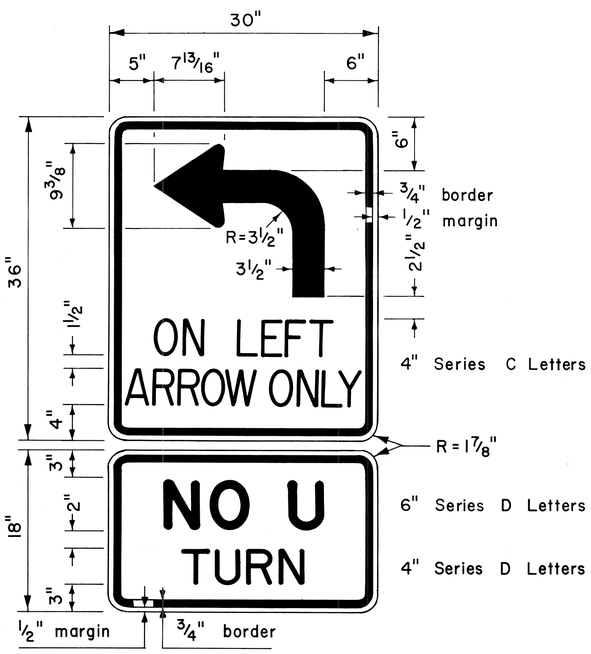

R17-3

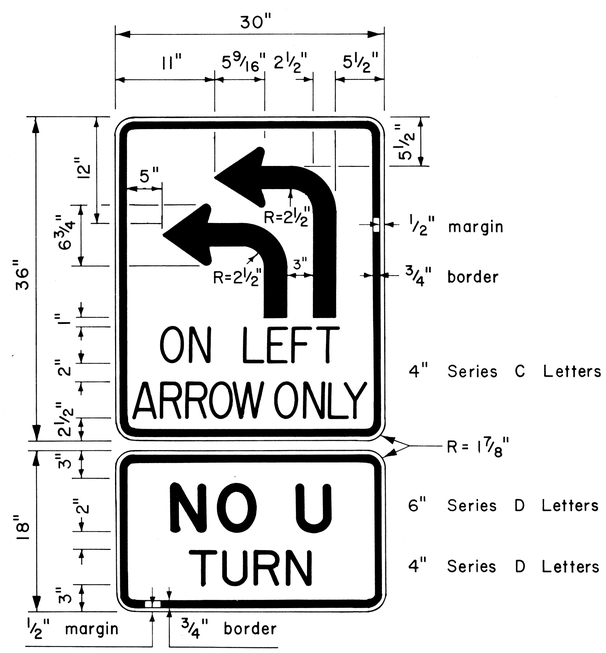

R17-4

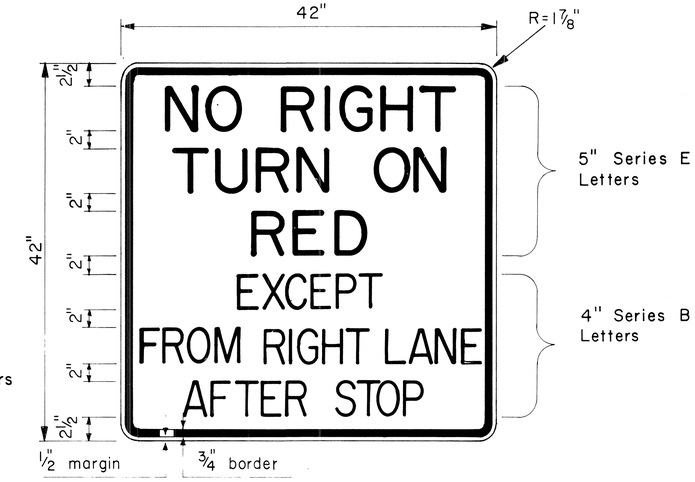

R10-11d

GENERAL NOTES

1. Sign details shall conform to the latest editions of the following FHWA publications: "Manual on Uniform Traffic Control Devices for Streets and Highways," and "Standard Highway Signs," and as amended.
2. All regulatory signs shall be reflectorized unless otherwise specified.
3. All regulatory signs shall have ⅜" bolt holes drilled at appropriate locations.

APPROVAL RECOMMENDED:

Eiichi Tanaka — TRAFFIC ENGINEER — 8/1/77 DATE

APPROVED:

Herbert Takeishi — ASSISTANT CHIEF, ENGINEERING — 8/10/77 DATE

NO.	REVISION	APPROVED BY	DATE

STATE OF HAWAII
DEPARTMENT OF TRANSPORTATION
HIGHWAYS DIVISION

STANDARD DETAILS

MISCELLANEOUS INTERSECTION SIGNS

Scale: 1½" = 1'-0" Date: Aug., 1977

SHEET NO. 12 OF 19 SHEETS DT 112

ORIGINAL PLAN	SURVEY PLOTTED BY	DATE
	DRAWN BY	"
	TRACED BY	"
NOTE BOOK	DESIGNED BY	"
	QUANTITIES BY	"
No.	CHECKED BY	"

FED. ROAD DIST. NO.	STATE	PROJ. NO.	FISCAL YEAR	SHEET NO.	TOTAL SHEETS
HAWAII	HAW.	99D-01-79	1980	13	19

TWO - LANE

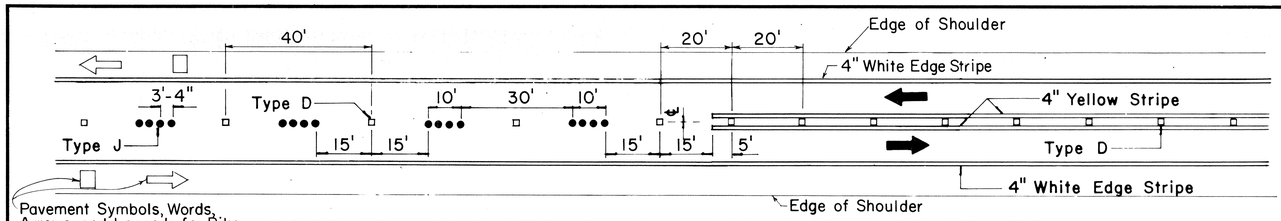

PASSING PERMITTED AND PASSING PROHIBITED

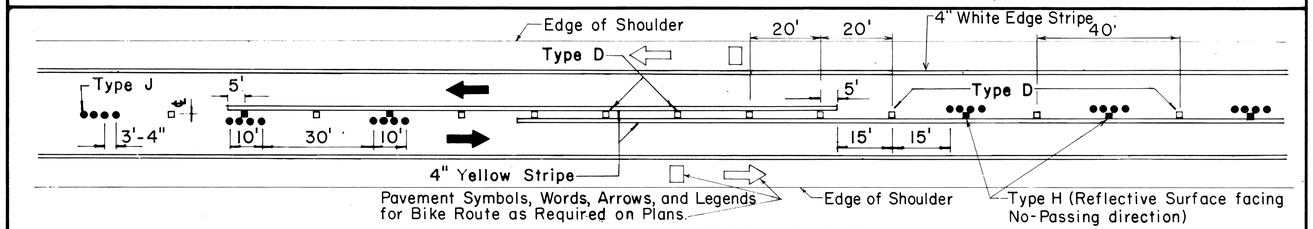

PASSING PROHIBITED ZONES

MULTI - LANE

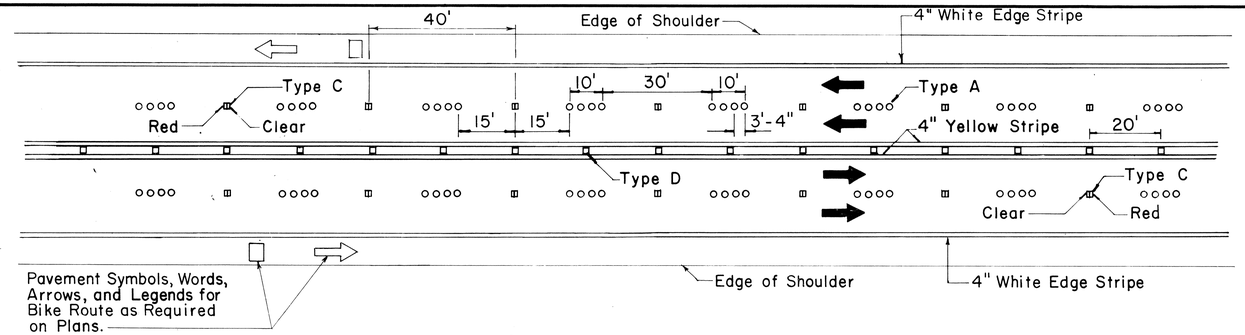

DIVIDED HIGHWAY AND FREEWAY

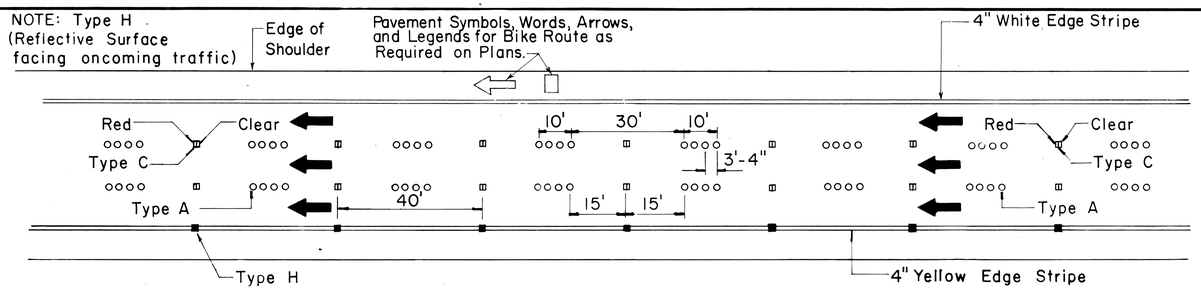

MISCELLANEOUS

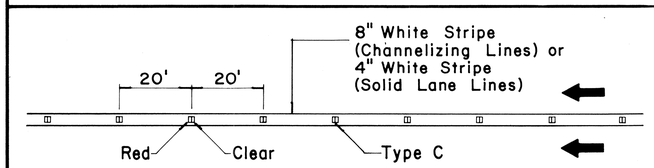

CHANNELIZING LINES OR SOLID LANE LINES

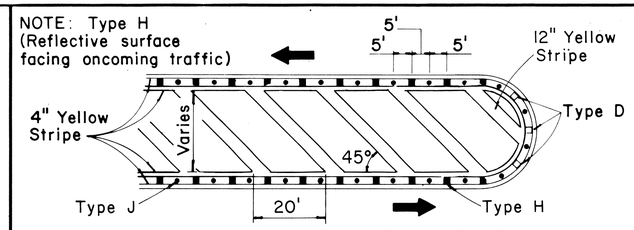

MEDIAN NOSE DELINEATION

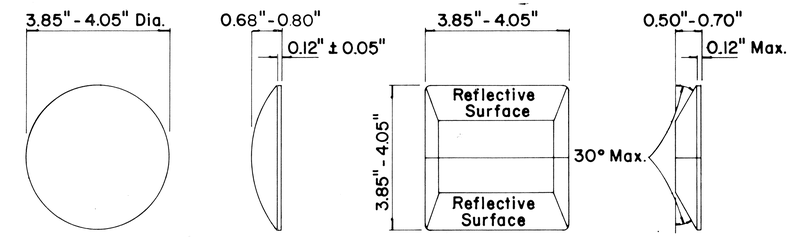

TYPE A
NON - REFLECTIVE WHITE MARKER

TYPE C
RED - CLEAR REFLECTIVE MARKER

TYPE J
NON - REFLECTIVE YELLOW MARKER

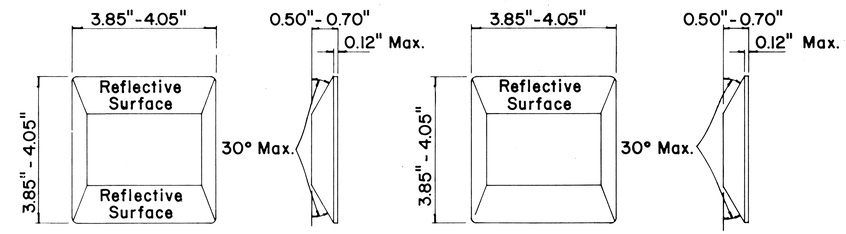

TYPE D
TWO - WAY YELLOW REFLECTIVE MARKER

TYPE H
ONE - WAY YELLOW REFLECTIVE MARKER

GENERAL NOTES

1. Pavement marking and striping shall conform to the latest "Manual on Uniform Traffic Control Devices for Streets and Highways," and as amended.

2. Layout and installation of pavement marking and striping shall be done by the Contractor. The Contractor shall check the layouts with the Engineer prior to performing work.

LEGEND

- ○ Type A
- ◫ Type C
- □ Type D
- ■ Type H
- ● Type J

APPROVAL RECOMMENDED:

Ericki Tanaka — TRAFFIC ENGINEER — 7/21/78 DATE

APPROVED:

Herbert Y. Takeishi — ASSISTANT CHIEF, ENGINEERING — 7/24/78 DATE

No.	REVISION	APPROVED BY	DATE
1	Supercedes DT 300 approved 11/18/71.	H.T.	7/24/78
2	Delete Type A Markers from Bike Route Delineation.	H.T.	11/15/81

STATE OF HAWAII
DEPARTMENT OF TRANSPORTATION
HIGHWAYS DIVISION

STANDARD DETAILS
RAISED PAVEMENT MARKERS AND STRIPING

Not to Scale — July 1978

SHEET No. 13 OF 19 SHEETS DT 300

ORIGINAL PLAN	SURVEY PLOTTED BY	DATE
	DESIGNED BY	
	TRACED BY	
NOTE BOOK	DESIGNED BY	
	QUANTITIES BY	
No.	CHECKED BY	

K+E IMPERIAL LA 1207

FED. ROAD DIST. NO.	STATE	PROJ. NO.	FISCAL YEAR	SHEET NO.	TOTAL SHEETS
HAWAII	HAW.	99D-01-79	1980	14	19

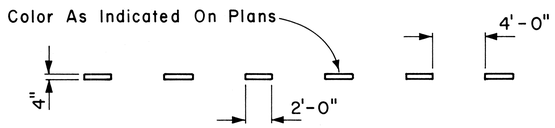

4" GUIDE LINE

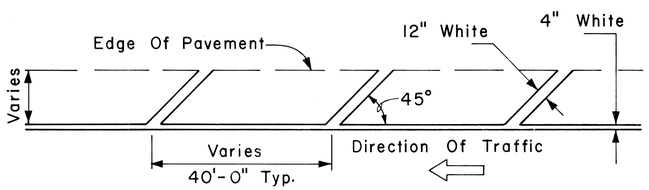

TRANSVERSE RIGHT SHOULDER MARKING

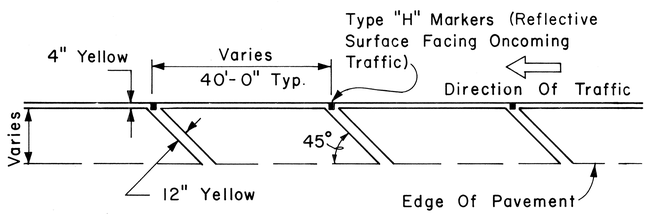

TRANSVERSE LEFT SHOULDER MARKING

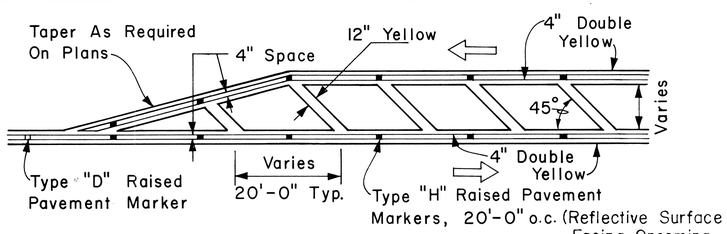

TRANSVERSE MEDIAN MARKING

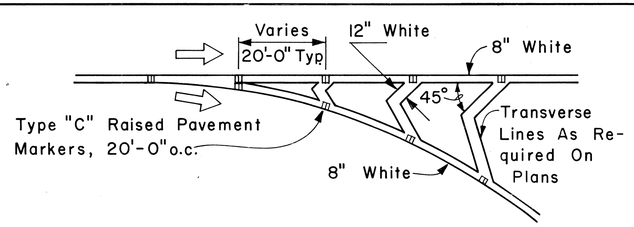

CHANNELIZING ISLAND

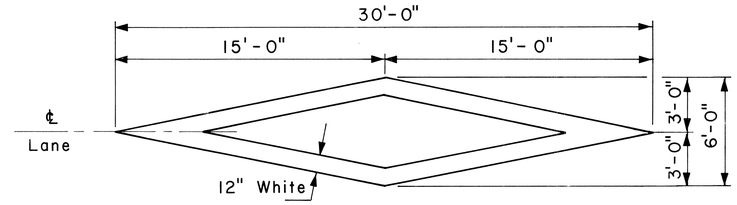

PAVEMENT DIAMOND

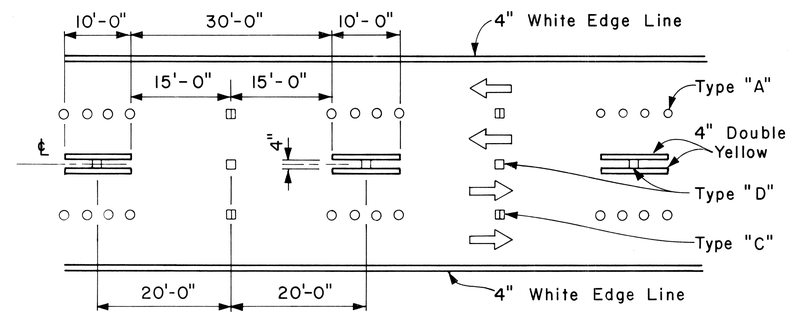

NOTE: Traffic Cone Usage Required.

MULTI-LANE REVERSIBLE LANES

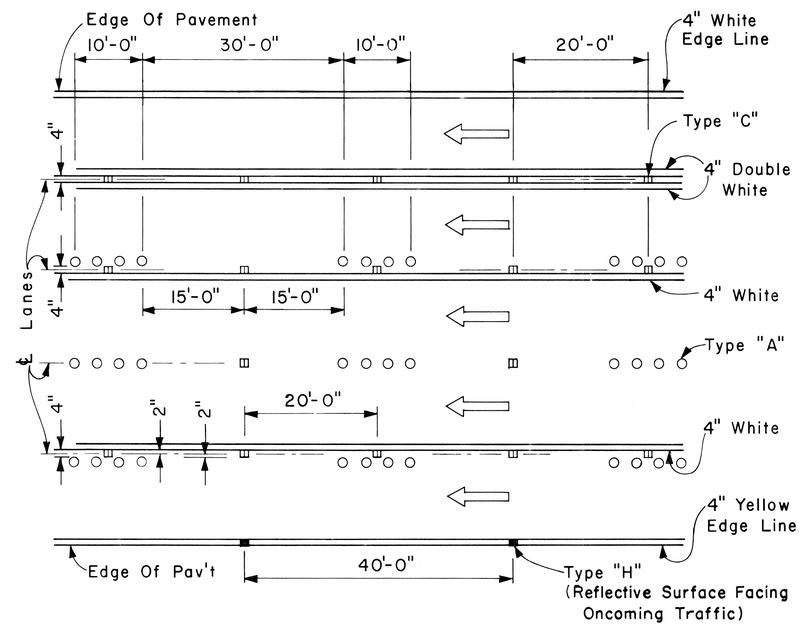

MULTI-LANE LANE CHANGE RESTRICTION ZONES

GENERAL NOTES:

1. Pavement marking and striping shall conform to the latest edition of the "Manual on Uniform Traffic Control Devices for Streets and Highways," by the FHWA, and as amended.
2. Layout of pavement markings and striping shall be done by the Contractor. The Contractor shall check layout of markings and striping with the Engineer prior to performing work.
3. For additional pavement marking details, see sheet DT 300.

APPROVAL RECOMMENDED: Eiichi Tanaka — TRAFFIC ENGINEER — DATE 5/2/78

APPROVED: Herbert Y. Takiishi — ASSISTANT CHIEF, ENGINEERING — DATE 5/3/78

NO.	REVISION	APPROVED BY	DATE

STATE OF HAWAII
DEPARTMENT OF TRANSPORTATION
HIGHWAYS DIVISION

STANDARD DETAILS

MISCELLANEOUS PAVEMENT MARKINGS

Scale: Not to Scale Date: April, 1978

SHEET No. 14 OF 19 SHEETS DT 302

ORIGINAL PLAN — SURVEY PLOTTED BY — DRAWN BY — TRACED BY — DESIGNED BY — QUANTITIES BY — CHECKED BY — DATE — NOTE BOOK — No.

FED. ROAD DIST. NO.	STATE	PROJ. NO.	FISCAL YEAR	SHEET NO.	TOTAL SHEETS
HAWAII	HAW.	900D-01-79	1980	15	19

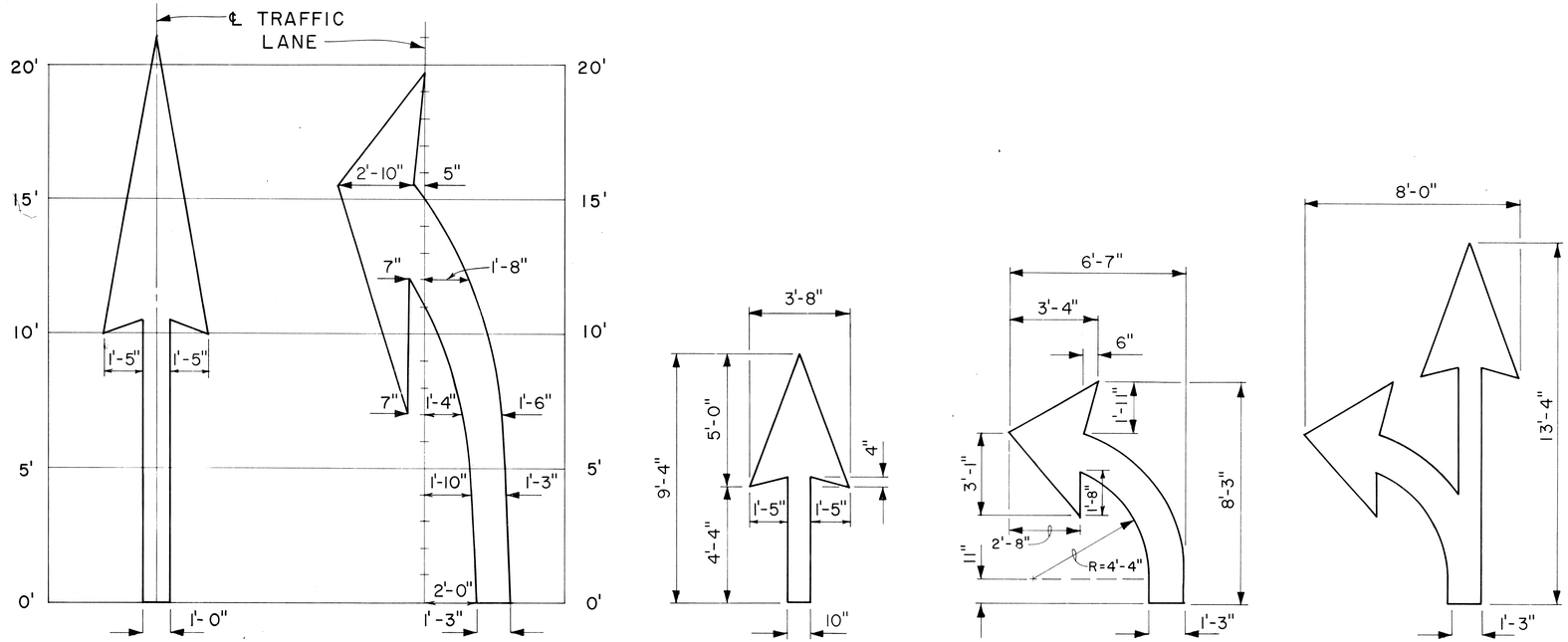

PAVEMENT ARROWS

Scale: 3/8" = 1'

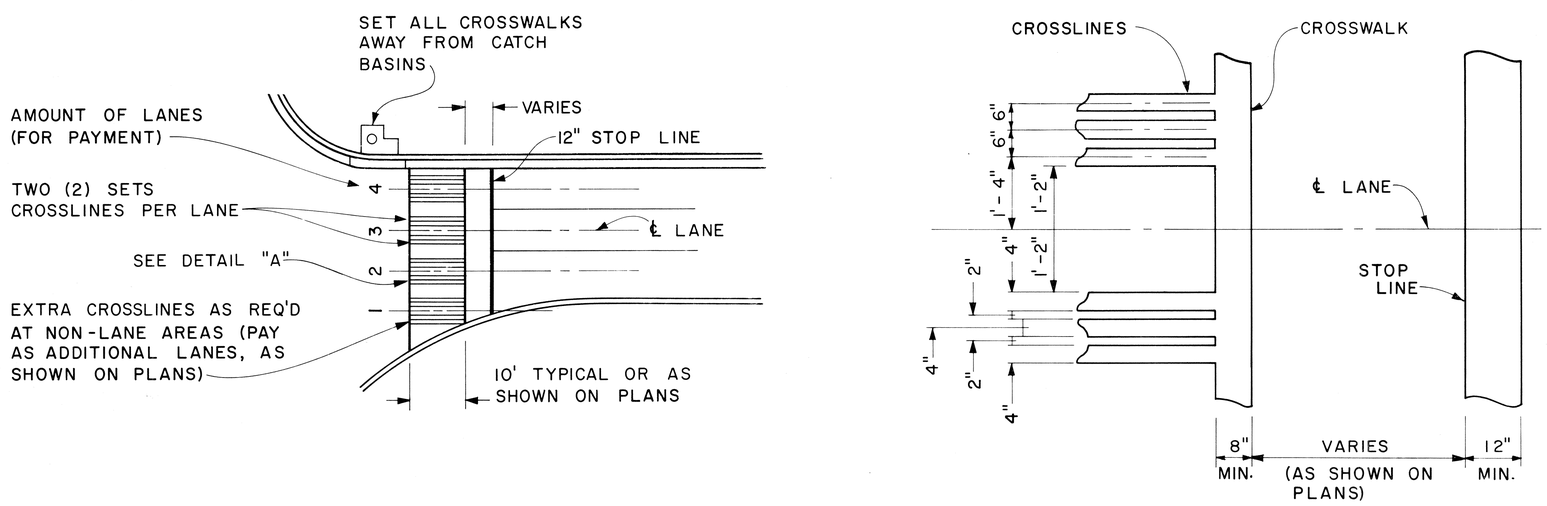

CROSSWALK & STOP LINE

Scale: Not to Scale

GENERAL NOTES:

1. Pavement marking and striping shall conform to the latest edition of the "Manual on Uniform Traffic Control Devices for Streets and Highways," by the FHWA, and as amended.
2. Layout of pavement markings and striping shall be done by the Contractor. The Contractor shall check layout of markings and striping with the Engineer prior to performing work.
3. For additional pavement marking details, see sheet DT 300.

APPROVAL RECOMMENDED: Eiichi Tanaka — TRAFFIC ENGINEER — DATE 5/2/78

APPROVED: Herbert Z. Takiishi — ASSISTANT CHIEF, ENGINEERING — DATE 5/3/78

NO.	REVISION	APPROVED BY	DATE

STATE OF HAWAII
DEPARTMENT OF TRANSPORTATION
HIGHWAYS DIVISION

STANDARD DETAILS

MISCELLANEOUS PAVEMENT MARKINGS

Scale: As Shown Date: March, 1978

SHEET No. 15 OF 19 SHEETS DT 306

ORIGINAL PLAN — NOTE BOOK No. — SURVEY PLOTTED BY — DRAWN BY — TRACED BY — DESIGNED BY — QUANTITIES BY — CHECKED BY — DATE

FED. ROAD DIST. NO.	STATE	PROJ. NO.	FISCAL YEAR	SHEET NO.	TOTAL SHEETS
HAWAII	HAW.	99D-01-79	1980	16	19

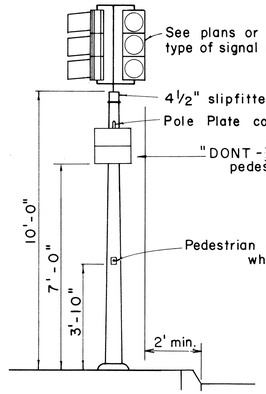

ON 10-FOOT STANDARD

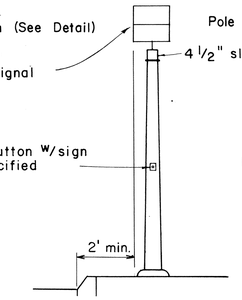

ON 8-FOOT STANDARD WHEN SPECIFIED

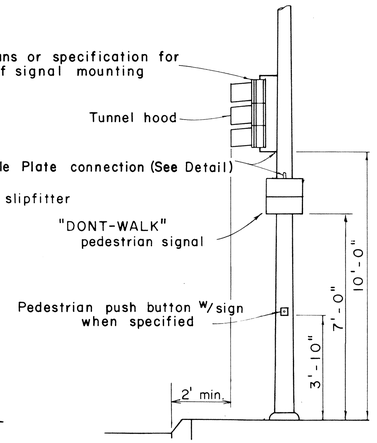

ON MAST ARM OR SPAN WIRE STANDARD

TYPICAL EQUIPMENT MOUNTINGS

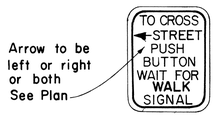

R10-4a(L)
5" x 7"

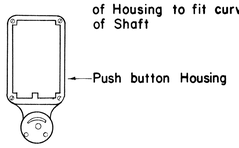

PEDESTRIAN PUSH BUTTON

NOTE:
1. Conduits shall protrude 2" max. above finished surface of foundation.
2. Conduits shall slope away from pole foundation.

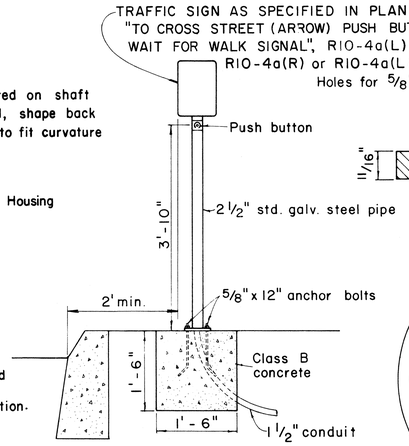

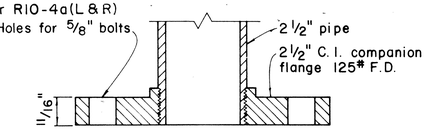

SECTION

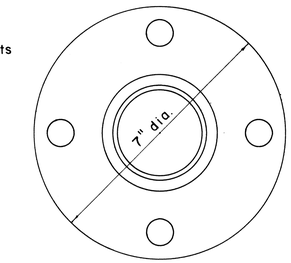

BASE DETAIL

PEDESTRIAN PUSH BUTTON POST AND FOOTING

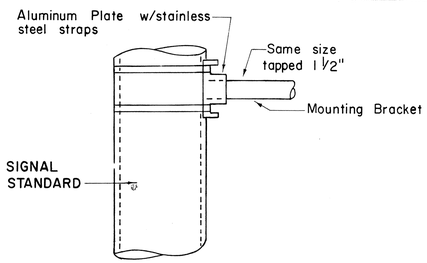

DETAIL OF POLE PLATE CONNECTIONS

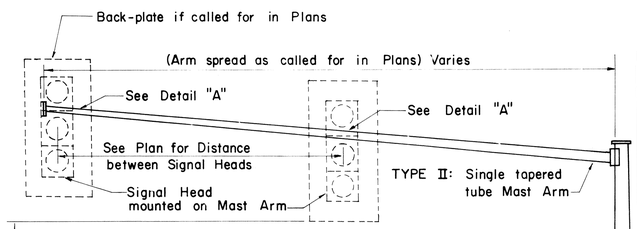

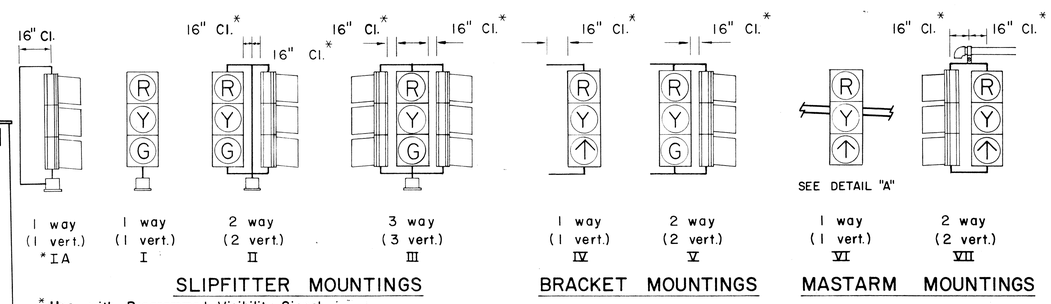

SLIPFITTER MOUNTINGS — BRACKET MOUNTINGS — MASTARM MOUNTINGS

* Use with Programmed Visibility Signal

TYPICAL VEHICULAR AND PEDESTRIAN SIGNAL MOUNTINGS

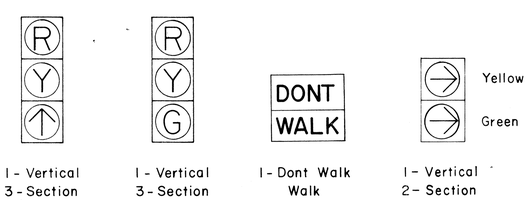

TYPICAL SIGNAL ARRANGEMENTS

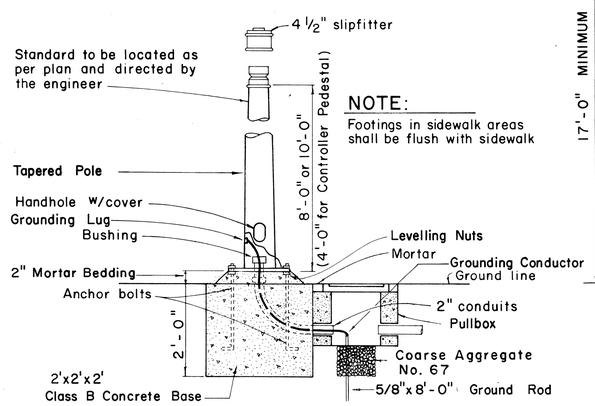

NOTE:
Footings in sidewalk areas shall be flush with sidewalk

TYPE I SIGNAL STANDARD OR CONTROLLER PEDESTAL AND FOOTING

DETAIL "A"

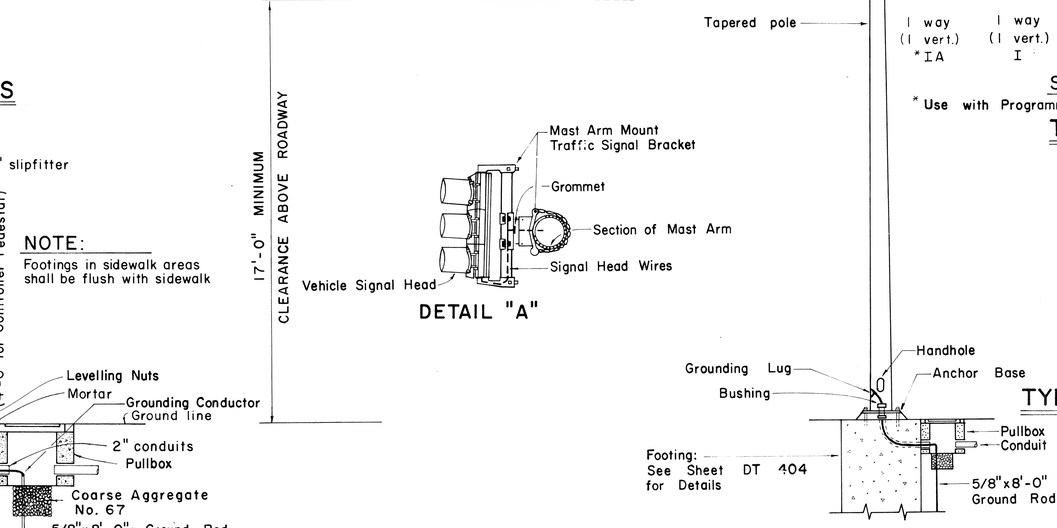

TYPE II MAST ARM AND STANDARD

APPROVAL RECOMMENDED:

Eichi Tanaka — TRAFFIC ENGINEER — 12/29/69 DATE

ASSISTANT CHIEF, ENGINEERING — 12/30/69 DATE

NO.	REVISION	APPROVED BY	DATE
1	Revise code nos. for Pedestrian Push Button signs.	H.T.	3/23/72
2	Revise Details of Traffic and Pedestrian Signals, Standards and Pedestrian Push Button and Signs.	H.T.	3/5/76
3	Revise signal indications.	H.T.	9/22/76
4	Remove Note No. 3 & Revise clearance and dimension.	H.T.	9/19/77

STATE OF HAWAII
DEPARTMENT OF TRANSPORTATION
HIGHWAYS DIVISION

TRAFFIC SIGNAL SYSTEM

MISCELLANEOUS DETAILS

Not to Scale

SHEET No. 16 OF 19 SHEETS DT 400

DATE — QUANTITY PLOTTED BY — DRAWN BY — TRACED BY — DESIGNED BY — QUANTITIES BY — CHECKED BY — NOTE BOOK No.

PRINTED ON NO. 1000H CLEARPRINT

FED. ROAD DIST. NO.	STATE	PROJ. NO.	FISCAL YEAR	SHEET NO.	TOTAL SHEETS
HAWAII	HAW.	990-01-79	1980	17	19

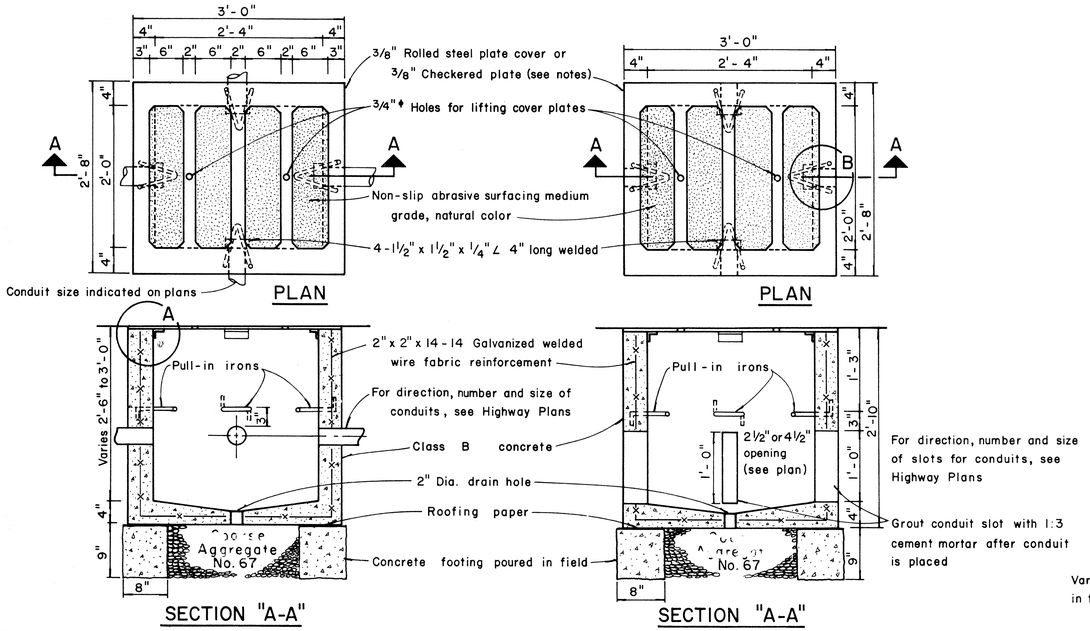

TYPE "A" PULLBOX CAST-IN-PLACE

Scale: 1" = 1'-0"

TYPE "A" PULLBOX PRECAST

Scale: 1" = 1'-0"

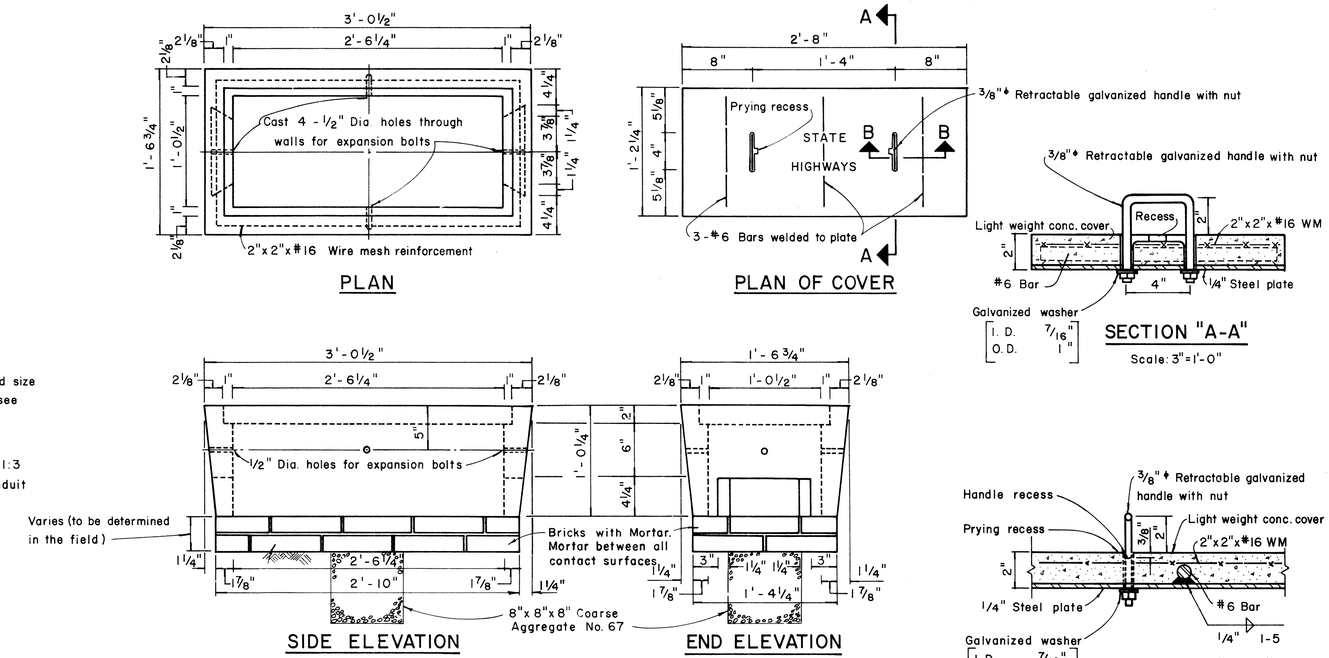

TYPE "C" PULLBOX

Scale: 1 1/2" = 1'-0"

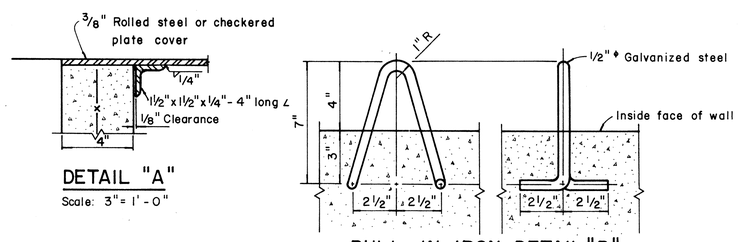

NOTES: (FOR TYPE "A" PULLBOX)

1. 3/8" Rolled steel plate cover with non-slip abrasive surfacing medium grade, natural color shall be used on all pullboxes located on sidewalk areas where pedestrians are walking.
2. 3/8" Checkered plate cover shall be used on all pullboxes located in median areas and other locations where there are no pedestrians walking.
3. Pull irons shall be placed opposite each conduit slot.
4. Covers on all pullboxes located in sidewalk areas shall be set flush with the concrete sidewalk.
5. Each pullbox shall have a pair of pull irons opposite each other for lifting purposes.

NOTE:

Steel rim shall be welded to bottom of steel cover if necessary so that top of cover and frame are flush

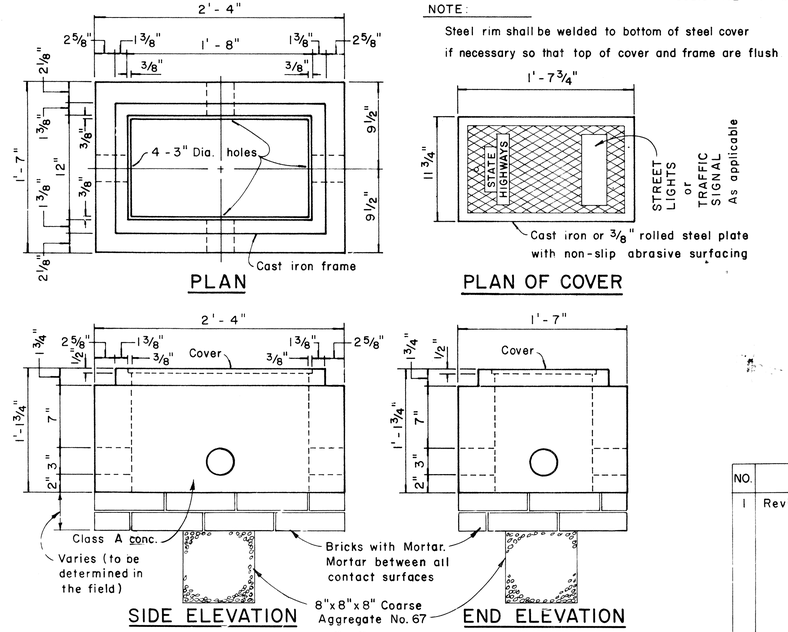

TYPE "B" PULLBOX

Scale: 1 1/2" = 1'-0"

APPROVAL RECOMMENDED: Eneki Tanaka — TRAFFIC ENGINEER — 12/ /89 DATE

APPROVED: — ASSISTANT CHIEF, ENGINEERING — 12-30-89 DATE

NO.	REVISION	APPROVED BY	DATE
1	Revised Type B & C Pullbox details	H.T.	3-5-90

STATE OF HAWAII
DEPARTMENT OF TRANSPORTATION
HIGHWAYS DIVISION

STANDARD DETAILS
PULLBOXES

Scale as noted — Date

SHEET No. 17 OF 19 SHEETS DT 401

ORIGINAL PLAN		DATE
	SURVEY PLOTTED BY	
	DRAWN BY	
	TRACED BY	
NOTE BOOK	DESIGNED BY	
	QUANTITIES BY	
No.	CHECKED BY	

PRINTED ON NO. 1000H CLEARPRINT

FED. ROAD DIST. NO.	STATE	PROJ. NO.	FISCAL YEAR	SHEET NO.	TOTAL SHEETS
HAWAII	HAW.	990-01-79	1980	18	19

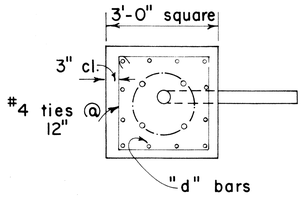

PLAN - SECTION

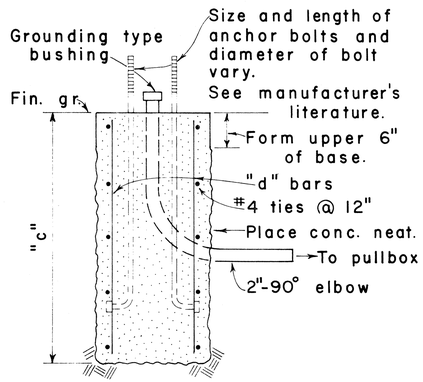

NOTE:

Concrete shall be Class B.

SECTION

MAST ARM LENGTH	"c"	"d" BARS
16' - 18'	5'-0"	12- #6
20'	5'-6"	12- #6
25'	6'-0"	12- #6
30'	6'-6"	12- #6
35'	7'-0"	12- #8
40'	8'-0"	12- #8

TYPE II

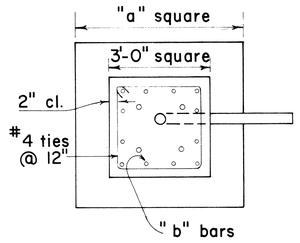

PLAN - SECTION

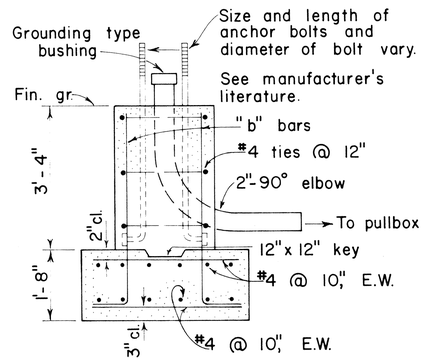

NOTE:

Concrete shall be Class B.

SECTION

MAST ARM LENGTH	"a"	"b" BARS
16' - 18'	5'-0"	12- #6
20'	5'-6"	12- #6
25'	6'-0"	12- #6
30'	6'-6"	12- #8
35'	6'-6"	12- #8
40'	7'-0"	12- #8

TYPE IIA

FOOTING FOR MAST ARM STANDARD

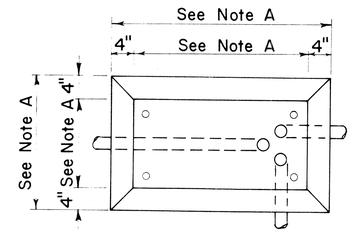

PLAN

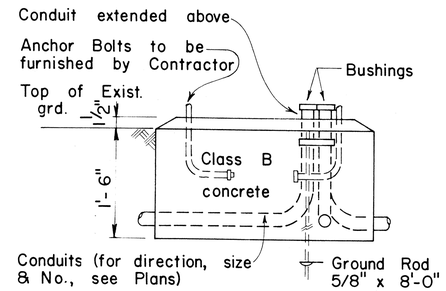

ELEVATION

CONCRETE BASE FOR CONTROLLER CABINET

NOTES:

A. Dimensions to be determined by the size of the Controller Cabinet to be furnished under this Contract.

B. Details of Conduits, Anchor Bolts, etc., are approximate only. Exact details shall be secured by the Contractor from Manufacturer.

TYPE II A MODIFIED FOUNDATION

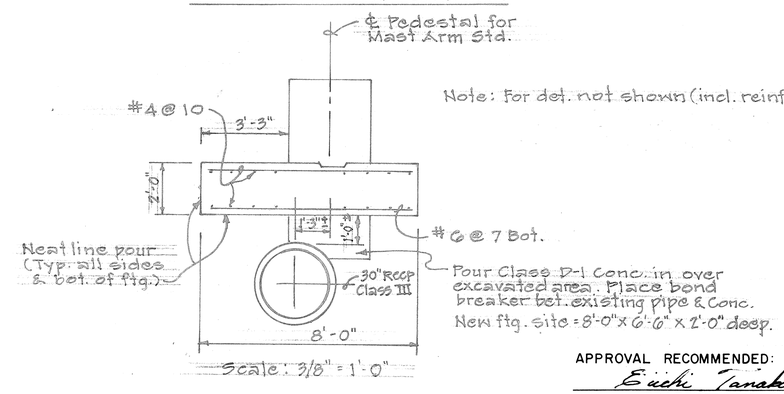

Note: For det. not shown (incl. reinf.) see this sheet.

APPROVAL RECOMMENDED:

Eiichi Tanaka — 3/4/76
TRAFFIC ENGINEER — DATE

APPROVED:

Herbert R. Richardson — 3-5-76
ASSISTANT CHIEF, ENGINEERING — DATE

NO.	REVISION	APPROVED BY	DATE

STATE OF HAWAII
DEPARTMENT OF TRANSPORTATION
HIGHWAYS DIVISION

TRAFFIC SIGNAL SYSTEM
MISCELLANEOUS DETAILS

Not to Scale

SHEET No. 18 OF 19 SHEETS DT404

ORIGINAL PLAN — NOTE BOOK No. — SURVEY PLOTTED BY — DRAWN BY — TRACED BY — DESIGNED BY — QUANTITIES BY — CHECKED BY — DATE

FED. ROAD DIST. NO.	STATE	PROJ. NO.	FISCAL YEAR	SHEET NO.	TOTAL SHEETS
HAWAII	HAW.	900-01-79	1980	19	19

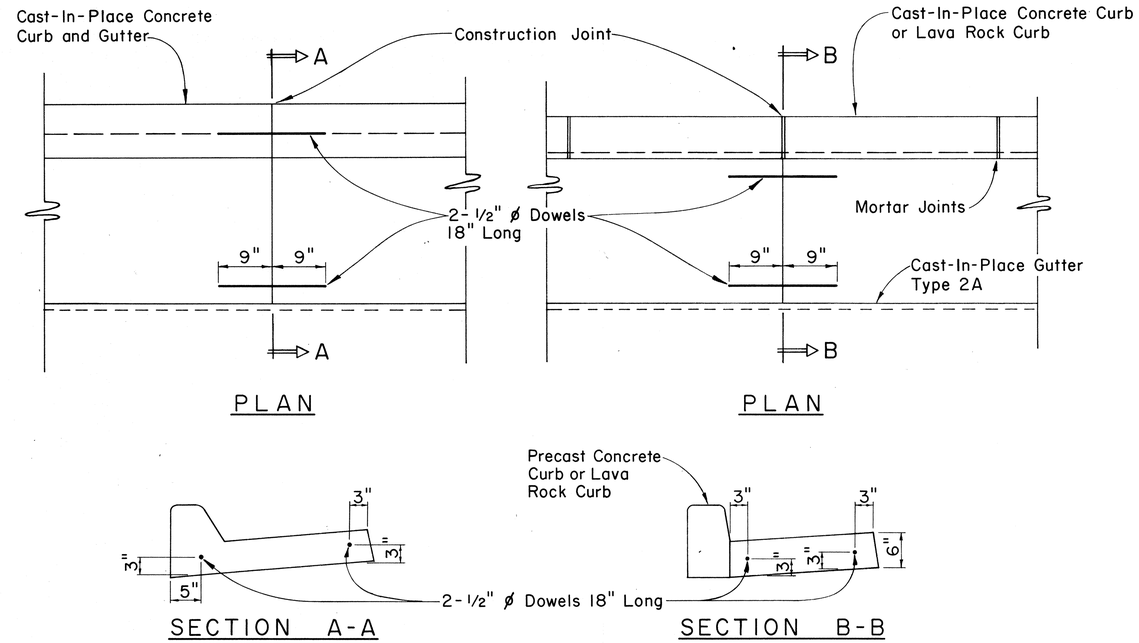

CAST-IN-PLACE CURB & GUTTER

CAST-IN-PLACE GUTTER

CONSTRUCTION JOINT DETAIL

Scale: 1" = 1'-0"

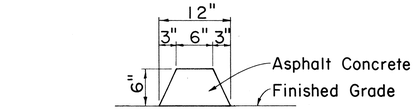

CURB, TYPE 6

BITUMINOUS CURB

Scale: 1 1/2" = 1'-0"

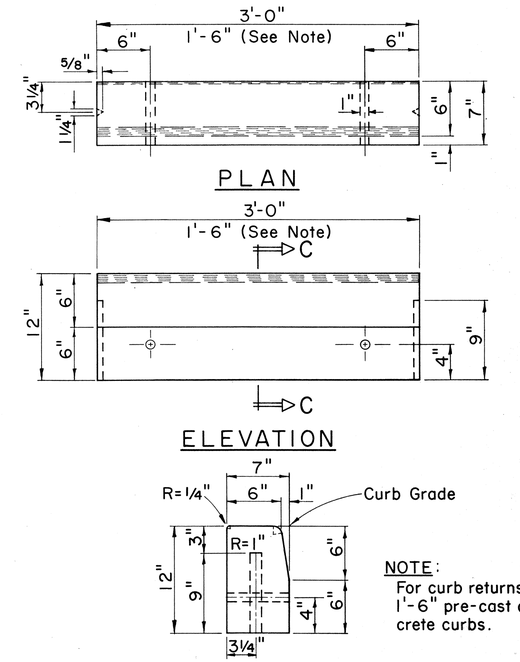

NOTE:
For curb returns use 1'-6" pre-cast concrete curbs.

SECTION C-C

CURB, TYPE 3D

PRE-CAST CONC. CURB

Scale: 1 1/2" = 1'-0"

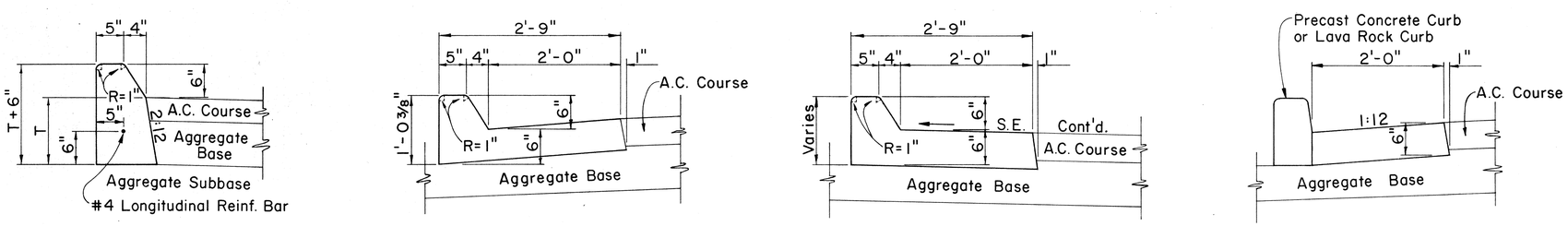

CURB, TYPE 2A

CURB & GUTTER, TYPE 2AG

CURB & GUTTER, TYPE 2AGM

GUTTER, TYPE 2A

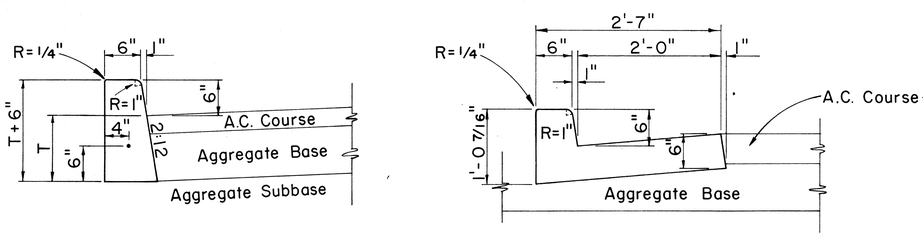

CURB, TYPE 2D

CURB & GUTTER, TYPE 2DG

GUTTER, TYPE 2G

CAST-IN-PLACE CONCRETE CURBS AND/OR GUTTERS

Scale: 1" = 1'-0"

APPROVAL RECOMMENDED:
M. Hirozawa — HIGHWAY DESIGN ENGINEER — 12-4-69 DATE

APPROVED:
Walter G. Sakai — ASSISTANT CHIEF, ENGINEERING — 12-10-69 DATE

NO.	REVISION	APPROVED BY	DATE

STATE OF HAWAII
DEPARTMENT OF TRANSPORTATION
HIGHWAYS DIVISION

STANDARD DETAILS

TYPICAL DETAILS OF CURB AND/OR GUTTERS

Scale: As Shown

SHEET No. 19 OF 19 SHEETS | DD 609.1

ORIGINAL PLAN	SURVEY PLOTTED BY	DATE
	SURVEY BY	"
	TRACED BY	"
NOTE BOOK	DESIGNED BY	"
	QUANTITIES BY	"
No.	CHECKED BY	"