FED. ROAD DIST. NO.	STATE	FED. AID PROJ. NO.	FISCAL YEAR	SHEET NO.	TOTAL SHEETS
HAWAII	HAW.	HHS-099-1(8)	1975	7	11

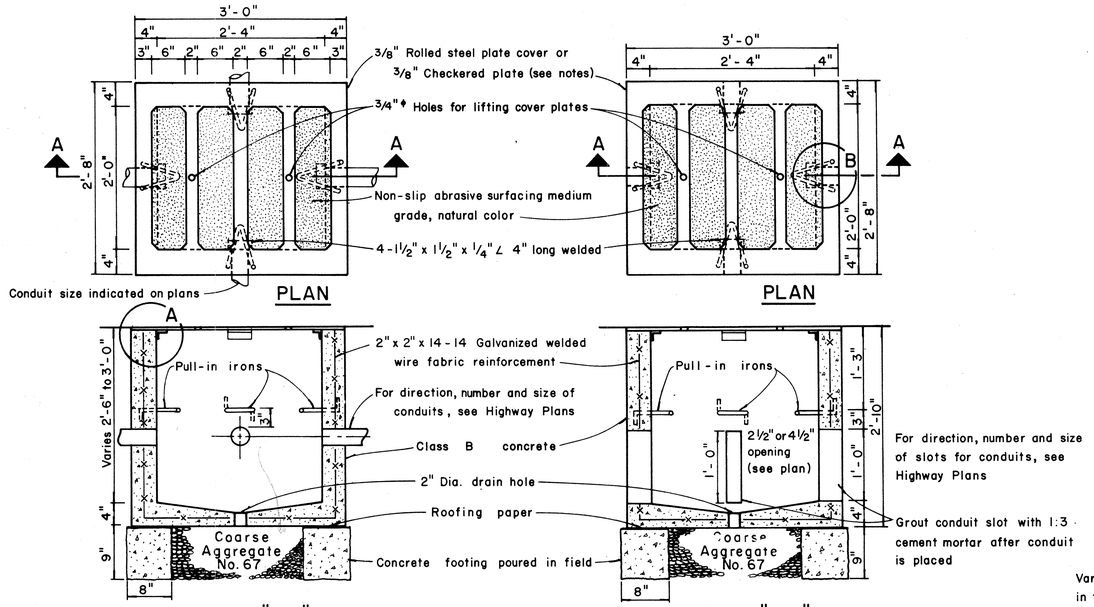

TYPE "A" PULLBOX CAST-IN-PLACE

Scale: 1" = 1'-0"

TYPE "A" PULLBOX PRECAST

Scale: 1" = 1'-0"

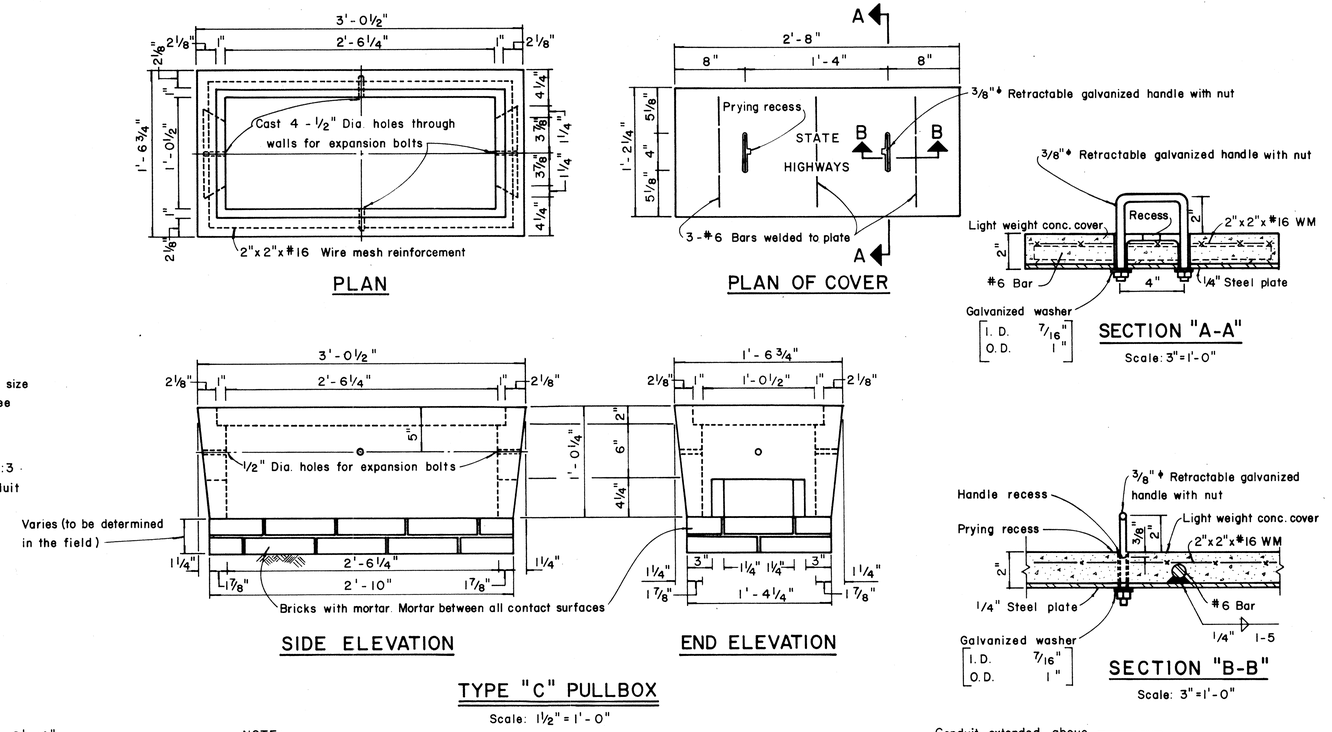

TYPE "C" PULLBOX

Scale: 1 1/2" = 1'-0"

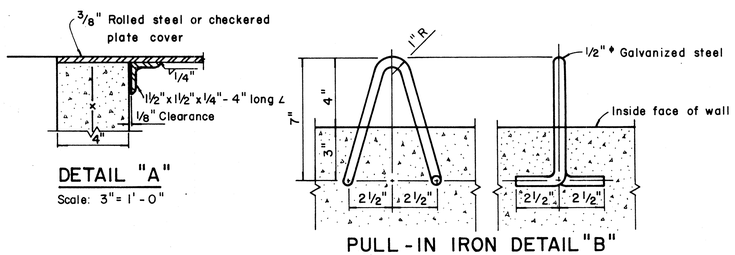

NOTES: (FOR TYPE "A" PULLBOX)

1. 3/8" Rolled steel plate cover with non-slip abrasive surfacing medium grade, natural color shall be used on all pullboxes located on sidewalk areas where pedestrians are walking.
2. 3/8" Checkered plate cover shall be used on all pullboxes located in median areas and other locations where there are no pedestrians walking.
3. Pull irons shall be placed opposite each conduit slot.
4. Covers on all pullboxes located in sidewalk areas shall be set flush with the concrete sidewalk.
5. Each pullbox shall have a pair of pull irons opposite each other for lifting purposes.

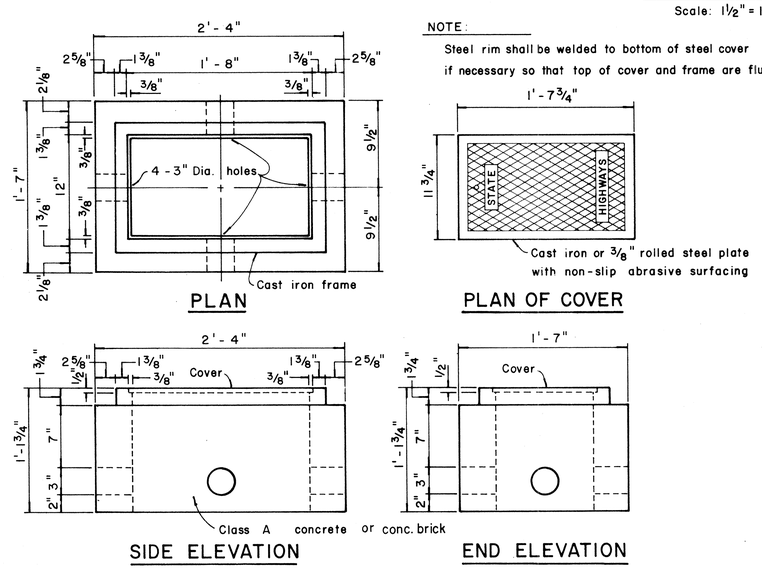

TYPE "B" PULLBOX

Scale: 1 1/2" = 1'-0"

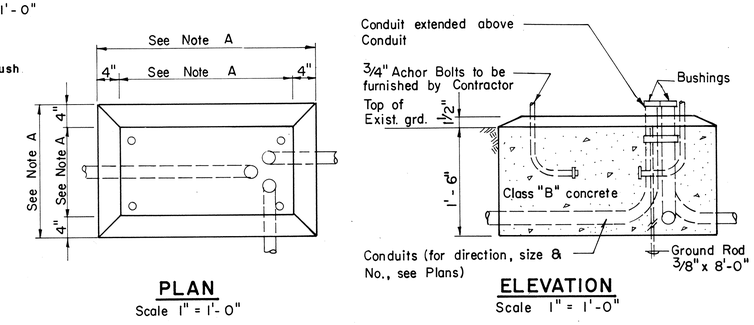

NOTES

A. Dimensions to be determined by the size of the Controller Cabinet to be furnished under this Contract.

B. Details of Conduits, Anchor Bolts, etc. are approximate only. Exact details shall be secured by the Contractor from Manufacturer.

CONCRETE BASE FOR CONTROLLER CABINET

STATE OF HAWAII
DEPARTMENT OF TRANSPORTATION
HIGHWAYS DIVISION

TYPICAL DETAILS
PULLBOXES

Scale as noted Date

SHEET No. 1 OF 1 SHEETS

7

ORIGINAL PLAN		DATE
	SURVEY PLOTTED BY	
	DRAWN BY	
	TRACED BY	
NOTE BOOK	DESIGNED BY	
	QUANTITIES BY	
No.	CHECKED BY	

PRINTED ON NO. 1000H CLEARPRINT