FED. ROAD DIST. NO.	STATE	FED. AID PROJ. NO.	FISCAL YEAR	SHEET NO.	TOTAL SHEETS
HAWAII	HAW.	U-090-1-(16)	1969	2	80

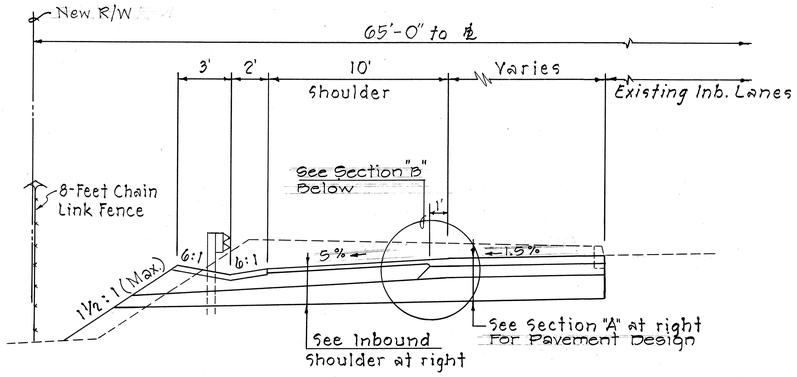

TYPICAL FILL SECTION

Scale: 1/4" = 1'-0"

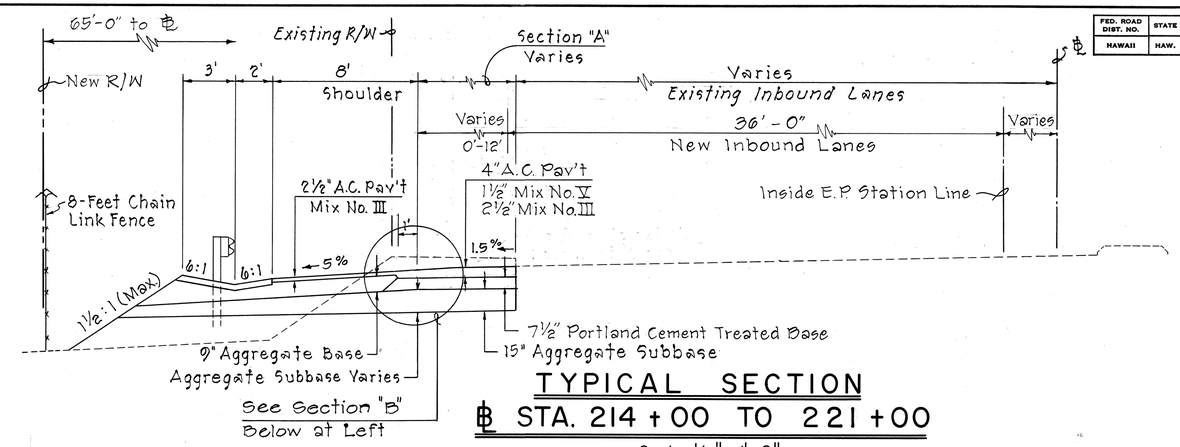

TYPICAL SECTION

℄ STA. 214 + 00 TO 221 + 00

Scale: 1/4" = 1'-0"

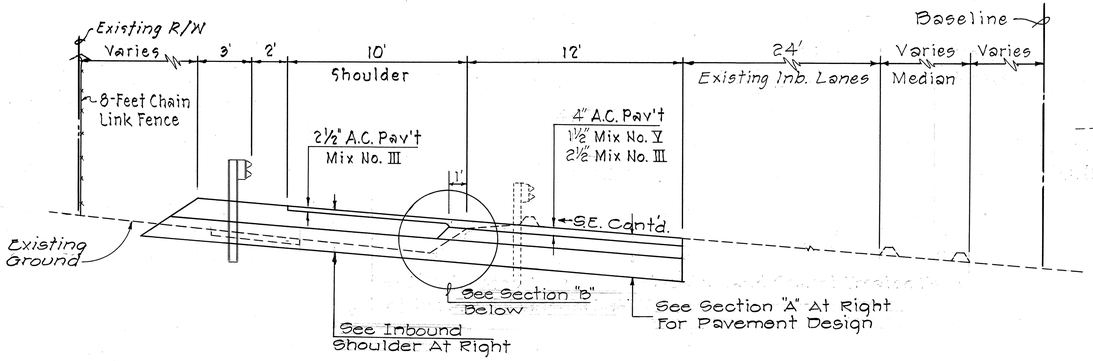

TYPICAL CURVE SECTION

Scale: 1/4" = 1'-0"

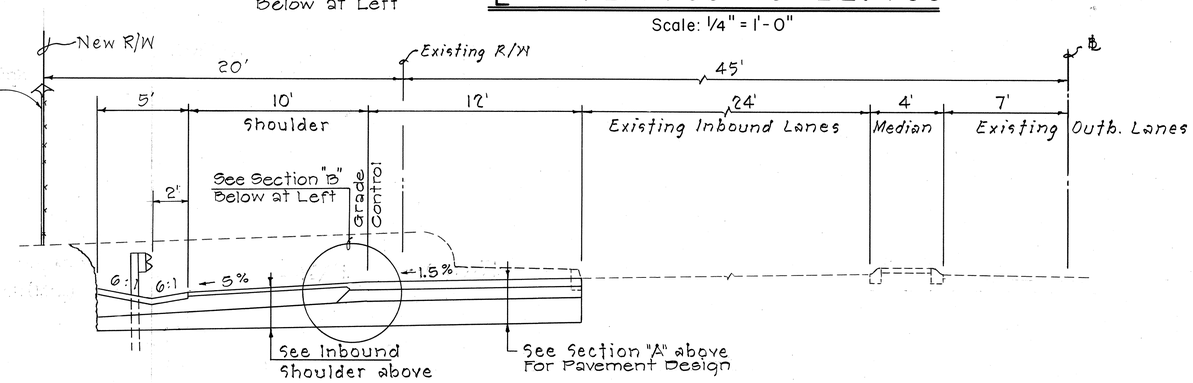

TYPICAL CUT SECTION

Scale: 1/4" = 1'-0"

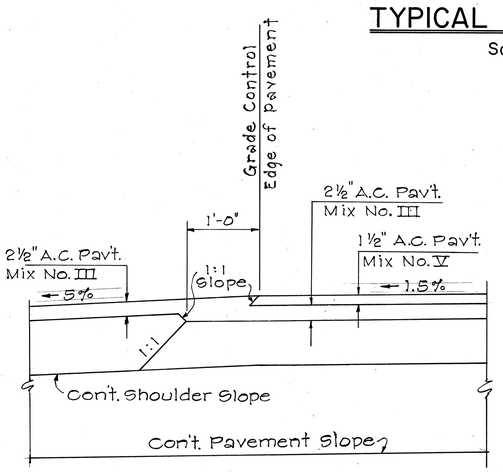

SECTION "B"

Not to Scale

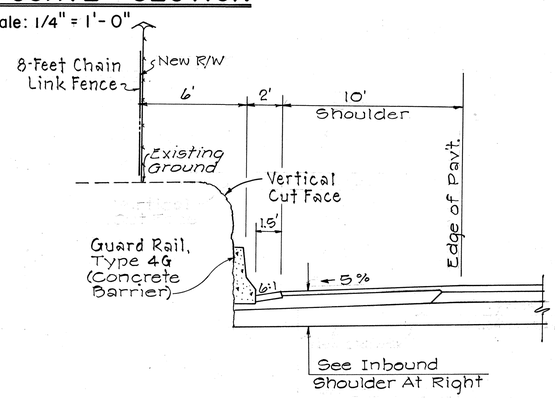

TYPICAL SECTION

℄ STA. 227 + 73 TO ~~231 + 50 ±~~ 232 + 00 ±

Scale: 1/4" = 1'-0"

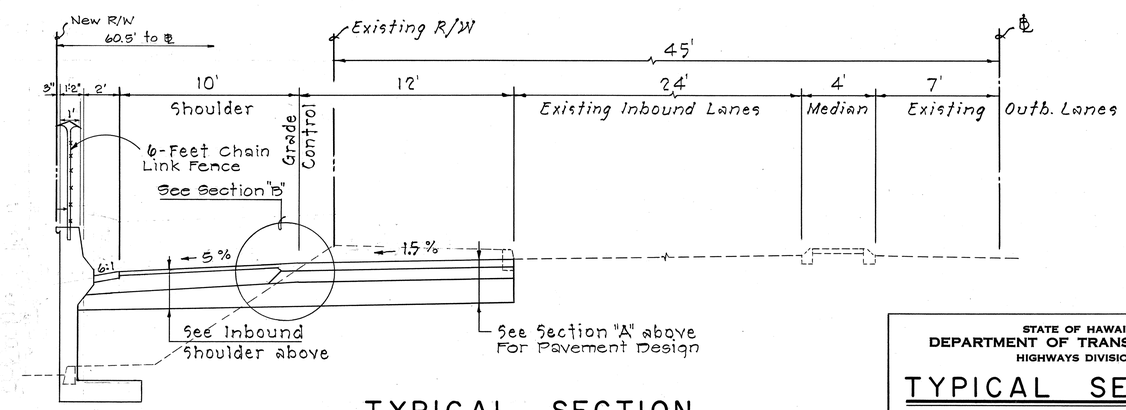

TYPICAL SECTION

℄ STA. 222 + 33 TO 227 + 73

Scale: 1/4" = 1'-0"

STATE OF HAWAII
DEPARTMENT OF TRANSPORTATION
HIGHWAYS DIVISION

TYPICAL SECTIONS

PROJ. NO. U-090-1(16)

Scale: As Noted — April 1969

SHEET No. 1 OF 1 SHEETS

ORIGINAL PLAN	SURVEY PLOTTED BY	DATE
	DRAWN BY	
	TRACED BY	
	DESIGNED BY	
NOTE BOOK	QUANTITIES BY	
No.	CHECKED BY	