FED. ROAD DIST. NO.	STATE	FED. AID PROJ. NO.	FISCAL YEAR	SHEET NO.	TOTAL SHEETS
HAWAII	HAW.	F-099-1(4)	1968	2	9

Baseline Sta. 81+00 to 81+59 Right
Construct Rolled Curb - 66 Lin Ft.
Match existing rolled curb.

Baseline Sta. 75+00 to 81+00 Right
Install Metal Guard Rail - 600 Lin. Ft.
Flare approach end into existing earth mound.
The Contractor shall make adjustments to the Guard Rail, if required, in the vicinity of the existing Water Line as directed by the Engineer.

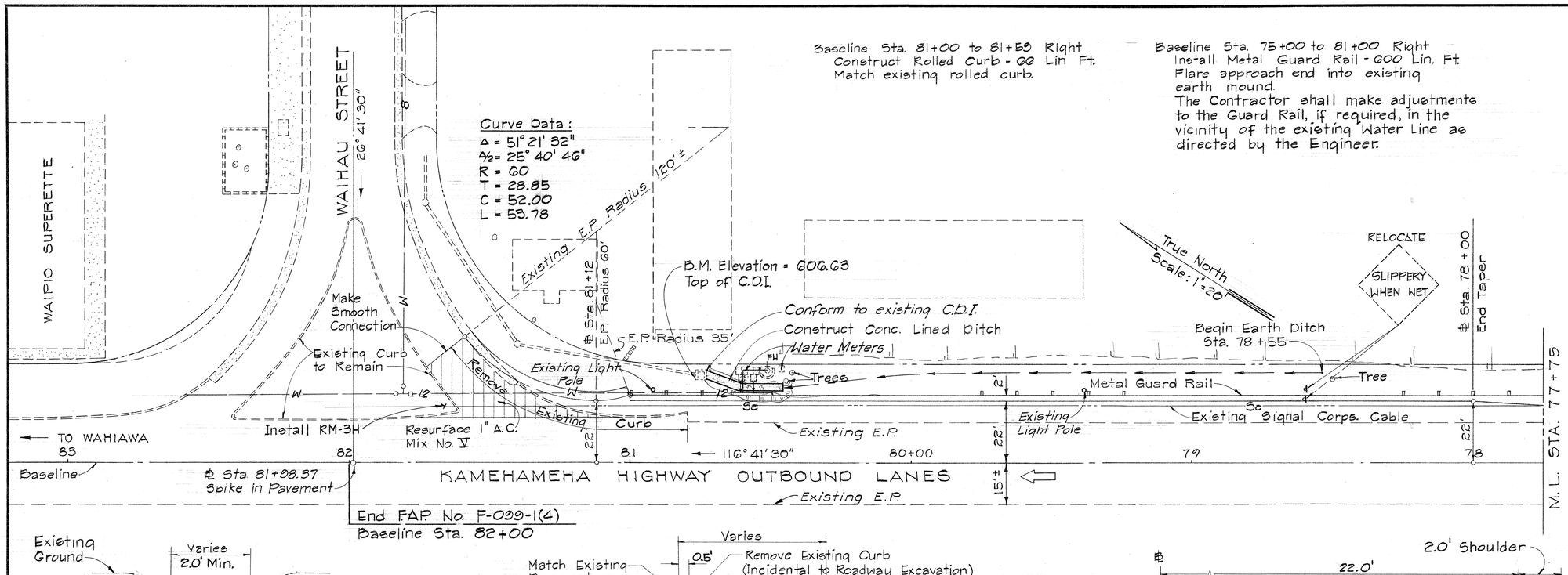

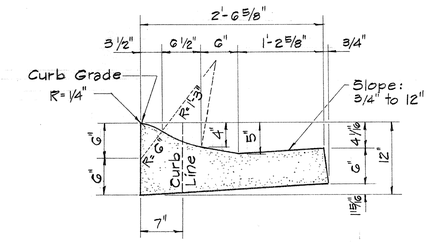

CAST IN PLACE ROLLED CURB

Scale: 1" = 1'-0"

Sta. 76+50 to Sta. 81+00
Medium Curing Liquid Asphalt (MC-800) & Crushed Rock, size no. 8 for Seal Coat at 2.0' Shoulder.

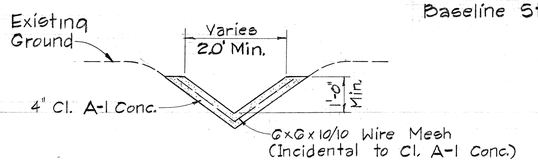

TYPICAL SECTION - CONCRETE LINED DITCH

Scale: 1/2" = 1'-0"

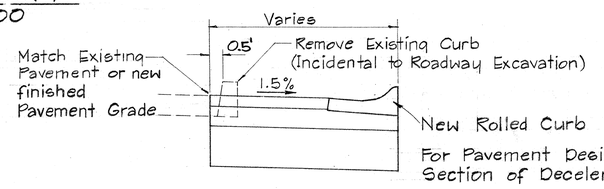

SECTION AT EXISTING CURB
NEW ROLLED CURB

Scale: 3/8" = 1'-0"

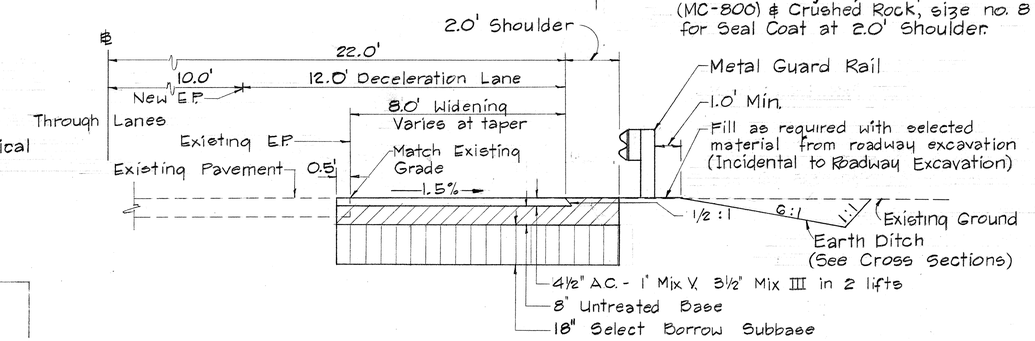

TYPICAL SECTION - DECELERATION LANE

Scale: 3/8" = 1'-0"

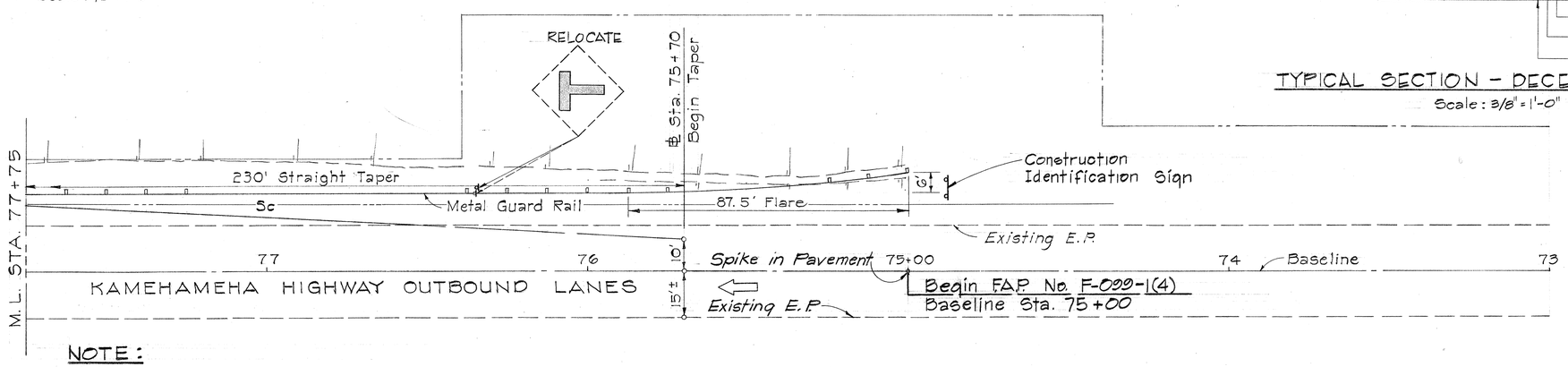

NOTE:

1. Painted Stripes to be done by State Forces.
2. Excavation for the Earth Ditch will be paid for under Roadway Excavation.
3. The existing Signal Corps. Cable (direct buriel) is located approximately 6 feet from the existing edge of Pavement at a depth of 30 to 36 inches.
4. The Contractor shall notify the Hawaiian Telephone Co. Inspector 48 hours before excavating.
5. Adjustments to Service Laterals and/or Meters to facilitate construction shall be made by B.W.S. and paid for by the Contractor. No direct payment shall be made for this work which shall be incidental to the various Contract Items.

ORIGINAL PLAN	SURVEY PLOTTED BY	DATE
	DRAWN BY	
	TRACED BY	
NOTE BOOK	DESIGNED BY	
	QUANTITIES BY	
No.	CHECKED BY	

STATE OF HAWAII
DEPARTMENT OF TRANSPORTATION
HIGHWAYS DIVISION

PLAN & DETAILS

KAMEHAMEHA HWY. IMPROVEMENTS AT WAIHAU STREET

Fed. Aid. Proj. No. F-099-1(4)

Scale: As Noted. Date: April 1968

SHEET No. 2 OF 9 SHEETS

PRINTED ON NO. 1000H CLEARPRINT