FED. ROAD DIST. NO.	STATE	FED. AID PROJ. NO.	FISCAL YEAR	SHEET NO.	TOTAL SHEETS
HAWAII	HAW.	F-090-1(14)	1968	12	24

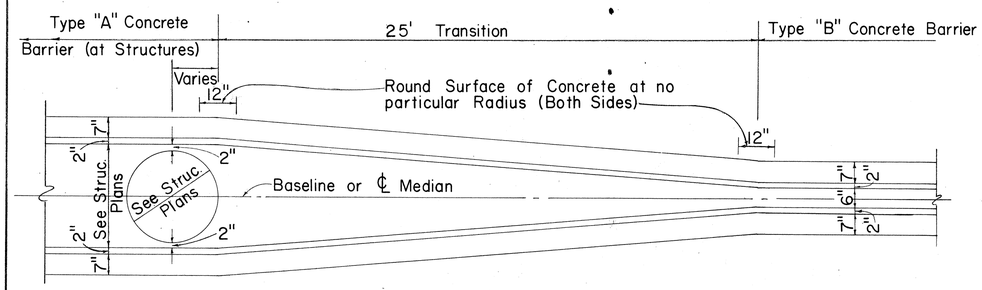

TYPICAL TRANSITION PLAN FROM TYPE "A" TO TYPE "B" CONC. BARRIER

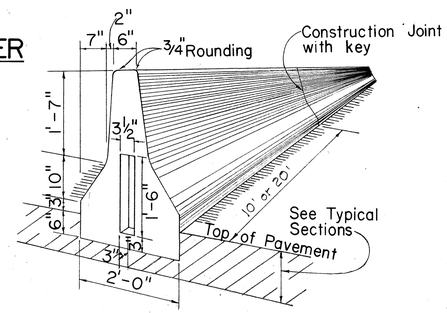

TYPE "B" CONC. BARRIER (AT TANGENT SECTIONS)

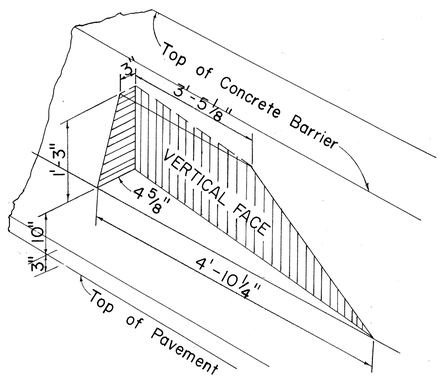

DETAIL OF NOTCH IN CONCRETE BARRIER

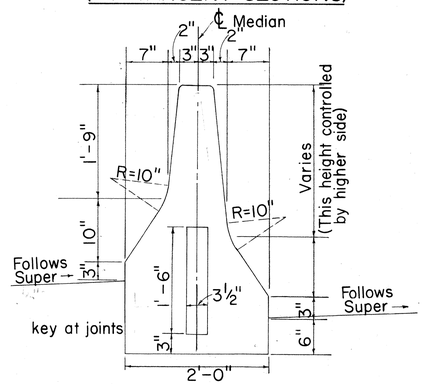

TYPICAL SECTION TYPE "B" CONC. BARRIER (AT SUPERELEVATED SECTIONS)

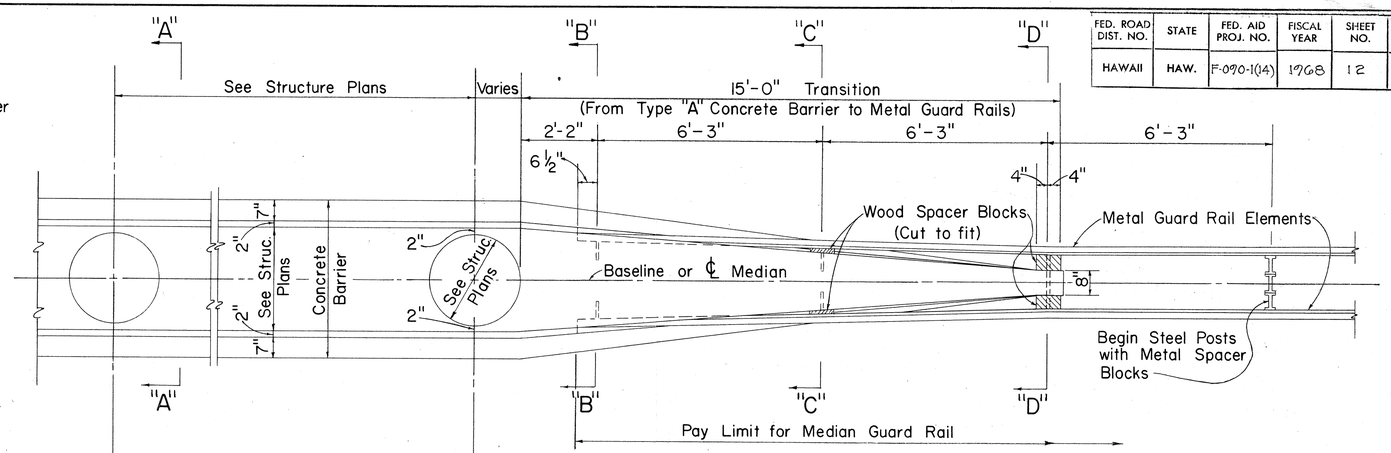

PLAN

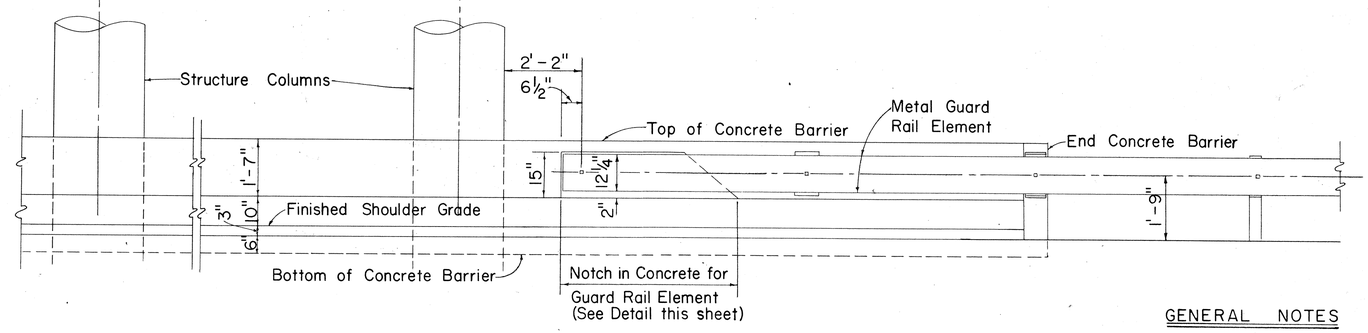

ELEVATION

TYPE "A" CONCRETE BARRIER FOR MEDIANS

GENERAL NOTES

1. Concrete for Concrete Barriers shall be Class "A-1".
2. The Contractor shall furnish and install 5/8" ø bolts of appropriate lengths, and appurtenant washers, nuts and wooden blocks for anchoring metal guard rail elements to Concrete Barrier. (Incidental to Metal Guard Rail.)

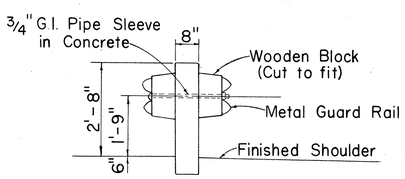

SECTION "D-D"

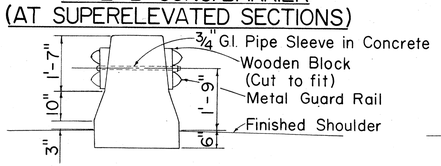

SECTION "C-C"

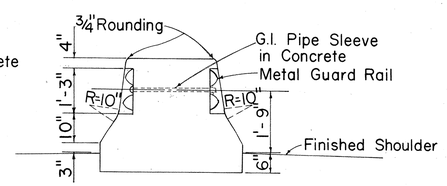

SECTION "B-B"

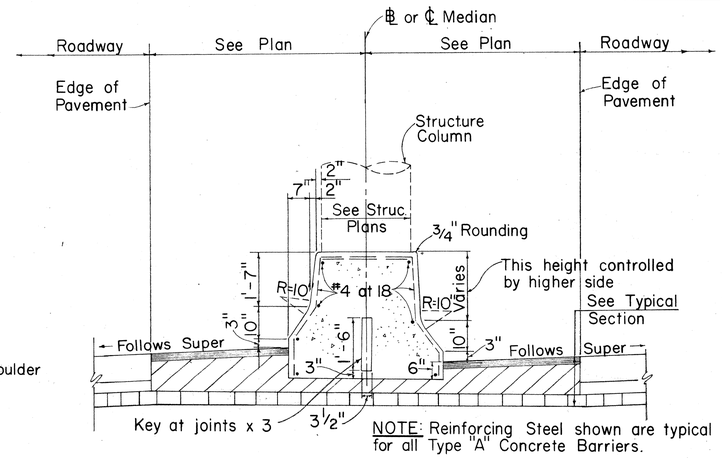

TYPE "A" CONCRETE BARRIER SECTION "A-A"

STATE OF HAWAII
DEPARTMENT OF TRANSPORTATION
HIGHWAYS DIVISION

CONCRETE BARRIER

KAMEHAMEHA HWY. WIDENING
PROJECT NO. F-090-1(14)

ORIGINAL PLAN	SURVEY PLOTTED BY	DATE
	DRAWN BY	"
	TRACED BY	"
	DESIGNED BY	"
NOTE BOOK	QUANTITIES BY	"
No.	CHECKED BY	"

FED. ROAD DIST. NO.	STATE	FED. AID PROJ. NO.	FISCAL YEAR	SHEET NO.	TOTAL SHEETS
HAWAII	HAW.	F-090-1(14)	1968	13	24

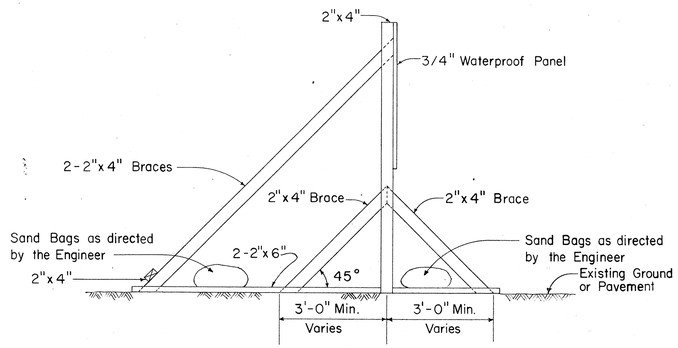

SIDE ELEVATION

SIGN FRAME WEIGHTED DOWN

SCALE: 1/2" = 1'-0"

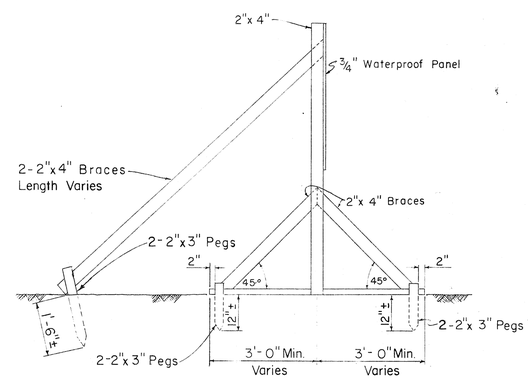

SIDE ELEVATION

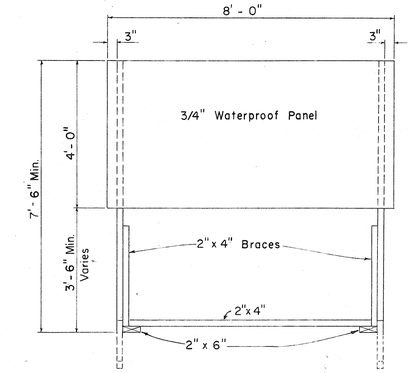

FRONT ELEVATION

SIGN FRAME ANCHORED IN GROUND

Scale: 1/2" = 1'-0"

NOTE:

1. Dimensions shown are approximate. Contractor shall verify dimensions for installing signs to suit existing mounting holes on signs.
2. "FORD ISLAND FERRY" sign shall be constructed on two (2) posts.

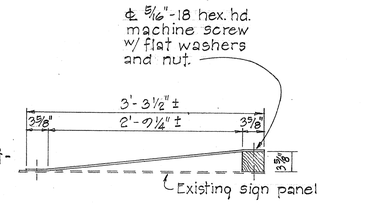

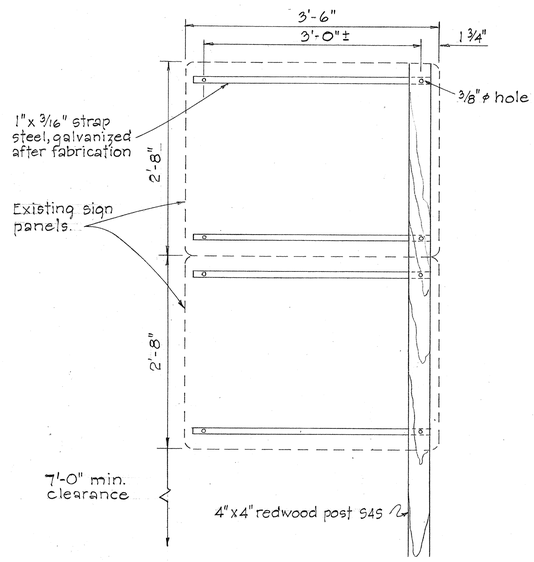

DETAIL FOR RELOCATED SIGN ON WOOD POST

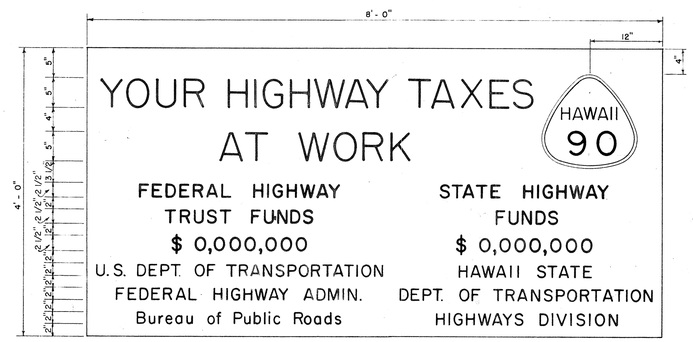

SIGN PANEL

Scale: 1" = 1'-0"

PRIMARY AND SECONDARY SYSTEMS CONSTRUCTION IDENTIFICATION SIGN

Scale: As Shown

CONSTRUCTION IDENTIFICATION SIGN NOTES

1. The Contractor shall construct, install and maintain the Construction Identification Signs, at the locations shown on the plans and as ordered by the Engineer.
2. All costs incurred in the construction, installation and maintenance of the Construction Identification Signs, will not be paid for separately, but shall be considered as included in the unit price paid for the various items in the proposal.
3. The Construction Identification Signs shall be removed and stockpiled at the completion of the project as ordered by the Engineer and are to become State Property.
4. The exact figures for the various funds involved will be furnished to the Contractor for the incorporation in the Construction Identification Signs.
5. The legend shall be black on white background unless otherwise specified.
6. Refer to Sheet No. 18 for details on the exact shape and size of the State route marker to be shown on these Construction Identification Signs.
7. All letters shall be of size and design shown and shall conform with "Standard Alphabets for Highway Signs", Bureau of Public Roads, 1952. Use Series "C" letters unless otherwise noted.

ORIGINAL PLAN	SURVEY PLOTTED BY	DATE
	DRAWN BY	"
	TRACED BY	"
NOTE BOOK	DESIGNED BY	"
	QUANTITIES BY	"
No.	CHECKED BY	"

STATE OF HAWAII
DEPARTMENT OF TRANSPORTATION

STANDARD DETAILS

MISCELLANEOUS DETAILS AND CONSTRUCTION IDENTIFICATION SIGNS

KAMEHAMEHA HWY. WIDENING
PROJECT NO. F-090-1(14)

125 IMPERIAL TRACING CLOTH 10-62

FED. ROAD DIST. NO.	STATE	FED. AID PROJ. NO.	FISCAL YEAR	SHEET NO.	TOTAL SHEETS
HAWAII	HAW.	F-070-1(14)	1968	14	24

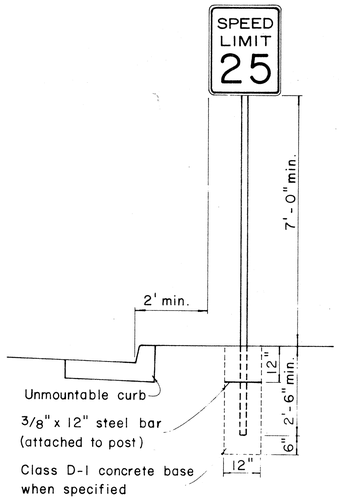

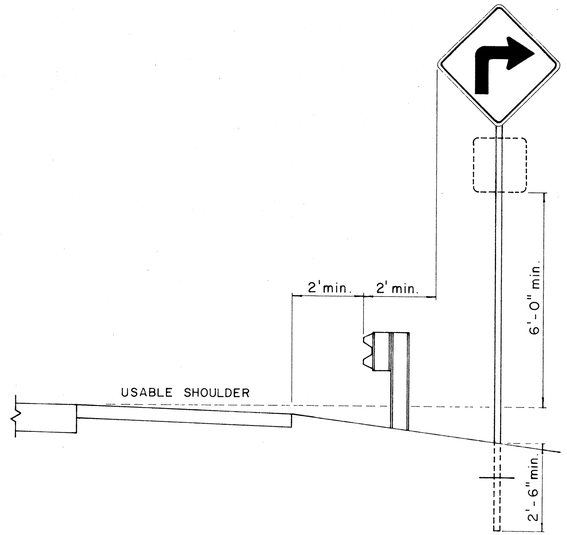

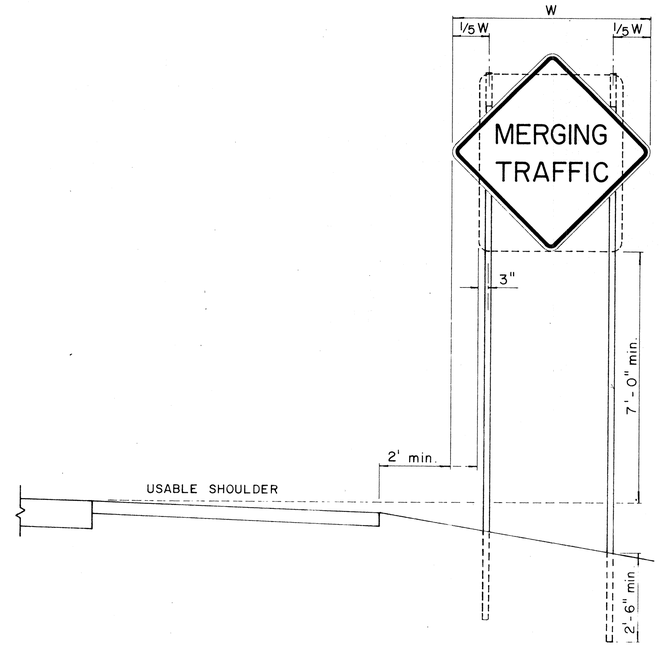

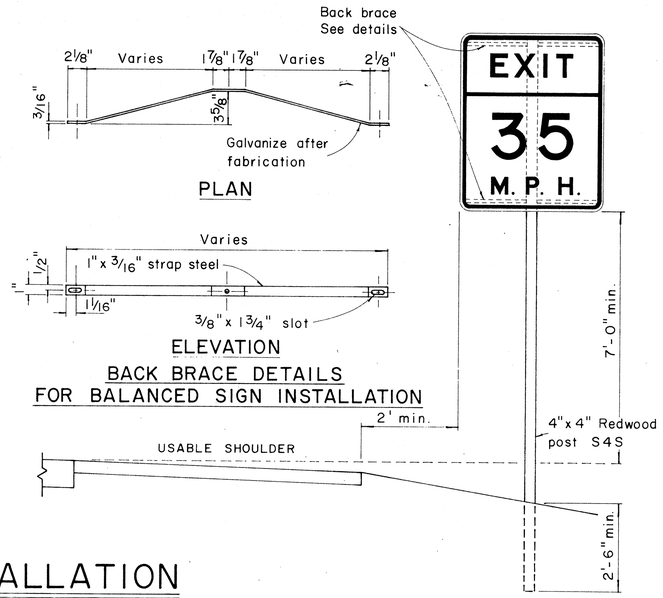

HEIGHT AND LATERAL LOCATION OF SIGNS - TYPICAL INSTALLATION

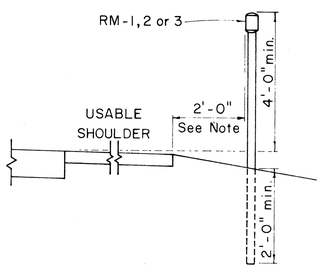

ROAD DELINEATOR

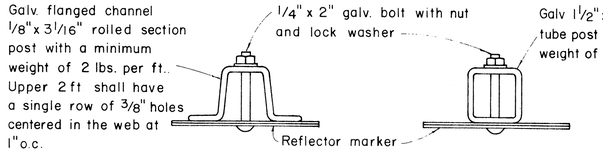

TYPICAL SECTION OF ROAD DELINEATOR

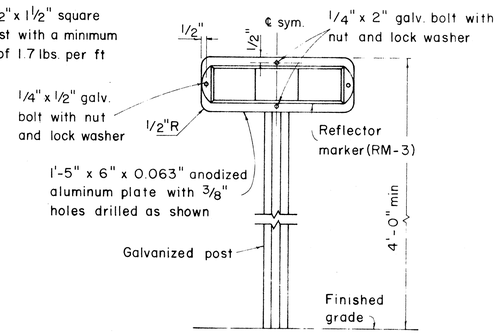

TYPICAL DETAIL
HORIZONTAL REFLECTOR MARKER
RM-3H

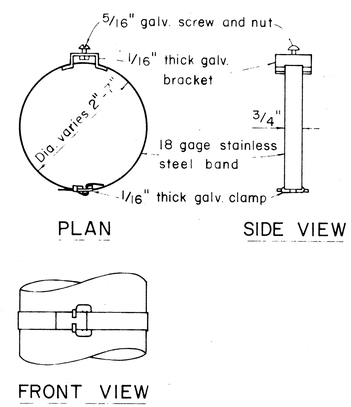

TYPICAL BAND BRACKET FOR
MOUNTING TRAFFIC SIGNS

GENERAL NOTES:

1. Sign posts shall be 2" galv. standard pipe or 2" x 2" galv. sq. tube post.
2. Signs 48" and wider or larger than 10 sq. ft. in area shall be mounted on two 2" galv. standard pipe or two 2" x 2" galv. sq. tube post or 4" x 4" redwood post S4S.
3. Signs shall be attached to post with 5/16" galv. bolts with nuts and 7/8" x 0.06 stainless steel washers with neoprene rubber gasket.
4. Sign posts shall extend 3 1/2" above sign where required for City and County street name signs.
5. Reflector markers RM-1, 2, 3 shall be glass sphere reflector markers with 4" x 5" reflector units (as shown) or plastic prismatic reflector markers with 3" diameter reflector units.
6. Clearance markers (RM-3, RM-4) shall be installed with the edge of the marker in line with the inner edge of the obstruction.
7. (R) or (L) indicates right or left and shall be as shown on the plans.

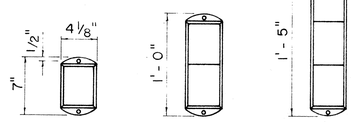

RM-1 (CLEAR) RM-2 (AMBER) RM-3 (AMBER)

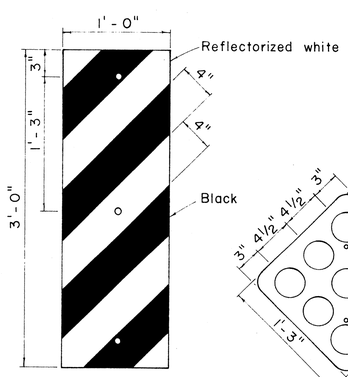

RM-4 (R)

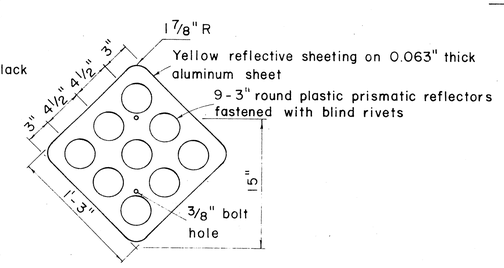

RM-9

REFLECTOR MARKERS

ORIGINAL PLAN	SURVEY PLOTTED BY	DATE
	DRAWN BY	
	TRACED BY	
NOTE BOOK	DESIGNED BY	
	QUANTITIES BY	
No.	CHECKED BY	

STATE OF HAWAII
DEPARTMENT OF TRANSPORTATION
HIGHWAYS DIVISION

STANDARD DETAILS

MISCELLANEOUS SIGN DETAILS

Not to scale March, 1968

SHEET No. 3 OF 10 SHEETS

14

PRINTED ON NO. 1000M CLEARPRINT

2/17/59
9/22/61

FED. ROAD DIST. NO.	STATE	FED. AID PROJ. NO.	FISCAL YEAR	SHEET NO.	TOTAL SHEETS
HAWAII	HAW.	F-090-1(14)	1968	15	24

Aug. 1957

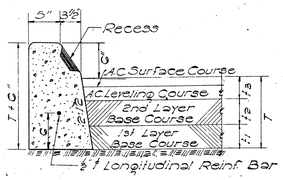

TYPE "A" & "B" CURB
SCALE: 1" = 1'-0"

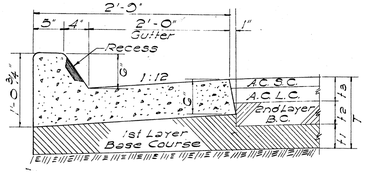

TYPE "AG" & "BG" CURB & GUTTER
SCALE: 1" = 1'-0"

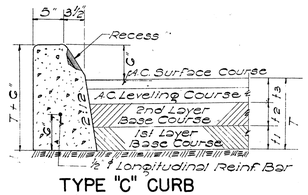

TYPE "C" CURB
SCALE: 1" = 1'-0"

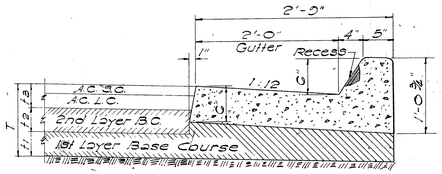

TYPE "CG" CURB & GUTTER
SCALE: 1" = 1'-0"

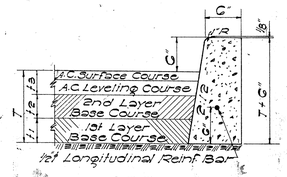

TYPE "D" CURB
SCALE: 1" = 1'-0"

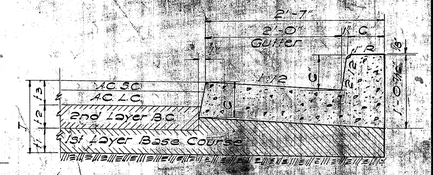

TYPE "DG" CURB & GUTTER
SCALE: 1" = 1'-0"

General Note Covering All Types of Curbs:
Occasionally curb rests on first layer of base course. See typical sections.

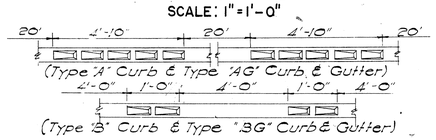

TYPE AND SPACING OF RECESSES

NOTES:
1) Types 'AG', 'BG', 'CG', 'DG' and 'EG' Concrete Curbs and Gutters are to be poured monolithically.
2) Types 'A', 'B' and 'C' Curbs and Types 'AG' 'BG' and 'CG' Curbs and Gutters occur at Median Strips and Traffic Islands.
3) Shaded area in Curbs are to be painted with an approved white lacquer. (One Coat)
4) All Conc. Curbs and Gutters shown herein are to be of Class 'A-1' Conc. and Cast in Place.

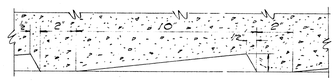

SECTION "A-A"

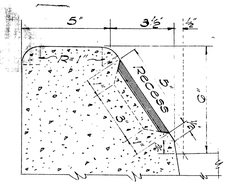

SECTION "B-B"
TYPE "A" & "B" CURB

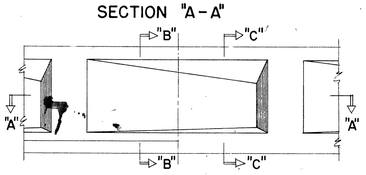

ELEVATION
SCALE: 3" = 1'-0"

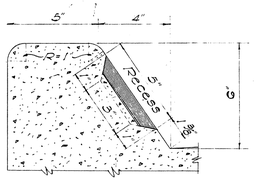

SECTION "C-C"
TYPE "AG" & "BG" CURB

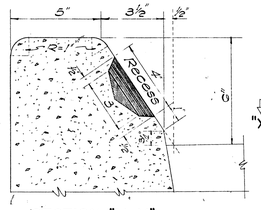

SECTION "Y-Y"
TYPE "C" CURB

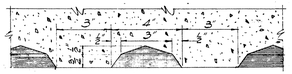

SECTION "X-X"

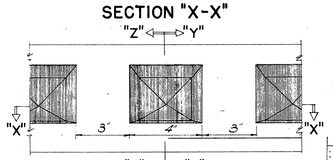

ELEVATION
SCALE: 3" = 1'-0"

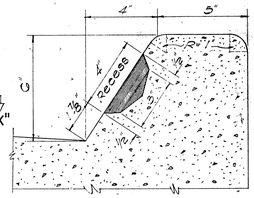

SECTION "Z-Z"
TYPE "CG" CURB

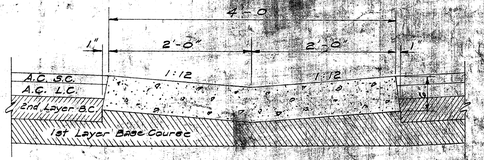

TYPE "G" GUTTER
SCALE: 1" = 1'-0"

DETAILS OF CAST-IN-PLACE CONC. CURBS AND GUTTERS

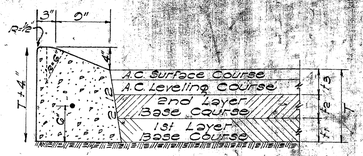

TYPE "E" CAST-IN-PLACE CONCRETE CURB
SCALE: 1" = 1'-0"

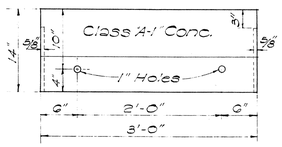

FRONT ELEV.

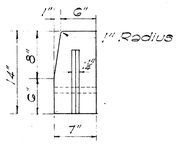

END ELEV.

PRECAST CONC. CURB
SCALE: 1" = 1'-0"

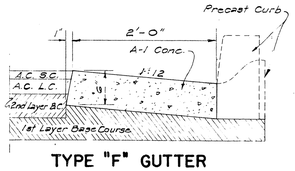

TYPE "F" GUTTER FOR PRECAST CURB

PLAN
SCALE: 1/2" = 1'-0"

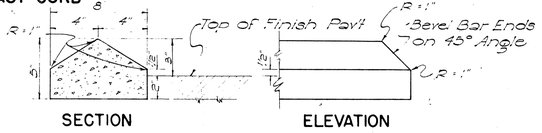

SECTION
ELEVATION

RAISED TRAFFIC BARS
SCALE: 2" = 1'-0"

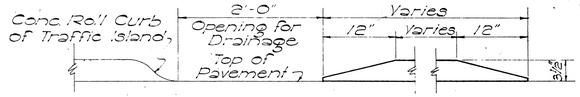

ELEVATION

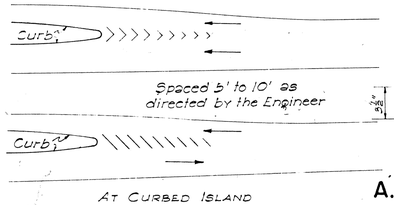

AT CURBED ISLAND

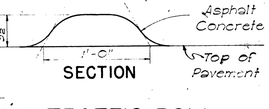

SECTION

A.C. TRAFFIC ROLL
NOT TO SCALE

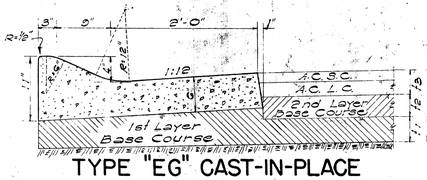

TYPE "EG" CAST-IN-PLACE CONC. CURB & GUTTER
SCALE: 1" = 1'-0"

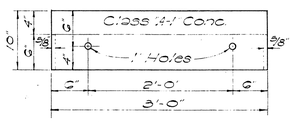

FRONT ELEV.

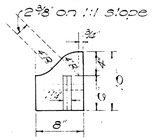

END ELEV.

PRECAST CONC. ROLL CURB
SCALE: 1" = 1'-0"

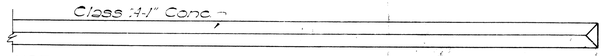

NOTE:
Section and Elevation for Jiggle Bars are same as the Traffic Bars.

PLAN

RAISED JIGGLE BARS
SCALE: 1/2" = 1'-0"

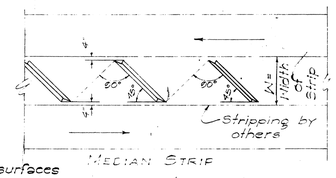

NOTE:
Paint all exposed surfaces of bars with beaded white traffic lacquer.

LAYOUT OF JIGGLE BARS
NOT TO SCALE

APPROVED: DATE Aug. 26, 1959
STATE HIGHWAY ENGINEER

STATE OF HAWAII
DEPARTMENT OF TRANSPORTATION
HIGHWAYS DIVISION
STANDARD DETAILS
CONCRETE CURBS, CONCRETE CURBS & GUTTERS
SCALES AS NOTED

SHEET Nº 4 OF 10 SHEETS

15

"E" and "EG" Curbs have been revised 7-26-57
"G" and "F" Gutters have been added 9-22-61

ORIGINAL PLAN	SURVEY PLOTTED BY / DESIGN BY / DRAWN BY / TRACED BY / QUANTITIES BY / QUANTITIES CHECKED BY / CHECKED BY	DATE
NOTE BOOK No.		

J. Galstro

FED. ROAD DIST. NO.	STATE	FED. AID PROJ. NO.	FISCAL YEAR	SHEET NO.	TOTAL SHEETS
HAWAII	HAW.	F-090-1(14)	1968	16	24

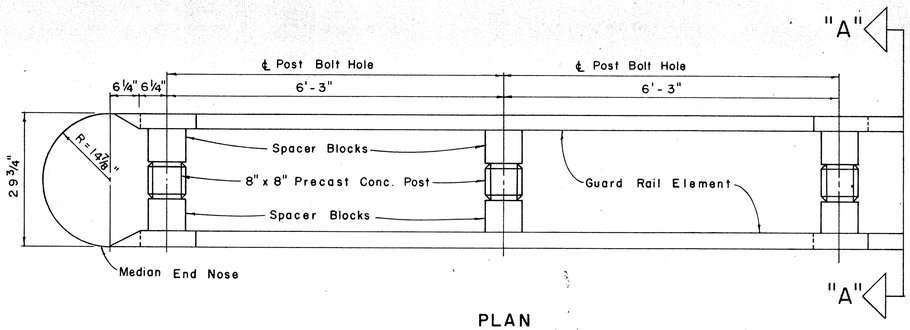

PLAN

Scale: ¾" = 1'-0"

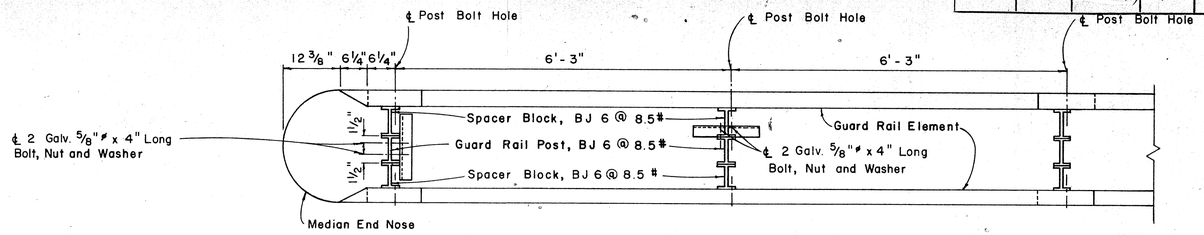

PLAN

Scale: ¾" = 1'-0"

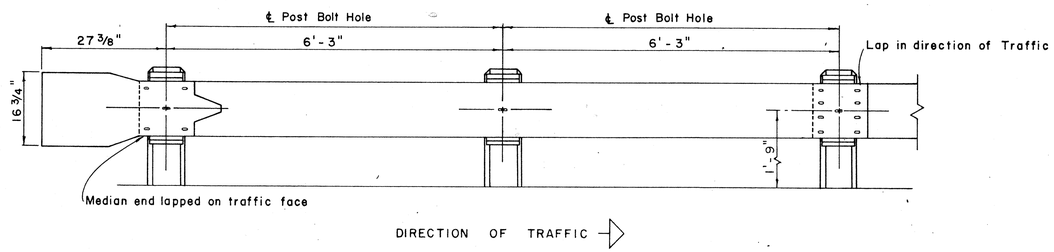

ELEVATION

METAL GUARD RAIL ON CONCRETE POSTS AND WOOD SPACER BLOCKS

Scale: ¾" = 1'-0"

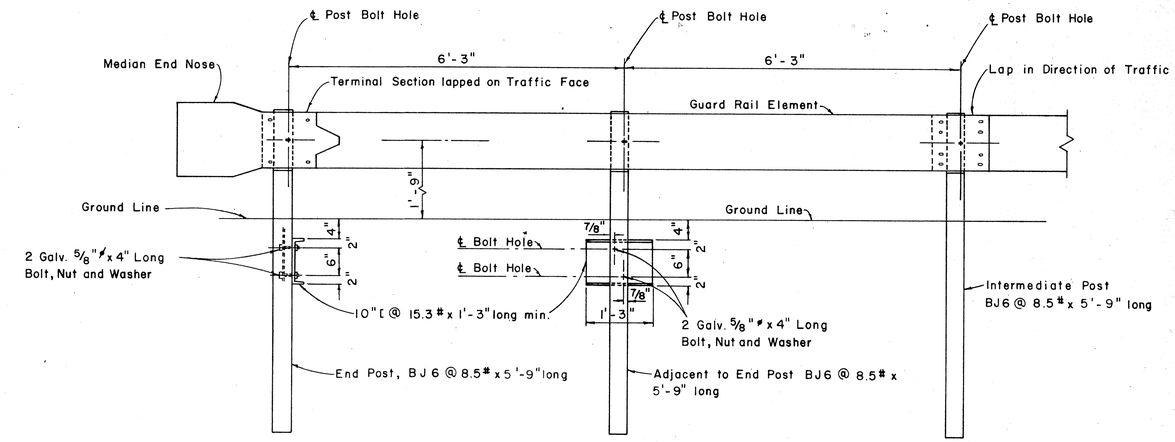

ELEVATION

METAL GUARD RAIL ON METAL POSTS AND METAL SPACER BLOCKS

Scale: ¾" = 1'-0"

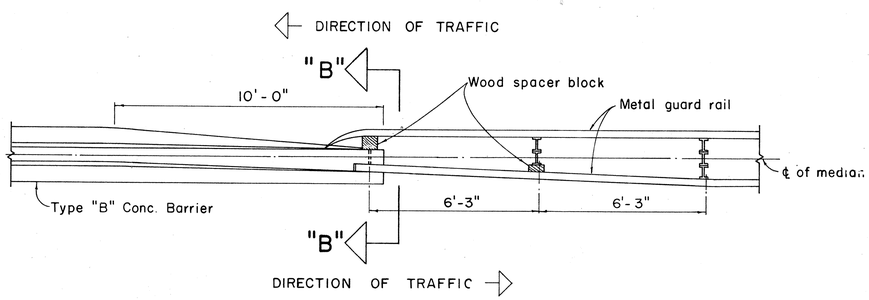

TYPE "B" CONCRETE BARRIER TO METAL GUARD RAIL

Scale: ⅜" = 1'-0"

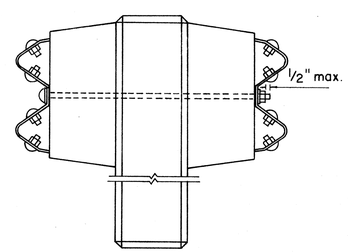

SECTION "A-A"

Scale: 1½" = 1'-0"

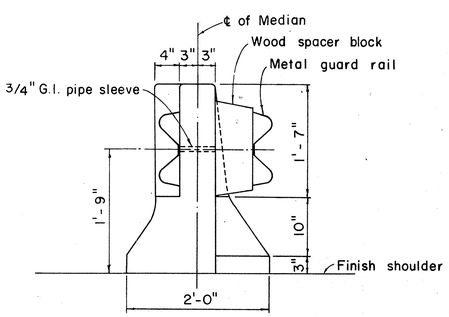

SECTION "B-B"

Scale: 1" = 1'-0"

REVISED: October 25, 1967
REVISED: August 10, 1967

STATE OF HAWAII
DEPARTMENT OF TRANSPORTATION
HIGHWAYS DIVISION

STANDARD DETAILS

METAL GUARD RAIL

KAMEHAMEHA HWY. WIDENING
PROJECT NO. F-090-1(14)

SHEET No. 5 OF 10 SHEETS

ORIGINAL PLAN	SURVEY PLOTTED BY	DATE
	DRAWN BY	
	TRACED BY	
NOTE BOOK	DESIGNED BY	
	QUANTITIES BY	
No.	CHECKED BY	

PRINTED ON NO. 1000H CLEARPRINT

FED. ROAD DIST. NO.	STATE	FED. AID PROJ. NO.	FISCAL YEAR	SHEET NO.	TOTAL SHEETS
HAWAII	HAW.	F-090-1(14)	1968	17	24

BOLT DIMENSIONS

TYPE A BOLT	D	L
Splice Bolt	5/16"	1 1/4"
Post Bolt for Conc. Post w/ Double Wood Blocks	3/32"	24"
Post Bolt for Conc. Post w/ Single Wood Block	3/32"	18"
Rail Bolt for Metal Block	3/32"	2"

BOLT DIMENSIONS

TYPE B BOLT	L
Post Bolt for Conc. Post w/ Metal Blocks	9 1/2"
Post Bolt for Metal Post w/ Metal Block	1 3/4"

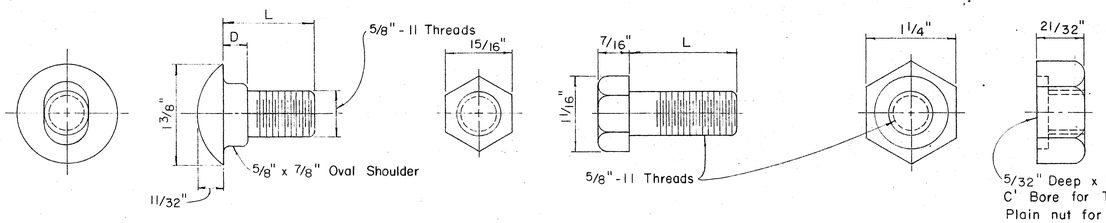

TYPE A BOLT

TYPE B BOLT

HEXAGON NUT

Scale: Full Size

SPLICE RAIL AND POST BOLTS

Scale Full Size

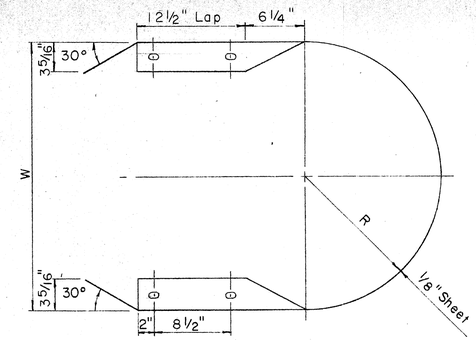

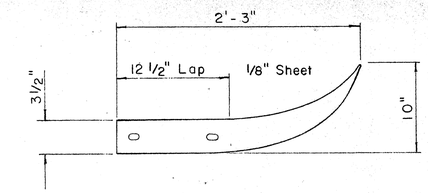

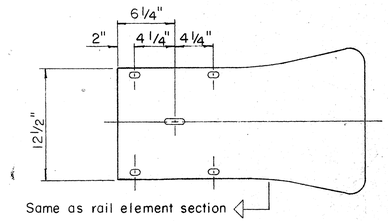

FLARED END

Scale: 1 1/2" = 1' - 0"

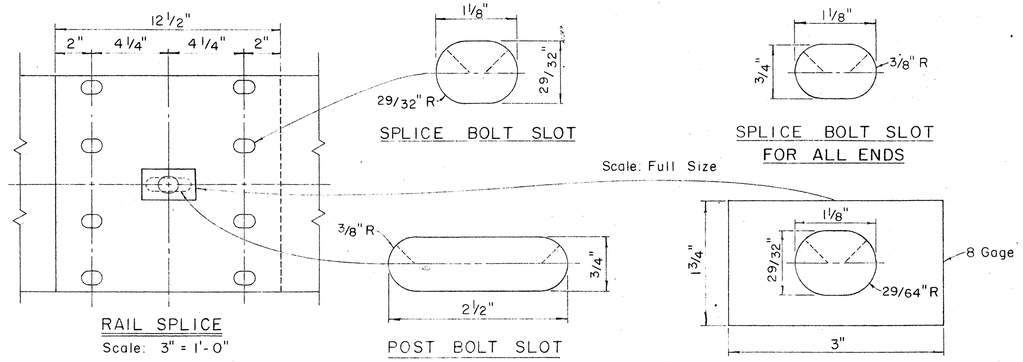

RAIL SPLICE

Scale: 3" = 1'-0"

SPLICE BOLT SLOT

POST BOLT SLOT

Scale: Full Size

SPLICE BOLT SLOT FOR ALL ENDS

RAIL WASHER

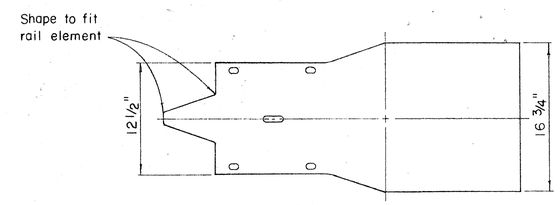

MEDIAN END

Scale 1 1/2" = 1'-0"

MEDIAN END DIMENSIONS

TYPE OF POST AND BLOCK	W	R
Double Metal Guard Rail on Concrete Post with Wood Blocks	29 3/4"	14 7/8"
Double Metal Guard Rail on Concrete Post with Metal Blocks (BJ6)	26 1/2"	13 1/4"
Double Metal Guard Rail on Metal Post with Metal Blocks (BJ6)	24 3/8"	12 3/16"

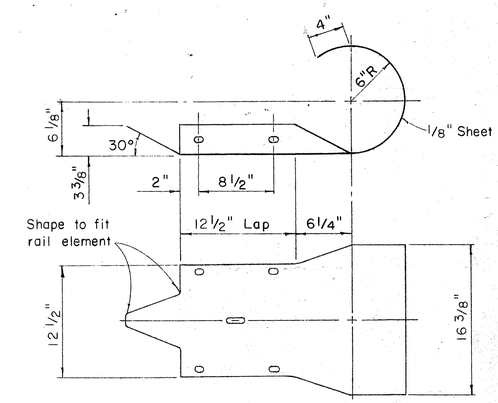

CURVED END

Scale: 1 1/2" = 1'-0"

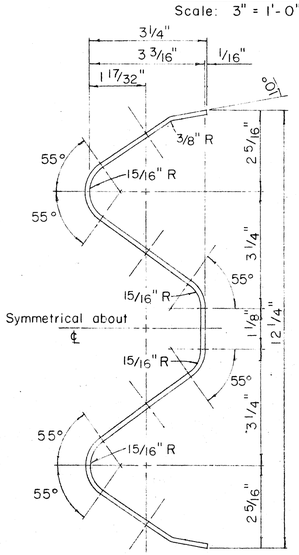

RAIL ELEMENT SECTION

Scale: 6" = 1'-0"

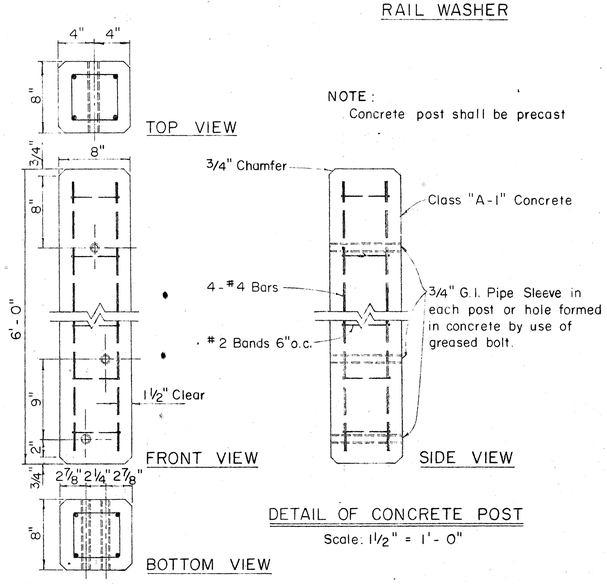

TOP VIEW

FRONT VIEW

BOTTOM VIEW

SIDE VIEW

NOTE:
Concrete post shall be precast

DETAIL OF CONCRETE POST

Scale: 1 1/2" = 1'-0"

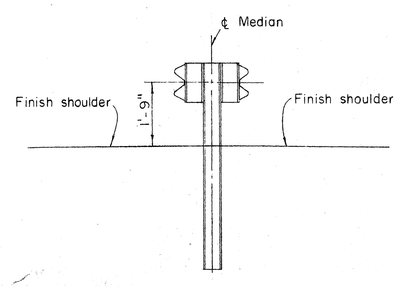

AT TANGENT SECTION

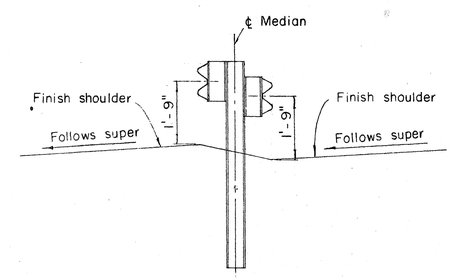

AT SUPER SECTION

TYPICAL MEDIAN GUARD RAIL DETAIL

Scale: 1/2" = 1'-0"

REVISED: Oct. 27, 1967
REVISED: Sept. 1, 1967
REVISED: June 2, 1967

STATE OF HAWAII
DEPARTMENT OF TRANSPORTATION
HIGHWAYS DIVISION

STANDARD DETAILS

METAL GUARD RAIL

KAMEHAMEHA HWY. WIDENING
PROJECT NO. F-090-1(14)
Scale: as noted

SHEET No. 6 OF 10 SHEETS

ORIGINAL PLANS	SURVEY PLOTTED BY	DATE
	DRAWN BY	" " "
	TRACED BY	" " "
NOTE BOOK	DESIGNED BY	" " "
	QUANTITIES BY	" " "
No.	CHECKED BY	" " "

PRINTED ON NO. 1000H CLEARPRINT

FED. ROAD DIST. NO.	STATE	FED. AID PROJ. NO.	FISCAL YEAR	SHEET NO.	TOTAL SHEETS
HAWAII	HAW.	F-070-1(14)	1968	18	24

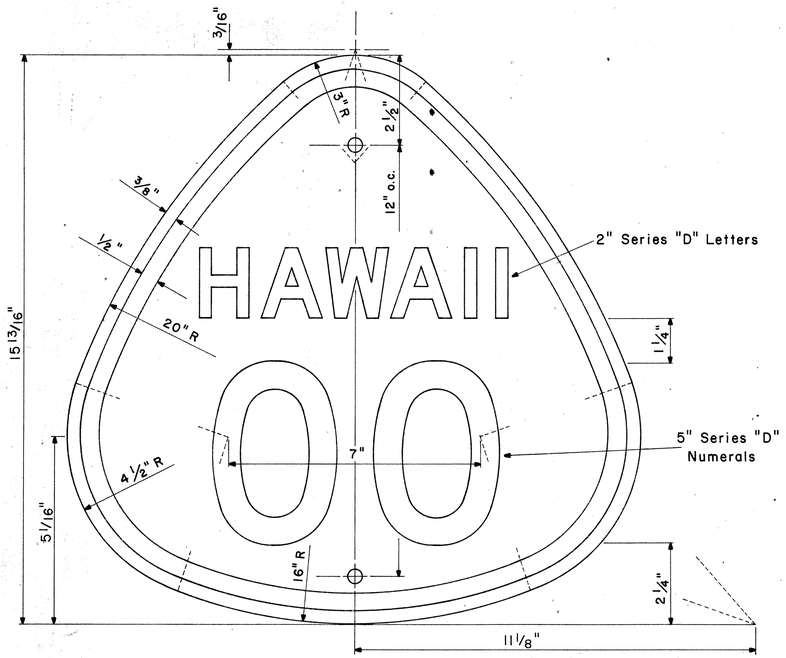

STATE ROUTE MARKER
M1-3(00)

Scale: 1/2" = 1"

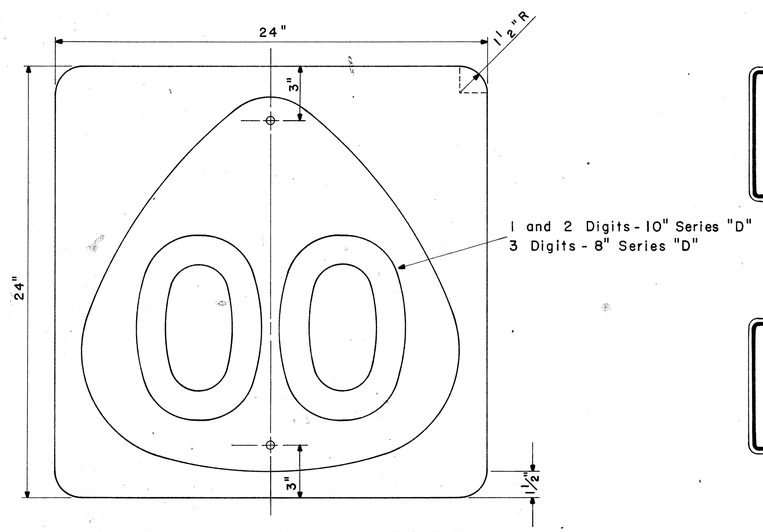

STATE ROUTE MARKER
M1-4(00)

Scale: 1/4" = 1"

NOTE:
Multiply all dimensions of State Route Marker M1-3 by 1.3 for the dimensions of the shield for M1-4.

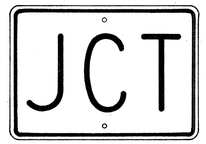

M2-1
21" x 15"

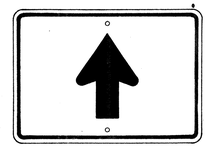

M4-3
21" x 15"

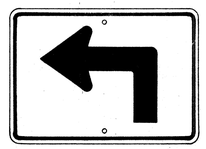

M3-1-L
* M3-1-R
21" x 15"

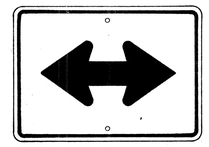

M4-4
21" x 15"

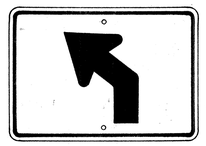

M3-2-L
* M3-2-R
21" x 15"

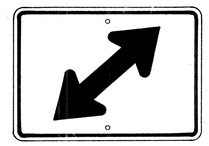

M4-5-R
* M4-5-L
21" x 15"

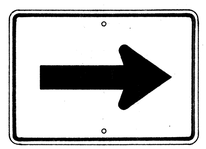

M4-1
21" x 15"

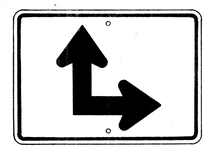

M4-6-R
* M4-6-L
21" x 15"

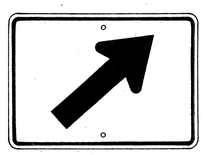

M4-2-R
* M4-2-L
21" x 15"

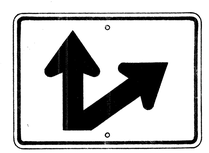

M4-7-R
* M4-7-L
21" x 15"

AUXILIARY MARKERS

Scale: 1/8" = 1"

* NOTE:
Signs shall be similar but opposite in direction.

M5-1
21" x 9"

M5-2
21" x 9"

M5-3
21" x 9"

M5-4
21" x 9"

M5-5
21" x 9"

M5-6
21" x 9"

M6-1-N
21" x 9"
(See Note 6)

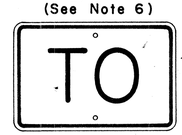

M7-1
18" x 12"

GENERAL NOTES

1. The shape, color, dimensions, symbols, wording, lettering and reflectorizing of all signs shall be in accordance with the "Manual on Uniform Traffic Control Devices for Streets and Highways," dated June 1961 and the BPR manual "Standard Highway Signs," dated September 1961, unless otherwise specified.
2. All letters and figures shall conform to the manual "Standard Alphabets for Highway Signs," Dept. of Commerce, Bureau of Public Roads, 1952.
3. All markers shall be reflectorized unless otherwise specified.
4. All markers shall have 3/8" bolt holes drilled at appropriate locations unless otherwise specified.
5. All markers shall have a black legend on a white background unless otherwise specified.
6. Sign message of Cardinal Direction Marker (M6-1) shall be denoted by the following suffixes:
   - M6-1-N : NORTH
   - M6-1-E : EAST
   - M6-1-S : SOUTH
   - M6-1-W : WEST
7. Auxiliary markers denoted with the suffix "I": (M4-1-I) shall have a white legend on a blue background.
8. Cardinal Direction Marker (M6-1) with suffix I(3) shall have a white legend on a blue background and shall be 30" x 15" in size.
9. For M1-3 and M1-4 signs, number in ( ) indicates route number and shall be as shown on the plan.

ORIGINAL PLAN		DATE
	SURVEY PLOTTED BY	
	DRAWN BY	
	TRACED BY	
NOTE BOOK	DESIGNED BY	
	QUANTITIES BY	
No.	CHECKED BY	

STATE OF HAWAII
DEPARTMENT OF TRANSPORTATION
HIGHWAYS DIVISION

STANDARD DETAILS
STATE ROUTE MARKERS
AND
AUXILIARY MARKERS

Scale: As Noted

SHEET Nº 7 OF 10 SHEETS

18

LIETZ 1103 ARKWRIGHT TRACING CLOTH 10-60 200R

FED. ROAD DIST. NO.	STATE	FED. AID PROJ. NO.	FISCAL YEAR	SHEET NO.	TOTAL SHEETS
HAWAII	HAW.	F-090-1(14)	1968	19	24

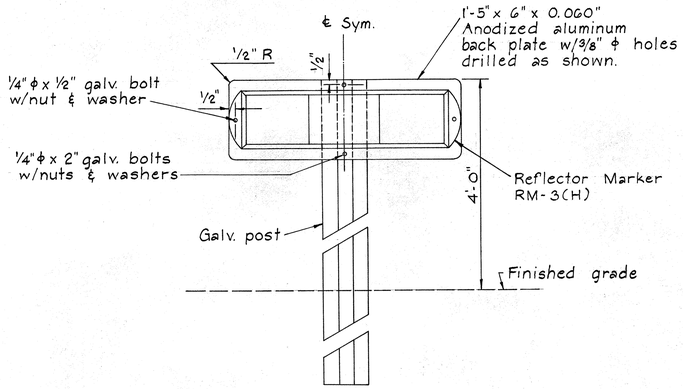

TYPICAL DETAIL
HORIZONTAL REFLECTOR MARKER
Not to scale

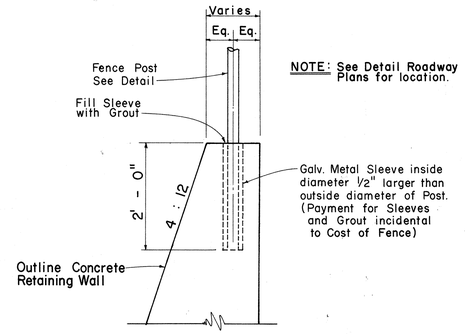

NOTE: See Detail Roadway Plans for location.

TYPICAL SECTION OF FENCE POST
ON CONCRETE RETAINING WALL
Scale: 3/4" = 1'-0"

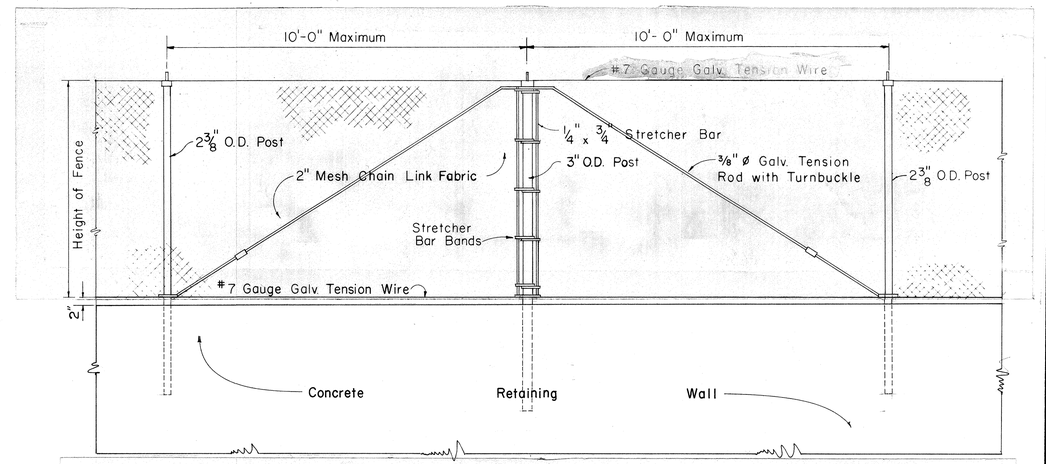

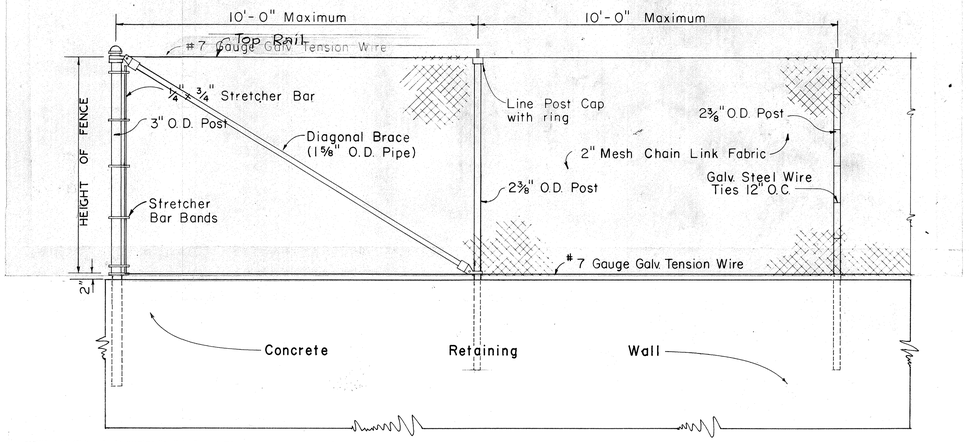

NOTE: O.D. refers to outside diameter.

CHAIN LINK FENCE DETAILS
Scale 1/2" = 1'-0"

R1-1 30" x 30"

R3-5(L) 30" x 36"

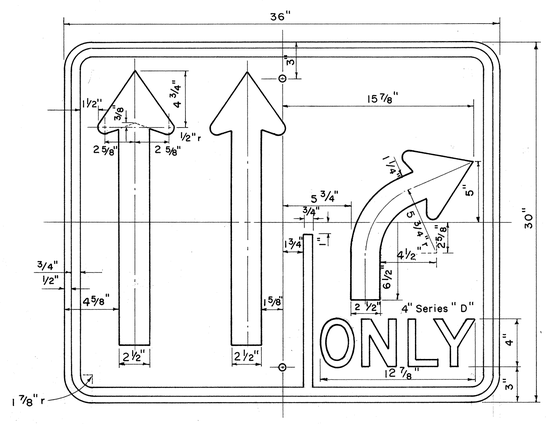

R3-8A(R)

NOTE:

1. The shape, color, dimensions, symbols, wording, lettering and reflectorization of all signs shall be in accordance with the "Manual on Uniform Traffic Control Devices for Streets and Highways," dated June 1961 and the BPR manual "Standard Highway Signs," dated September 1961 unless otherwise specified.
2. All regulatory signs shall be reflectorized unless otherwise specified.
3. All regulatory signs shall have 3/8" bolt holes drilled at appropriate locations unless otherwise noted.
4. (R) or (L) indicates right or left and shall be as shown on the plans.

NOTES:

New Fence shall conform to Chain Link Fence Details and Special Provisions except for the following:

1. The height of the Fence shall be 7'-0".
2. The Fence shall be topped with "A" shaped extension arms and barbed wire conforming to the existing.
3. All materials used for the Fence shall be new. Existing Fence materials shall be neatly stockpiled as directed by the Engineer.

STATE OF HAWAII
DEPARTMENT OF TRANSPORTATION
HIGHWAYS DIVISION

MISCELLANEOUS DETAILS

KAMEHAMEHA HWY. WIDENING
PROJECT NO. F-090-1(14)

SHEET No. 8 OF 10 SHEETS

ORIGINAL PLAN	SURVEY PLOTTED BY	DATE
	DRAWN BY	" "
	TRACED BY	" "
NOTE BOOK	DESIGNED BY	" "
	QUANTITIES BY	
No.	CHECKED BY	

PRINTED ON NO. 1000H CLEARPRINT

FED. ROAD DIST. NO.	STATE	FED. AID PROJ. NO.	FISCAL YEAR	SHEET NO.	TOTAL SHEETS
HAWAII	HAW.	F-090-1(14)	1968	20	24

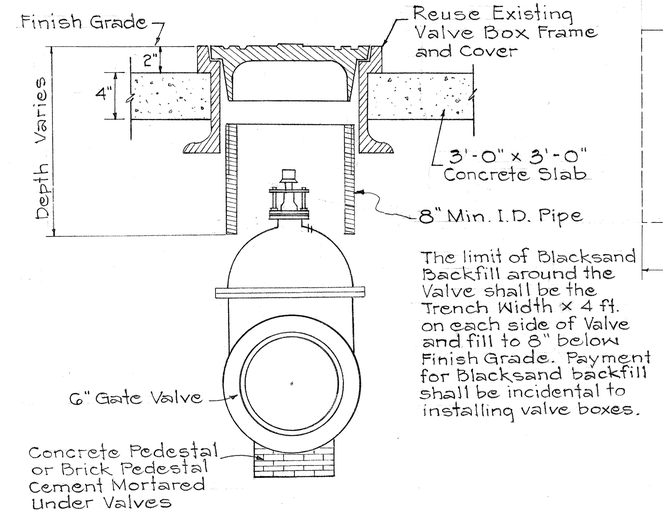

The limit of Blacksand Backfill around the Valve shall be the Trench Width x 4 ft. on each side of Valve and fill to 8" below Finish Grade. Payment for Blacksand backfill shall be incidental to installing valve boxes.

INSTALLATION OF VALVE BOX FOR GATE VALVE

Not To Scale

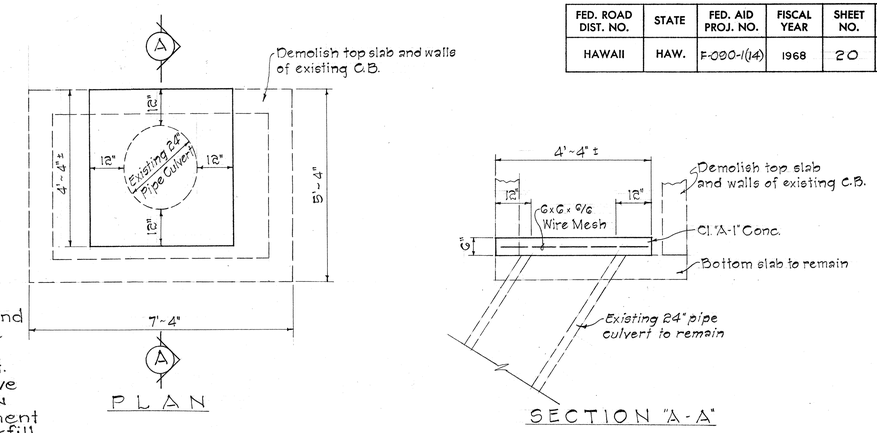

DETAIL OF CONCRETE SEAL

Scale: 1/2" = 1'-0"

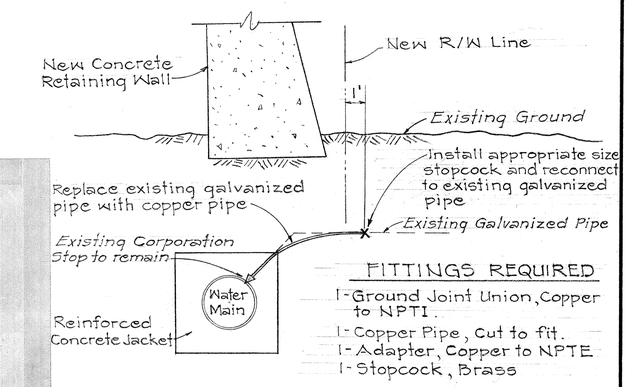

FITTINGS REQUIRED

1-Ground Joint Union, Copper to NPTI.
1-Copper Pipe, Cut to fit.
1-Adapter, Copper to NPTE
1-Stopcock, Brass

DETAIL OF ADJUSTMENT TO EXISTING GALVANIZED SERVICE PIPE CONNECTION AT CONCRETE JACKET

NOT TO SCALE

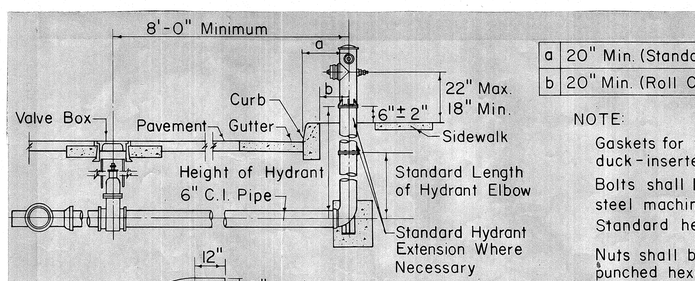

a	20" Min. (Standard Curb)
b	20" Min. (Roll Curb)

NOTE:

Gaskets for flanged joints shall be 1/16 inch duck-inserted rubber packing Garlock No. 19.

Bolts shall be 5/8" diameter x 2 3/4" long steel machine bolts with cut threads, American Standard heavy hexagon heads, galvanized.

Nuts shall be American Standard heavy cold punched hexagon nuts, galvanized.

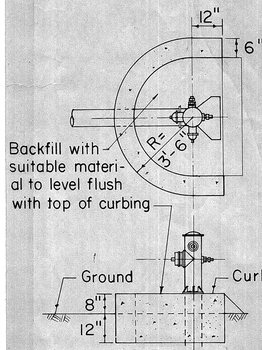

DETAIL OF CURBING AT HYDRANT WHERE REQUIRED

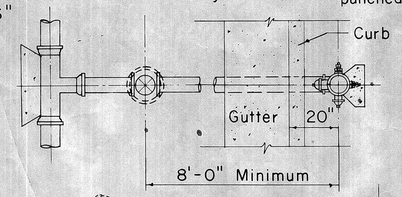

LAYOUT NO. 1

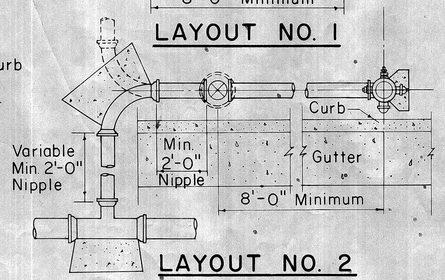

LAYOUT NO. 2

STANDARD LENGTHS FOR HYDRANT ELBOWS
30"
36"
42"
48"

Standard Hydrant Extensions are available in the following Lengths:

6 to 30 inches long in increments of 6 inches

STANDARD FIRE HYDRANT LAYOUT

APPROVED:

COMMANDER, PACIFIC DIVISION, NAVY FACILITIES, ENGINEERING COMMAND

1/5/68
DATE

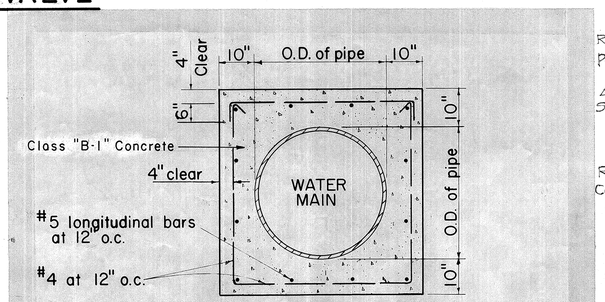

SECTION B

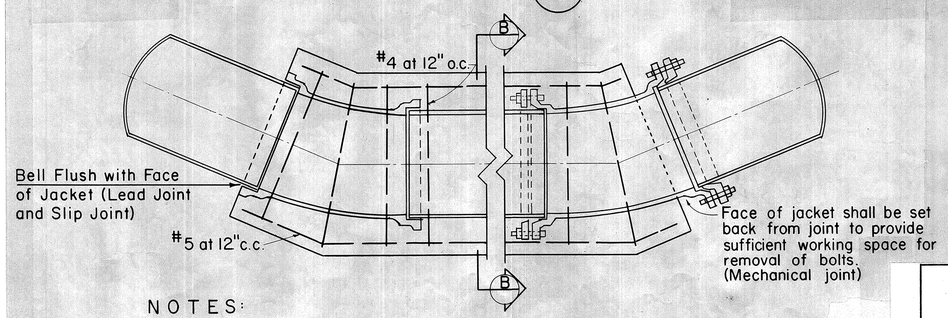

NOTES:

1. Jacket to be poured after completion of test.
2. 2 1/2" depth of lead for lead joint pipe required at all embedded joints.
3. Wherever construction joints are required, 6" rubber or neoprene waterstops shall be installed. Waterstops shall be of the type specified and manufactured by the Servicized Products Corporation, Gate Rubber Company or approved equal.

REINFORCED CONCRETE JACKET

Scale: Not to Scale

NOTE:

If any galvanized service lines are found connected to existing main which will be wrapped with new concrete jacket, the galvanized service line shall be replaced by copper line as shown before concrete jacket is poured. This work including furnishing of all materials shall be considered incidental to item of "Class B-1 Concrete Other than in Bridges".

STATE OF HAWAII
DEPARTMENT OF TRANSPORTATION
HIGHWAYS DIVISION

MISCELLANEOUS AND STANDARD DETAILS

KAMEHAMEHA HWY. WIDENING
F.A. PROJ. NO. F-090-1(14)

DATE: AUGUST, 1967

SHEET No. 9 OF 10 SHEETS

ORIGINAL PLAN | NOTE BOOK No. | SURVEY PLOTTED BY | TRACED BY | DESIGNED BY | QUANTITIES BY | CHECKED BY | DATE

PRINTED ON NO. 1000H CLEARPRINT

20

FED. ROAD DIST. NO.	STATE	FED. AID PROJ. NO.	FISCAL YEAR	SHEET NO.	TOTAL SHEETS
HAWAII	HAW.	F-090-1(14)	1968	21	24

Revision
Jan. '67
Feb. '67
Apr. '67

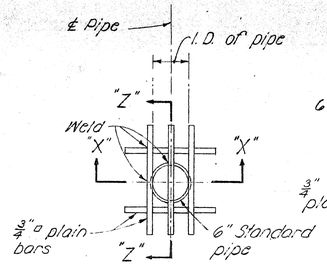

PLAN

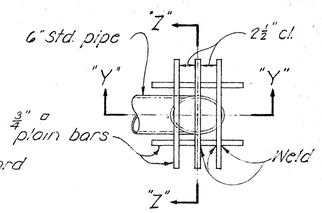

PLAN

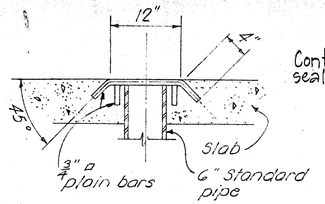

SECTION "Z-Z"

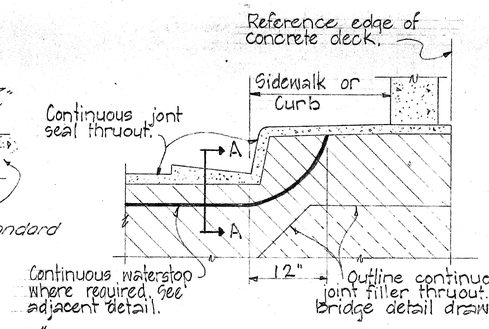

ELEVATION

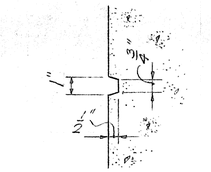

END POST GROOVE DETAIL
Scale: 3"=1'-0"

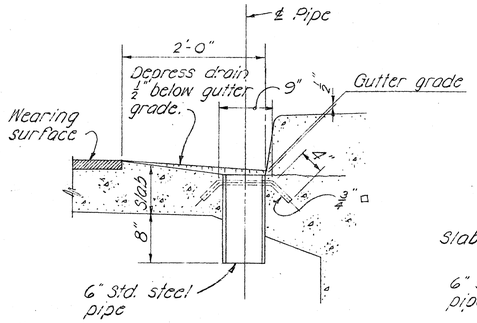

SECTION "X-X"

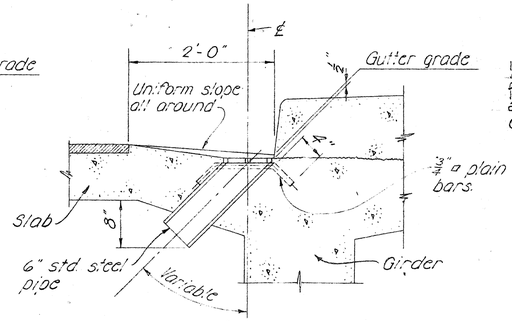

SECTION "Y-Y"

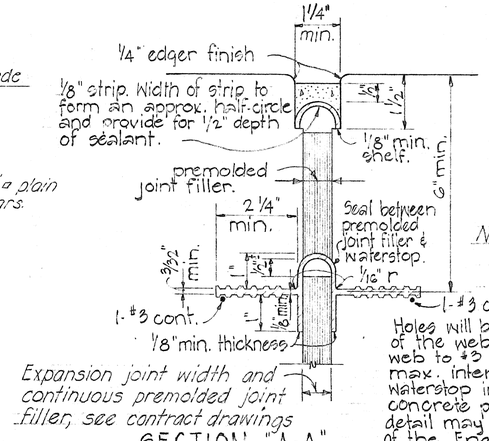

SECTION "A-A"

Waterstop to have 5 or more pairs of raised ribs to provide 0.1 sq. in. min. rib cross-section area on each half of the waterstop. Height of ribs to be 3/32" min.

Nailing Strip:
Nail or staple to form or premolded joint filler.

Holes will be permitted in the outer 1/2" of the web for wires, rings, etc. Tie web to #3 reinforcing bars at 12" max. intervals to support the waterstop in proper position during concrete placement. Alternative detail may be submitted for approval of the Engineer.

TYPICAL EXPANSION JOINT DETAIL

GENERAL NOTES

1. The Contractor shall verify the location of all existing utility lines and notify the respective owners before commencing work of excavation.
2. All concrete shall be Class A-1 unless otherwise noted.
3. Clearance for reinforcing bars shall be as follows, unless otherwise noted:
   a. - 1 1/2" For stirrups of beams & pier caps.
   b. - 2" For ties of columns
   c. - 2" For formed walls.
   d. - 3" For footings.
4. Concrete seats receiving steel plates, lead plates or neoprene pads shall be poured monolithically with supporting structures & top surfaces of the concrete seats shall be finished with a steel trowel to a smooth level at the elevation shown on the plans.
5. Reinforcing shall be detailed in accordance with A.C.I. Manual of Standard Practice for Detailing Reinforced Concrete Highway Structures unless otherwise noted.
6. Reinforcing bars shall be securely tied at all intersections & lap splices & shall be held in place during pouring to maintain their proper locations as shown on plans.
7. Splices of reinforcing - See Special Provisions.
8. Minimum spacing between parallel bars shall be 2 1/2 times the diameter of bars, but in no case shall the clear distance between the bars be 1 1/2 times the maximum size of the coarse aggregate.
9. All dimensions relating to reinforcing are to centers of bars unless otherwise noted.
10. Forms for all exposed surfaces of separation structures and surfaces of retaining walls visible from a traveled way or from a populated area shall be plywood except that metal forms may be permitted provided a surface finish satisfactory to the Engineer can be obtained and the use of such forms is approved in writing by the Engineer. Forms for round columns shall be made of materials that will give a smooth finish and true dimensions as given in the plans. Forms for prestressed concrete members shall be either metal or plywood.
11. Vertical column bars shall be arranged in such a manner as to miss pier cap bars above as directed by the Engineer.
12. Except as otherwise noted on drawings, all exterior corners & re-entrant angles in concrete work shall be chamfered 3/4" x 3/4". See Standard Specifications.
13. Concrete Finish - See Special Provisions.
14. All welders and welding procedures shall be qualified according to the requirements of the Special Provisions.
15. Elastomeric pads: Top & bottom of bridge bearing pads shall be secured against displacement, with adhesives approved by the Engineer. Pads shall be incidental to concrete and will not be paid for seperately.
16. Gothic letters and figures approximating dimensions shown will be acceptable if approved by the Engineer.

NOTE:
Metal drains shall be considered incidental to Class A-1 Concrete in both concrete and steel bridges and will not be paid for separately.
Assemblage of grillage and pipe shall be hot-dip galvanized after all welding is completed.

TYPICAL DRAINAGE DETAILS

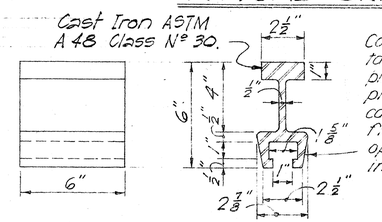

Contractor to take proper precautions to prevent the concrete from flowing into the opening of the inserts.

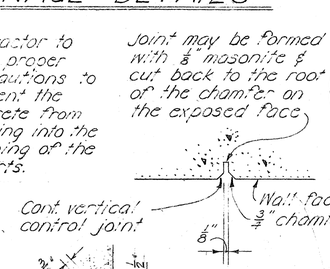

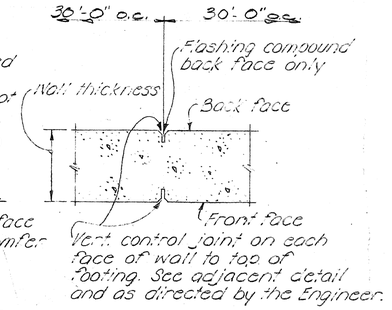

CONTROL JOINT DETAIL

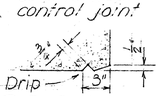

DRIP DET.

INSERT DETAIL

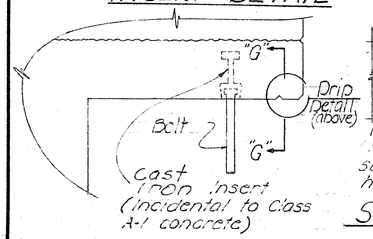

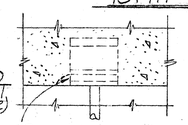

Provide opening of sufficient size to insert head of bolt.

SECTION "G-G"

DETAIL of PIPE HANGERS & INSERTS

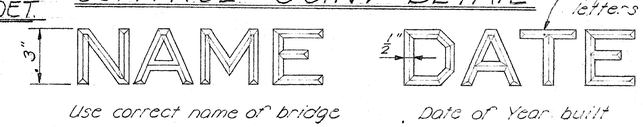

NOTE: Refer to corresponding detail drawings for placement of such names & dates at end post.
Exact details & spacing of letters & figures shall be as directed by the Engineer. See Note #16.

TYPICAL DETAIL OF LETTERS & FIGURES AT CONCRETE END POST

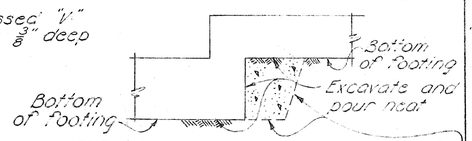

NOTE: In case of over excavation, the contractor shall backfill this area with minimum class D-1 concrete at his own expense.

TYPICAL EXCAVATION FOR CONTINUOUS FOOTING STEP-UP

STATE OF HAWAII
DEPARTMENT OF TRANSPORTATION
HIGHWAYS DIVISION

STANDARD BRIDGE DETAILS

KAMEHAMEHA HWY. WIDENING
PROJECT NO. F-090-1(14)

SHEET No. 10 OF 10 SHEETS

ORIGINAL PLAN	SURVEY PLOTTED BY	DATE
	DRAWN BY	
	TRACED BY	
	DESIGNED BY	
NOTE BOOK	QUANTITIES BY	
No.	CHECKED BY	

PRINTED ON NO. 1000H CLEARPRINT