FED. ROAD DIST. NO.	STATE	FED. AID PROJ. NO.	FISCAL YEAR	SHEET NO.	TOTAL SHEETS
HAWAII	HAW	F-090-1(4)	1964	105	177
		SU-0720(6)			

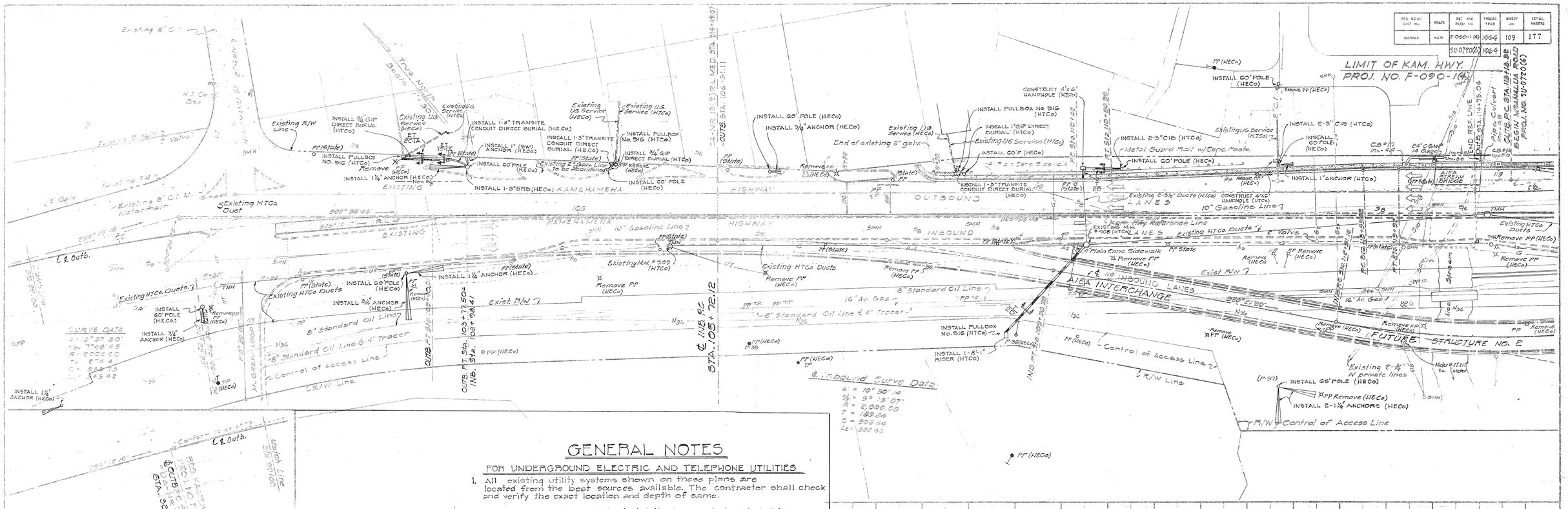

GENERAL NOTES

FOR UNDERGROUND ELECTRIC AND TELEPHONE UTILITIES

1. All existing utility systems shown on these plans are located from the best sources available. The contractor shall check and verify the exact location and depth of same.
2. All ducts and conduits called for installation in concrete jacket shall be inspected and approved by the respective Engineer of H.E.Co. or H.T.Co. before concrete placing. 24 hr. (Min.) notice shall be given before placing concrete.
3. The contractor shall notify each affected property owners at least one week in advance as to the time and duration for the trenching and installing of underground electric and telephone services.

   All trees, shrubbery, fences, lawn, etc. disturbed in the process of performing work on electric and telephone service lines in affected properties shall be restored to the original conditions by the contractor. Such restoration work will not be paid for separately, but shall be considered as incidental to the various contract items for the relocation of electric and telephone systems.
4. Where G.I. Conduits Direct Burial are to be installed through retaining walls, provide standard weight G.I. Pipe Sleeves of appropriate size and of length which will extend at least 1'-0" beyond the faces of the retaining walls.
5. C & C conduits and pull boxes sharing trenches with H.E.Co. &/or H.T.Co. will be installed by C & C Street Lighting Division.
6. The State will stake out proposed duct lines, pole & anchor locations & H.E.Co. to check locations before contractor undertakes excavations.
7. Minimum depth of duct lines from finished grade to:
   (a) Top of concrete jacket where ducts are concrete encased = 2'-0" unless otherwise shown.
   (b) Top of ducts not encased in concrete (Direct Burial) = 1'-6"
   (c) Top of steel conduits (Direct Burial) = 1'-6"
8. Depth of all pullboxes, service boxes and H.E.Co. handholes and manholes to be determined in the field.
9. Depth of poles and anchor holes are taken from finished grade.
10. Installation of, and backfill for poles by H.E.Co. or H.T.Co.
11. Backfill of anchor holes by the contractor.
12. For pole setting depth data, see Sheet No. 112
13. Ducts encased in conc. jackets:
    (a) Normal distance from face of concrete jacket to all ducts to be 3" Minimum.
    (b) Clear distance of 1½" minimum between ducts of same Utility Co.
    (c) Clear distance of 3" minimum between H.E.Co. ducts and H.T.Co. ducts.
14. Adjustments to H.E.Co. manholes to be done by H.E.Co.
15. Adjust existing telephone manholes and manhole frame and covers within proposed roadway to fit new roadway finished grades.
16. Maintain a minimum of 30 lineal feet completed trench excavation ahead of duct line concreting operations, except at duct line terminations.
17. H.T.Co. No. 516 Pull Box similar to H.E.Co's 1'-6" x 3'-6" Concrete Service Box. See Sht. No. 112.

LEGEND

● P.P.	Existing Power Pole	—EC—	New Electric Duct-Duct Section Designation as noted on plans (See Duct Section Detail Sheet)
✱ P.P.	Existing Power Pole to be removed		
040' P	New Power Pole - Pole Length as noted		New H.E.Co. or H.T.Co Pull Box - Type as noted on plans.
● L.P.	Existing Lamp Pole		
o	New Lamp Pole	—TC—	New Telephone Duct - Duct Section Designation as noted on plans. (See Duct Section Detail Sheet)
◇	Existing Traffic Signal Standard		
Sw	Sidewalk Anchor		
—	Existing Anchors	—UT—	Existing Telephone Duct & M.H. to remain.
▬	New Anchors	—AS—	Existing U.S. Army Signal Corp Cable & M.H.
L.R.B.	Long Radius Bend (H.E.Co-GI., H.T.Co-CI)	—Gs—	Existing Sewer Line
S.R.B.	Standard Radius Bend (H.E.Co-GI., H.T.Co-CI)	—Ga—	Existing Honolulu Gas Co. Line
C.I.B.	Cast Iron Bend (H.T.Co.)	—Nw—	Existing Navy Water Line
H.E.Co	Hawaiian Electric Company	—NAT—	Existing Navy Aerial Telephone
H.T.Co.	Hawaiian Telephone Company	—Nsw—	Existing Sewer Line
G.I.P.	Galvanized Iron Pipe	—AT—	Existing H.T.Co (Aerial)
P.B.	Pull Box	—NUT—	Existing Underground Telephone
H.H.	Hand Hole		
S.M.H.	Sewer Manhole		
T.M.H.	Telephone Manhole		
W.M.H.	Water Manhole		

APPROVED:

PRINC'PL DISTR. ENG'R, H.E.Co., LTD. — DATE 2/14/64

OUTSIDE PLANT ENGR. H.T.Co., LTD. — DATE 2-10-64

STATE OF HAWAII
DEPARTMENT OF TRANSPORTATION
HIGHWAYS DIVISION

UTILITIES

RELOCATION OF ELECTRIC AND TELEPHONE SYSTEMS

KAMEHAMEHA HIGHWAY — PROJ. No. F-090-1(4)
MOANALUA ROAD — PROJ. No. SU-0720(6)

SCALE: AS NOTED — DATE: Dec. 1963

SHEET No. 1 OF 15 SHEETS

105

FED. ROAD DIV. NO.	STATE	FED. AID PROJ. NO.	TOTAL SHEETS	SHEET NO.	
HAWAII	HAWAII	F-090-1(4)	1964	106	177
		SU-0720(6)	1964		

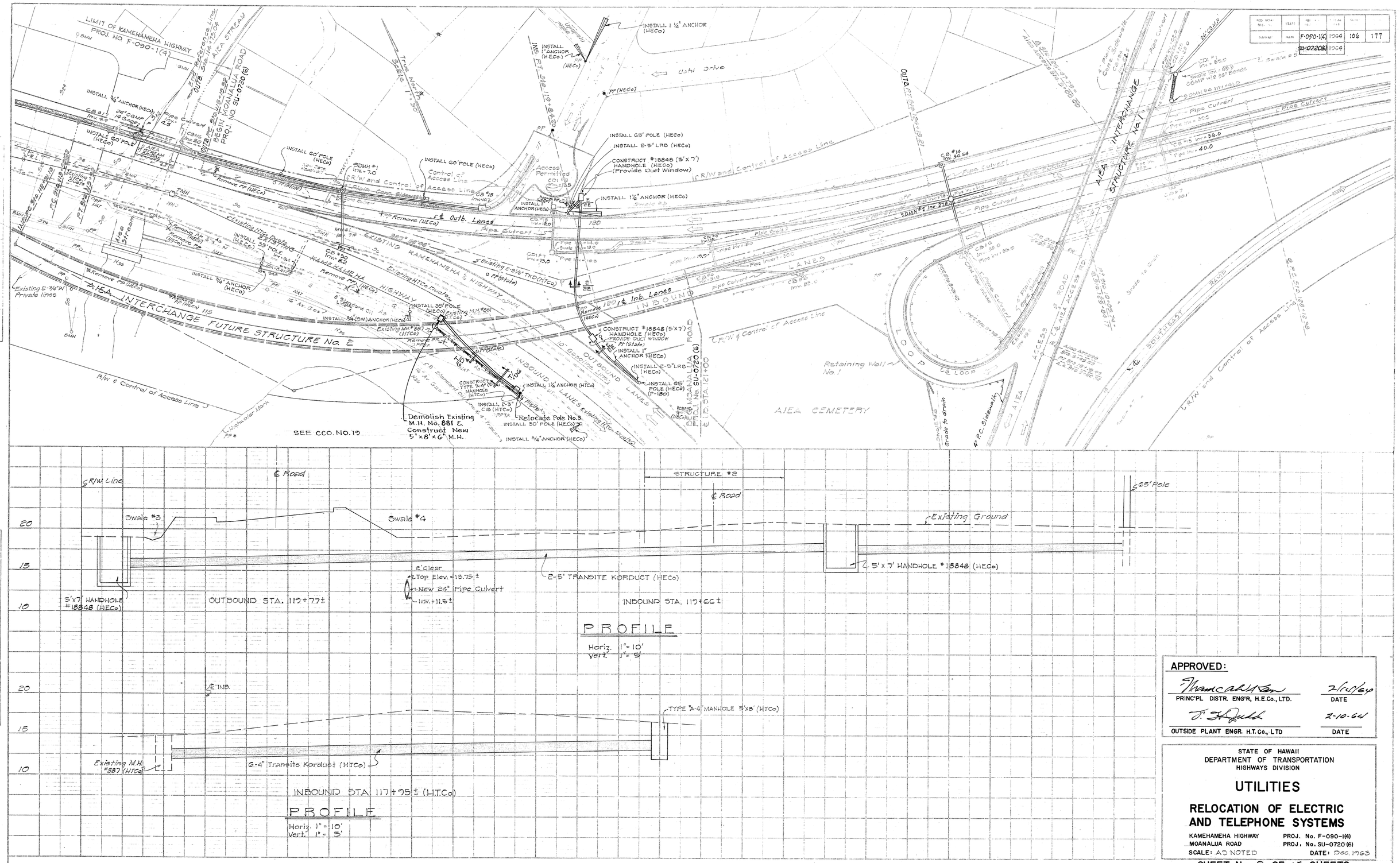

APPROVED:

Thomas A. Hatton — 2/10/64
PRINC'PL DISTR. ENG'R, H.E.Co., LTD. — DATE

T. H. Judd — 2-10-64
OUTSIDE PLANT ENGR. H.T. Co., LTD — DATE

STATE OF HAWAII
DEPARTMENT OF TRANSPORTATION
HIGHWAYS DIVISION

UTILITIES

RELOCATION OF ELECTRIC AND TELEPHONE SYSTEMS

KAMEHAMEHA HIGHWAY — PROJ. No. F-090-1(4)
MOANALUA ROAD — PROJ. No. SU-0720(6)
SCALE: AS NOTED — DATE: Dec. 1963

SHEET No. 2 OF 15 SHEETS

106

HAWAII	HAS	5U-0720(6)	1964	107	177

PLAN
SURVEYED
PLOTTED
ALIGNMENT CHECKED
RT OF WAY CHECKED
NOTE BOOK
NO.

PROFILE
SURVEYED
PLOTTED
GRADES CHECKED
B.M. & NOTES
STRUCTURE NOTAT'NS CHK'KD
NOTE BOOK
NO.

TRANSITE KORDUCTS (H.T.Co) ℄ STATION 133+12±

PROFILE

Horiz. 1" = 10'
Vert. 1" = 5'

APPROVED:

Hamilton Kan 2/4/64
PRINC'PL DISTR. ENG'R, H.E.Co., LTD. DATE

2-10-64
OUTSIDE PLANT ENGR. H.T.Co. LTD. DATE

STATE OF HAWAII
DEPARTMENT OF TRANSPORTATION
HIGHWAYS DIVISION

UTILITIES

RELOCATION OF ELECTRIC AND TELEPHONE SYSTEMS

MOANALUA ROAD PROJ. No. 5U-0720(6)
SCALE: AS NOTED DATE: Dec. 1963

SHEET No. 3 OF 15 SHEETS

105

HECo & HTCo

NOTE:
FOR ELECTRIC AND TELEPHONE DUCT LINES ALONG EXISTING KAM. HIGHWAY, SEE SHEET No. 109

FED. AID PROJ.		SHEET NO.	TOTAL SHEETS		
HAWAII		F-090-1(4)	10164	108	177
		SU-0720(6)	10164		

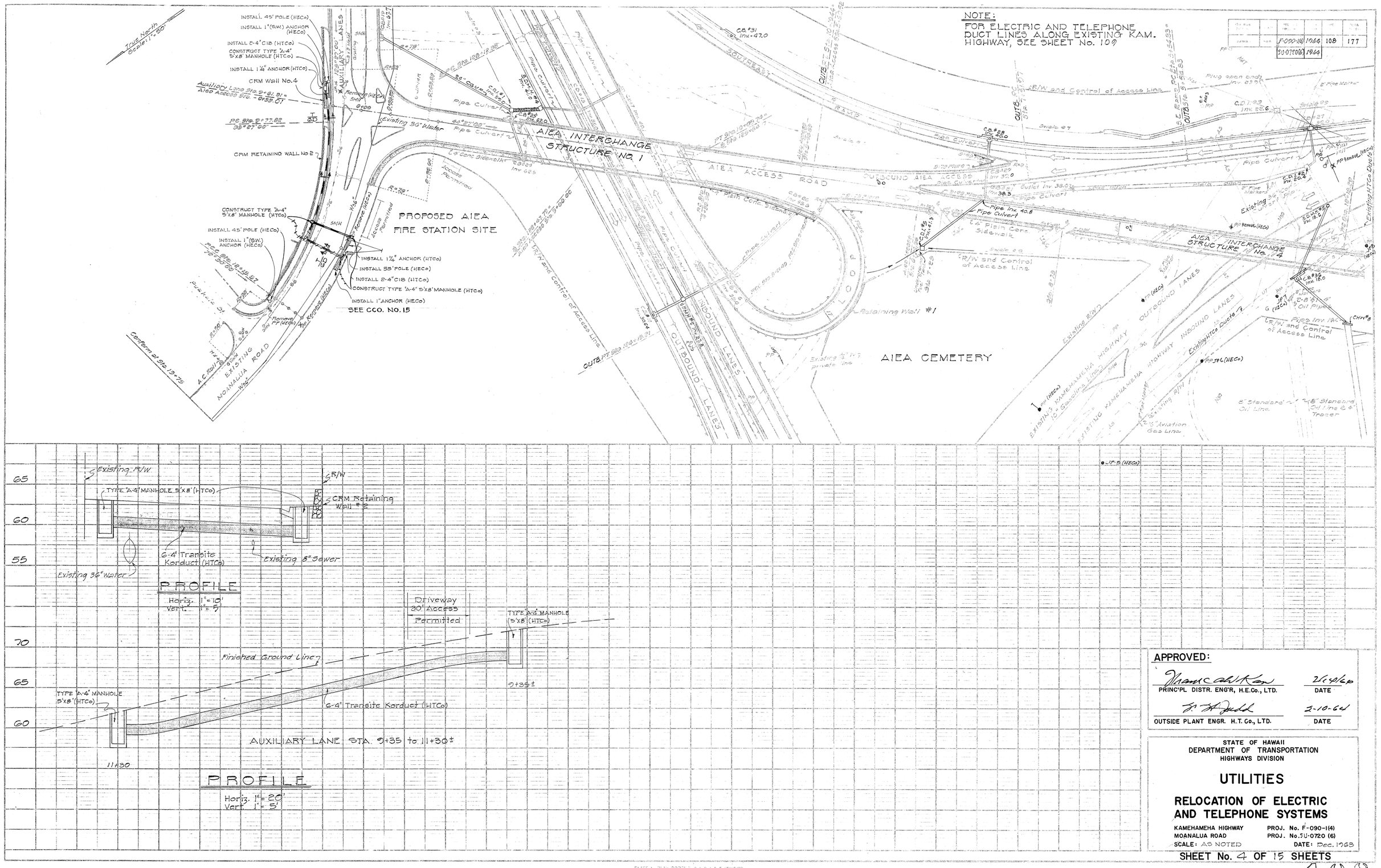

APPROVED:

PRINC'PL DISTR. ENG'R, H.E.Co., LTD. — DATE 2-10-64

OUTSIDE PLANT ENGR. H.T. Co., LTD. — DATE 2-10-64

STATE OF HAWAII
DEPARTMENT OF TRANSPORTATION
HIGHWAYS DIVISION

UTILITIES

RELOCATION OF ELECTRIC AND TELEPHONE SYSTEMS

KAMEHAMEHA HIGHWAY — PROJ. No. F-090-1(4)
MOANALUA ROAD — PROJ. No. SU-0720 (6)
SCALE: AS NOTED — DATE: Dec. 1963

SHEET No. 4 OF 15 SHEETS

108

HEL 4 of 17

		F-090-1(4)	1964	109	177
		SU-0720(6) 1964			

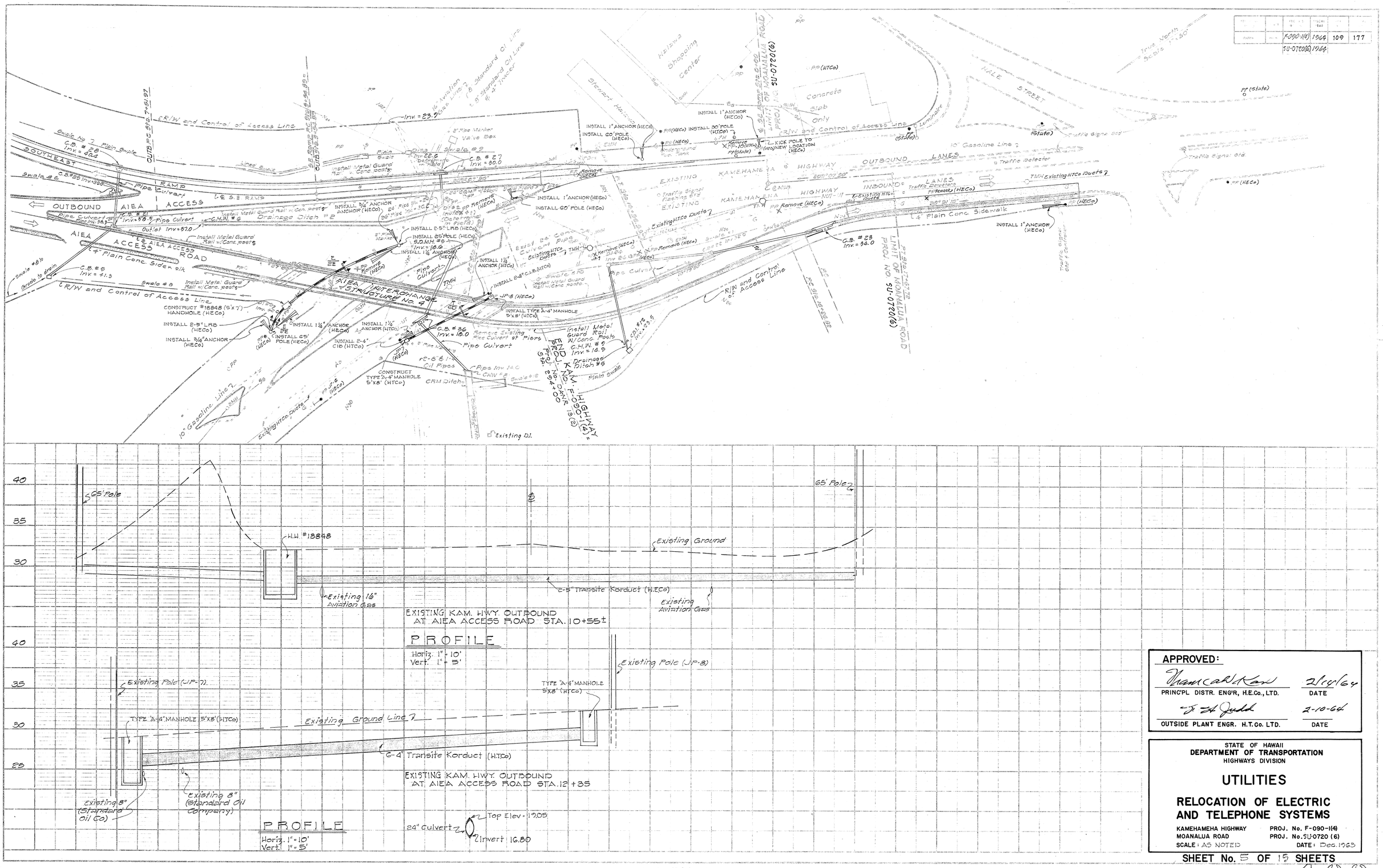

APPROVED:

PRINC'PL DISTR. ENG'R, H.E.Co., LTD. — DATE 2/19/64

OUTSIDE PLANT ENGR. H.T.Co. LTD. — DATE 2-10-64

STATE OF HAWAII
DEPARTMENT OF TRANSPORTATION
HIGHWAYS DIVISION

UTILITIES

RELOCATION OF ELECTRIC AND TELEPHONE SYSTEMS

KAMEHAMEHA HIGHWAY — PROJ. No. F-090-1(4)
MOANALUA ROAD — PROJ. No. SU-0720 (6)
SCALE: AS NOTED — DATE: Dec. 1963

SHEET No. 5 OF 15 SHEETS

109

HEL. & HTC

FED. ROAD DIST. NO.	STATE	FED. AID PROJ. NO.	FISCAL YEAR	SHEET NO.	TOTAL SHEETS
HAWAII	HAW.	F-090-1(4)	1964	110	177
		SU-0720(6)	1964		

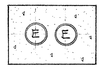

E / 2C

2-5" Transite Conduit (HECo)

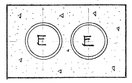

E / 2E

2-5" Transite Korduct (HECo)

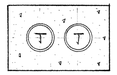

T / 2D

2-4" Transite Korduct (HTCo)

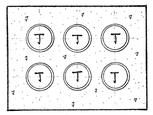

T / 6D

6-4" Transite Korduct (HTCo)

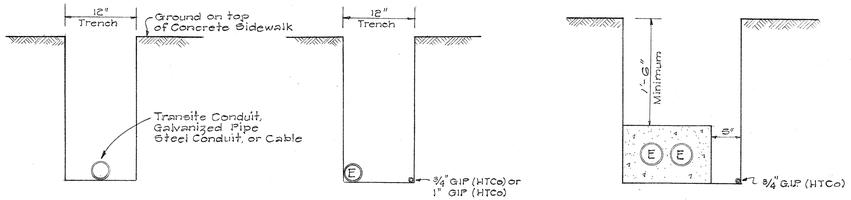

TYPICAL DETAIL OF TRENCH FOR DIRECT BURIAL DUCT

ET / 1C-1A or ET / 1C-1D

1-5" Transite Conduit (HECo)(Direct Burial)
1-3/4" Galv. Iron Pipe (HTCo)(Direct Burial)
or 1-1" Galv. Iron Pipe (HTCo)(Direct Burial)

ET / 2C-1A

2-5" Transite Conduit (HECo)
1-3/4" Galv. Iron Pipe (HTCo)(Direct Burial)

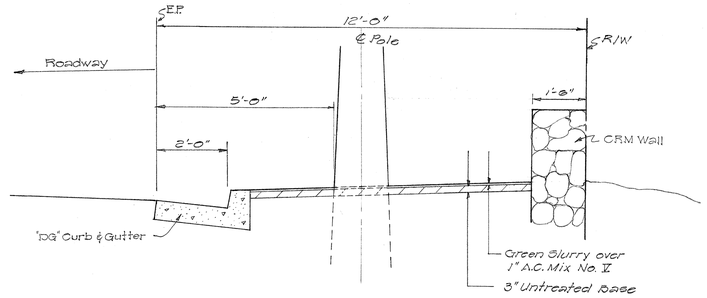

TYPICAL POLE OFFSET

Scale: 1/2" = 1'-0"

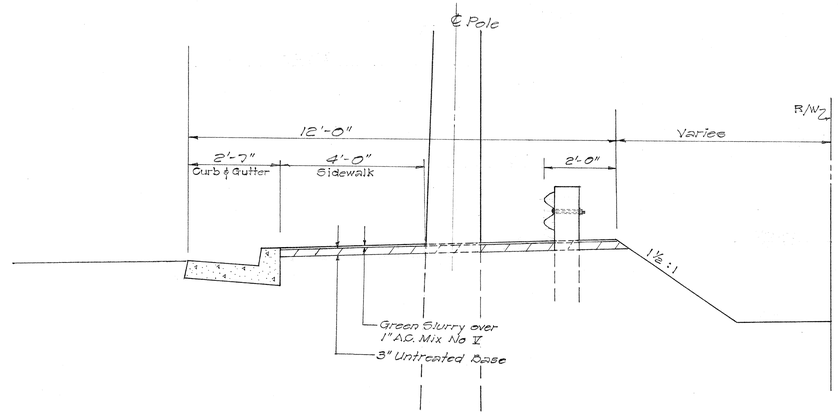

TYPICAL POLE OFFSET

Scale: 1/2" = 1'-0"

LEGEND FOR CONDUIT

CONDUIT SIZE	SYMBOL
3/4"	A
1"	B
3"	C
4"	D
5"	E

FOR 40' THRU 60' POLES WITH 1-1/4" x 10'-0" ANCHOR RODS			
"A" (Anchor Rod Eye to ℄ of Pole)	"B" (Anchor Rod Eye to ℄ of Hole)	"C" (Vertical Depth) 24" Deadman	"D" = ("A" + "B") (Total Distance - Pole to Hole)
5'-0"	1'-7"	9'-4"	6'-7"
10'-0"	3'-0"	9'-0"	13'-0"
15'-0"	4'-2"	8'-6"	19'-2"
20'-0"	5'-3"	7'-11"	25'-3"
25'-0"	6'-2"	7'-3"	31'-2"

ORIGINAL PLANS		DATE
	SURVEY PLOTTED BY	
	DRAWN BY	
	TRACED BY	" "
	DESIGNED BY	" "
NOTE BOOK	QUANTITIES BY	" "
	CHECKED BY	" "
No.		

APPROVED

Francis W. Kerr 2-10-64
PRINCPL. DISTR. ENGR. H.E.Co. LTD. DATE

F. H. Judd 2-10-64
OUTSIDE PLANT ENGR. H.T.Co. LTD. DATE

STATE OF HAWAII
DEPARTMENT OF TRANSPORTATION
HIGHWAYS DIVISION

TYPICAL DUCT SECTIONS AND TYPICAL POLE OFFSETS

MOANALUA ROAD — PROJ. No. SU-0720 (6)
KAMEHAMEHA HWY. — PROJ. No. F-090-1(4)

SCALE: AS NOTED — DATE: Dec. 1963

SHEET No. 6 OF 15 SHEETS

PRINTED ON CLEARPRINT 1000-H

110

FED. AID DIST. NO.	STATE	FED. AID PROJ. NO.	FISCAL YEAR	SHEET NO.	TOTAL SHEETS
HAWAII	HAWAII	F-090-1(4)	1966	111	177
		SU-0720(6)	1966		

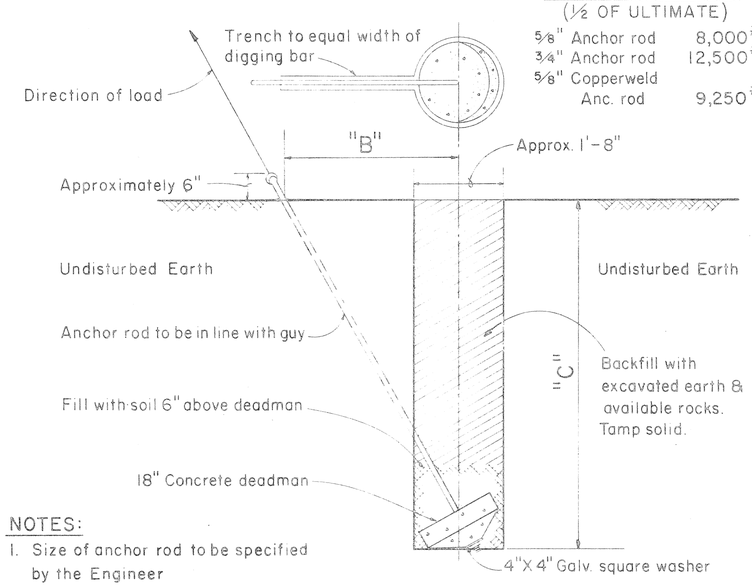

ALLOWABLE LOAD
(½ OF ULTIMATE)

5/8" Anchor rod	8,000#
3/4" Anchor rod	12,500#
5/8" Copperweld Anc. rod	9,250#

NOTES:
1. Size of anchor rod to be specified by the Engineer
2. Use Standard 05-101 Anchoring Data.

GUY ANCHOR 18" DEADMAN

Scale: 3/4" = 1' - 0"

05-102

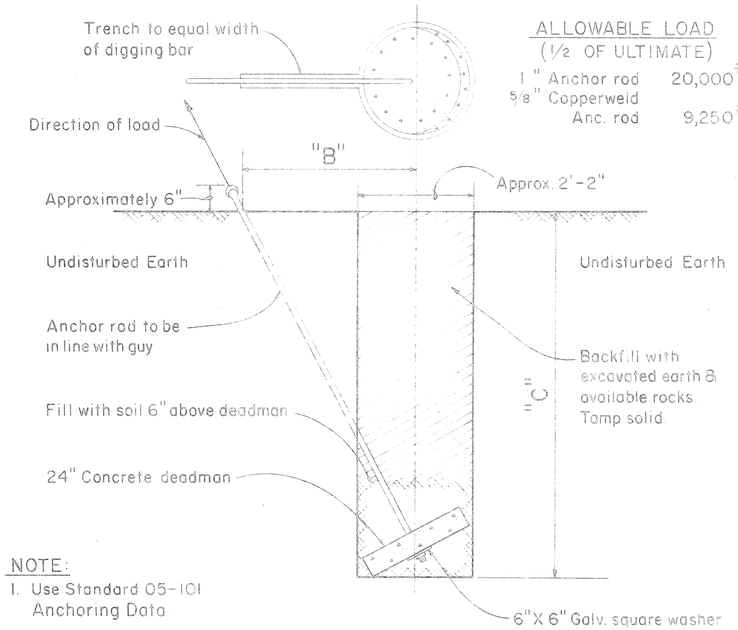

ALLOWABLE LOAD
(½ OF ULTIMATE)

1" Anchor rod	20,000#
5/8" Copperweld Anc. rod	9,250#

NOTE:
1. Use Standard 05-101 Anchoring Data.

GUY ANCHOR 24" DEADMAN

Scale: 3/4" = 1' - 0"

05-103

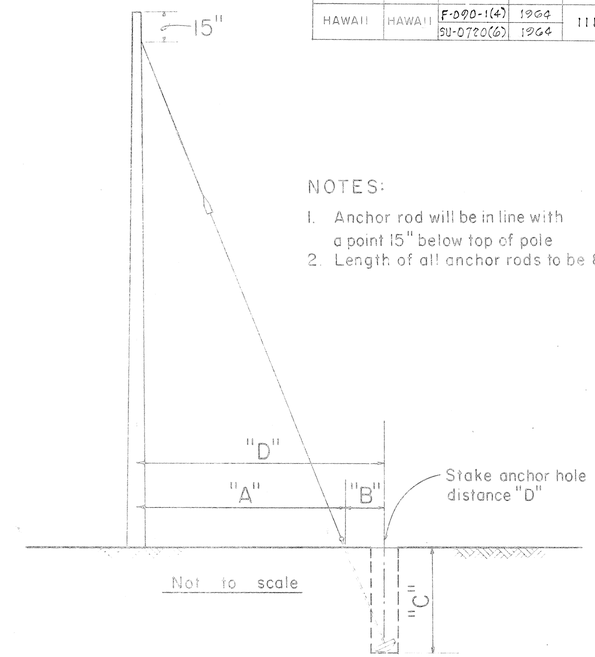

NOTES:
1. Anchor rod will be in line with a point 15" below top of pole
2. Length of all anchor rods to be 8'-0"

FOR 35', 40', 45', 50', 55', & 60' POLES				
LEAD-ANCHOR ROD TO ℄ OF POLE "A"	ANCHOR ROD TO ℄ OF HOLE "B"	VERTICAL DEPTH 18" D.M. "C"	VERTICAL DEPTH 24" D.M. "C"	TOTAL DISTANCE POLE TO HOLE D=(A+B)
5'-0"	1'-0"	7'-3"	7'-4"	6'-0"
10'-0"	1'-11"	7'-1"	7'-3"	11'-11"
15'-0"	2'-8"	6'-9"	7'-1"	17'-8"
20-0"	3'-3"	6'-6"	6'-10"	23'-3"
25-0	3'-10"	6'-2"	6'-7"	28'-10"
FOR 25', & 30' POLES				
5-0"	1'-8"	7'-1"	7'-4"	6'-8"
10'-0"	3'-0"	6'-7"	7'-0"	13'-0"
15'-0"	4'-0"	6'-1"	6'-6"	19'-0"
20-0'	4'-8"	5'-6"	5'-10"	24'-8"
25'-0"	5'-2"	4'-11"	5'-4"	30'-2"

D.M. = Deadman

FOR 40' THRU 60' POLES WITH 1-1 4" x 10'-0" ANCHOR RODS, SEE SHEET No. 110.

ANCHORING DATA

05-101

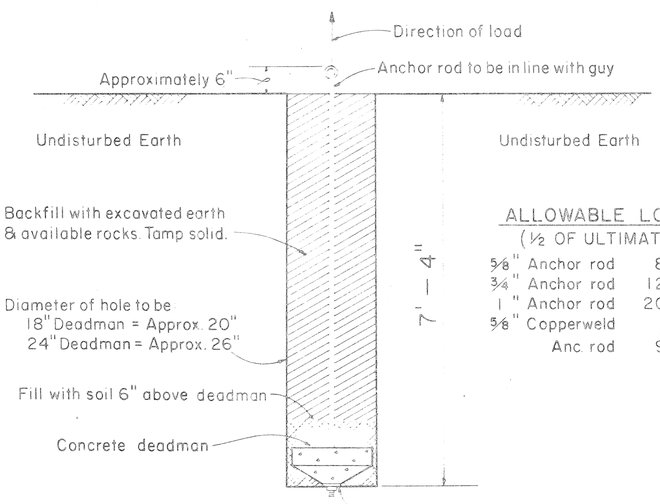

ALLOWABLE LOAD
(½ OF ULTIMATE)

5/8" Anchor rod	8,000#
3/4" Anchor rod	12,500#
1" Anchor rod	20,000#
5/8" Copperweld Anc. rod	9,250#

NOTES:
1. Size of anchor rod to be specified by the Engineer.
2. Use Standard 05-101 Anchoring Data.

SIDE - WALK ANCHOR

Scale: 3/4" = 1' - 0"

05-104

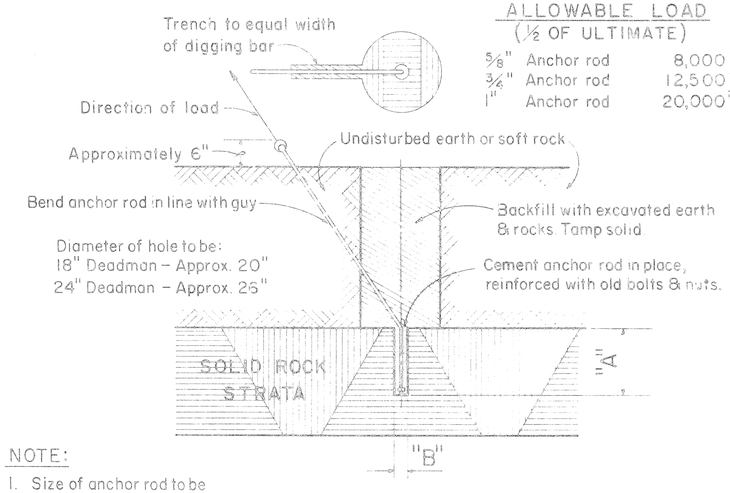

ALLOWABLE LOAD
(½ OF ULTIMATE)

5/8" Anchor rod	8,000#
3/4" Anchor rod	12,500#
1" Anchor rod	20,000#

NOTE:
1. Size of anchor rod to be specified by the Engineer.
2. "A" Should not be less than 24". If "A" is less than 24" complete hole & install anchor per O.H. Standard 05-102,103,or104.
3. "B" 5/8" Anchor rod drill 2" hole
   3/4" Anchor rod drill 2" hole
   1" Anchor rod drill 2 1/2" hole
4. Use Standard 05-101 Anchoring Data.

ROCK ANCHOR

Not to Scale

05-105

APPROVED:

F. H. Judd 2-10-64
OUTSIDE PLANT ENGR. H.T.Co. LTD. DATE

Thomas H. Kau 2/10/64
PRINCPL. DISTR. ENGR. H.E. CO., LTD. DATE

STATE OF HAWAII
DEPARTMENT OF TRANSPORTATION
HIGHWAYS DIVISION

STANDARD DETAILS
H.E. Co. AND H.T. Co.
ANCHOR DETAILS AND ANCHORING DATA

KAMEHAMEHA HIGHWAY PROJ. No. F-090-1(4)
MOANALOA ROAD PROJ. No. SU-0720 (6)
Scales: As Noted Date Dec. 1963

SHEET No. 7 OF 15 SHEETS

FED. AID DIST. NO.	STATE	FED. AID PROJ. NO.	FISCAL YEAR	SHEET NO.	TOTAL SHEETS
HAWAII	HAWAII	F-090-1(4)	1964	112	177
		SU-0720(6)	1964		

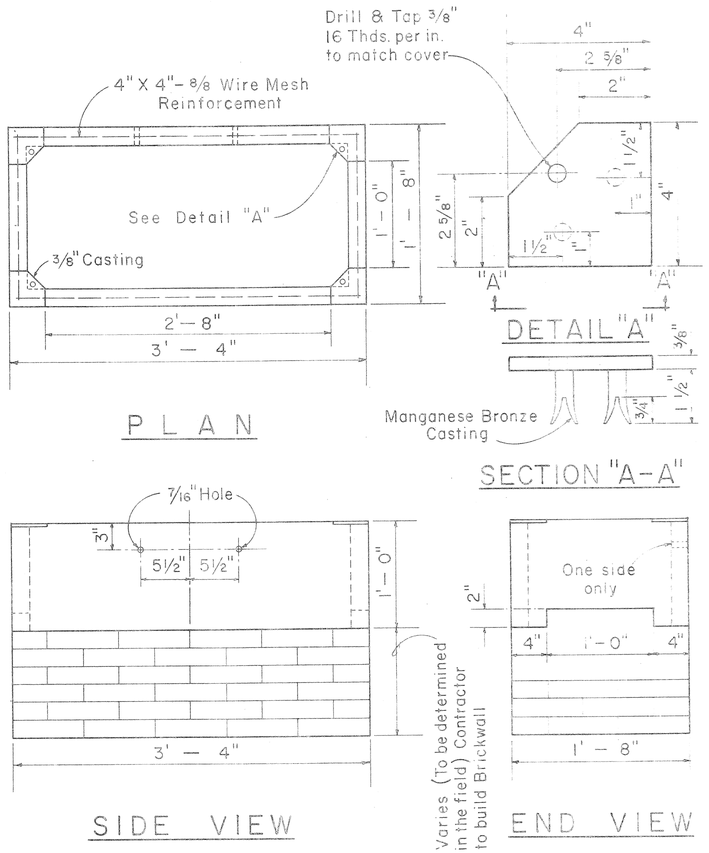

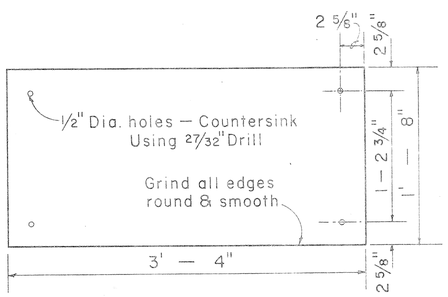

NOTES:
Use 3/8" Plate for driveways.
Concrete Box 225 Lbs.
1/4" Checker Plate 62 Lbs.

1/4" CHECKER PLATE COVER

(Hot dip galvanize checkered plate after drilling, countersinking, and grinding edge)

1'-4" X 3'-0" CONCRETE SERVICE BOX

Scale: 1 1/2" = 1'-0"

UI-103

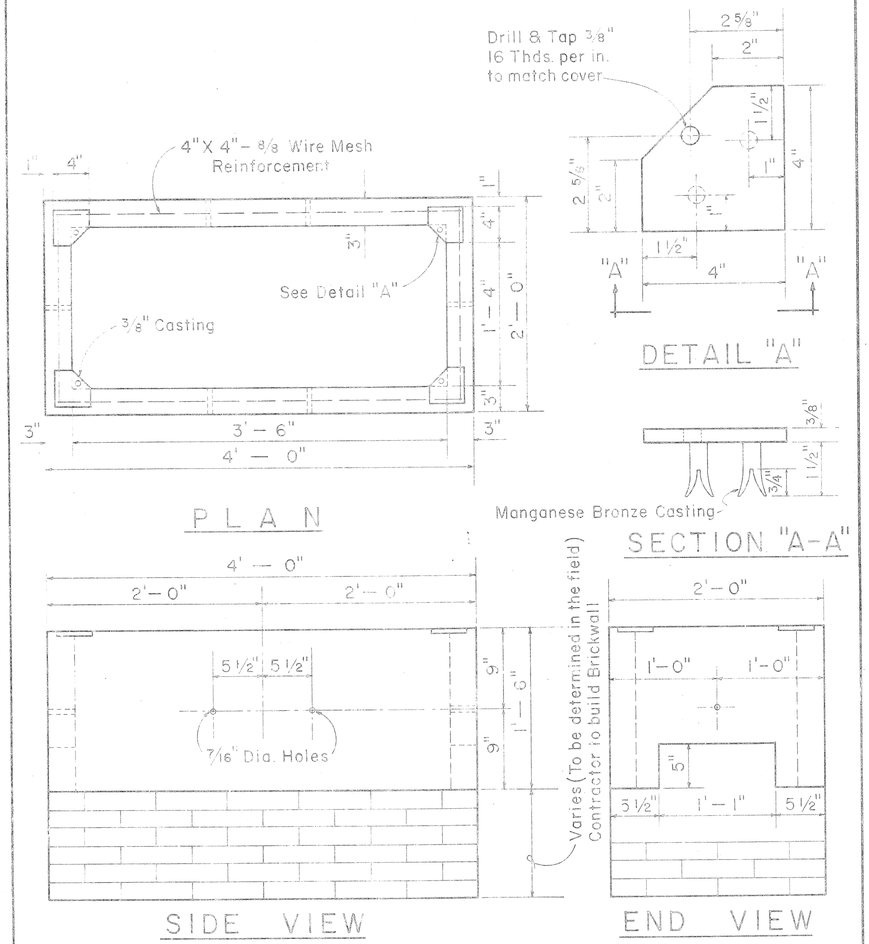

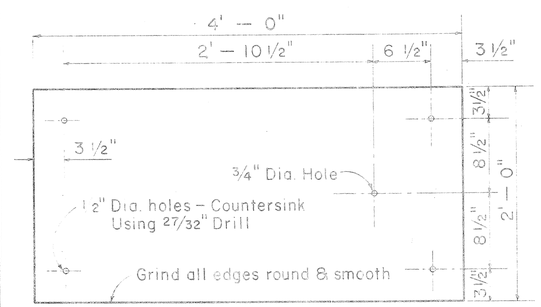

NOTES:
Use 3/8" Plate for driveway.
Concrete Box 575 Lbs.
1/4" Checker Plate 130 Lbs.

1/4" CHECKER PLATE COVER

(Hot dip galvanize checkered plate after drilling, countersinking, and grinding edge)

NOTE: H.T.Co. No. 516 PULL BOX SIMILAR TO H.E.Co.'s 1'-6" X 3'-6" CONCRETE SERVICE BOX.

1'-6" X 3'-6" CONCRETE SERVICE BOX

Scale: 1 1/2" = 1'-0"

UI-103

SOUTHERN PINE & DOUGLAS FIR — 8 LB. CREOSOTED TREATMENT

LENGTH IN FEET	CLASS	APPROXIMATE MINIMUM DIMENSIONS — INCHES: AT TOP DIA.	AT TOP CIR.	6'-0" FROM BUTT DIA.	6'-0" FROM BUTT CIR.	AVERAGE WEIGHT IN POUNDS: S.P.	D.F.	POLE SETTING DEPTH: DEPTH IN SOIL	DEPTH IN ROCK	BREAKING LOAD 2'-0" BELOW TOP OF POLES (LBS)
JOINT POLES (J.P. POLES)										
25	5	6.05	19	8.28	26.0	491	525	4'-6"	3'-0"	1,900
30	5	6.05	19	8.92	28.0	660	600	5'-0"	3'-0"	1,900
35	5	6.05	19	9.55	300	862	770	5'-0"	3'-6"	1,900
40	3	7.32	23	11.79	37.0	1,403	1,320	5'-6"	3'-6"	3,000
45	3	7.32	23	12.26	38.5	1,664	1,575	6'-0"	4'-0"	3,000
50	3	7.32	23	12.73	40.0	1,925	1,850	6'-6"	4'-0"	3,000
55	3	7.32	23	13.23	41.5	2,200	2,145	7'-0"	4'-6"	3,000
TRANSMISSION POLES (T. POLES)										
45	2	7.96	25	13.23	41.5	1,911	1,845	6'-0"	4'-0"	3,700
50	2	7.96	25	13.69	43.0	2,214	2,150	6'-6"	4'-0"	3,700
60	1	8.59	27	15.77	49.5	3,451	3,360	7'-0"	4'-6"	4,500

S.P. — SOUTHERN YELLOW PINE
D.F. — DOUGLAS FIR

NOTE:
The ultimate fiber stress for creosoted Southern Yellow Pine & Douglas Fir is 7,400 Lbs. per square inch.

REFERENCES:
American Standard Association 05.4-1,941, 05.6-1,945
Standard Handbook for Electrical Engineers. Eighth Edition
H. E. Co. Specifications for poles.

WOOD POLE DATA

05-501

APPROVED:

2-10-64
OUTSIDE PLANT ENGR. H.T.Co. LTD. DATE

2/10/64
PRINCPL. DISTR. ENGR. H.E.CO., LTD. DATE

STATE OF HAWAII
DEPARTMENT OF TRANSPORTATION
HIGHWAYS DIVISION
STANDARD DETAILS
H.E. Co. AND H.T. Co.
SERVICE BOX DETAILS
AND WOOD POLE DATA

KAMEHAMEHA HIGHWAY — PROJ. No. F-090-1(4)
MOANALOA ROAD — PROJ. No. SU-0720 (6)
Scales: As Noted — Date: Dec. 1963

SHEET NO. 8 OF 15 SHEETS

112

ORIGINAL PLAN	NOTE BOOK	No.	DATE
SURVEY PLOTTED BY			
DRAWN BY			
TRACED BY			
REVIEWED BY			
QUANTITIES BY			
CHECKED BY			

34

LIETZ 1103 ARKWRIGHT TRACING CLOTH 15-60 200P

FED. ROAD DIST. NO.	STATE	FED. AID PROJ. NO.	FISCAL YEAR	SHEET NO.	TOTAL SHEETS
HAWAII	HAW	F-090-1(4)	1964	113	177
		SU-0720(G)	1964		

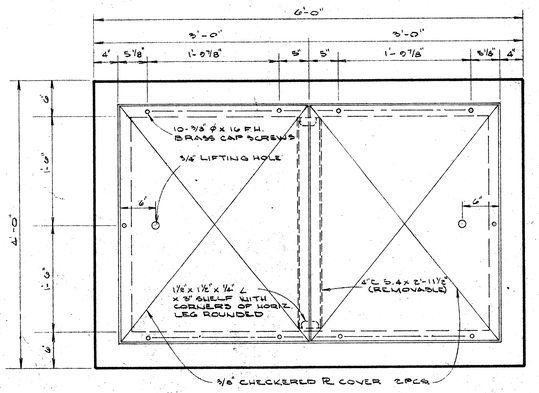

TOP PLAN
SCALE: 1"=1'-0"

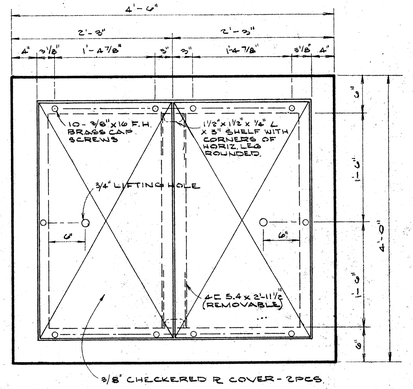

TOP PLAN
SCALE: 1"=1'-0"

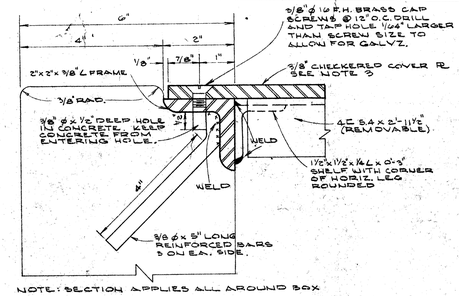

NOTE: SECTION APPLIED ALL AROUND BOX

DETAIL "C"
SCALE: 1/2 SIZE

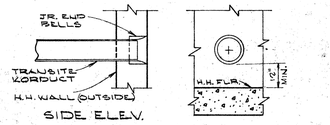

SIDE ELEV. TOP PLAN FRONT VIEW
1-DUCT

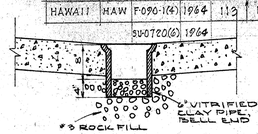

DETAIL OF SUMP
SCALE: 3/4"=1'-0"

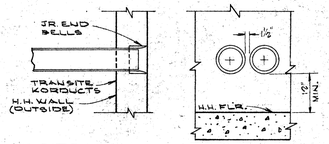

SIDE VIEW FRONT VIEW
2-DUCTS

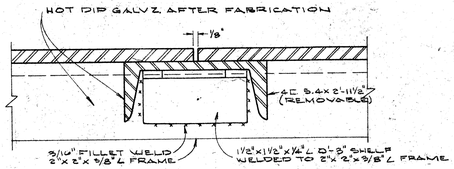

DETAIL "D"
SCALE: 1/2 SIZE

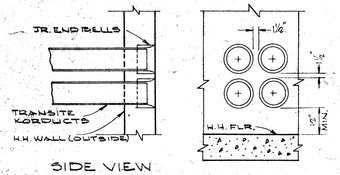

SIDE VIEW FRONT VIEW
TOP PLAN
4-DUCTS

DUCT ENTRANCE DETAILS
NO SCALE

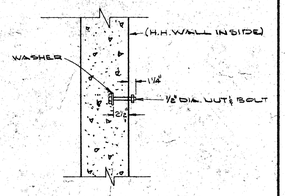

CABLE RACK STUD BOLT DETAIL
SCALE: 3/4"=1'-0"

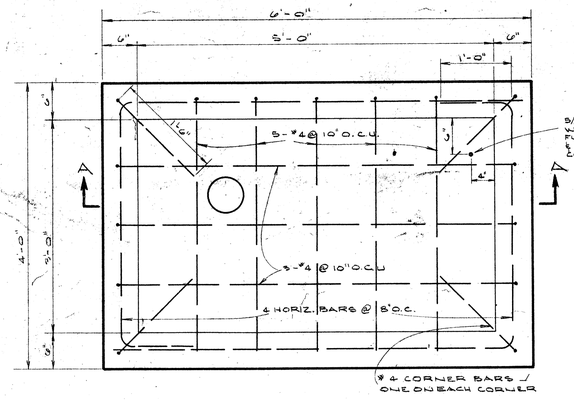

SECTIONAL PLAN
SCALE: 1"=1'-0"

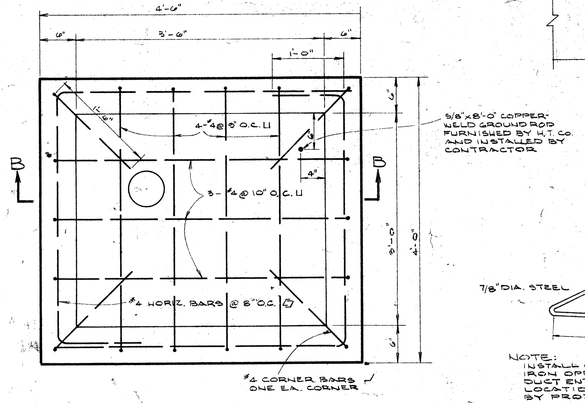

SECTIONAL PLAN
SCALE: 1"=1'-0"

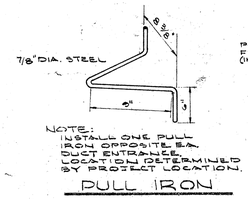

NOTE:
INSTALL ONE PULL IRON OPPOSITE EA. DUCT ENTRANCE. LOCATION DETERMINED BY PROJECT LOCATION.

PULL IRON

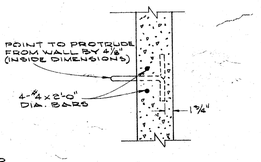

SECTIONAL VIEW
SCALE: 3/4"=1'-0"

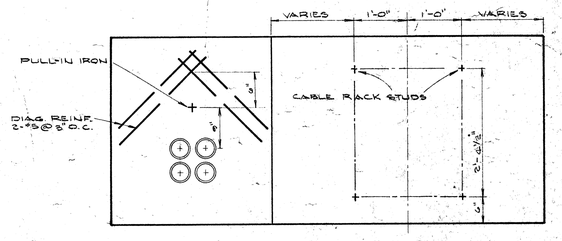

ELEV. OF INSIDE WALLS - H.H. TYPE 1 & 2
(OPPOSITE FACES SIMILAR)
SCALE: 3/4"=1'-0"

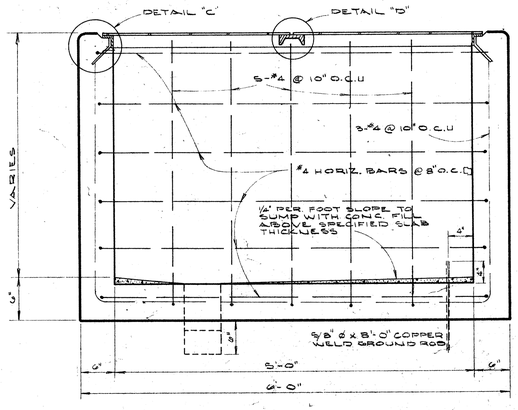

SECTION A-A
SCALE: 1"=1'-0"
HANDHOLE TYPE #1
(3'-0" x 5'-0" INSIDE)

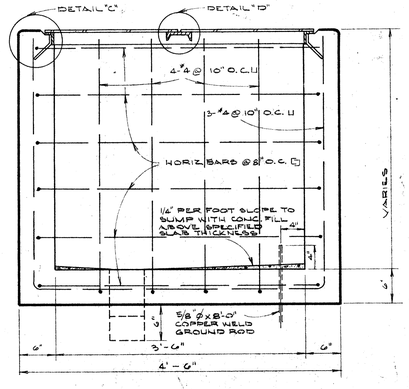

SECTION B-B
SCALE: 1"=1'-0"
HANDHOLE TYPE #2
(3'-0" x 3'-6" INSIDE)

GENERAL NOTES:

1. CONCRETE FINISH:
   FLOORS - SMOOTH METAL TROWELLED.
   EXPOSED WALL SURFACES AND EDGES - SMOOTH AND FREE FROM DEFECTS.
2. CONCRETE TO DEVELOP COMPRESSIVE STRENGTH - 3000 P.S.I IN 28 DAYS.
3. STEEL WORK:
   ANGLE FRAME, CHANNEL AND CHECKERED PLATE COVERS SHALL BE HOT DIP GALVANIZED AFTER FABRICATION.
4. FOR DUCT LINE CONSTRUCTION STANDARDS, SEE SHEET NO. 115 & 116
5. THESE HANDHOLES ARE DESIGNED FOR INSTALLATION IN AREAS OTHER THAN ROADWAYS.

APPROVED:
F. H. Judd 7-10-64
OUTSIDE PLANT ENGR. H.T.Co. LTD. DATE

SHEET NO. 9 OF 15 SHEETS

KAMEHAMEHA HIGHWAY PROJ. NO. F-090-1(4)
MOANALUA ROAD PROJ. NO. SU-0720(G)

FILE / ASSIGNMENT / CONSTRUCTION / MAINTENANCE / TOTAL PRINTS	DR. Y. K. ENG. / CHK. TEL. / INDEX APP'D.	4' X 6' HANDHOLE
	HAWAIIAN TELEPHONE COMPANY HAWAII	DATE / SHEET ___ OF ___

D

113

FED. ROAD DIST. NO.	STATE	FED. AID PROJ. NO.	FISCAL YEAR	SHEET NO.	TOTAL SHEETS
HAWAII	HAW.	F-090-1(4)	1964	114	177
		SU-0720(6)	1964		

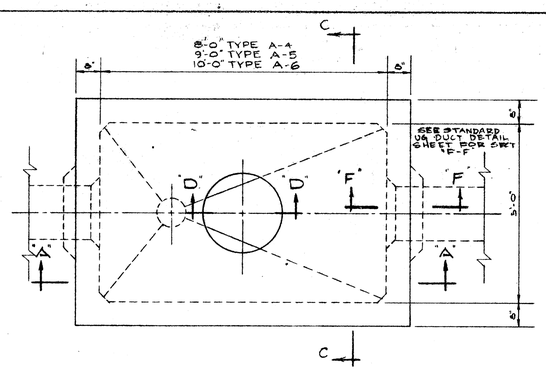

PLAN - M.H. TYPE "A" FOR ROADWAY AREAS
SCALE: 1/2" = 1'-0"

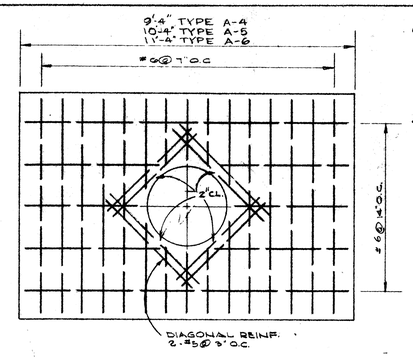

ROOF SLAB REINF. PLAN
SCALE: 1/2" = 1'-0"

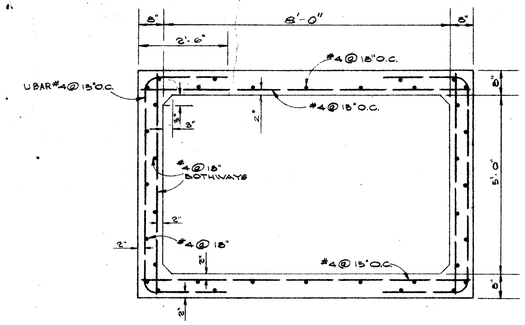

SECTION "B-B" TYPE A-4
SCALE: 1/2" = 1'-0"

NOTE:
ALL CONSTRUCTION JOINTS SHALL BE WATERPROOFED WITH TWO APPLICATIONS OF THORO SEAL OR EQUAL.

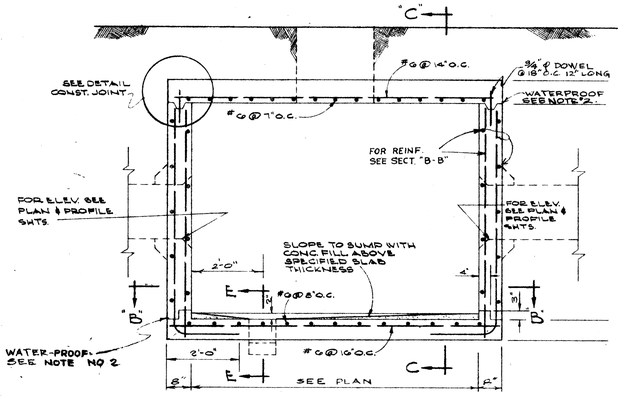

SECTION "A-A"
SCALE: 1/2" = 1'-0"

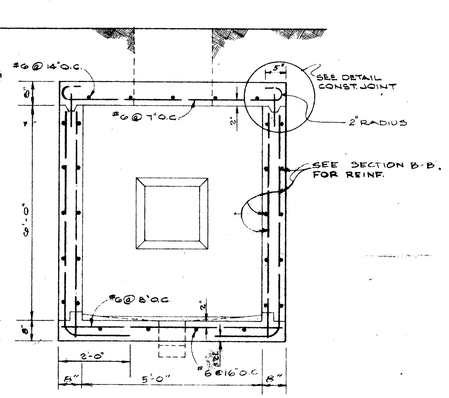

SECTION "C-C"
SCALE: 1/2" = 1'-0"

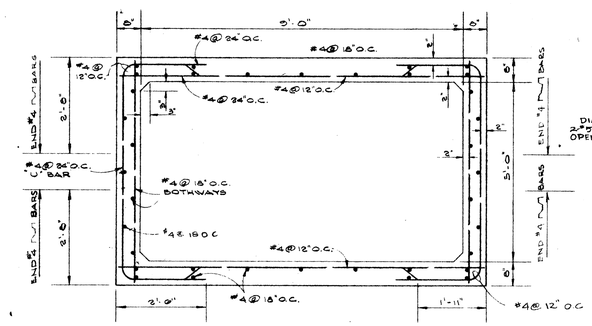

SECTION "B-B" TYPE A-5
SCALE: 1/2" = 1'-0"

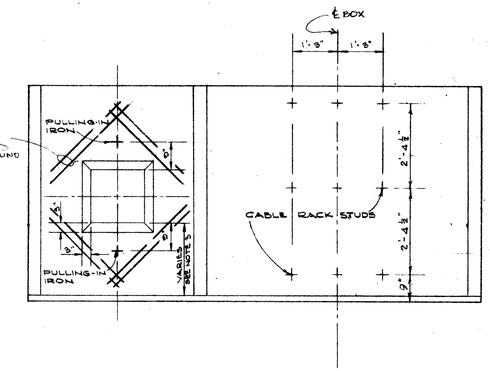

ELEV. OF INSIDE WALLS - TYPE A-4
(OPPOSITE FACES SIMILAR)
SCALE: 1/2" = 1'-0"

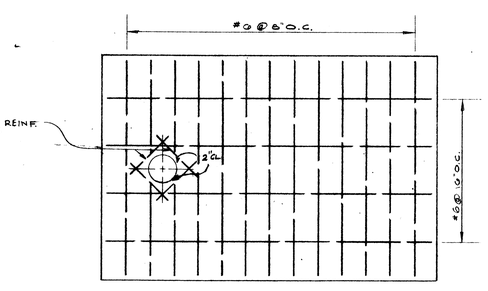

FLOOR SLAB REINF. PLAN
SCALE: 1/2" = 1'-0"

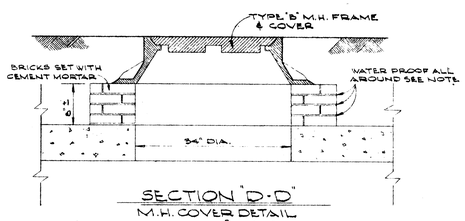

SECTION "D-D"
M.H. COVER DETAIL
SCALE: 3/4" = 1'-0"

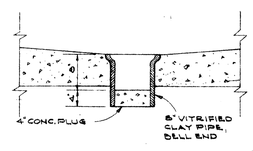

SECTION "E-E"
SCALE: 3/4" = 1'-0"

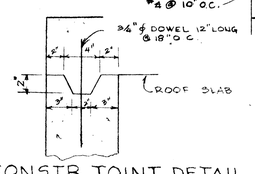

CONSTR. JOINT DETAIL
SCALE 1 1/2" = 1'

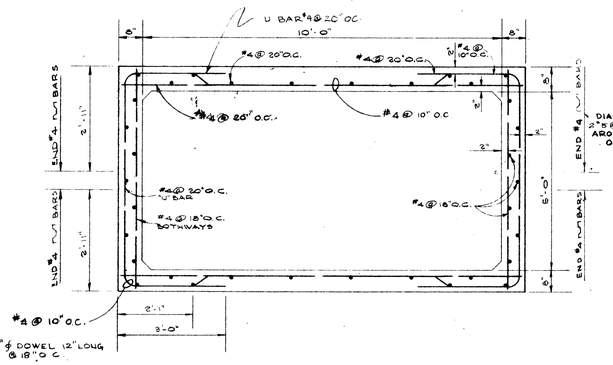

SECTION "B-B" TYPE A-6
SCALE: 1/2" = 1'-0"

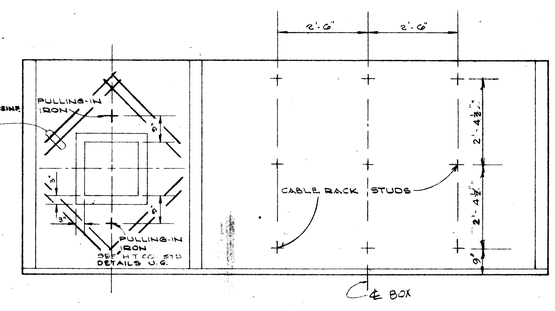

ELEVATION OF INSIDE WALLS TYPES A-5, A-6
SCALE: 1/2" = 1'-0"

APPROVED
F. H. Judd 2-10-64
OUTSIDE PLANT ENGR. H.T.Co. LTD. DATE

SHEET NO. 10 OF 15 SHEETS

KAMEHAMEHA HIGHWAY — PROJ. NO. F-090-1(4)
MOANALUA ROAD — PROJ. NO. SU-0720(6)

FILE / ASSIGNMENT / CONSTRUCTION / MAINTENANCE / TOTAL PRINTS	DR. ENG. T. FUJINAKA; CHK. TEL.; INDEX APP'D.	TYPE "A" MANHOLES FOR ROADWAY AREAS
	HAWAIIAN TELEPHONE COMPANY HAWAII	DATE / SHEET OF

D

114

FED. AID DIST. NO.	STATE	FED. AID PROJ. NO.	FISCAL YEAR	SHEET NO.	TOTAL SHEETS
HAWAII	HAWAII	F-090-1(4) SU-0720(6)	1964 1966	115	177

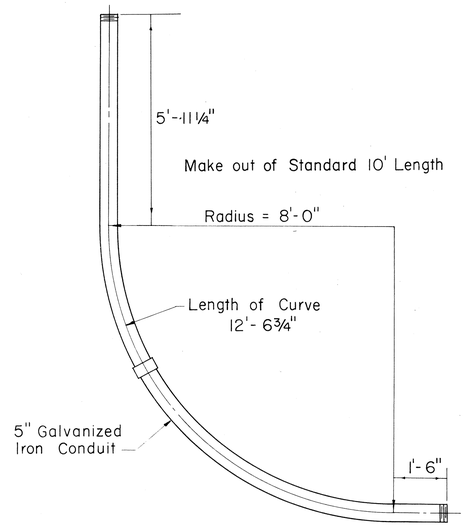

46 KV RISER CONDUIT BEND

(8'-0" RADIUS)

Not to Scale

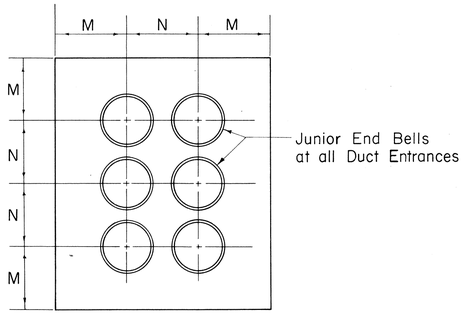

TYPICAL DUCT DETAIL AT MANHOLE WALL

Not to Scale

SIZE	M	N
3"	5"	6"
4"	5½"	7"
4½"	5½"	7½"
5"	6"	8"

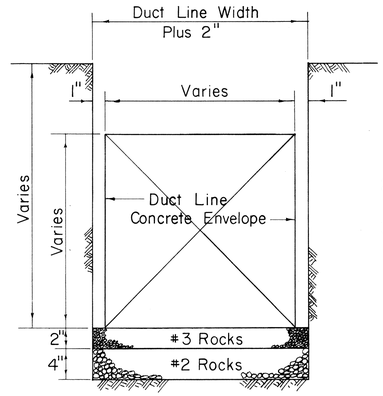

TYPICAL EXCAVATION DETAIL

Not to Scale

NOTES

1. Size of Concrete Envelope and Depth of Excavation to be determined by Project concerned.
2. Widen Trench Excavation when Forms are used.
3. Rock Foundation required only when Water is encountered.

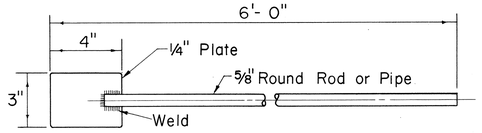

CONCRETE DUCT ENVELOPE TAMPING ROD

Scale: 3" = 1'-0"

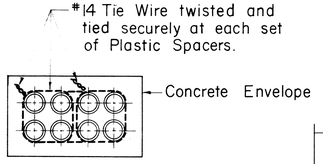

TIE WIRE DETAIL

FOR DUCT LINE MORE THAN 4 DUCTS WIDE

Not to Scale

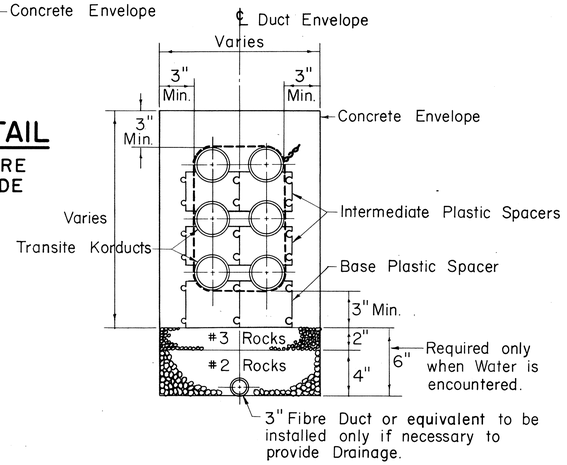

TYPICAL DUCT PLASTIC SPACERS & DRAINAGE SECTION

(6 WAY DUCT SHOWN - 3 HIGH - 2 WIDE)

Not to Scale

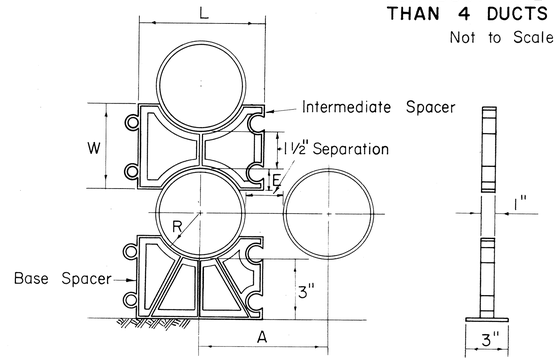

TYPICAL PLASTIC SPACERS

Not to Scale

SIZE	R	E	W	A	L
3"	$1\frac{27}{32}$"	$\frac{7}{8}$"	$3\frac{1}{4}$"	$5\frac{1}{8}$"	5"
4"	$2\frac{13}{32}$"	$1\frac{1}{8}$"	$3\frac{3}{4}$"	$6\frac{1}{4}$"	$6\frac{1}{8}$"
$4\frac{1}{2}$"	$2\frac{23}{32}$"	$1\frac{1}{4}$"	4"	$6\frac{7}{8}$"	$6\frac{3}{4}$"
5"	$3\frac{1}{16}$"	$1\frac{3}{8}$"	$4\frac{1}{4}$"	$7\frac{5}{8}$"	$7\frac{1}{2}$"

For 1½" Separation

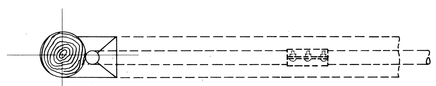

PLAN

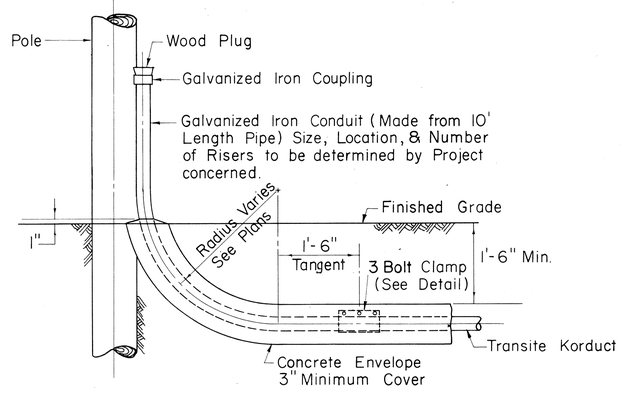

ELEVATION

TYPICAL POLE RISER DETAIL

Scale: ¾" = 1'-0"

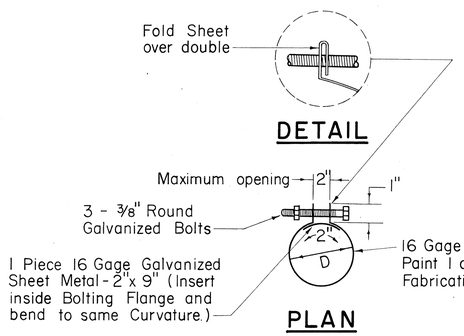

DETAIL

PLAN

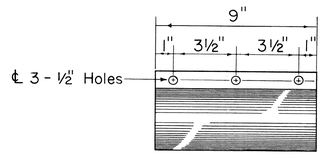

ELEVATION

3 BOLT CLAMP DETAIL

Scale: 3" = 1'-0"

APPROVED:

PRINCPL. DISTR. ENGR. H.E.CO., LTD. — DATE 2/19/68

DRAWING NUMBER 18585

STATE OF HAWAII
DEPARTMENT OF TRANSPORTATION
HIGHWAYS DIVISION

STANDARD DETAILS

CONSTRUCTION STANDARDS
TRANSITE KORDUCTS
UNDERGROUND DUCT LINES

KAMEHAMEHA HIGHWAY — PROJ. No. F-090-1(4)
MOANALUA ROAD — PROJ. No. SU-0720 (6)
Scales: As Noted — Date Dec. 1963

SHEET NO. 11 OF 15 SHEETS

115

FED. AID DIST. NO.	STATE	FED. AID PROJ. NO.	FISCAL YEAR	SHEET NO.	TOTAL SHEETS
HAWAII	HAWAII	F-090-1(4) SU-0720(6)	1964 1964	116	177

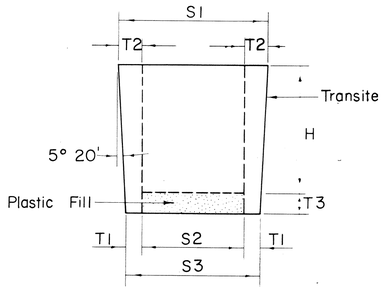

PLUGS FOR TRANSITE KORDUCTS

Not to Scale

SIZE	H	S1	S2	S3	T1	T2	T3
3"	4"	$3\frac{3}{8}$"	2"	$2\frac{5}{8}$"	$\frac{5}{16}$"	$\frac{11}{16}$"	$\frac{3}{4}$"
4"	$4\frac{1}{2}$"	$4\frac{27}{64}$"	$2\frac{3}{4}$"	$3\frac{37}{64}$"	$\frac{13}{32}$"	$\frac{27}{32}$"	$\frac{3}{4}$"
$4\frac{1}{2}$"	$4\frac{1}{2}$"	$4\frac{59}{64}$"	3"	$4\frac{5}{64}$"	$\frac{35}{64}$"	$\frac{31}{32}$"	$\frac{3}{4}$"
5"	$4\frac{1}{2}$"	$5\frac{27}{64}$"	$3\frac{1}{2}$"	$4\frac{37}{64}$"	$\frac{35}{64}$"	$\frac{31}{32}$"	$\frac{3}{4}$"

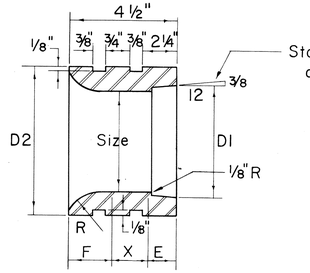

JUNIOR END BELLS

Not to Scale

SIZE	D1	D2	F	X	E	R
3"	$3\frac{25}{64}$"	$4\frac{1}{2}$"	$1\frac{11}{32}$"	$1\frac{29}{32}$"	$1\frac{1}{4}$"	$1\frac{3}{4}$"
4"	$4\frac{25}{64}$"	$5\frac{3}{4}$"	$1\frac{9}{16}$"	$1\frac{9}{16}$"	$1\frac{3}{8}$"	2"
$4\frac{1}{2}$"	$4\frac{57}{64}$"	$6\frac{1}{4}$"	$1\frac{9}{16}$"	$1\frac{9}{16}$"	$1\frac{3}{8}$"	2"
5"	$5\frac{29}{64}$"	7"	$1\frac{9}{16}$"	$1\frac{7}{16}$"	$1\frac{1}{2}$"	2"

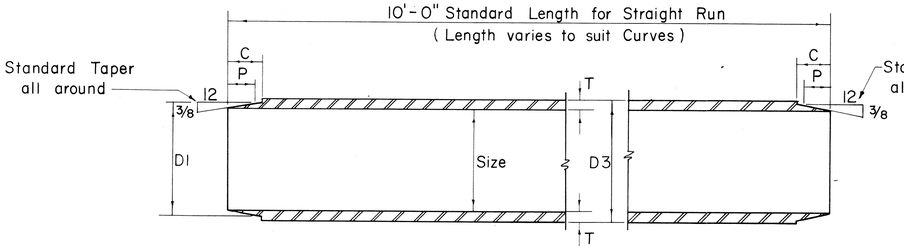

TRANSITE KORDUCTS

Not to Scale

SIZE	D1	D3	C	P	T
3"	$3\frac{25}{64}$"	$3\frac{35}{64}$"	$1\frac{1}{8}$"	$\frac{7}{8}$"	$\frac{17}{64}$"
4"	$4\frac{25}{64}$"	$4\frac{35}{64}$"	$1\frac{1}{4}$"	1"	$\frac{17}{64}$"
$4\frac{1}{2}$"	$4\frac{57}{64}$"	$5\frac{3}{64}$"	$1\frac{1}{4}$"	1"	$\frac{17}{64}$"
5"	$5\frac{29}{64}$"	$5\frac{39}{64}$"	$1\frac{25}{64}$"	$1\frac{1}{8}$"	$\frac{19}{64}$"

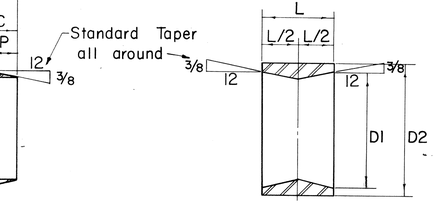

SIZE	D1	D2	L
3"	$3\frac{25}{32}$"	$4\frac{11}{64}$"	$2\frac{1}{4}$"
4"	$4\frac{25}{64}$"	$5\frac{3}{16}$"	$2\frac{1}{2}$"
$4\frac{1}{2}$"	$4\frac{57}{64}$"	$5\frac{49}{64}$"	$2\frac{1}{2}$"
5"	$5\frac{29}{64}$"	$6\frac{21}{64}$"	$2\frac{3}{4}$"

TAPERED COUPLINGS

Not to Scale

Note "X"

Provide one set of Spacers
(a) 10 Ft. straight run for 4 Ducts high or less.
(b) 5 Ft. straight run for 5 Ducts high or more.

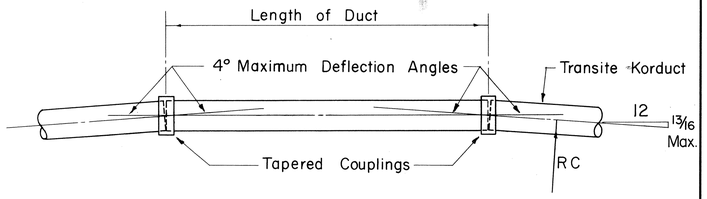

METHOD OF FORMING CURVES

Not to Scale

MINIMUM RADIUS TO FORM CURVES										
LENGTH OF DUCT	1'-0"	1'-6"	2'-0"	2'-6"	3'-0"	3'-6"	4'-0"	4'-6"	5'-0"	5'-6"
MIN. RAD. RC	14'-4"	21'-6"	28'-8"	35'-10"	42'-11"	50'-1"	57'-3"	64'-5"	71'-7"	78'-9"
LENGTH OF DUCT	6'-0"	6'-6"	7'-0"	7'-6"	8'-0"	8'-6"	9'-0"	9'-6"	10'-0"	
MIN. RAD. RC	85'-11"	93'-1"	100'-3"	107'-5"	114'-7"	121'-8"	128'-10"	136'-0"	143'-2"	

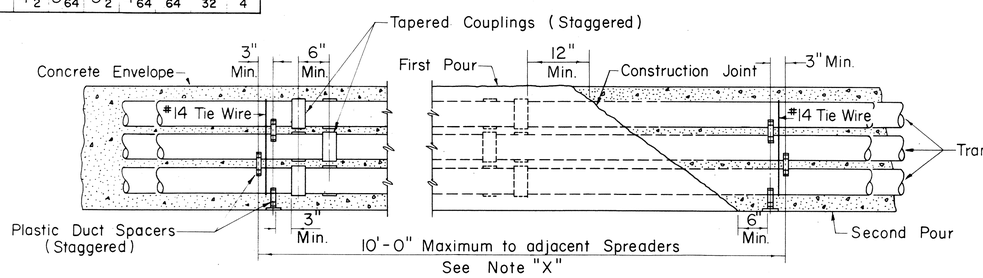

TYPICAL DUCT ENVELOPE ELEVATION

(6 WAY DUCT LINE SHOWN)

Not to Scale

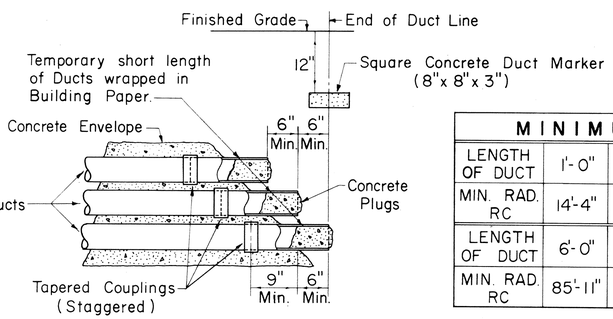

TYPICAL STUB OUT DETAIL

Not to Scale

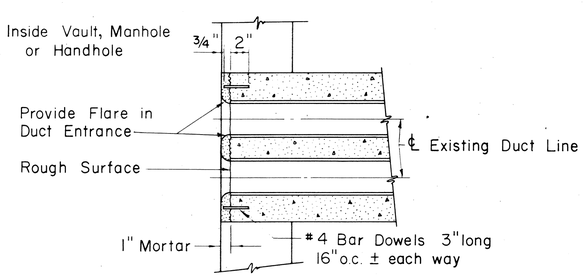

DUCT LINE ENTRANCE AT EXISTING DUCT LINE

Scale: 1 1/2" = 1'-0"

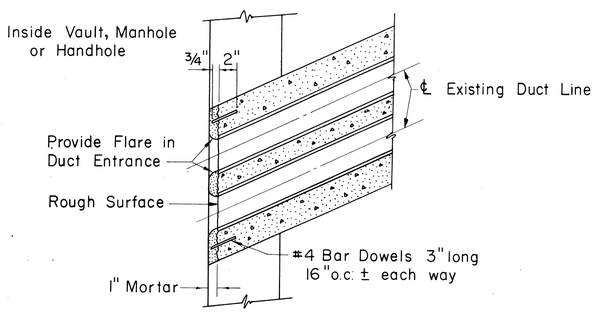

DUCT LINE DIAGONAL ENTRANCE

Scale: 1 1/2" = 1'-0"

APPROVED:

Manuel H. Kau
PRINCPL. DISTR. ENGR H.E. CO., LTD.

2/6/64
DATE:

DRAWING NUMBER 18585

STATE OF HAWAII
DEPARTMENT OF TRANSPORTATION
HIGHWAYS DIVISION

STANDARD DETAILS

CONSTRUCTION STANDARDS
TRANSITE KORDUCTS
UNDERGROUND DUCT LINES

KAMEHAMEHA HIGHWAY
MOANALUA ROAD
Scales: As Noted

PROJ. No. F-090-1(4)
PROJ. No. SU-0720 (6)
Date: Dec. 1963

SHEET NO. 12 OF 15 SHEETS

116

FED. AID DIST. NO.	STATE	FED. AID PROJ. NO.	FISCAL YEAR	SHEET NO.	TOTAL SHEETS
HAWAII	HAWAII	F-090-1(4)	1964	117	177

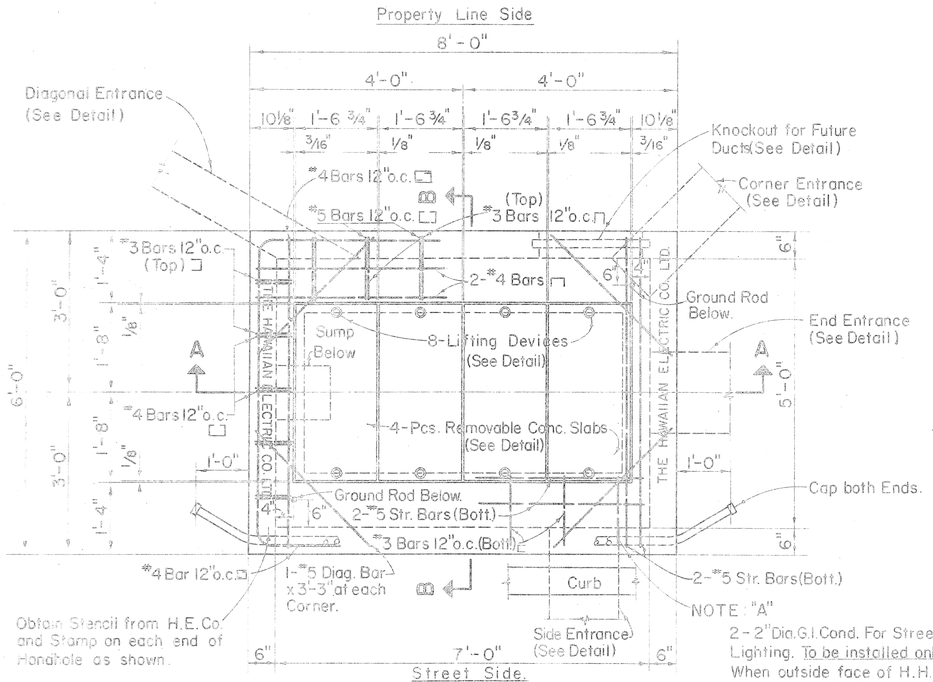

NOTE: "A"
2-2" Dia. G.I. Cond. For Street Lighting. To be installed only When outside face of H.H. Wall is less than 3" from Curbing.

TOP PLAN
Scale: ¾" = 1'-0"

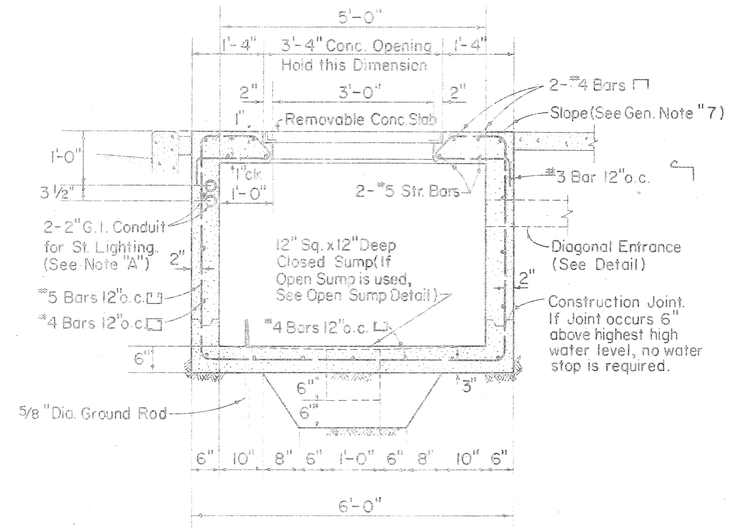

SECTION "B-B"
Scale: ¾" = 1'-0"

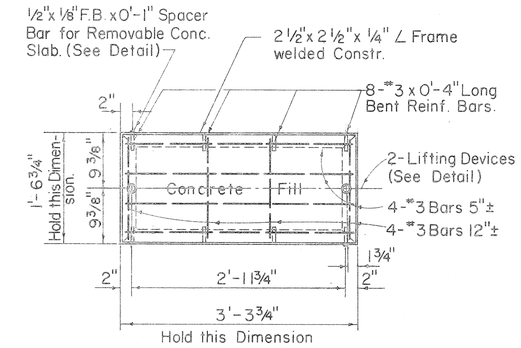

PLAN
Scale: 1" = 1'-0"

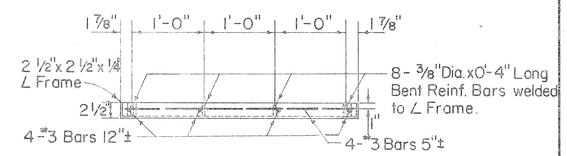

SECTION
REMOVABLE CONCRETE SLAB
Scale: 1" = 1'-0"

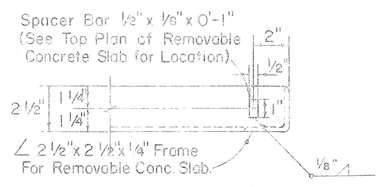

PART ELEVATION
SPACER BAR FOR REMOVABLE CONC. SLAB
Scale: 3" = 1'-0"

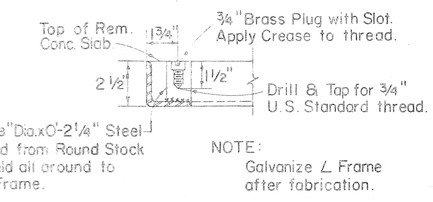

NOTE:
Galvanize ∠ Frame after fabrication.

REMOVABLE CONCRETE COVER SLAB LIFTING DEVICE
Scale: 3" = 1'-0"

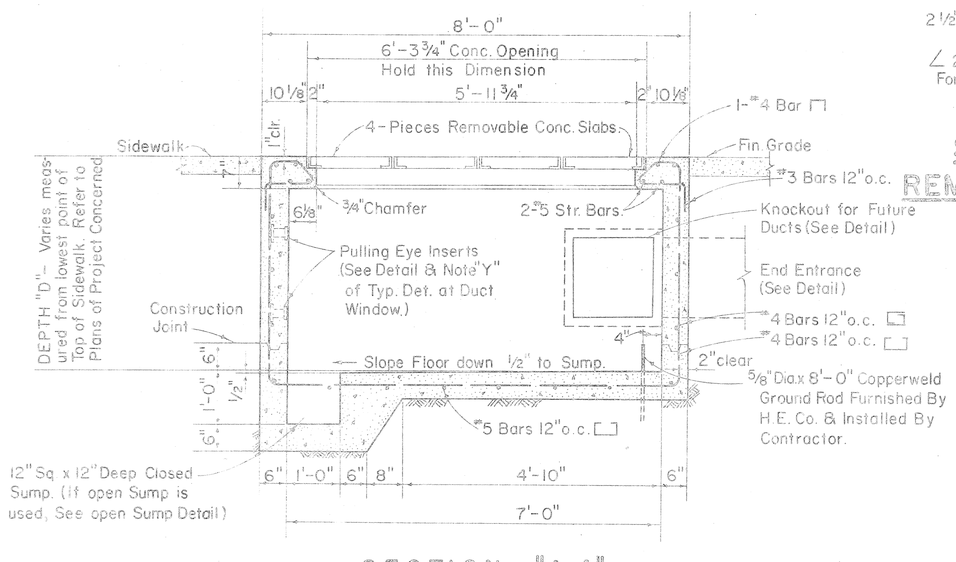

SECTION "A-A"
Scale: ¾" = 1'-0"

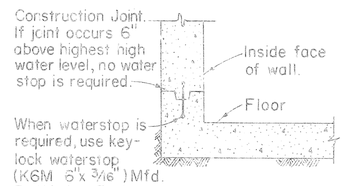

CONSTRUCTION JOINT TYPICAL
Not to Scale

REINFORCED CONCRETE QUANTITIES

QUANTITY OF MATERIALS FOR DEPTH "D" = 5'-0"
Concrete = 4 Cu. Yds.
Reinf. Steel = 707 Lbs.

WEIGHT PER REMOVABLE CONCRETE SLAB
Concrete = 150 Lbs.
Angle Frame = 40 Lbs.
Reinf. and Misc. Steel = 10 Lbs.
TOTAL = 200 Lbs.

MATERIALS FOR 6" DEPTH OF 6" THICK WALL
Concrete = 0.3 Cu. Yds.
Reinf. Steel = 23 Lbs.

FOR USE IN AREAS NOT SUBJECT TO VEHICULAR TRAFFIC

APPROVED:
Wanceah Kan 2/19/64
PRINCPL. DISTR. ENGR. H.E. CO., LTD. DATE

NOTE FOR DUCT LINE ENTRANCE KNOCKOUT FOR FUTURE DUCTS, TYPICAL DETAIL FOR DUCT WINDOW, BRASS PULLING EYE INSERT, SUMP DETAILS AND GENERAL NOTES; SEE SHEET NO.

DRAWING NUMBER 18843

STATE OF HAWAII
DEPARTMENT OF TRANSPORTATION
HIGHWAYS DIVISION

STANDARD DETAILS

HANDHOLE TYPE 57V (5'-0" x 7'-0") UNDERGROUND STANDARDS

KAMEHAMEHA HIGHWAY PROJ. No. F-090-1(4)

Scales: As Noted Date Dec. 1963

SHEET NO. 13 OF 15 SHEETS

117

18843

FED. AID DIST. NO.	STATE	FED. AID PROJ. NO.	FISCAL YEAR	SHEET NO.	TOTAL SHEETS
HAWAII	HAWAII	F-090-1(4)	1964	118	177

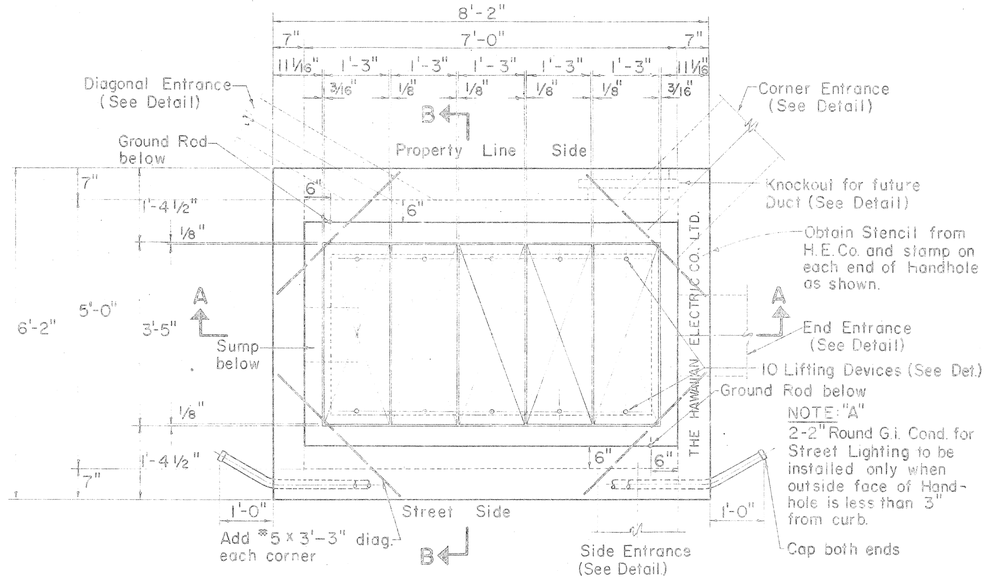

TOP PLAN
Scale: 3/4" = 1'-0"

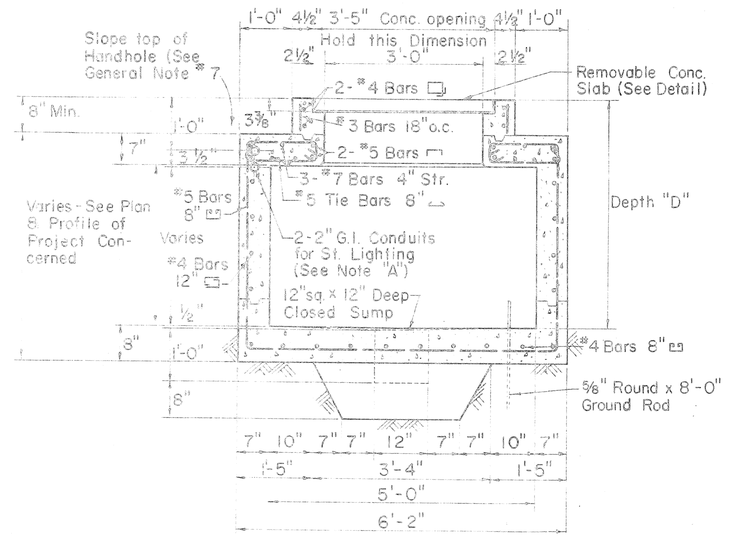

SECTION "B-B"
Scale: 3/4" = 1'-0"

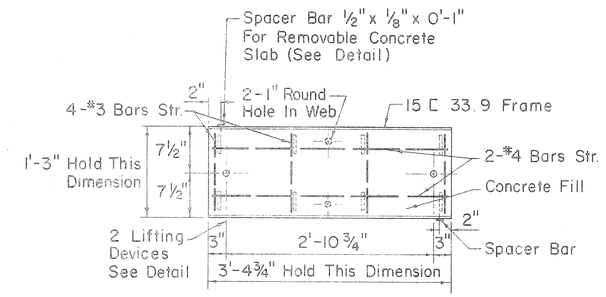

PLAN

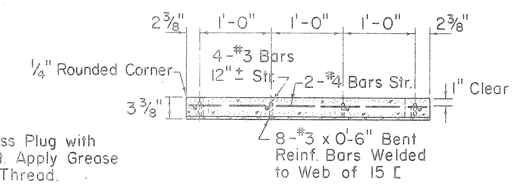

SECTION

REMOVABLE CONCRETE SLAB
Scale: 1" = 1'-0"

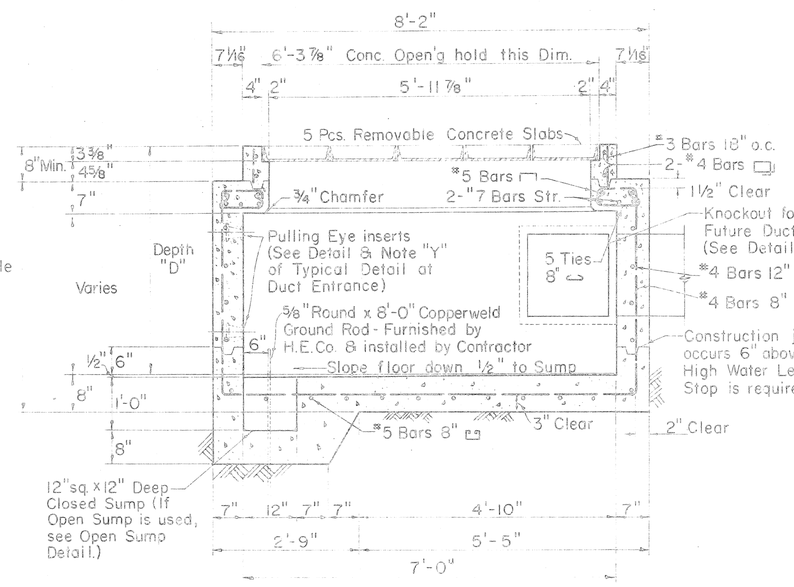

SECTION "A-A"
Scale: 3/4" = 1'-0"

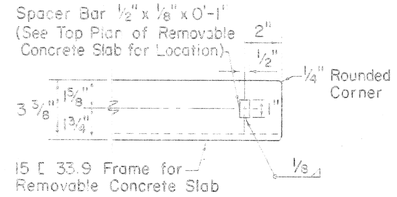

PART ELEVATION

SPACER BAR FOR REMOVABLE CONC. SLAB
Scale: 3" = 1'-0"

NOTE:
Galvanize 15 [and Steel Rod.

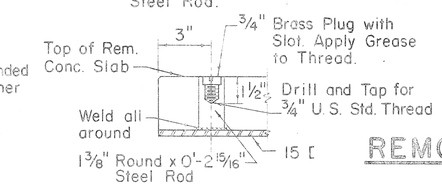

REMOVABLE CONCRETE COVER SLAB LIFTING DEVICE
Scale: 3" = 1'-0"

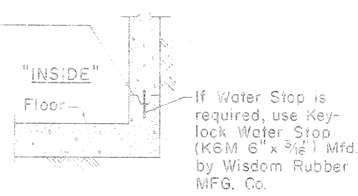

CONSTRUCTION JOINT TYPICAL
Scale: 3/4" = 1'-0"

REINFORCED CONCRETE QUANTITIES

QUANTITY OF MATERIALS FOR DEPTH "D"=5'-0"

Concrete = 5.1 Cu. Yds.
Reinf. Steel = 1416 Lbs.

WEIGHT PER REMOVABLE CONCRETE SLAB

Concrete = 137 Lbs.
15 [33.9 = 115 Lbs.
Reinf. and Misc. Steel = 10 Lbs.
TOTAL = 262 Lbs.

MATERIALS FOR 6" DEPTH OF 7" THICK WALL

Concrete = 0.3 Cu. Yds.
Reinf. Steel = 28 Lbs.

FOR USE IN AREAS SUBJECT TO PRESENT AND FUTURE VEHICULAR TRAFFIC

APPROVED:
Manuel H. Kau
PRINCPL. DISTR. ENGR. H.E.CO., LTD.
DATE: 2/19/64

NOTE FOR DUCT LINE ENTRANCE KNOCKOUT FOR FUTURE DUCTS, TYPICAL DETAIL FOR DUCT WINDOW, BRASS PULLING EYE INSERT, SUMP DETAILS AND GENERAL NOTES, SEE SHEET NO.

DRAWING NUMBER 18848

STATE OF HAWAII
DEPARTMENT OF TRANSPORTATION
HIGHWAYS DIVISION

STANDARD DETAILS

HANDHOLE TYPE 57V (5'-0" x 7'-0") UNDERGROUND STANDARDS

KAMEHAMEHA HIGHWAY PROJ. No. F-090-1(4)

Scales: As Noted Date Dec. 1963

SHEET NO. 14 OF 15 SHEETS

118

1864

FED. AID DIST. NO.	STATE	FED. AID. PROJECT	FISCAL YEAR	SHEET NO.	TOTAL SHEETS
HAWAII	HAWAII	F-090-1(4)	1964	119	177
		SU-0720(6)	1964		

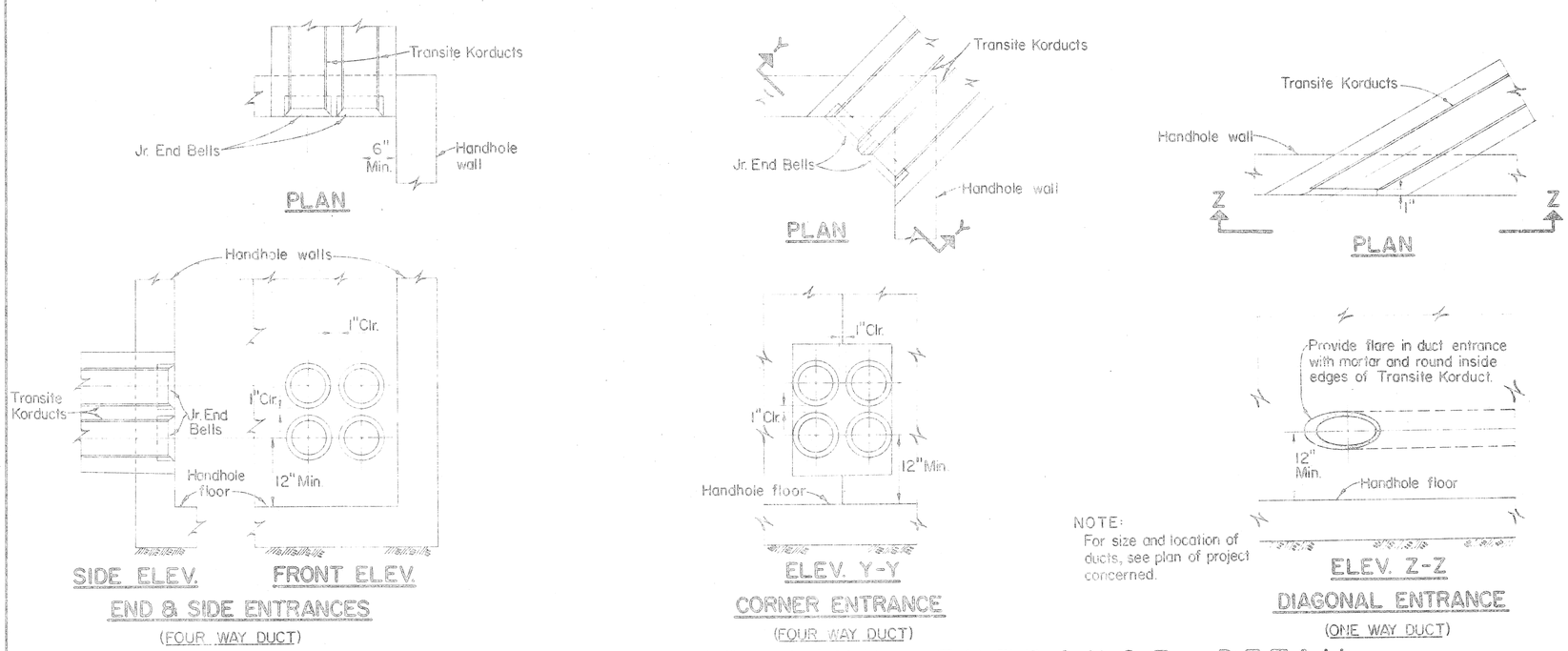

TYPICAL DUCT LINE ENTRANCE DETAIL

NOT TO SCALE

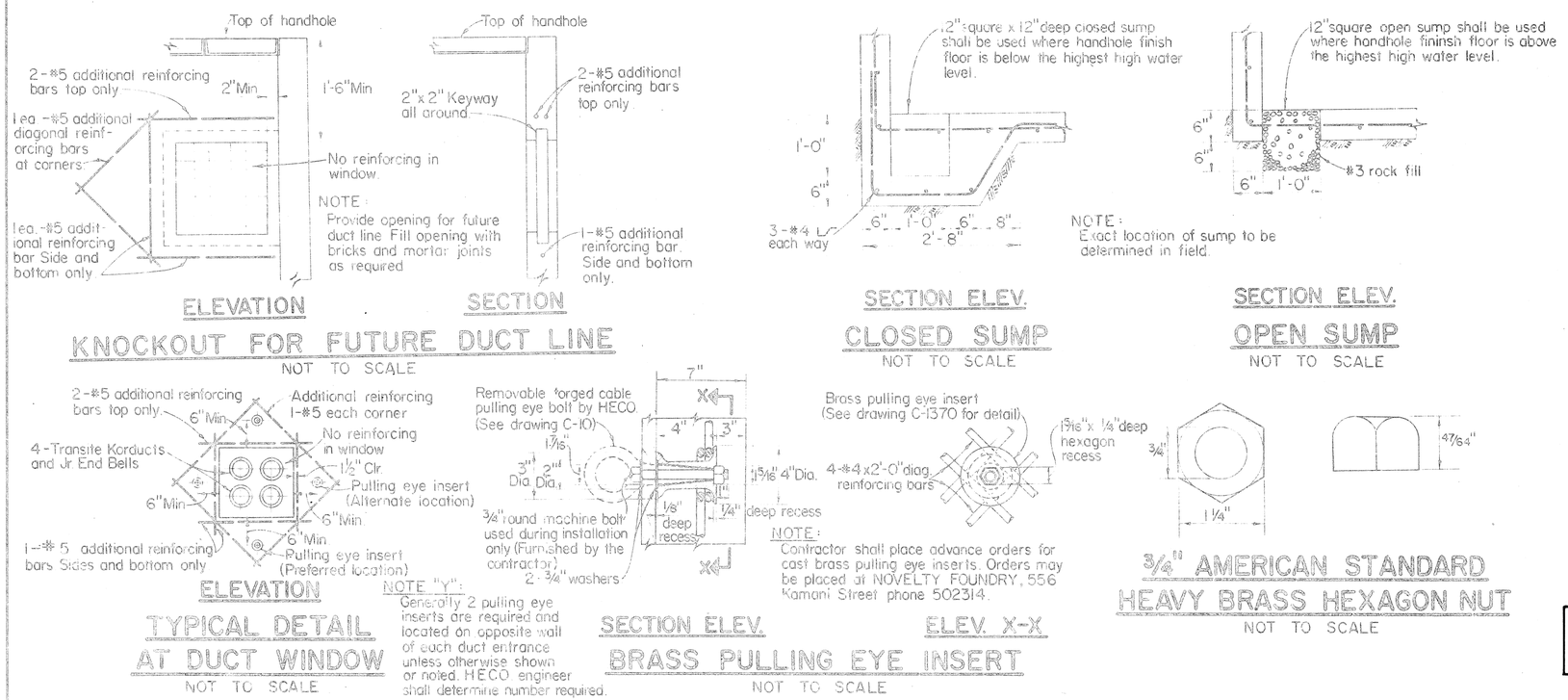

GENERAL NOTES

1. Concrete to develop compressive cylinder strength of 3000 PSI in 28 days.
2. CONCRETE FINISH:
   Top of Handhole - Woodfloated (sidewalk finish) according to State Highway or City and County of Honolulu specifications whichever the case maybe unless otherwise directed by the Engineer.
   Floor - Smooth metal trowelled.
   Exposed Wall Surfaces, and Edges - Smooth and free from defects.
   CONCRETE POURING:
   Notify the Hawaiian Electric Co. Ltd. Engineering Department 24 hours before pouring any concrete. All concrete shall be poured in the presence of H.E.CO. Engineer or its representative.
3. REINFORCING, round deformed bars, new billet stock intermediate grade ASTM A15.
4. FORMS, form handhole to size and shape as shown. Exterior face of handhole wall shall be formed except,
   A) Excavation in solid material such as coral or rock-neat cut, no forms required.
   B) Excavation in solid material other than coral or rock-lining such as salvaged corrugated iron, canec etc. shall be used.
5. PULLING EYE INSERTS:
   For location and number required, see duct entrance plan of project concerned.
6. DRAINAGE: Slope floor down ½" to sump.
7. Slope of top of manhole. See plan of project concerned.
8. FINISH STEEL WORK:
   Channel frames, lifting devices for removable concrete slabs shall be HOT DIP GALVANIZED AFTER FABRICATION.
9. EXCAVATION:
   Excavate for handhole to accurate alignment grades and dimensions as shown on drawing. All excavation must be approved by the Engineering Department, the Hawaiian Electric Co., Ltd., before any concrete is poured. All excess cut shall be backfilled with concrete or rock.
10. BACKFILL:
    Remove all debris before backfilling. Backfill in accordance with latest specifications of and subject to approval of State Highway or City and County of Honolulu whichever the case maybe unless otherwise directed.
11. For duct line construction standards see H.E.CO. Dwg. U-18585, revision #2 and specs sheet U-18585A.
12. DUCTS: For size, location and number required see duct entrance plan of project concern.
13. ALL MATERIALS SHALL BE NEW AND SHALL BE MANUFACTURED IN THE UNITED STATES OF AMERICA.
14. The general conditions of specification sheet 18244 Z shall govern throughout the entire work.

APPROVED:
PRINCPL. DISTR. ENGR. H.E. CO., LTD.
DATE: 2/26/64

STATE OF HAWAII
DEPARTMENT OF TRANSPORTATION
HIGHWAYS DIVISION

STANDARD DETAILS

DUCT ENTRANCE, FUTURE DUCT KNOCKOUT, DUCT WINDOW, PULLING EYE INSERT, SUMP

KAMEHAMEHA HIGHWAY
MOANALUA ROAD
Scales: As Noted

PROJ. No. F-090-1(4)
PROJ. No. SU-0720 (6)
Date: Dec. 1963

SHEET NO. 15 OF 15 SHEETS

119