FED. ROAD DIST. NO.	STATE	FED. AID PROJ. NO.	FISCAL YEAR	SHEET NO.	TOTAL SHEETS
	HAWAII	HAW FA-F020 (24)	67		70

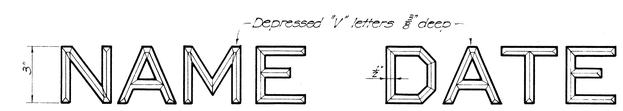

DETAIL OF LETTERS AND FIGURES AT BOTH APPROACHES

NOTE: *Name of stream to be placed in left end post panels and date in right post panels on entering bridge using modified block letters 3" in height.*

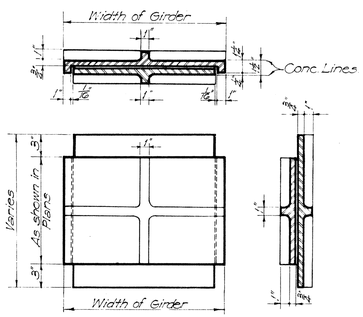

EXPANSION PLATES

Scale: 1½" = 1'-0"

NOTE! *Plates to be of Phosphor Bronze conforming to A.S.T.M., B22, Class C. Contact areas to have medium planed finish with finishing strokes parallel to longitudinal direction of bridge.*

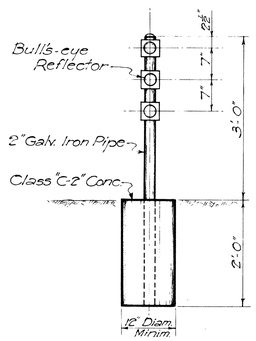

ST'D. REFLECTOR POST

Scale: 3/4" = 1'-0"

GENERAL NOTES

CONCRETE: *Class of concrete to be used in different parts of the structure are as noted on the plans.*

REINFORCING STEEL: *Intermediate grade. All steel to be round or square deformed bars of approved design. All dimensions relating to reinforcing are to centers of bars unless otherwise noted.*

Splicing of reinforcing other than main deck slab, girder and frame bars shall be done by lapping 40 diameters. Splices are to be staggered. Splices in main girder and frame bars are permitted only in bars exceeding 60'-0" in length at points to be indicated by the Engineer. These splices to be electrically arc welded according to detail and specifications. No allowance will be made in the quantities for extra weight of steel required for splices not shown on the plans.

Minimum spacing between parallel bars shall be 2½ times the diameter of round or 3 times the side dimension of square bars, but in no case shall the clear distance between the bars be less than 1½ times the maximum size of the coarse aggregate.

Minimum covering, measured from the surface of the concrete to the face of any reinforcing bar, shall be not less than 2 inches except in slabs where the minimum covering shall be 1 inch. In the footings of abutments and retaining walls and in piers the minimum covering shall be 3 inches. In work exposed to the action of sea water the minimum covering shall be 4 inches except in precast concrete piles where a minimum of 3" may be used.

WATERPROOFING: *Apply waterproofing as specified in Section 34, Pamphlet "N" of the Specification, and as shown in the plans. Waterproofing is incidental to the concrete and will not be paid for separately.*

CONSTRUCTION JOINTS: *All construction joints to have surface roughened and 1:2 cement grout applied immediately before the second pour. Construction joints to be located at places indicated in the plans.*

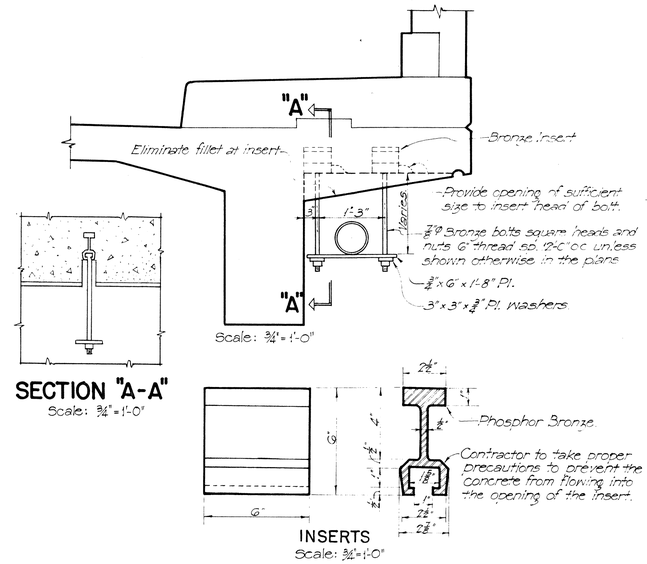

DETAIL OF PIPE HANGERS AND INSERTS

NOTE! *Inserts, bolts, plates, nuts & washers to be Phosphor Bronze conforming to the A.S.T.M. Standards, Serial Designation B22 or the latest revision thereof, and shall be Class "D" grade.*

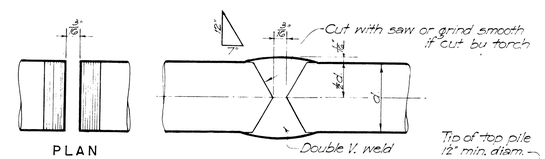

REINFORCING BAR SPLICE

Scale: Full Size

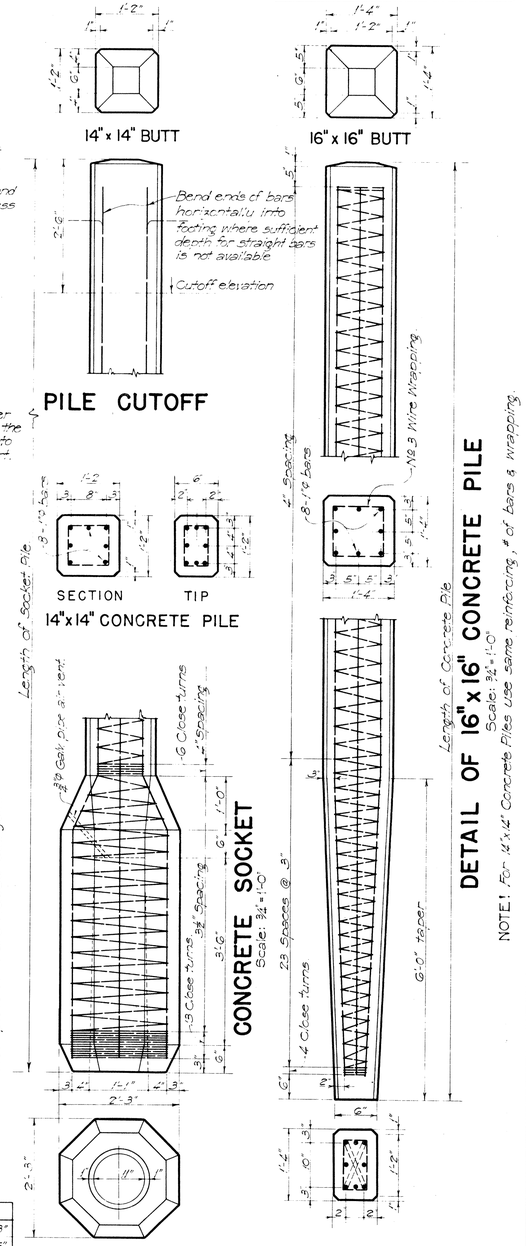

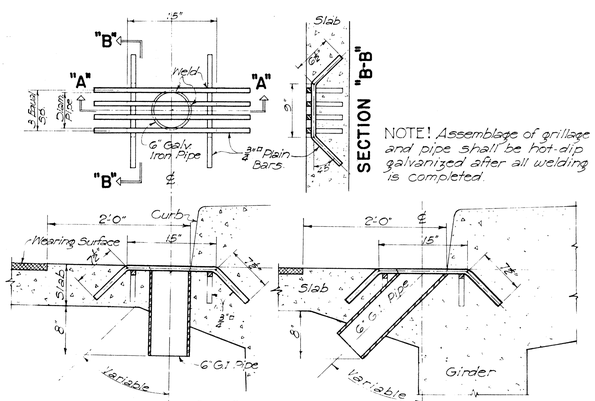

NOTE! *Assemblage of grillage and pipe shall be hot-dip galvanized after all welding is completed.*

SECTION "A-A"

SECTION "A-A"

DRAINAGE DETAIL

Scale: 1" = 1'-0"

GUARDRAIL OFFSET

X	Y W=3'	W=4'	W=5'	W=6'	W=7'	W=8'
12.5	0.19	0.16	0.14	0.12	0.09	0.08
25.0	0.75	0.64	0.55	0.49	0.36	0.30
37.5	1.69	1.44	1.25	1.10	0.78	0.72
50.0	3.00	2.56	2.22	1.96	1.38	1.28
62.5		4.00	3.47	3.06	2.16	2.00
75.0			5.00	4.41	3.11	2.88
87.5				6.00	4.23	3.92
100.0					5.53	5.12
112.5					7.00	6.48
125.0						8.00

W = Guardrail flare
X = Distance from post at bridge to offset points
Y = Guardrail flare offset

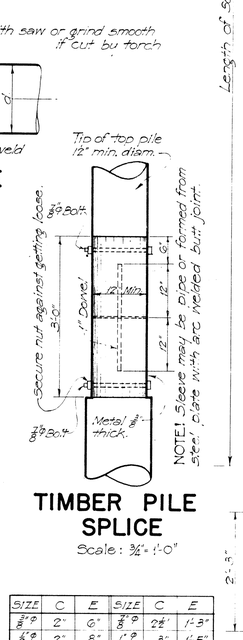

TIMBER PILE SPLICE

Scale: 3/4" = 1'-0"

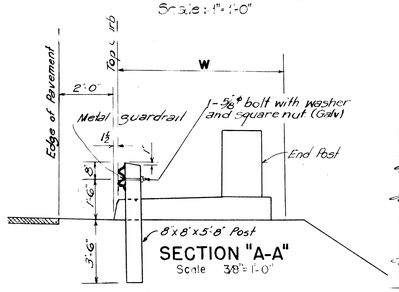

SECTION "A-A"

Scale 3/8" = 1'-0"

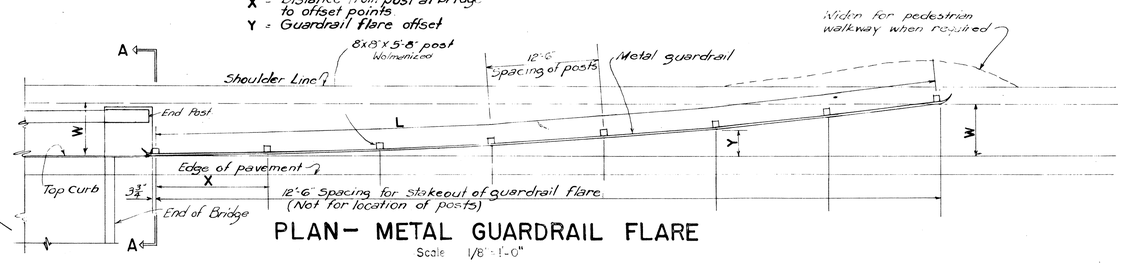

PLAN- METAL GUARDRAIL FLARE

Scale 1/8" = 1'-0"

SIZE	C	E	SIZE	C	E
3/8" Φ	2"	6"	3/4" Φ	2 1/4"	1'-3"
1/2" Φ	2"	8"	1" Φ	3"	1'-5"
5/8" Φ	2 1/4"	11"	1 1/8" Φ	3"	1'-7"
3/4" Φ	2 1/2"	1'-1"	1 1/4" Φ	3"	1'-9"

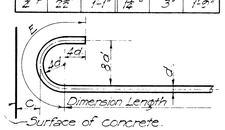

HOOK DETAIL

TERRITORIAL HIGHWAY DEPARTMENT
TERRITORY OF HAWAII

STANDARD BRIDGE DETAILS

Scales as Noted

APPROVED BY: _____
TERRITORIAL HIGHWAY ENGINEER.

SHEET Nº OF SHEETS

5382.27

ORIGINAL PLAN	SURVEY PLOTTED BY	DATE
	DESIGN BY	
	DRAWN BY	
	TRACED BY	
	QUANTITIES BY	
	QUANTITIES CHECKED BY	
NOTE BOOK No.	CHECKED BY	