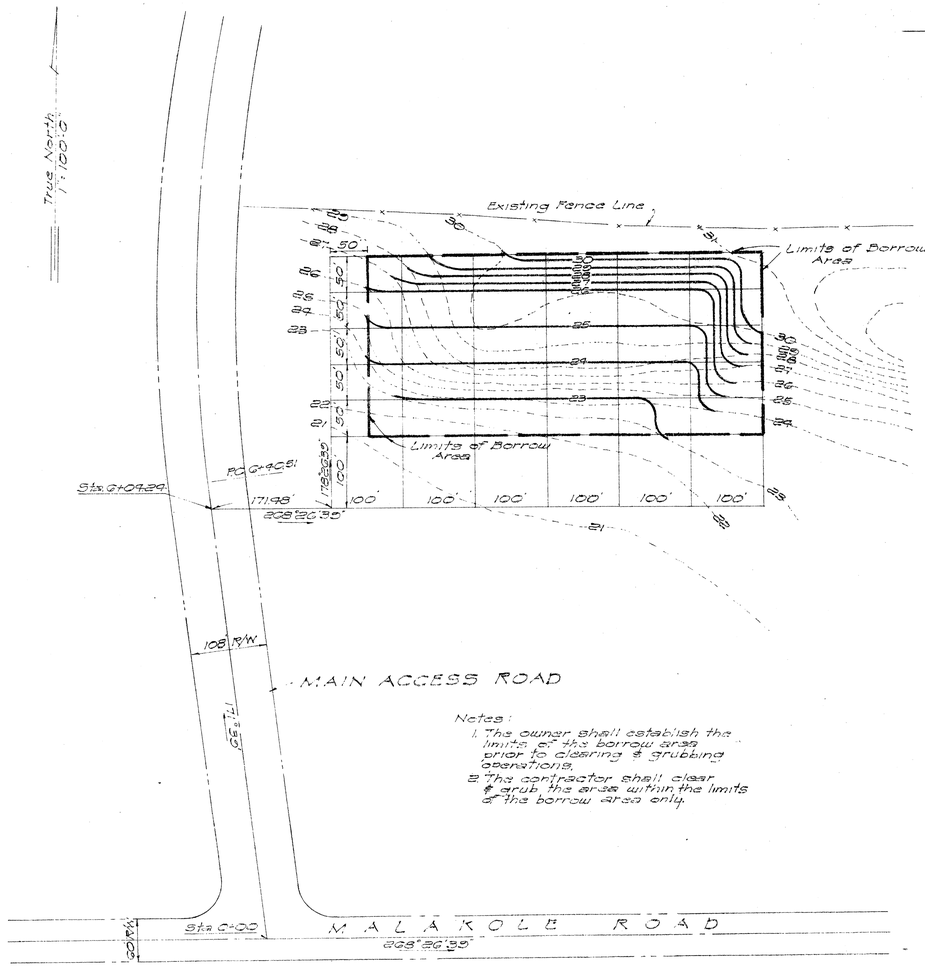

PLAN OF BORROW AREA

Scale 1" = 100'-0"

Notes:

1. The owner shall establish the limits of the borrow area prior to clearing & grubbing operations.
2. The contractor shall clear & grub the area within the limits of the borrow area only.

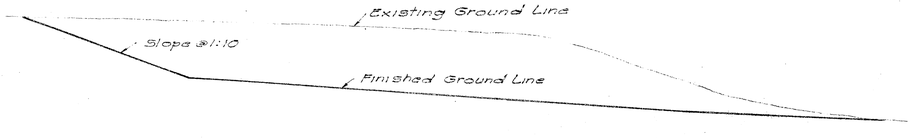

TYPICAL SECTION

Scale: Horizontal 1" = 20'-0"
Vertical 1" = 5'-0"

Note: Top of Manhole Covers shall be adjusted to the finished grade shown on the Plan-Profile and Cross Section Sheets by extending or cutting the 10" Concrete Pipe as required and relaying Frame and Base.

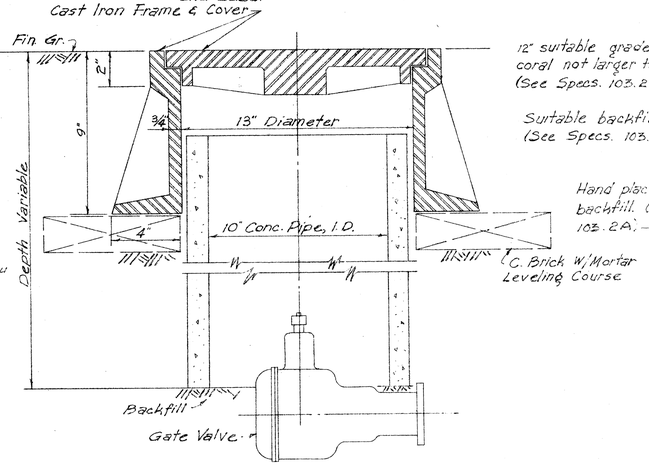

GATE VALVE DETAIL

(FOR ADJUSTMENT OF TOP OF M.H. FRAME & COVER)

Scale 3" = 1'-0"

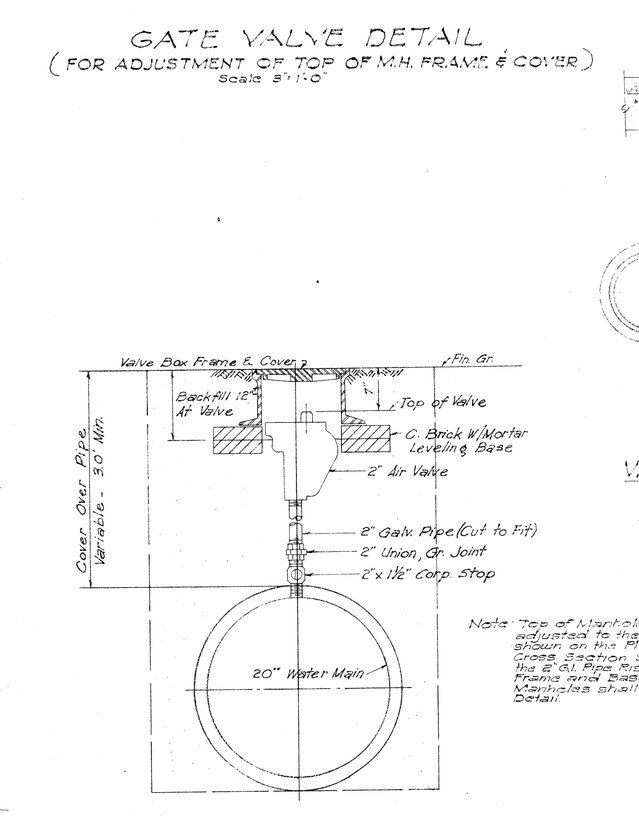

Note: Top of Manhole Covers shall be adjusted to the finished grade shown on the Plan-Profile and Cross Section Sheets by adjusting the 2" G.I. Pipe Riser and relaying Frame and Base. The adjusted Manholes shall conform to this Detail.

AIR VALVE DETAIL

Scale 1" = 1'-0"

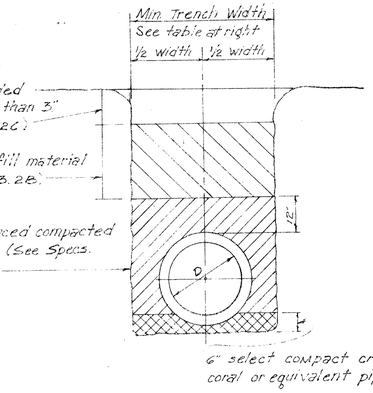

TRENCH WIDTH	
PIPE SIZE	MIN. WIDTH*
18"	3'-0"
24"	4'-0"
36"	5'-4"
48"	6'-8"

* Minimum width for single culvert - add 1½ D for each addition culvert where multiple culverts are used.

TYPICAL TRENCH DETAIL

SCALE: 1/2" = 1'-0"

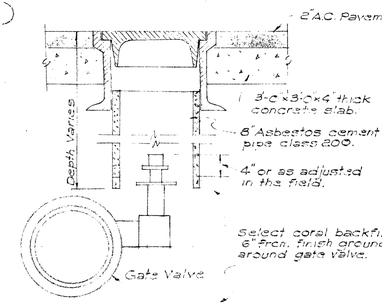

VALVE BOX DETAIL

Not to scale

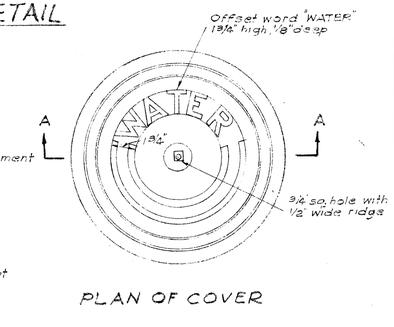

PLAN OF COVER

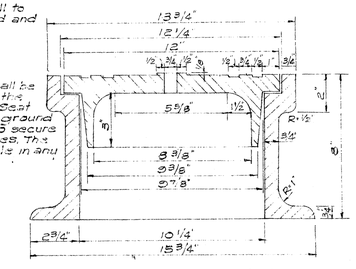

Note: All castings shall be made accurately to the dimensions shown. Seat and cover shall be ground where necessary to secure flat and true surfaces. The cover shall not rattle in any position.

SECTION A-A
CAST IRON FRAME & COVER
(FOR VALVE BOXES)

Not to scale

REV.	DATE	BRIEF	MADE BY	APP'RD.
5	4/18/61	Valve Box Detail Added	R.Y.	

TRUSTEES OF THE ESTATE OF JAMES CAMPBELL
HONOLULU, HAWAII

JAMES CAMPBELL INDUSTRIAL PARK
MAIN ACCESS ROAD

MISCELLANEOUS DETAILS

Acting DIRECTOR, DIVISION OF ENGINEERING — DATE 11/17/60

APPROVED ASS'T. CHIEF ENGINEER, BWS — DATE 3/2/61

Plans By Harland Bartholomew & Associates

APPROVED July 15/60 DATE — REGISTERED ENGINEER CERTIFICATE NO. 901