FED. ROAD DIST. NO.	STATE	FED. AID PROJ. NO.	FISCAL YEAR	SHEET NO.	TOTAL SHEETS
HAWAII	HAW.	STP-093-1(026)	2016	49	110

INDEX TO DRAWINGS

GENERAL NOTES

DESIGN SPECIFICATIONS:

1. AASHTO LRFD Bridge Design Specifications, 7th Edition 2014, including all interim revisions.
2. State of Hawaii, Department of Transportation, Highways Division, "Design Criteria for Bridges and Structures", August 8, 2014.

CONSTRUCTION SPECIFICATIONS:

1. Hawaii Standard Specifications for Road and Bridge Construction 2005, including Special Provisions.
2. Bridge Welding Code -- AWS D1.5M/D1.5:2010.
3. Standard symbols for welding, brazing and nondestructive examination, AWS A2.4:2007.

MATERIALS:

1. Concrete: 4,000 psi, unless otherwise specified.
2. Concrete Admixtures: See Special Provisions
3. Concrete for bridges, bridge rails, concrete barriers, retaining walls and transitions shall meet the requirements of Section 601, Structural Concrete.
4. A shrinkage-reducing admixture (SRA), Tetraguard AS20, manufactured by BASF, or Eclipse, Manufactured by W.R. Grace & Co., or approved equal shall be added to the concrete. The minimum dosage requirement shall be 128 ounces per cubic yard of concrete. The concrete shall have a minimum shrinkage strain of 0.00006 at 28-days and 0.000145 at 56-days according to ASTM C512
5. A corrosion inhibitor amine carboxylate water-based admixture shall be added to the concrete. The minimum dosage shall be 1.5 pints per cubic yard of concrete

REINFORCING STEEL:

1. Deformed and Plain Carbon-Steel Bars for Concrete Reinforcement shall meet the requirements of AASHTO M 31M/M 31-10 Grade 60. (ASTM A615/A615M-09 Grade 60).
2. Deformed and Plain Carbon-Steel Bars for Concrete Reinforcement to be spliced by welding or otherwise welded shall meet the requirements of AASHTO M 31M/M 31-10 Grade 60. (ASTM A615/A615M-09 Grade 60) and meet the requirements of ASTM A706/A706M-09b.

STRUCTURAL STEEL:

1. All structural steel shapes, plates, bars and assemblies shall be hot-dipped galvanized after fabrication.
2. Hot-Dip Galvanizing for structural iron and steel products made from rolled, pressed and forged shapes, castings, bars and plates, including unfabricated and fabricated products, shall conform to ASTM A123/A123M-09 (AASHTO M 111M/M 111-11).
3. Structural Steel Plates and Bars shall conform to ASTM A36/A36M-08.
4. W-Beam Structural Steel Shapes shall conform to ASTM A992/A992M-11.

STRUCTURAL STEEL (CONTINUED):

5. HSS Shapes (Round and Rectangular) shall conform to ASTM A500/A500M-10b Grade B.
6. Bolts (Hex or Heavy Hex Bolts) shall conform to ASTM A307-10 unless otherwise specified and hot dip galvanized in accordance to ASTM F2329.
7. High Strength Bolts (Heavy Hex Structural Bolts) shall conform to ASTM A325/A325M-09 Type 1 unless otherwise specified and hot dip galvanized in accordance to ASTM F2329.
8. Nuts for ASTM A307 (Hex) bolts shall conform to ASTM A563-07a Hex Grade A and hot dip glavanized in accordance to ASTM F2329.
9. Nuts for ASTM A307 (Heavy Hex) bolts shall conform to ASTM A563-07a Heavy Hex Grade A and hot dip galvanized in accordance to ASTM F2329.
10. Nuts for ASTM A325 bolts shall conform to ASTM A563-07a Grade DH and hot dip galvanized in accordance to ASTM F2329.
11. Washers for bolts shall conform to ASTM F436-11 Type 1 and hot dip galvanized accordance to ASTM F2329.
12. Threaded rods shall conform to ASTM A449-10 Type 1 and hot dip galvanized in accordance to ASTM F2329. Nuts for anchor rods shall conform to ASTM F1554-07a Section 6.6.1

MISCELLANEOUS MATERIALS:

1. Preformed Expansion Joint Filler for concrete (bituminous type) shall conform to AASHTO M 33-99 (2012). ASTM D 994-98 (2010)

CONSTRUCTION REQUIREMENTS:

1. All work on bridges shall be done from the top of the bridge. No work shall be done in the stream, and no equipment shall be allowed in the stream. All scaffoldings and frameworks shall be supported from the top of the bridge.
2. Appropriate BMPs shall be installed to catch debris/concrete from falling into stream or ocean.
3. Roughen existing concrete surface to 1/4" amplitude when new concrete is to be placed on/adjacentto existing concrete. Sawcut existing concrete 1/2" where possible.

ORIGINAL PLAN	SURVEY PLOTTED BY	XXX	DATE
	DRAWN BY		XXX XXX
	TRACED BY		XXX XXX
NOTE BOOK	DESIGNED BY	XXX	XXX XXX
	QUANTITIES BY	XXX	XXX XXX
No. Q1.dgn	CHECKED BY	XXX	XXX XXX

STATE OF HAWAII
DEPARTMENT OF TRANSPORTATION
HIGHWAYS DIVISION

INDEX AND GENERAL NOTES

FARRINGTON HIGHWAY RESURFACING
Vicinity of Kili Drive to Satellite Tracking Station Road
Federal Aid Project No. STP-093-1(026)

Scale: As Noted Date: Apr, 2016

FED. ROAD DIST. NO.	STATE	FED. AID PROJ. NO.	FISCAL YEAR	SHEET NO.	TOTAL SHEETS
HAWAII	HAW.	STP-093-1(026)	2016	50	110

SYMBOLS AND ABBREVIATIONS

Detail or Section designation — XXX

Sheet No. Section is cut or Detail Location — XXX

Sheet No. Detail is drawn — XXX

(X) - ℄ Bearing Abutment Seat Line

⟨X⟩ - ℄ Bearing Pier Seat Line

ø - Diameter

& - And

w4 - 4" Waterline

AB	Anchor Bolt
Abut.	Abutment
AASHTO	American Association of State and Highway Transportation Officials
ASTM	American Society for Testing and Materials
AWS	American Welding Society
az.	Azimuth
℄	Baseline
B.F., b.f.	Back Face
Bm.	Beam
B, Bot., Bott.	Bottom
Brg., Brgs.	Bearing, Bearings
℄	Center Line
Cl., Clr.	Clear
Conc.	Concrete
Const.	Construction
Contr.	Contraction
Cont.	Continuous
Det.	Detail
Dia., ø	Diameter
Dwg., Dwgs.	Drawing, Drawings
EA, Ea., ea.	Each
E.F., e.f.	Each Face
E.P.	Edge of Pavement
Eq.	Equal
Exist., exist'g	Existing
F.F., f.f.	Front Face
Fin.	Finish
Fin. Gr.	Finish Grade
Ftg.	Footing
Gr.	Grade
Horiz.	Horizontal
H.S.	High Strength
HSS	High Strength Steel
Hwy.	Highway
Jt.	Joint
LBS., lb., lbs.	Pound, Pounds
Lc	Length of Curve
Lg.	Long
Max.	Maximum
Met.	Metal
Min.	Minimum
Mod.	Modified
No., #	Number
N.T.S.	Not To Scale
o.c.	On Center
p.c.	Point of Curve
PL	Plate
Pvmt.	Pavement
R	Radius
Rdwy	Roadway
Ref.	Reference
Sect.	Section
Sht.	Sheet
Spcg.	Spacing
Spcs.	Spaces
sq.	Square
Sta.	Station
Std.	Standard
Stirr.	Stirrup
Symm.	Symmetrical
T&B	Top & Bottom
Typ.	Typical
Vert.	Vertical
w/	With
w#	Water Line # inches diameter
W.W.	Wingwall

ORIGINAL PLAN	SURVEY PLOTTED BY XXX	DATE
	DRAWN BY XXX	XXX 1992
	TRACED BY	
NOTE BOOK	DESIGNED BY XXX	XXX 1992
	QUANTITIES BY XXX	XXX 1992
CenNotes001a	CHECKED BY XXX	XXX 1992

STATE OF HAWAII
DEPARTMENT OF TRANSPORTATION
HIGHWAYS DIVISION

SYMBOLS AND ABBREVIATIONS

FARRINGTON HIGHWAY RESURFACING
Vicinity of Kili Drive to Satellite Tracking Station Road
Federal Aid Project No. STP-093-1(026)

Scale: As Noted — Date: Apr. 2016

SHEET No. Q2 OF 34 SHEETS

FED. ROAD DIST. NO.	STATE	FED. AID PROJ. NO.	FISCAL YEAR	SHEET NO.	TOTAL SHEETS
HAWAII	HAW.	STP-093-1(026)	2016	51	110

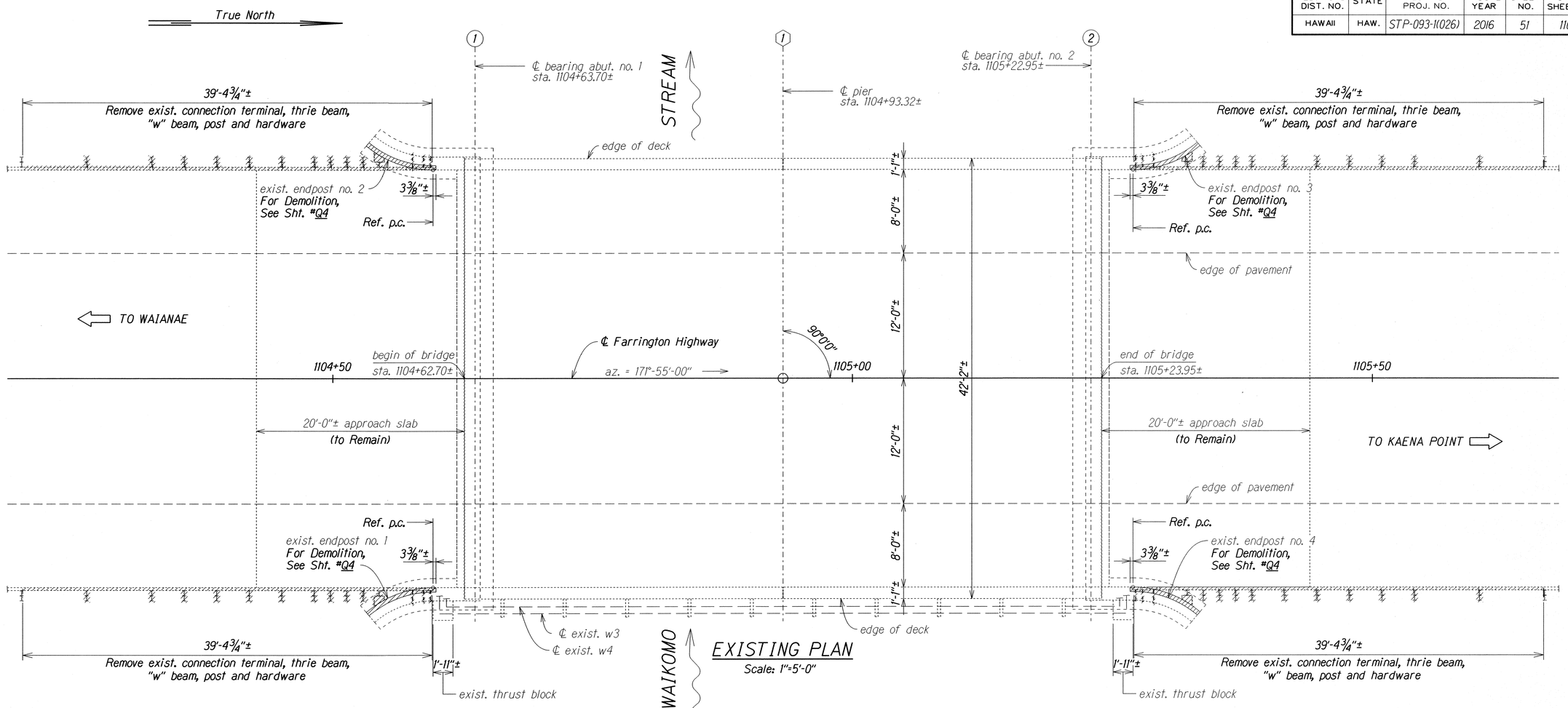

EXISTING PLAN

Scale: 1"=5'-0"

LEGEND

Hatched Area Indicates Limits of Removal

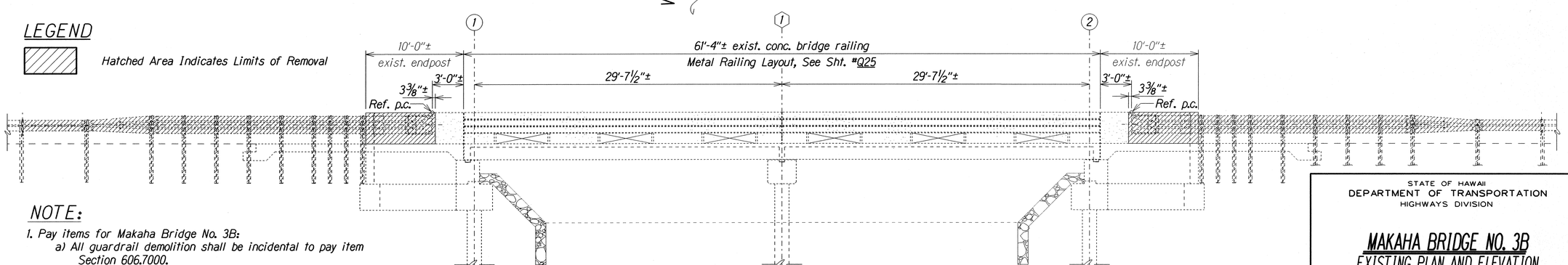

NOTE:

1. Pay items for Makaha Bridge No. 3B:
   a) All guardrail demolition shall be incidental to pay item Section 606.7000.
   b) All demolition other than guardrail shall be incidental to item Section 606.5100.

EXISTING ELEVATION

Scale: 1"=5'-0"

MAKAHA BRIDGE NO. 3B

ORIGINAL PLAN	SURVEY PLOTTED BY	XXX	DATE
	DRAWN BY		
	TRACED BY	XXX	XXX 1999
NOTE BOOK	DESIGNED BY	XXX	XXX 1999
	QUANTITIES BY	XXX	XXX 1999
N. 001.dgn	CHECKED BY	XXX	XXX 1999

STATE OF HAWAII
DEPARTMENT OF TRANSPORTATION
HIGHWAYS DIVISION

MAKAHA BRIDGE NO. 3B
EXISTING PLAN AND ELEVATION
FARRINGTON HIGHWAY RESURFACING
Vicinity of Kili Drive to Satellite Tracking Station Road
Federal Aid Project No. STP-093-1(026)

Scale: As Noted — Date: Apr, 2016

SHEET No. Q3 OF 34 SHEETS

FED. ROAD DIST. NO.	STATE	FED. AID PROJ. NO.	FISCAL YEAR	SHEET NO.	TOTAL SHEETS
HAWAII	HAW.	STP-093-1(026)	2016	52	110

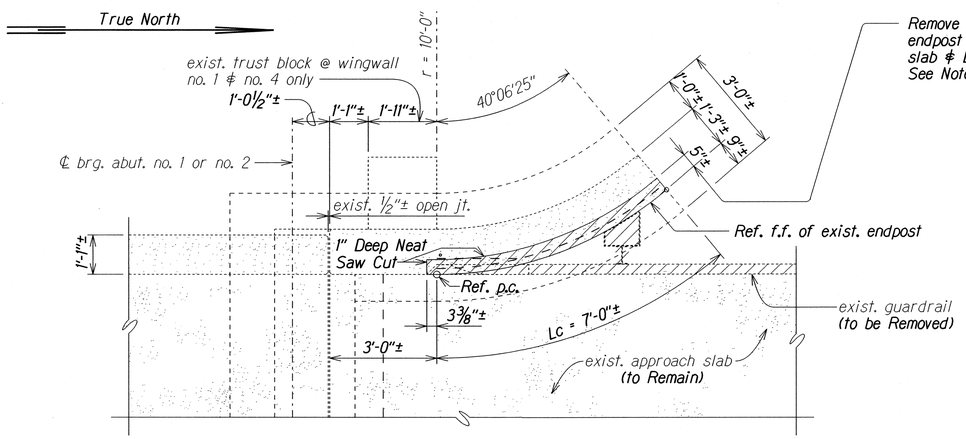

PLAN
Scale: ½"=1'-0"

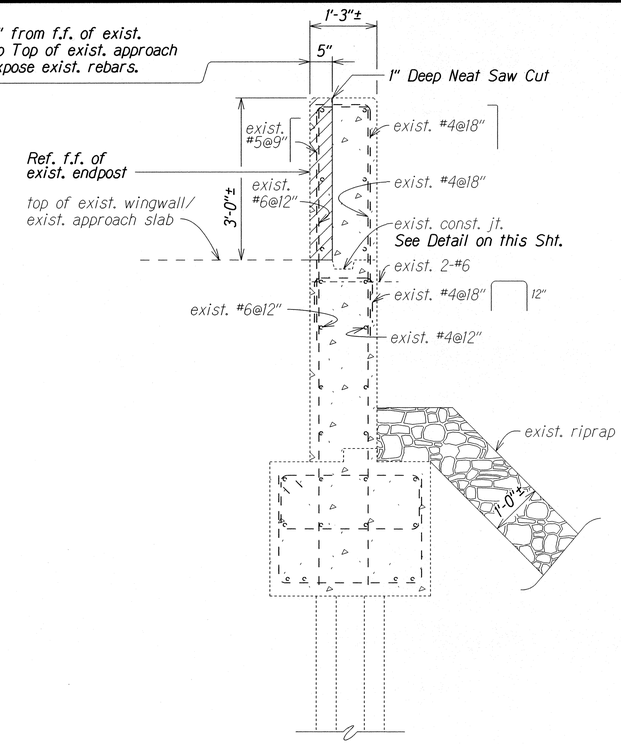

SECTION
Scale: ¾"=1'-0"

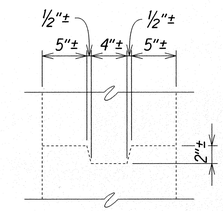

EXISTING CONSTRUCTION JOINT DETAIL
Scale: 1½"=1'-0"

NOTE:
1. Pay items for Makaha Bridge No. 3B:
   a) All guardrail domolition shall be incidental to pay item Section 606.7000.
   b) All demolition other than guardrail shall be incidental to item Section 606.5100.

Remove All exist. hardware, exist. terminal connection, exist. metal tapered box spacer block, exist. thrie beam, exist. guardrail post and exist. transition section

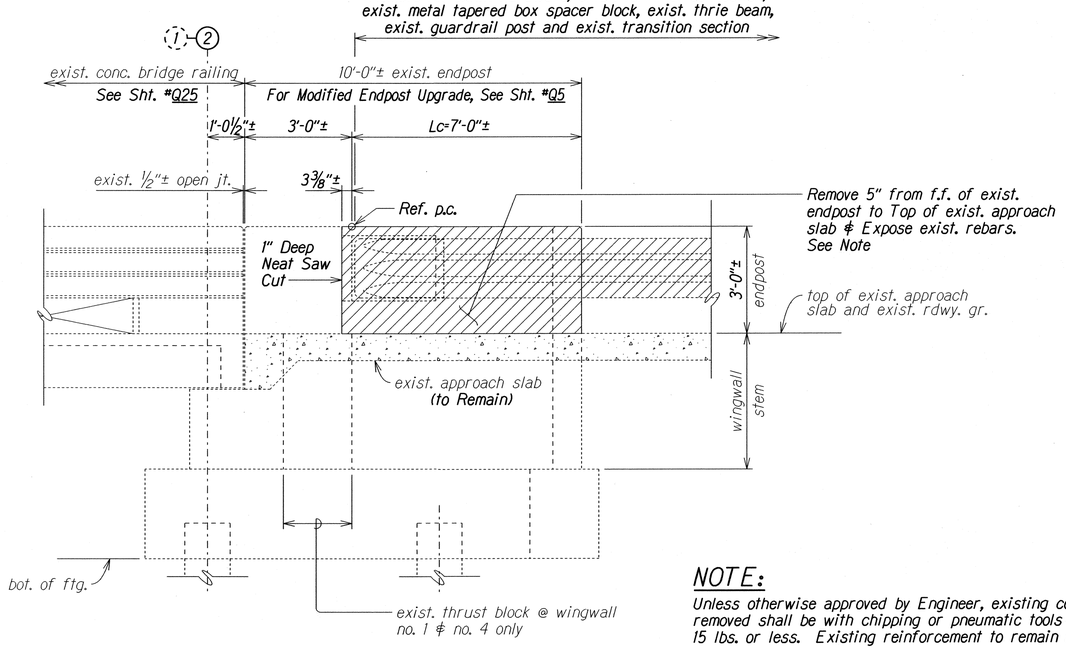

ELEVATION
Scale: ½"=1'-0"

NOTE:
Unless otherwise approved by Engineer, existing concrete to be removed shall be with chipping or pneumatic tools weighing 15 lbs. or less. Existing reinforcement to remain and undamaged.

LEGEND
Hatched Area Indicates Limits of Removal

DEMOLITION AT EXISTING ENDPOST NO. 3
ENDPOST NO. 1 SIMILAR
ENDPOST NOS. 2 & 4 SIMILAR EXCEPT OPPOSITE HAND

ORIGINAL PLAN	SURVEY PLOTTED BY XXX	DATE XXX 1991
	DRAWN BY XXX	
	TRACED BY XXX	XXX 1991
NOTE BOOK	DESIGNED BY XXX	XXX 1991
	QUANTITIES BY XXX	XXX 1991
No. 001b.dgn	CHECKED BY XXX	XXX 1991

STATE OF HAWAII
DEPARTMENT OF TRANSPORTATION
HIGHWAYS DIVISION

MAKAHA BRIDGE NO. 3B
DEMOLITION AT EXISTING ENDPOST NOS. 1, 2, 3 & 4
PLAN, ELEVATION, SECTION AND DETAIL
FARRINGTON HIGHWAY RESURFACING
Vicinity of Kiii Drive to Satellite Tracking Station Road
Federal Aid Project No. STP-093-1(026)

Scale: As Noted — Date: Apr, 2016

FED. ROAD DIST. NO.	STATE	FED. AID PROJ. NO.	FISCAL YEAR	SHEET NO.	TOTAL SHEETS
HAWAII	HAW.	STP-093-1(026)	2016	53	110

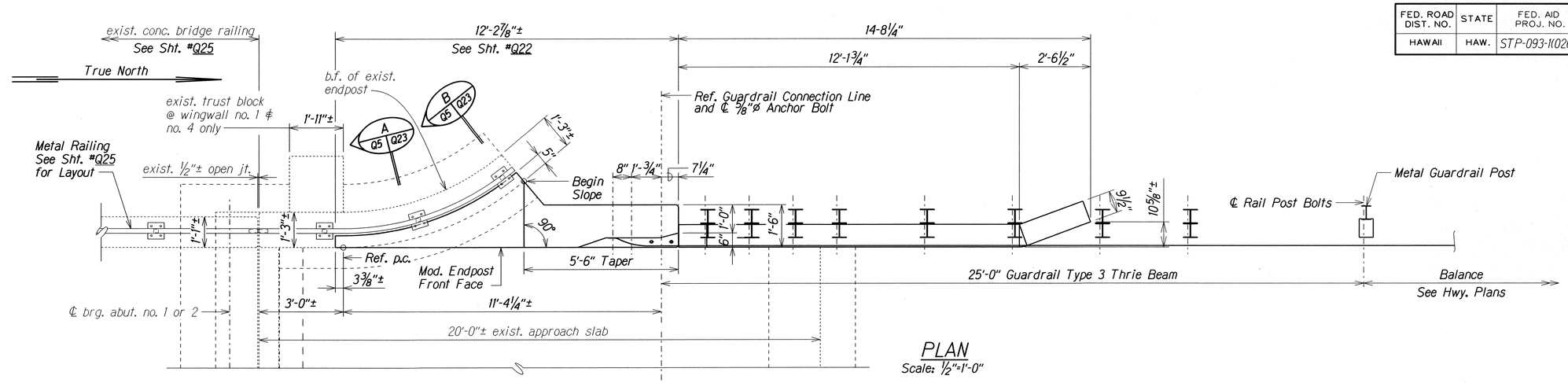

PLAN

Scale: ½"=1'-0"

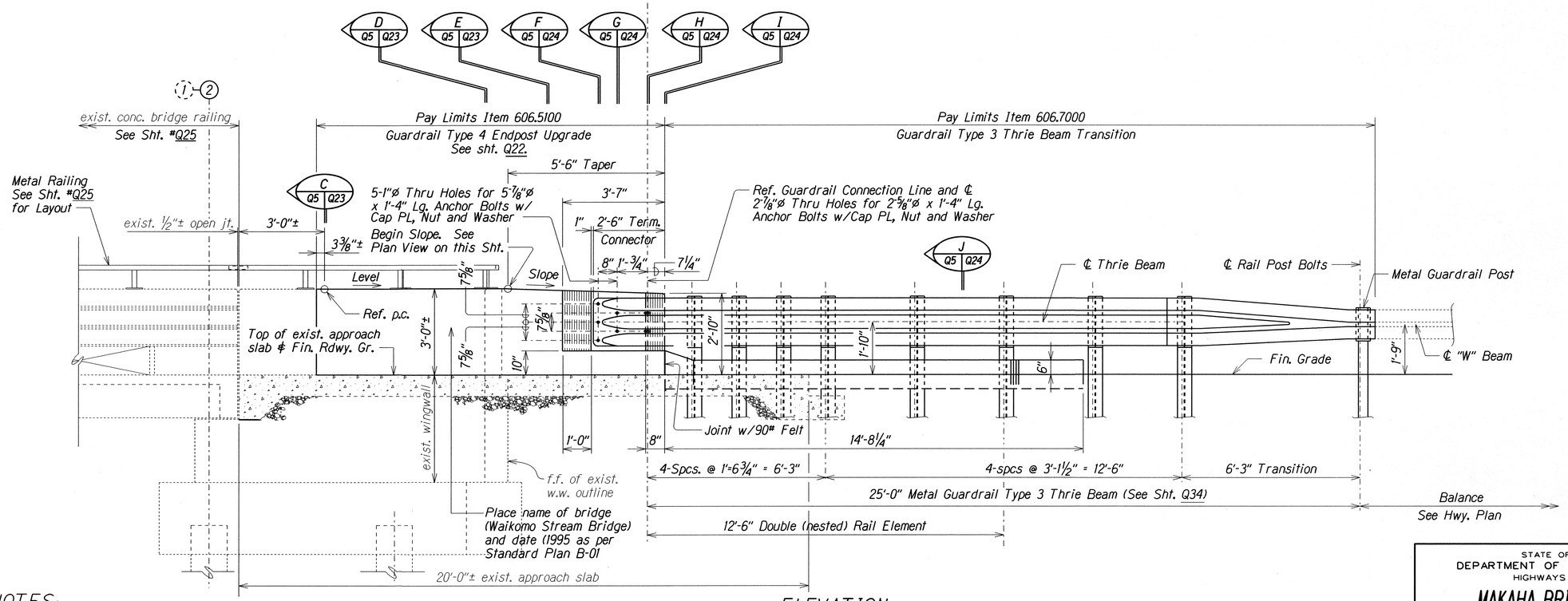

ELEVATION

Scale: ½"=1'-0"

NOTES:

1) See Sht. #Q34 for Metal Guardrail Type 3 Thrie Beam and Appurtenances Details.

2) Adjust Rebar Location to Clear Holes for Metal Guardrail Connection Anchor Bolts.

3) See Sht. #Q22 for Reinforcement in Plan & Elevation. See See Sht. #Q23 and #Q24 for Details.

MODIFIED ENDPOST NO. 3 UPGRADE CONNECTION

ENDPOST NO. 1 SIMILAR

ENDPOST NOS. 2 & 4 SIMILAR EXCEPT OPPOSITE HAND

ORIGINAL PLAN			DATE
	SURVEY PLOTTED BY	XXX	XXX 1999
	DRAWN BY		
	TRACED BY	XXX	XXX 1999
NOTE BOOK	DESIGNED BY	XXX	XXX 1999
	QUANTITIES BY	XXX	XXX 1999
No. 05.dgn	CHECKED BY	XXX	XXX 1999

STATE OF HAWAII
DEPARTMENT OF TRANSPORTATION
HIGHWAYS DIVISION

MAKAHA BRIDGE NO. 3B

MODIFIED ENDPOST NOS. 1, 2, 3 & 4 CONNECTIONS
PLAN AND ELEVATION
FARRINGTON HIGHWAY RESURFACING
Vicinity of Kili Drive to Satellite Tracking Station Road
Federal Aid Project No. STP-093-1(026)

Scale: As Noted — Date: Apr, 2016

SHEET No. Q5 OF 34 SHEETS

FED. ROAD DIST. NO.	STATE	FED. AID PROJ. NO.	FISCAL YEAR	SHEET NO.	TOTAL SHEETS
HAWAII	HAW.	STP-093-1(026)	2016	54	110

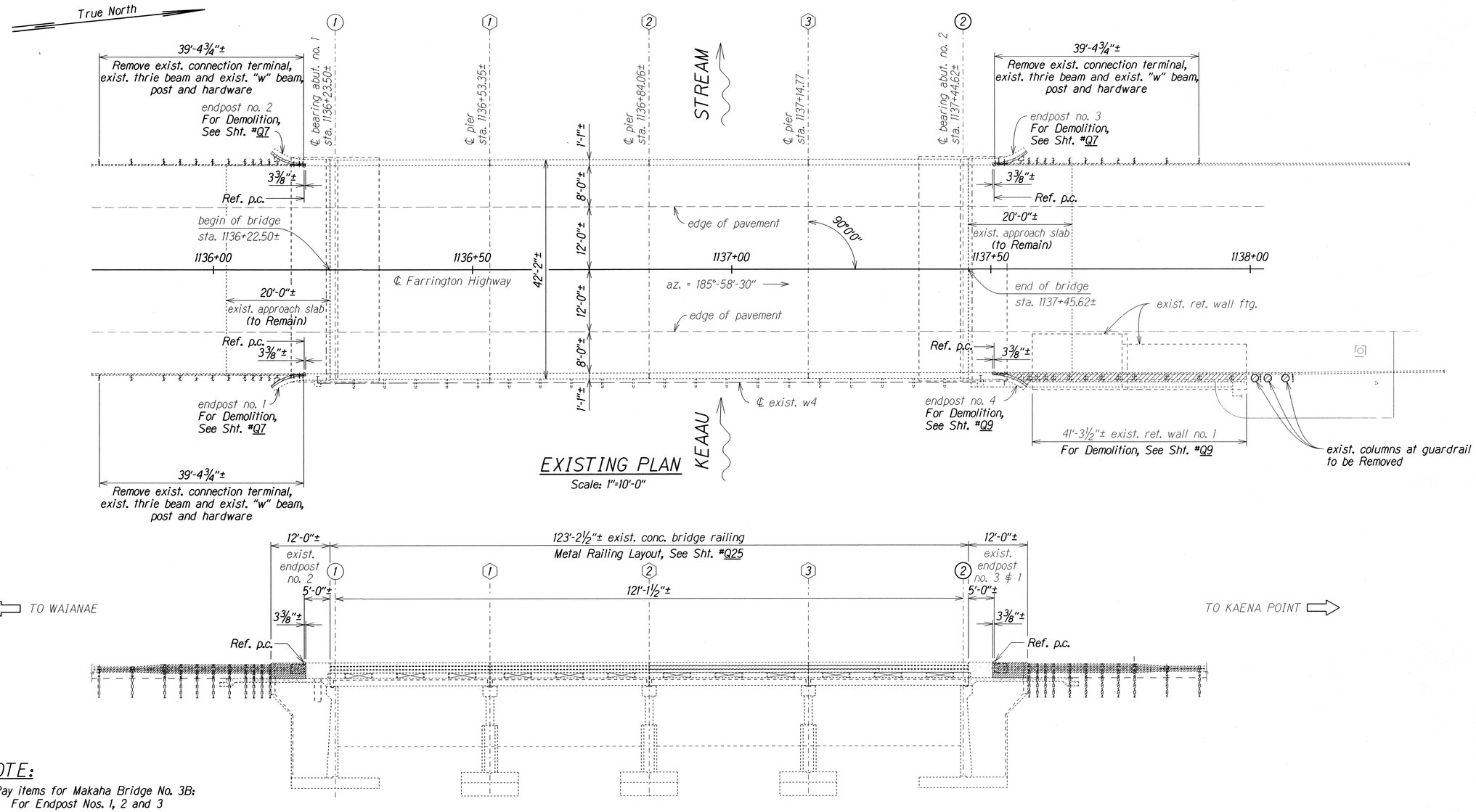

EXISTING PLAN

Scale: 1"=10'-0"

EXISTING ELEVATION

Scale: 1"=10'-0"

NOTE:

1. Pay items for Makaha Bridge No. 3B:
   For Endpost Nos. 1, 2 and 3
   a) All guardrail demolition shall be incidental to pay item Section 606.7000.
   b) All demolition other than guardrail shall be incidental to pay item Section 606.5200.
   For Endpost No. 4
   a) All Guardrail demolition shall be incidental to pay itam Section 606.7000.
   b) All demolition other than guardrail shall be incidental to pay item Section 606.6000.

LEGEND

Hatched Area Indicates Limits of Removal

MAKAHA BRIDGE NO. 4

ORIGINAL PLAN	SURVEY PLOTTED BY	XXX	DATE XXX XXX
	DRAWN BY		
	TRACED BY	XXX	XXX XXX
NOTE BOOK	DESIGNED BY	XXX	XXX XXX
No. Q6.dgn	QUANTITIES BY	XXX	XXX XXX
	CHECKED BY	XXX	XXX XXX

STATE OF HAWAII
DEPARTMENT OF TRANSPORTATION
HIGHWAYS DIVISION

MAKAHA BRIDGE NO. 4
EXISTING PLAN AND ELEVATION
FARRINGTON HIGHWAY RESURFACING
Vicinity of Kili Drive to Satellite Tracking Station Road
Federal Aid Project No. STP-093-1(026)

Scale: As Noted Date: Apr, 2016

SHEET No. Q6 OF 34 SHEETS

FED. ROAD DIST. NO.	STATE	FED. AID PROJ. NO.	FISCAL YEAR	SHEET NO.	TOTAL SHEETS
HAWAII	HAW.	STP-093-1(026)	2016	55	110

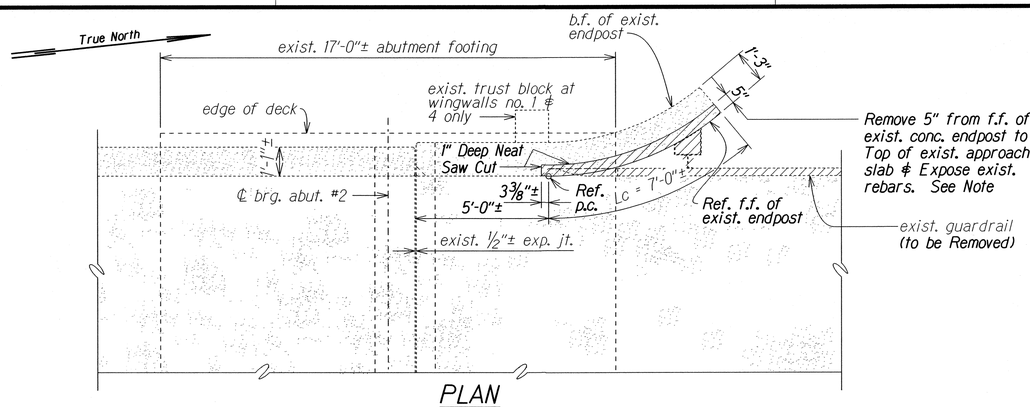

PLAN

Scale: ⅜"=1'-0"

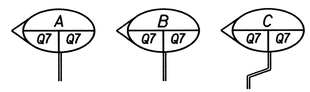

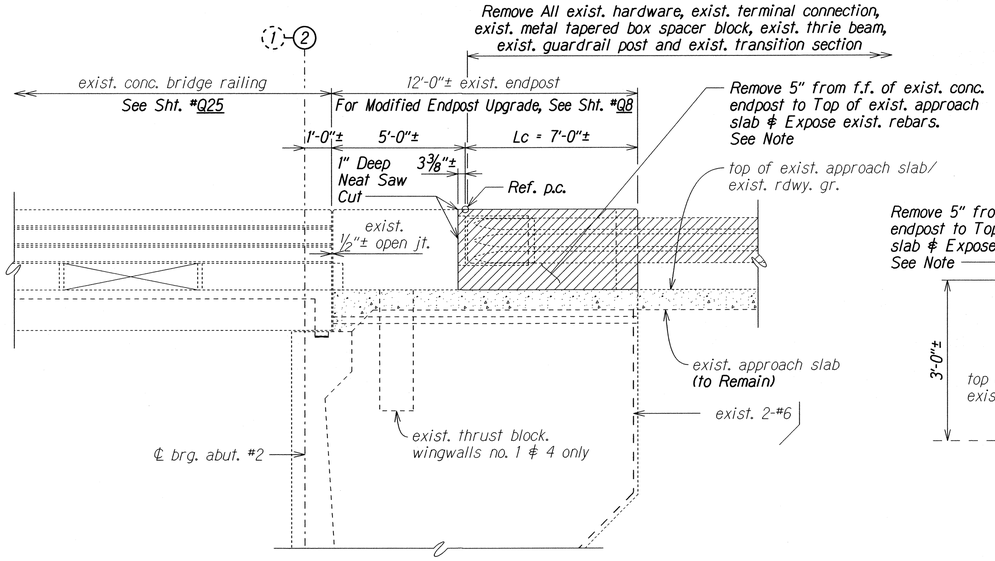

ELEVATION

Scale: ⅜"=1'-0"

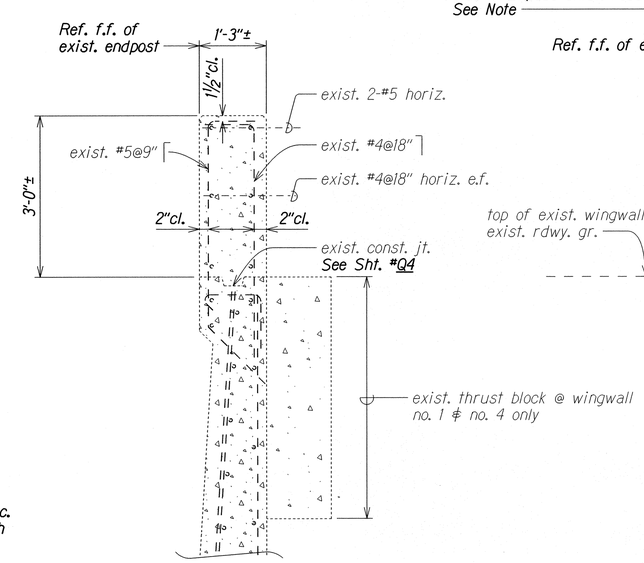

SECTION A Q7 Q7

Scale: ¾"=1'-0"

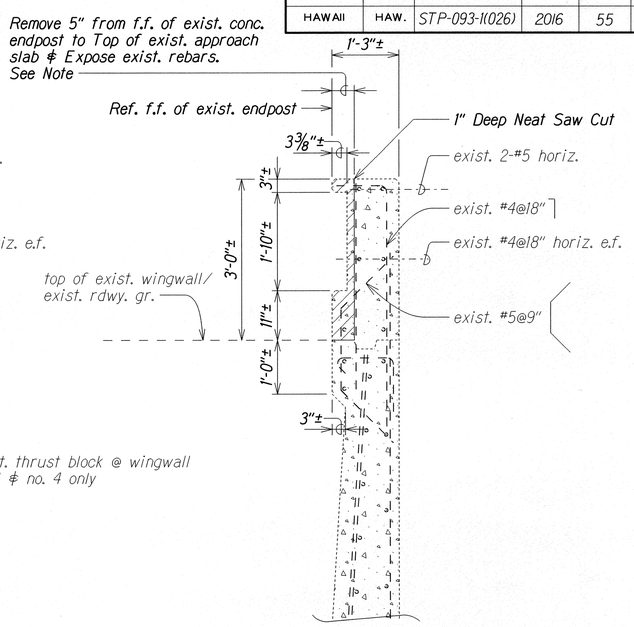

SECTION B Q7 Q7

Scale: ¾"=1'-0"

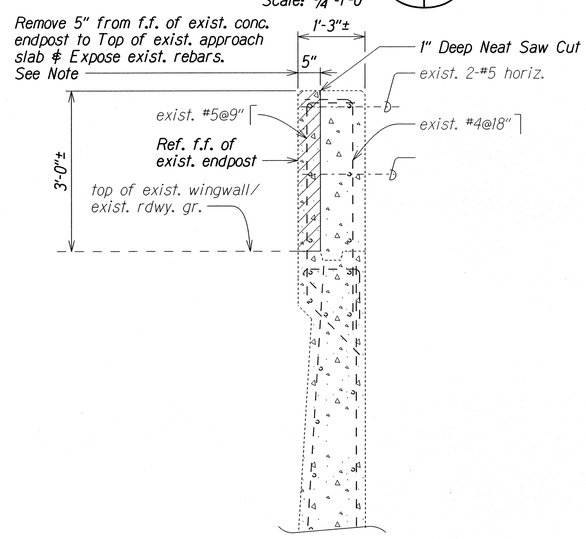

SECTION C Q7 Q7

Scale: ¾"=1'-0"

NOTE:

1. Unless otherwise approved by Engineer, existing concrete to be removed shall be with chipping or pneumatic tools weighing 15 lbs. or less. Existing reinforcement to remain and undamaged.
2. Pay items for Makaha Br. No. 4:
   a) All guardrail demolition shall be incidental to pay item Section 606.7000.
   b) All demolition other than guardrail shall be incidental to pay item Section 606.5200.

LEGEND

Hatched Area Indicates Limits of Removal

DEMOLITION AT EXISTING ENDPOST NO. 3

ENDPOST NO. 1 SIMILAR

ENDPOST NO. 2 SIMILAR EXCEPT OPPOSITE HAND

ORIGINAL PLAN	SURVEY PLOTTED BY XXX	DATE
	DRAWN BY	XXX XXX
	TRACED BY	
NOTE BOOK	DESIGNED BY XXX	XXX XXX
	REVIEWED BY XXX	XXX XXX
No. 07-09	QUANTITIES BY XXX	XXX XXX
	CHECKED BY XXX	

STATE OF HAWAII
DEPARTMENT OF TRANSPORTATION
HIGHWAYS DIVISION

MAKAHA BRIDGE NO. 4

DEMOLTION AT ENDPOST NO. 1, 2 & 3
PLAN, ELEVATION AND SECTIONS

FARRINGTON HIGHWAY RESURFACING
Vicinity of Kili Drive to Satellite Tracking Station Road
Federal Aid Project No. STP-093-1(026)

Scale: As Noted Date: Apr. 2016

FED. ROAD DIST. NO.	STATE	FED. AID PROJ. NO.	FISCAL YEAR	SHEET NO.	TOTAL SHEETS
HAWAII	HAW.	STP-093-1(026)	2016	56	110

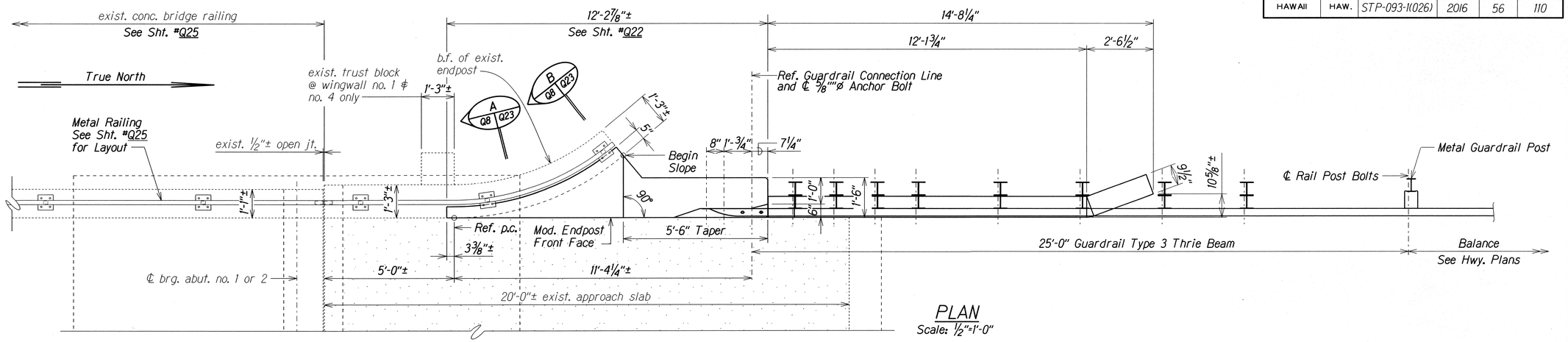

PLAN
Scale: ½"=1'-0"

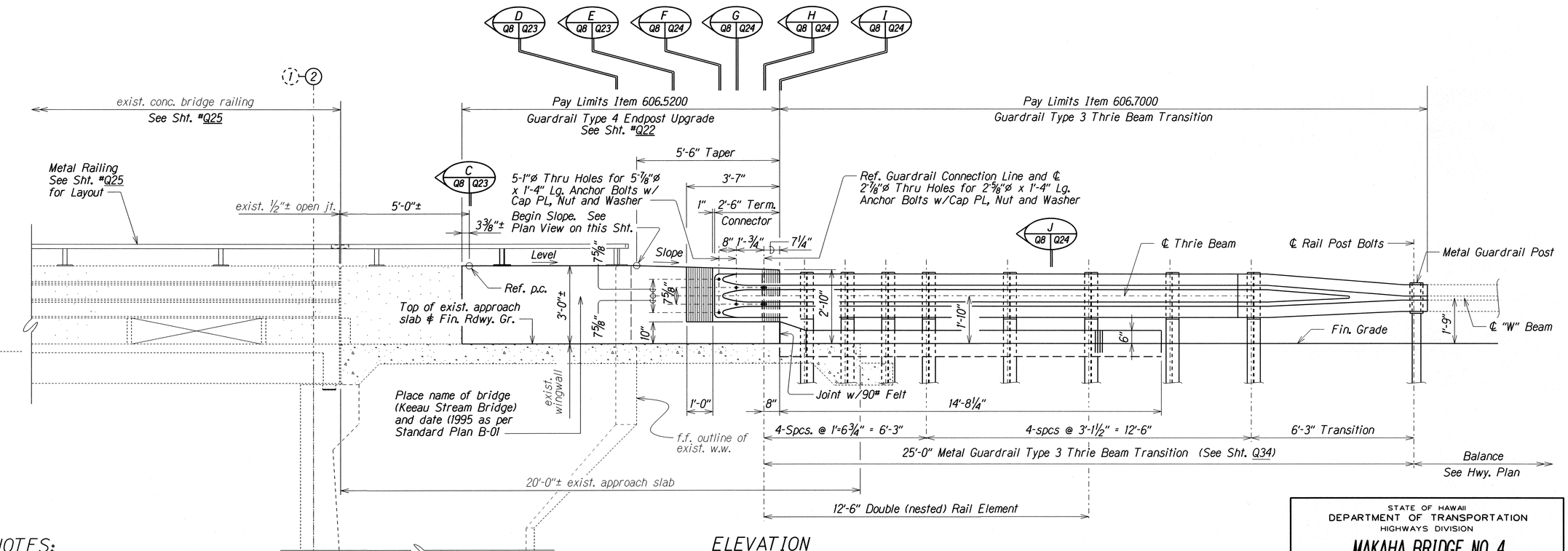

ELEVATION
Scale: ½"=1'-0"

NOTES:

1) See Sht. #Q34 for Metal Guardrail Type 3 Thrie Beam and Appurtenances Details.

2) Adjust Rebar Location to Clear Holes for Metal Guardrail Connection Anchor Bolts.

3) See Sht. #Q22 for Reinforcement in Plan & Elevation. See See Shts. #Q23 and #Q24 for Details.

MODIFIED ENDPOST NO. 3 UPGRADE CONNECTION

ENDPOST NO. 1 SIMILAR

ENDPOST NO. 2 SIMILAR EXCEPT OPPOSITE HAND

ORIGINAL PLAN	SURVEY PLOTTED BY XXX	DATE
	DRAWN BY	XXX XXX
	TRACED BY	XXX XXX
NOTE BOOK	DESIGNED BY XXX	XXX XXX
	TRACED BY XXX	XXX XXX
N. Q8.dgn	QUANTITIES BY XXX	XXX XXX
	CHECKED BY XXX	XXX XXX

STATE OF HAWAII
DEPARTMENT OF TRANSPORTATION
HIGHWAYS DIVISION

MAKAHA BRIDGE NO. 4

MODIFIED ENDPOST NOS. 1, 2 & 3 UPGRADE CONNECTIONS
PLAN AND ELEVATION
FARRINGTON HIGHWAY RESURFACING
Vicinity of Kili Drive to Satellite Tracking Station Road
Federal Aid Project No. STP-093-1(026)

Scale: As Noted Date: Apr. 2016

FED. ROAD DIST. NO.	STATE	FED. AID PROJ. NO.	FISCAL YEAR	SHEET NO.	TOTAL SHEETS
HAWAII	HAW.	STP-093-1(026)	2016	57	110

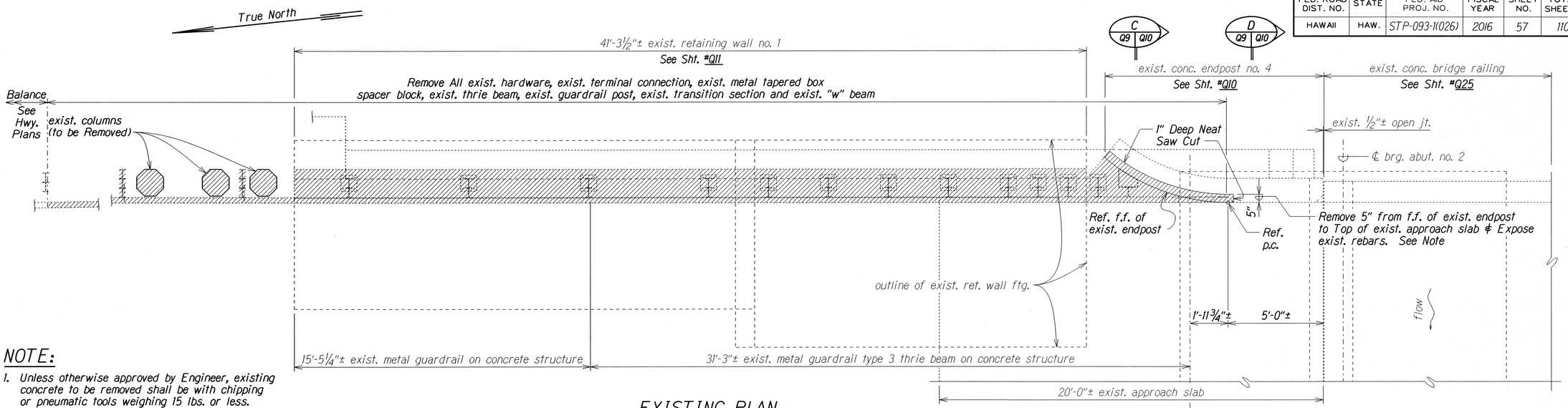

EXISTING PLAN

Scale: ⅜"=1'-0"

NOTE:

1. Unless otherwise approved by Engineer, existing concrete to be removed shall be with chipping or pneumatic tools weighing 15 lbs. or less. Existing reinforcement to remain and undamaged.
2. Pay items for Makaha Br. No. 4:
   a) All guardrail demolition shall be incidental to pay item Section 606.7000.
   b) All demolition other than guardrail shall be incidental to pay item Section 606.6000.

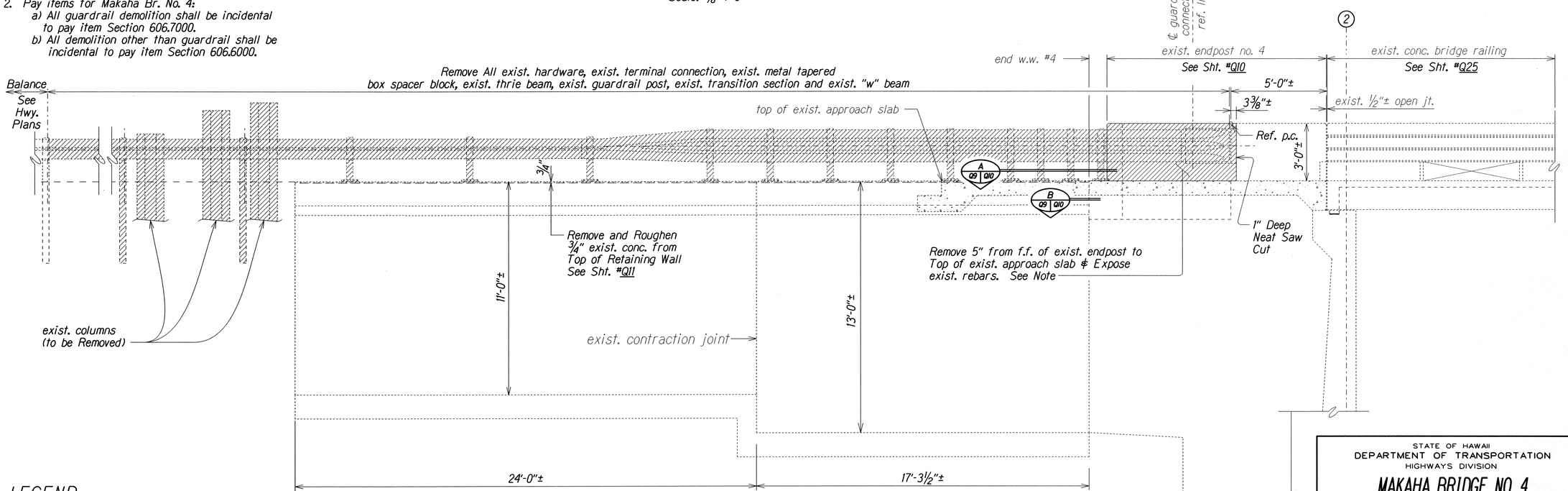

ELEVATION

Scale: ⅜"=1'-0"

LEGEND

Hatched Area Indicates Limits of Removal

DEMOLITION AT EXISTING ENDPOST NO. 4 AND RETAINING WALL NO. 1

ORIGINAL PLAN	SURVEY PLOTTED BY	XXX	DATE
	DRAWN BY		XXX XXX
	TRACED BY	XXX	XXX XXX
NOTE BOOK	DESIGNED BY	XXX	XXX XXX
	QUANTITIES BY	XXX	XXX XXX
No. 09.dgn	CHECKED BY	XXX	XXX XXX

STATE OF HAWAII
DEPARTMENT OF TRANSPORTATION
HIGHWAYS DIVISION

MAKAHA BRIDGE NO. 4

DEMOLITION AT EXISTING ENDPOST NO. 4 AND RETAINING WALL NO. 1

PLAN AND ELEVATION

FARRINGTON HIGHWAY RESURFACING

Vicinity of Kili Drive to Satellite Tracking Station Road

Federal Aid Project No. STP-093-1(026)

Scale: As Noted — Date: Apr. 2016

SHEET No. 09 OF 34 SHEETS

FED. ROAD DIST. NO.	STATE	FED. AID PROJ. NO.	FISCAL YEAR	SHEET NO.	TOTAL SHEETS
HAWAII	HAW.	STP-093-1(026)	2016	58	110

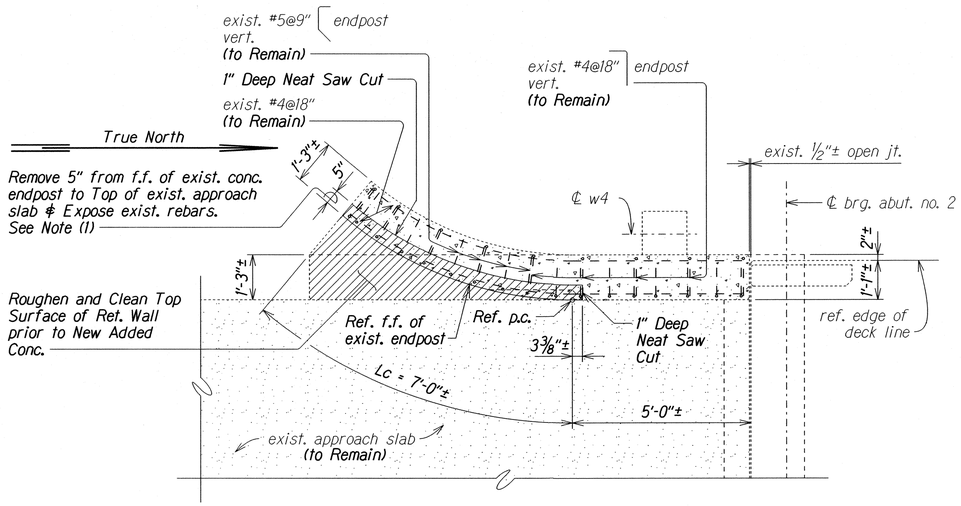

SECTION A (Q9 | Q10)
Scale: ½"=1'-0"

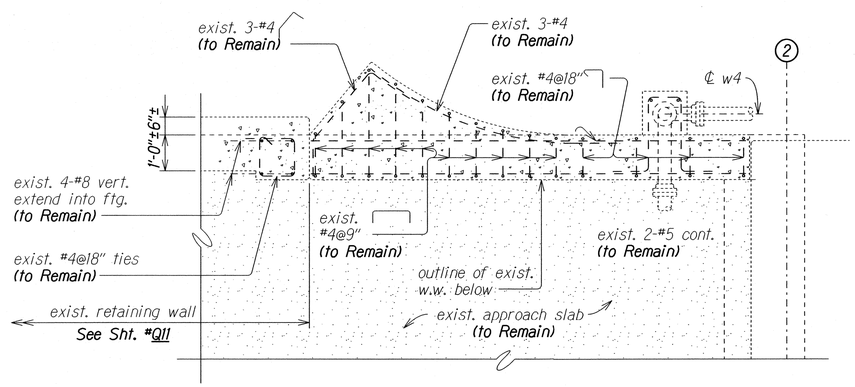

SECTION B (Q9 | Q10)
Scale: ½"=1'-0"

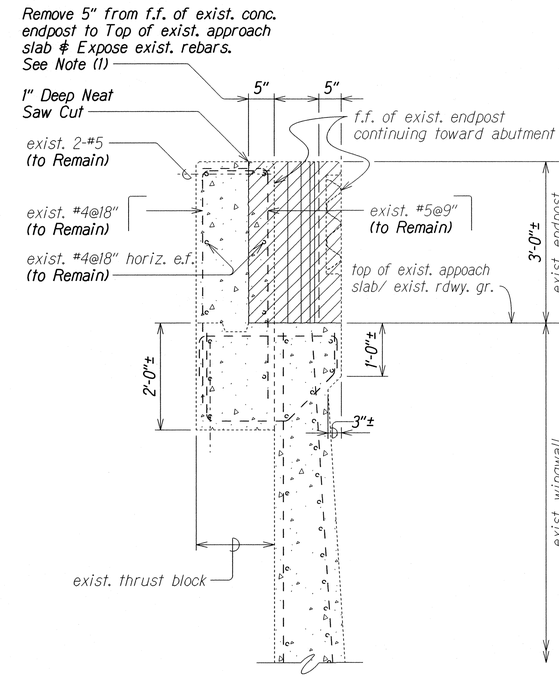

SECTION C (Q9 | Q10)
Scale: ¾"=1'-0"

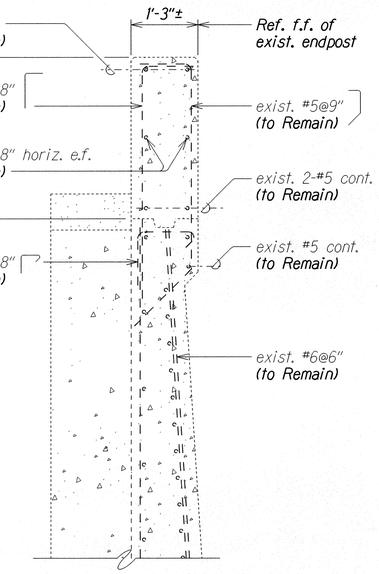

SECTION D (Q9 | Q10)
Scale: ¾"=1'-0"

NOTES:

1) Unless otherwise approved by Engineer, existing concrete to be removed shall be with chipping or pneumatic tools weighing 15 lbs. or less. Existing reinforcement to remain and undamaged.

2) Prior to Adding New Concrete, all existing surfaces that have been removed and exposed shall be roughened and cleaned.

3) Pay items for Makaha Br. No. 4:
All demolition other than guardrail shall be incidental to pay item Section 606.6000.

LEGEND

Hatched Area Indicates Limits of Removal

DEMOLITION AT EXISTING ENDPOST NO. 4

ORIGINAL PLAN	SURVEY PLOTTED BY XXX	DATE XXX XXX
	DRAWN BY XXX	
	TRACED BY XXX	
NOTE BOOK	DESIGNED BY XXX	XXX XXX
	QUANTITIES BY XXX	XXX XXX
No. Q10.dgn	CHECKED BY XXX	XXX XXX

STATE OF HAWAII
DEPARTMENT OF TRANSPORTATION
HIGHWAYS DIVISION

MAKAHA BRIDGE NO. 4
DEMOLITION AT EXISTING ENDPOST NO. 4
SECTIONS
FARRINGTON HIGHWAY RESURFACING
Vicinity of Kili Drive to Satellite Tracking Station Road
Federal Aid Project No. STP-093-1(026)

Scale: As Noted Date: Apr. 2016

SHEET No. Q10 OF 34 SHEETS

FED. ROAD DIST. NO.	STATE	FED. AID PROJ. NO.	FISCAL YEAR	SHEET NO.	TOTAL SHEETS
HAWAII	HAW.	STP-093-1(026)	2016	59	110

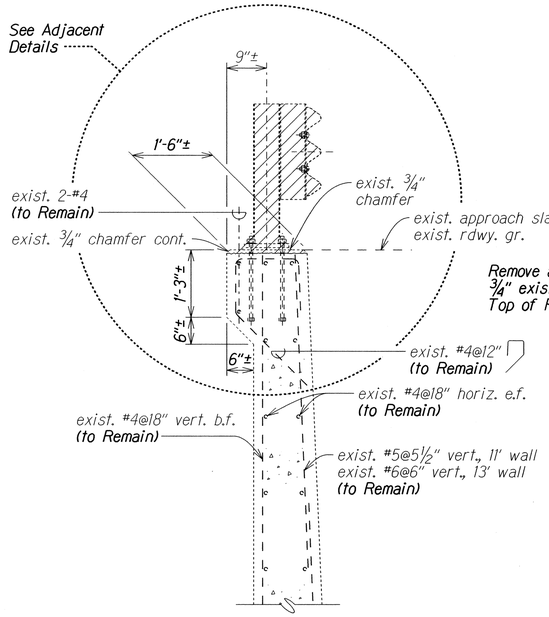

EXISTING TYPICAL RETAINING WALL SECTION

Scale: ¾"=1'-0"

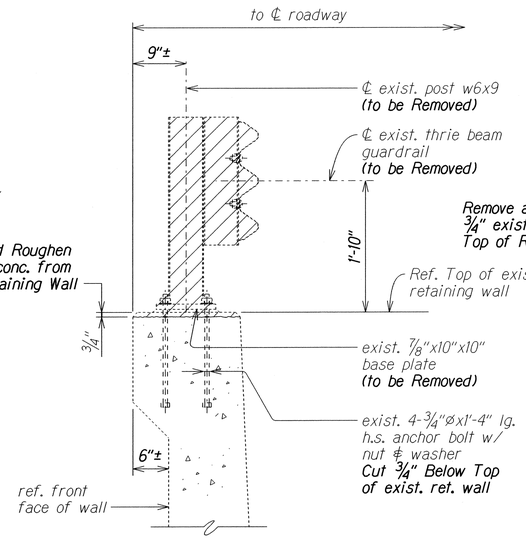

AT EXISTING THRIE BEAM

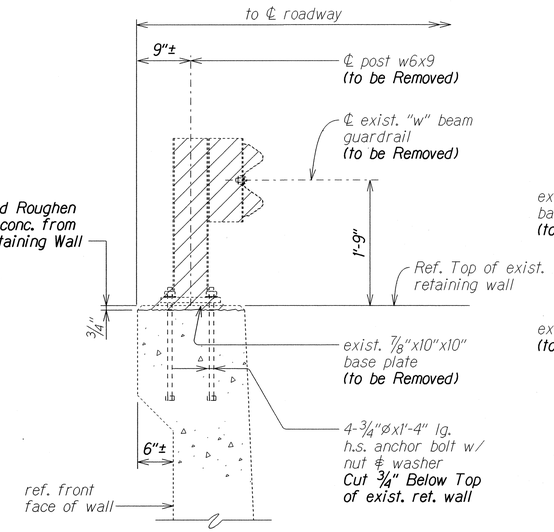

AT EXISTING "W" BEAM

EXISTING GUARDRAIL ON RETAINING WALL DETAILS

Scale: 1"=1'-0"

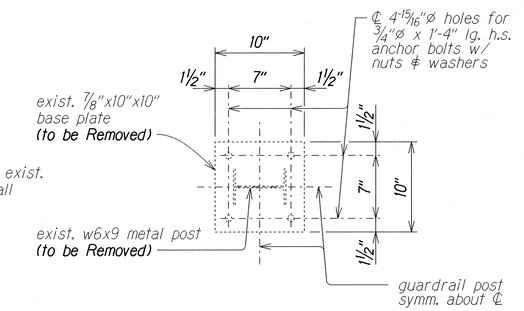

BASE PLATE DETAIL

Scale: 1½"=1'-0"

NOTE:

1. Unless otherwise approved by Engineer, existing concrete to be removed shall be with chipping or pneumatic tools weighing 15 lbs. or less. Existing reinforcement to remain undamaged.
2. Pay items for Makaha Br. No. 4:
   a) All guardrail demolition shall be incidental to pay item Section 606.7000.
   b) All demolition other than guardrail shall be incidental to pay item Section 606.6000.

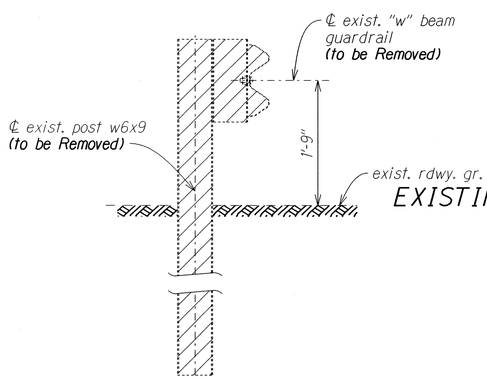

EXISTING GUARDRAIL ON RETAINING WALL DETAILS

EXISTING GUARDRAIL BEYOND RETAINING WALL

Scale: 1"=1'-0"

LEGEND

Hatched Area Indicates Limits of Removal

ORIGINAL PLAN	SURVEY PLOTTED BY XXX	DATE XXX XXX
	DRAWN BY XXX	
	TRACED BY XXX	XXX XXX
NOTE BOOK	DESIGNED BY XXX	XXX XXX
	QUANTITIES BY XXX	XXX XXX
No. Q11.dgn	CHECKED BY XXX	XXX XXX

DEMOLITION AT EXISTING RETAINING WALL NO. 1

STATE OF HAWAII
DEPARTMENT OF TRANSPORTATION
HIGHWAYS DIVISION

MAKAHA BRIDGE NO. 4

DEMOLITION AT EXISTING RETAINING WALL NO. 1
SECTION AND DETAILS

FARRINGTON HIGHWAY RESURFACING
Vicinity of Kili Drive to Satellite Tracking Station Road
Federal Aid Project No. STP-093-1(026)

Scale: As Noted — Date: Apr. 2016

SHEET No. Q11 OF 34 SHEETS

FED. ROAD DIST. NO.	STATE	FED. AID PROJ. NO.	FISCAL YEAR	SHEET NO.	TOTAL SHEETS
HAWAII	HAW.	STP-093-1(026)	2016	60	110

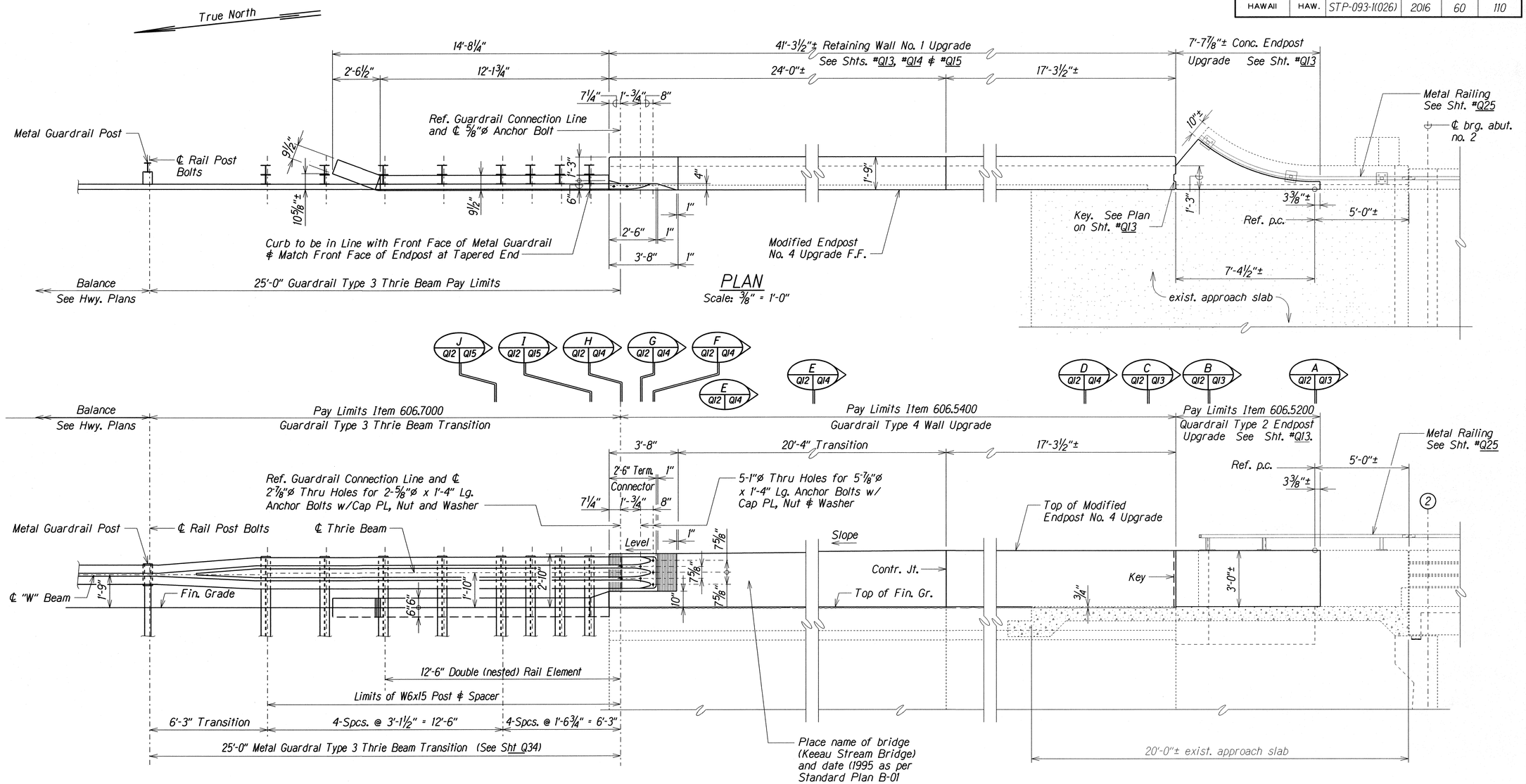

ELEVATION
Scale: ⅜" = 1'-0"

NOTES:

1) See Sht. #Q34 for Metal Guardrail Type 3 Thrie Beam and Appurtenances Details.

2) Adjust Rebar Location to Clear Holes for Metal Guardrail Connection Anchor Bolts.

3) See Sht. #Q22 for Reinforcement in Plan & Elevation. See See Sht. #Q23 and #Q24 for Details.

MODIFIED ENDPOST NO. 4 UPGRADE CONNECTION

(AT RETAINING WALL NO. 1)

SURVEY PLOTTED BY	XXX	DATE XXX XXX
DRAWN BY	XXX	
TRACED BY	XXX	XXX XXX
DESIGNED BY	XXX	XXX XXX
QUANTITIES BY	XXX	XXX XXX
CHECKED BY	XXX	XXX XXX

ORIGINAL PLAN — NOTE BOOK — No. Q12.dgn

STATE OF HAWAII
DEPARTMENT OF TRANSPORTATION
HIGHWAYS DIVISION

MAKAHA BRIDGE NO. 4

MODIFIED ENDPOST NO. 4 UPGRADE CONNECTION
PLAN AND ELEVATION
FARRINGTON HIGHWAY RESURFACING
Vicinity of Kili Drive to Satellite Tracking Station Road
Federal Aid Project No. STP-093-1(026)

Scale: As Noted — Date: Apr. 2016

SHEET No. Q12 OF 34 SHEETS

FED. ROAD DIST. NO.	STATE	FED. AID PROJ. NO.	FISCAL YEAR	SHEET NO.	TOTAL SHEETS
HAWAII	HAW.	STP-093-1(026)	2016	61	110

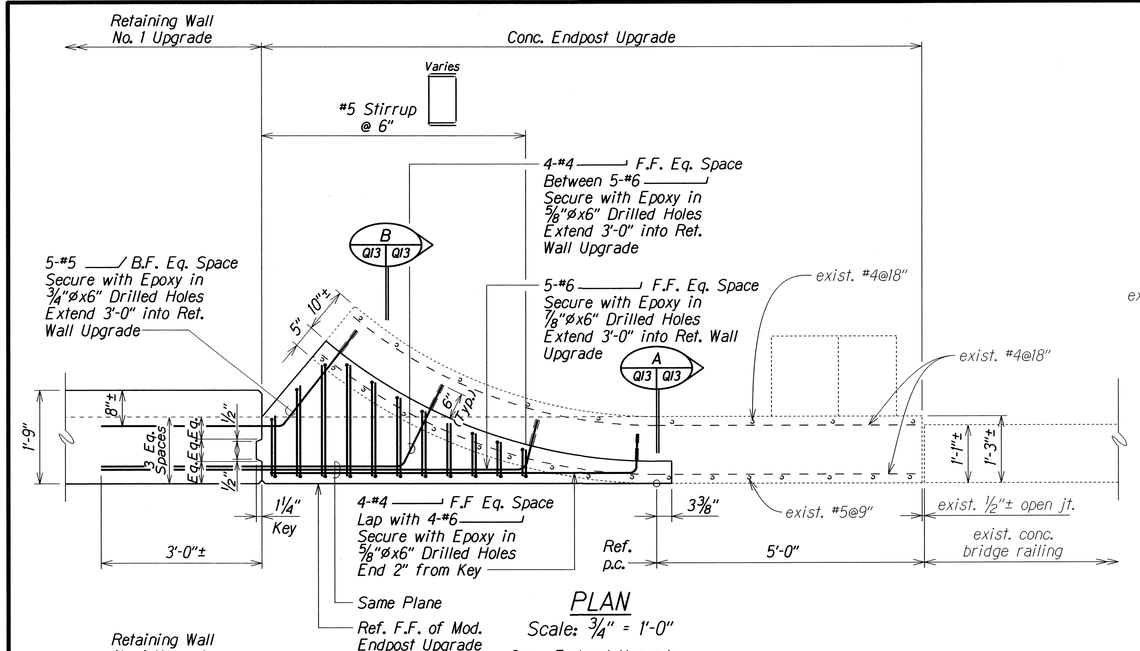

PLAN
Scale: 3/4" = 1'-0"

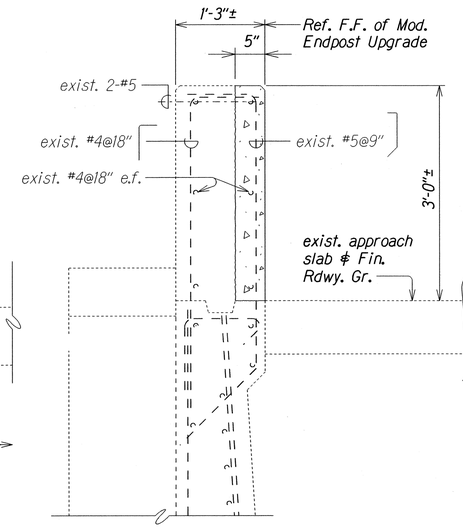

SECTION A Q12 Q13 Q13
Scale: 1" = 1'-0"

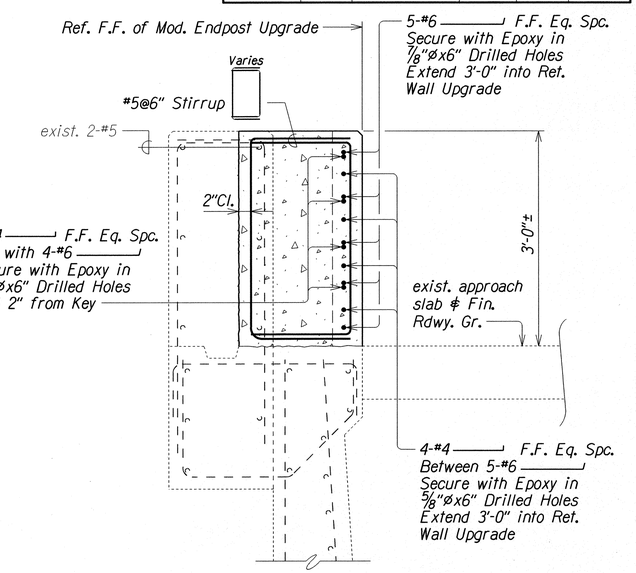

SECTION B Q12 Q13 Q13
Scale: 1" = 1'-0"

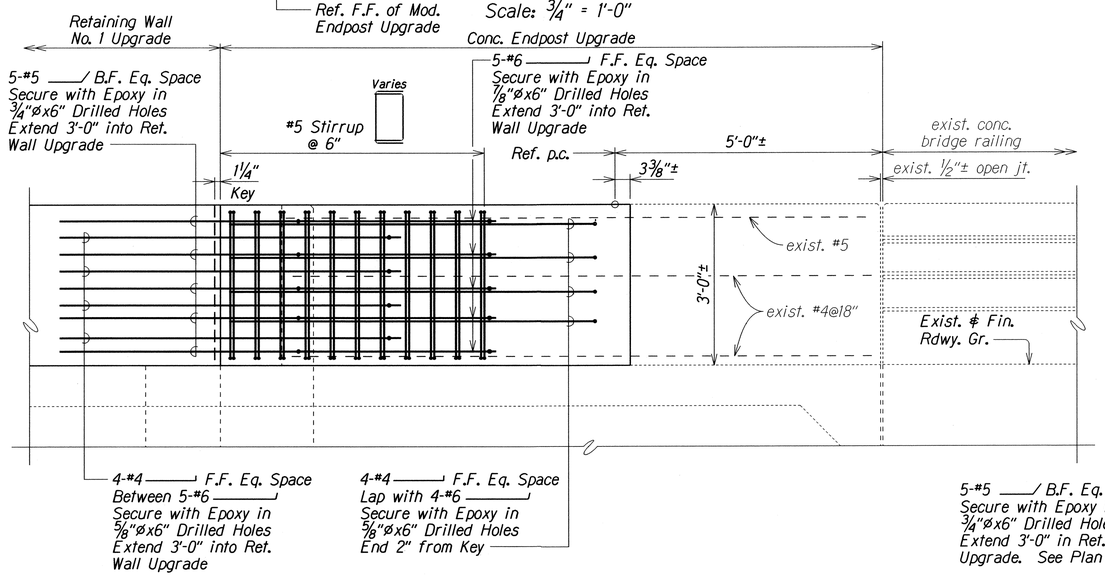

ELEVATION
Scale: 3/4" = 1'-0"

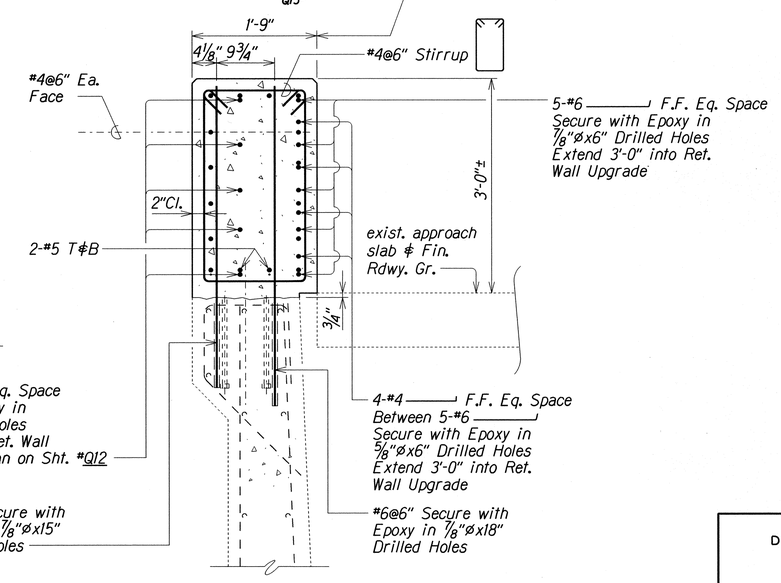

SECTION C Q12 Q13
Scale: 1" = 1'-0"

NOTE:
Existing vertical rebars not show in Elevation for Clarity. See Sht. #Q10.

MODIFIED ENDPOST NO. 4 UPGRADE CONNECTION

(AT RETAINING WALL NO. 1)

			DATE
ORIGINAL PLAN	SURVEY PLOTTED BY	XXX	XXX XXX
	DRAWN BY		
	TRACED BY	XXX	XXX XXX
NOTE BOOK	DESIGNED BY	XXX	XXX XXX
	QUANTITIES BY	XXX	XXX XXX
N. Q13.dgn	CHECKED BY	XXX	XXX XXX

STATE OF HAWAII
DEPARTMENT OF TRANSPORTATION
HIGHWAYS DIVISION

MAKAHA BRIDGE NO. 4

MODIFIED ENDPOST NO. 4 UPGRADE CONNECTION
REINFORCEMENT PLAN, ELEVATION AND SECTIONS

FARRINGTON HIGHWAY RESURFACING
Vicinity of Kili Drive to Satellite Tracking Station Road
Federal Aid Project No. STP-093-1(026)

Scale: As Noted — Date: Apr. 2016

SHEET No. Q13 OF 34 SHEETS

FED. ROAD DIST. NO.	STATE	FED. AID PROJ. NO.	FISCAL YEAR	SHEET NO.	TOTAL SHEETS
HAWAII	HAW.	STP-093-1(026)	2016	62	110

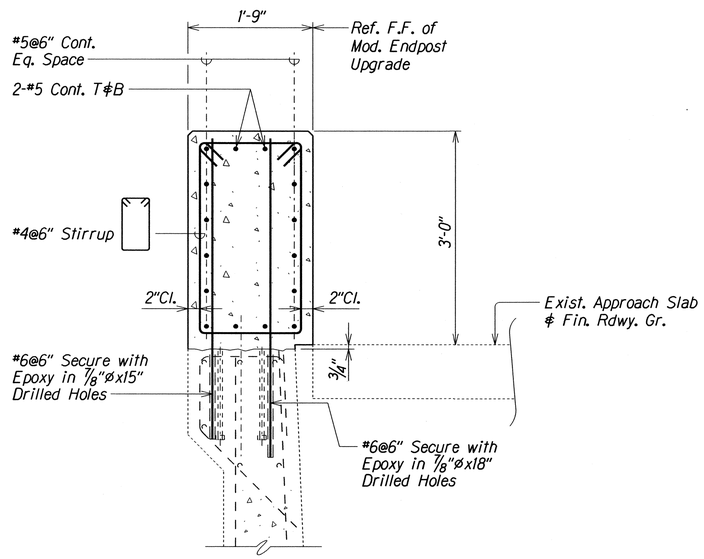

SECTION D (Q12 | Q14)
Scale: 1" = 1'-0"

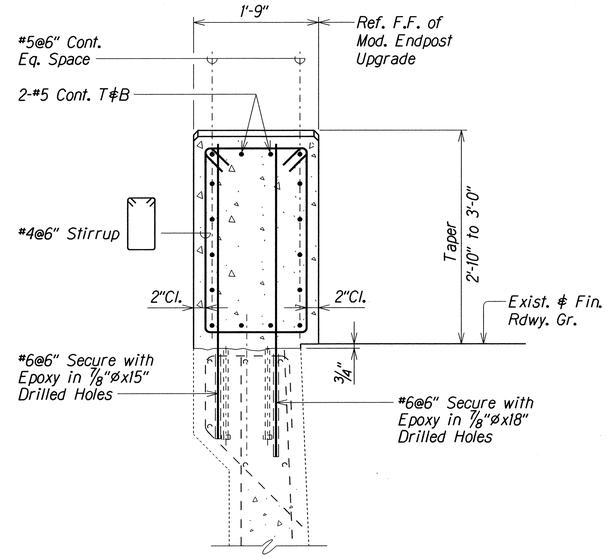

SECTION E (Q12 | Q14)
Scale: 1" = 1'-0"

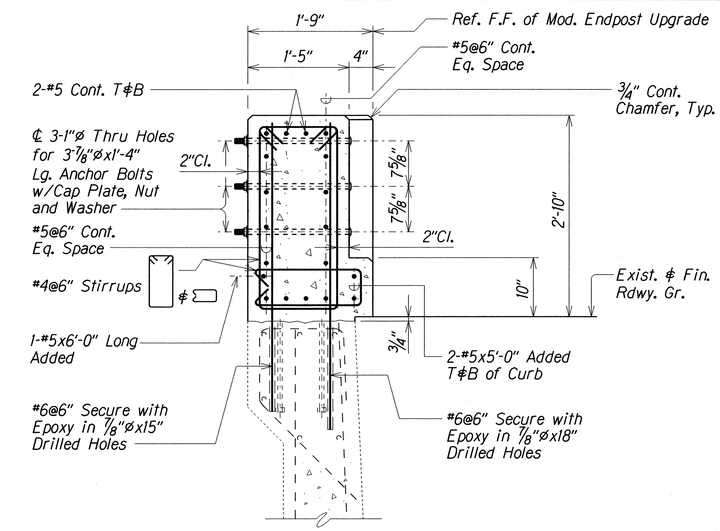

SECTION F (Q12 | Q14)
Scale: 1" = 1'-0"

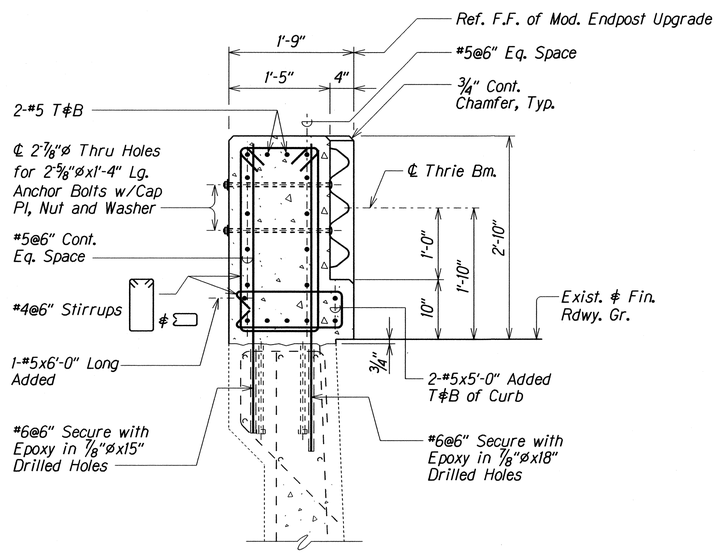

SECTION G (Q12 | Q14)
Scale: 1" = 1'-0"

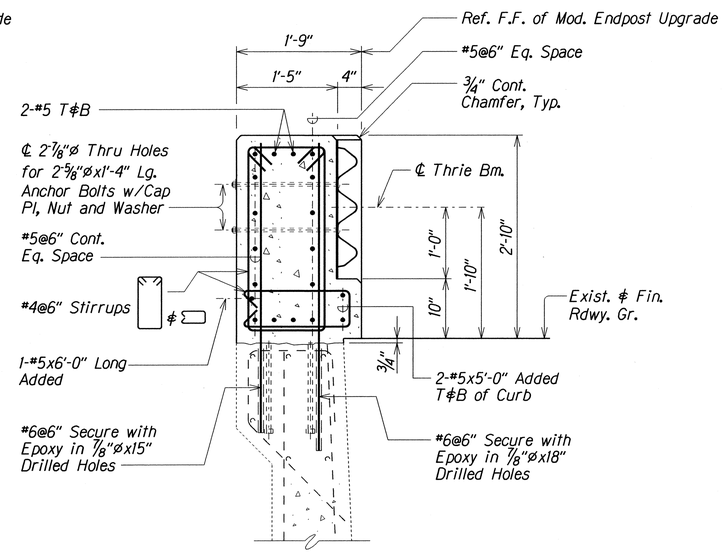

SECTION H (Q12 | Q14)
Scale: 1" = 1'-0"

MODIFIED ENDPOST NO. 4 UPGRADE CONNECTION
(AT RETAINING WALL NO. 1)

ORIGINAL PLAN	SURVEY PLOTTED BY XXX	DATE XXX XXX
	DRAWN BY	
	TRACED BY	
NOTE BOOK	DESIGNED BY XXX	XXX XXX
	QUANTITIES BY XXX	XXX XXX
No. Q14.dgn	CHECKED BY XXX	XXX XXX

STATE OF HAWAII
DEPARTMENT OF TRANSPORTATION
HIGHWAYS DIVISION

MAKAHA BRIDGE NO. 4
MODIFIED ENDPOST NO. 4 UPGRADE CONNECTION
SECTIONS
FARRINGTON HIGHWAY RESURFACING
Vicinity of Kili Drive to Satellite Tracking Station Road
Federal Aid Project No. STP-093-1(026)

Scale: As Noted — Date: Apr. 2016

FED. ROAD DIST. NO.	STATE	FED. AID PROJ. NO.	FISCAL YEAR	SHEET NO.	TOTAL SHEETS
HAWAII	HAW.	STP-093-1(026)	2016	63	110

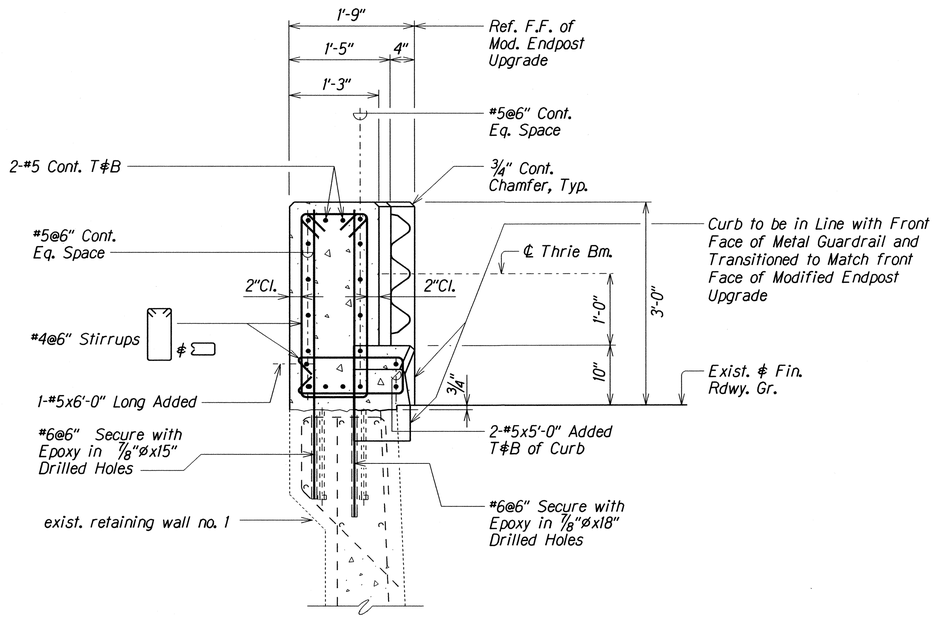

SECTION I
Scale: 1" = 1'-0"
Q12 | Q15

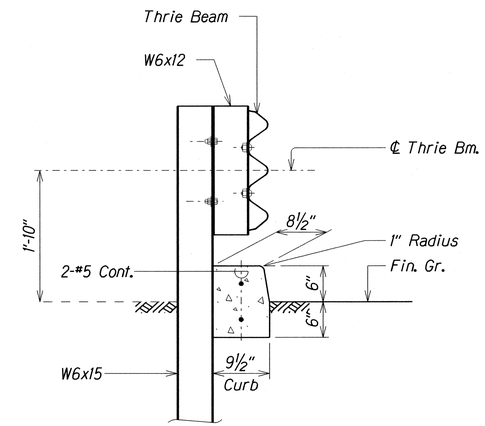

SECTION J
Scale: 1" = 1'-0"
Q12 | Q15

MODIFIED ENDPOST NO. 4 UPGRADE CONNECTION

ORIGINAL PLAN	SURVEY PLOTTED BY XXX	DATE
	DRAWN BY XXX	XXX XXX
NOTE BOOK	TRACED BY XXX	XXX XXX
	DESIGNED BY XXX	XXX XXX
No. Q15.dgn	QUANTITIES BY XXX	XXX XXX
	CHECKED BY XXX	XXX XXX

STATE OF HAWAII
DEPARTMENT OF TRANSPORTATION
HIGHWAYS DIVISION

MAKAHA BRIDGE NO. 4

MODIFIED ENDPOST NO. 4 UPGRADE CONNECTION
SECTIONS

FARRINGTON HIGHWAY RESURFACING
Vicinity of Kili Drive to Satellite Tracking Station Road
Federal Aid Project No. STP-093-1(026)

Scale: As Noted — Date: Apr. 2016

SHEET No. Q15 OF 34 SHEETS

FED. ROAD DIST. NO.	STATE	FED. AID PROJ. NO.	FISCAL YEAR	SHEET NO.	TOTAL SHEETS
HAWAII	HAW.	STP-093-1(026)	2016	64	110

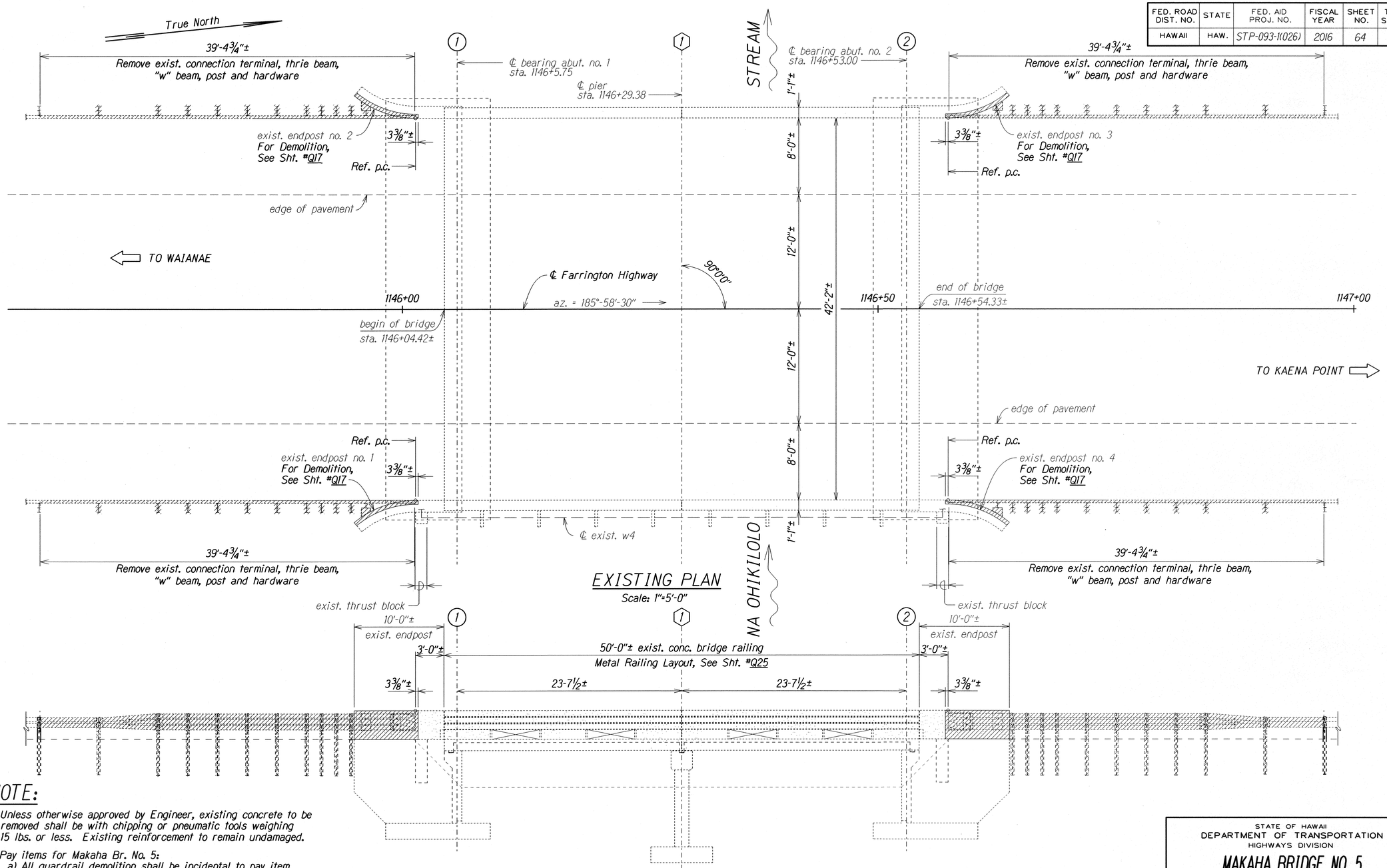

EXISTING PLAN
Scale: 1"=5'-0"

EXISTING ELEVATION
Scale: 1"=5'-0"

NOTE:

1. Unless otherwise approved by Engineer, existing concrete to be removed shall be with chipping or pneumatic tools weighing 15 lbs. or less. Existing reinforcement to remain undamaged.
2. Pay items for Makaha Br. No. 5:
   a) All guardrail demolition shall be incidental to pay item Section 606.7000.
   b) All demolition other than guardrail shall be incidental to pay item Section 606.5300.

LEGEND

Hatched Area Indicates Limits of Removal

MAKAHA BRIDGE NO. 5

ORIGINAL PLAN	SURVEY PLOTTED BY XXX	DATE XXX XXX
	DRAWN BY	
	TRACED BY XXX	XXX XXX
NOTE BOOK	DESIGNED BY XXX	XXX XXX
	QUANTITIES BY XXX	XXX XXX
No. Q16.dgn	CHECKED BY XXX	XXX XXX

STATE OF HAWAII
DEPARTMENT OF TRANSPORTATION
HIGHWAYS DIVISION

MAKAHA BRIDGE NO. 5
EXISTING PLAN AND ELEVATION
FARRINGTON HIGHWAY RESURFACING
Vicinity of Kili Drive to Satellite Tracking Station Road
Federal Aid Project No. STP-093-1(026)

Scale: As Noted Date: Apr, 2016

FED. ROAD DIST. NO.	STATE	FED. AID PROJ. NO.	FISCAL YEAR	SHEET NO.	TOTAL SHEETS
HAWAII	HAW.	STP-093-1(026)	2016	65	110

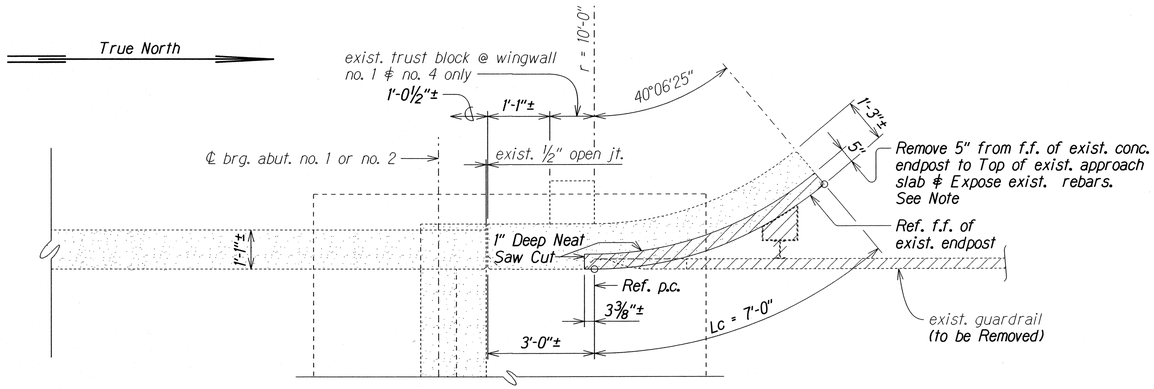

PLAN

Scale: ½"=1'-0"

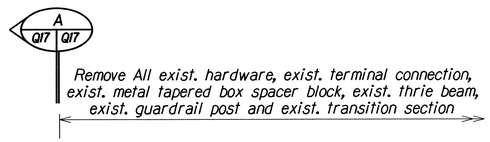

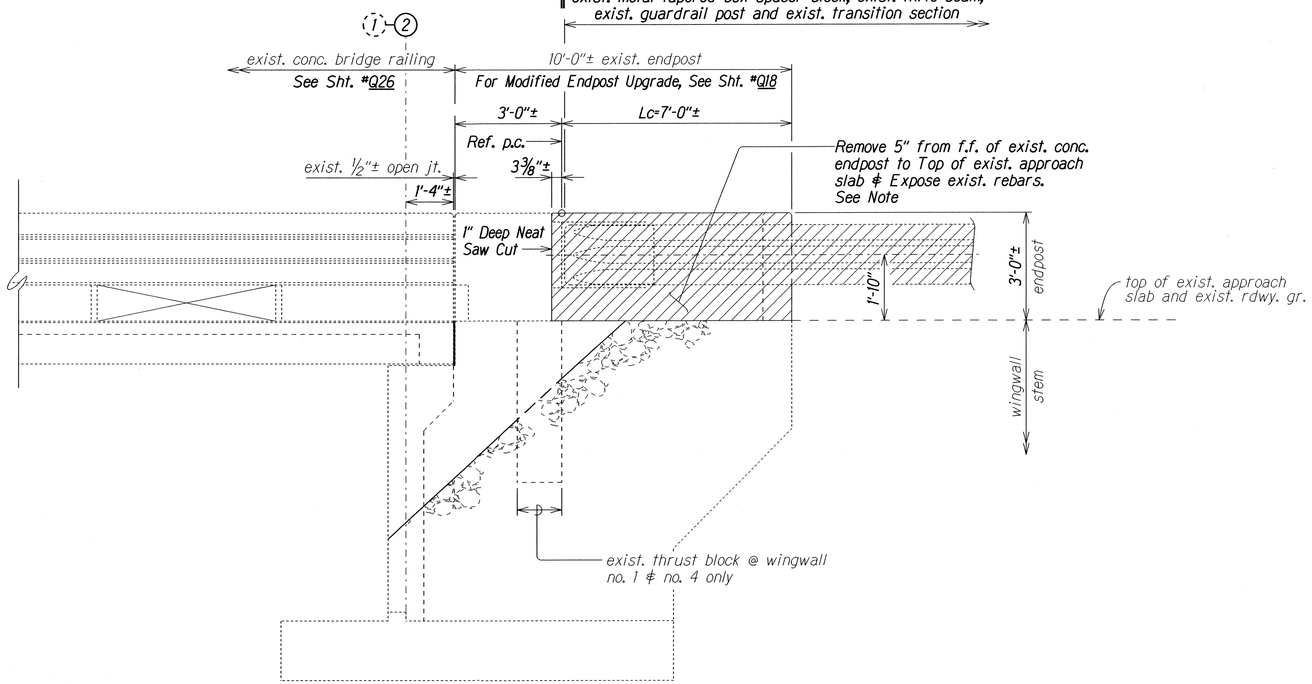

ELEVATION

Scale: ½"=1'-0"

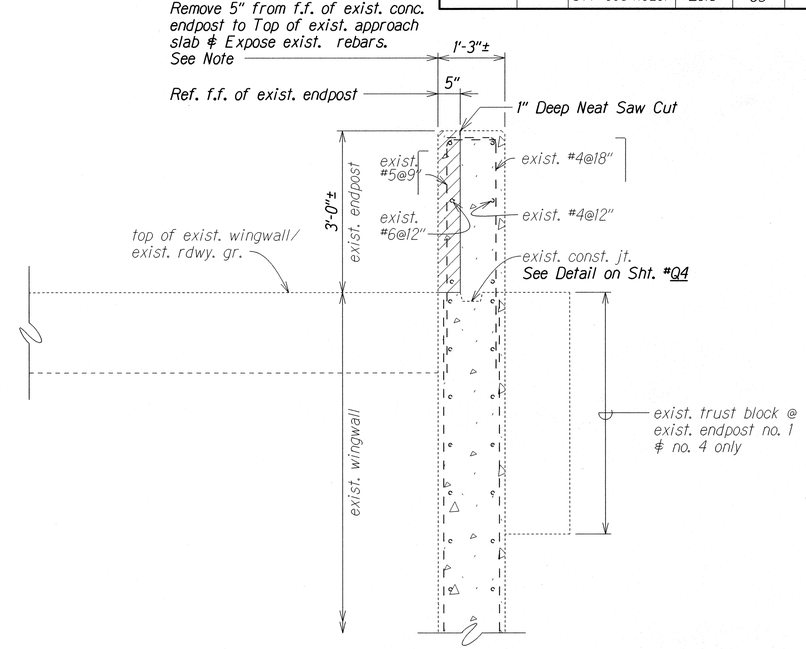

SECTION

Scale: ¾"=1'-0"

A
Q17 Q17

NOTE:

1. Unless otherwise approved by Engineer, existing concrete to be removed shall be with chipping or pneumatic tools weighing 15 lbs. or less. Existing reinforcement to remain undamaged.
2. Pay items for Makaha Br. No. 5:
   a) All guardrail demolition shall be incidental to pay item Section 606.7000.
   b) All demolition other than guardrail shall be incidental to pay item Section 606.5300.

ORIGINAL PLAN			
	SURVEY PLOTTED BY		DATE
	DRAWN BY	XXX	XXX XXX
	TRACED BY		
NOTE BOOK	TRACED BY	XXX	XXX XXX
	DESIGNED BY	XXX	XXX XXX
No. Q17.dgn	QUANTITIES BY	XXX	XXX XXX
	CHECKED BY	XXX	

DEMOLITION AT EXISTING ENDPOST NO. 3

ENDPOST NO. 1 SIMILAR

ENDPOST NOS. 2 & 4 SIMILAR EXCEPT OPPOSITE HAND

LEGEND

Hatched Area Indicates Limits of Removal

STATE OF HAWAII
DEPARTMENT OF TRANSPORTATION
HIGHWAYS DIVISION

MAKAHA BRIDGE NO. 5

DEMOLITION AT EXISTING ENDOPOST NOS. 1, 2, 3 & 4
PLAN, ELEVATION AND SECTION
FARRINGTON HIGHWAY RESURFACING
Vicinity of Kili Drive to Satellite Tracking Station Road
Federal Aid Project No. STP-093-1(026)

Scale: As Noted — Date: Apr. 2016

SHEET No. Q17 OF 34 SHEETS

FED. ROAD DIST. NO.	STATE	FED. AID PROJ. NO.	FISCAL YEAR	SHEET NO.	TOTAL SHEETS
HAWAII	HAW.	STP-093-1(026)	2016	66	110

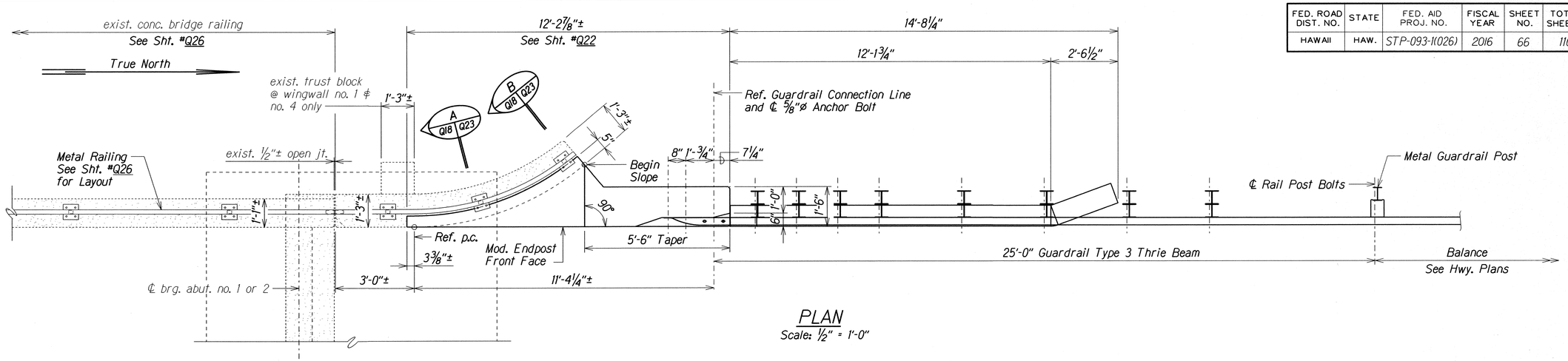

PLAN

Scale: 1/2" = 1'-0"

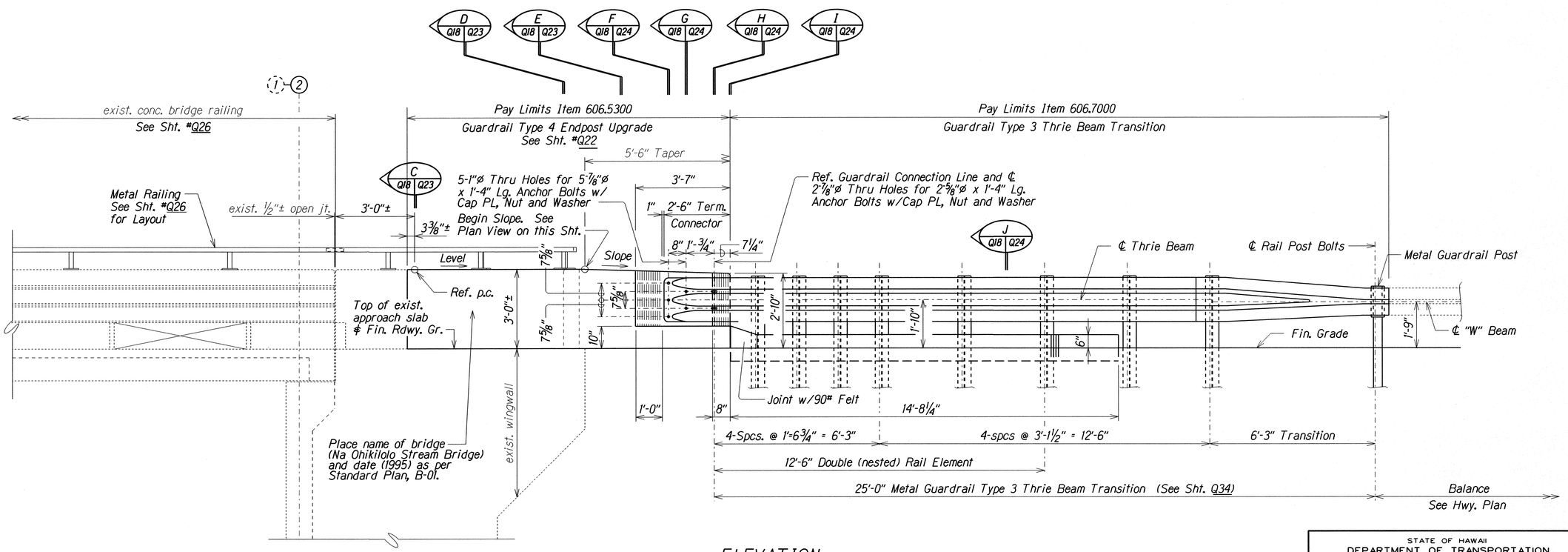

ELEVATION

Scale: 1/2"=1'-0"

NOTES:

1) See Sht. #Q34 for Metal Guardrail Type 3 Thrie Beam and Appurtenances Details.

2) Adjust Rebar Location to Clear Holes for Metal Guardrail Connection Anchor Bolts.

3) See Sht. #Q22 for Reinforcement in Plan & Elevation. See See Shts. #Q23 and #Q24 for Details.

MODIFIED ENDPOST NO. 3 UPGRADE CONNECTION

ENDPOST NO. 1 SIMILAR

ENDPOST NOS. 2 & 4 SIMILAR EXCEPT OPPOSITE HAND

ORIGINAL PLAN	SURVEY PLOTTED BY XXX	DATE XXX XXX
	DRAWN BY	
	TRACED BY XXX	XXX XXX
NOTE BOOK	DESIGNED BY XXX	XXX XXX
	QUANTITIES BY XXX	XXX XXX
No. Q18.dgn	CHECKED BY XXX	XXX XXX

STATE OF HAWAII
DEPARTMENT OF TRANSPORTATION
HIGHWAYS DIVISION

MAKAHA BRIDGE NO. 5

MODIFIED ENDPOST NOS. 1, 2, 3 and 4 UPGRADE CONNECTIONS

PLAN AND ELEVATION

FARRINGTON HIGHWAY RESURFACING

Vicinity of Kili Drive to Satellite Tracking Station Road

Federal Aid Project No. STP-093-1(026)

Scale: As Noted Date: Apr. 2016

SHEET No. Q18 OF 34 SHEETS

FED. ROAD DIST. NO.	STATE	FED. AID PROJ. NO.	FISCAL YEAR	SHEET NO.	TOTAL SHEETS
HAWAII	HAW.	STP-093-1(026)	2016	67	110

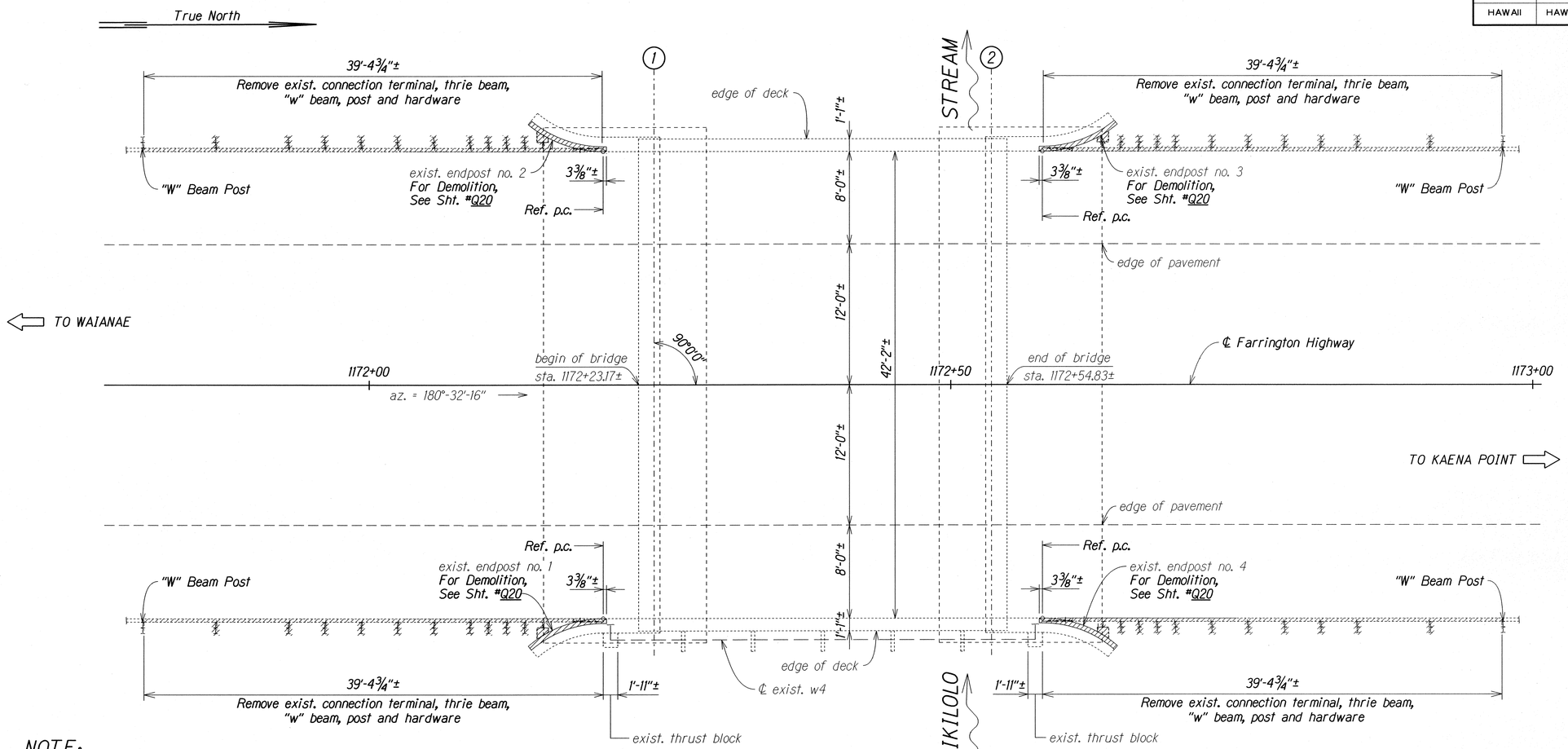

EXISTING PLAN

Scale: 1"=5'-0"

NOTE:

1. Pay Items for Makaha Bridge No. 5A:
   a) All guardrail demolition shall be incidental to pay item Section 606.7000.
   b) All demolition other than guardrail shall be incidental to pay item Section 606.5400.

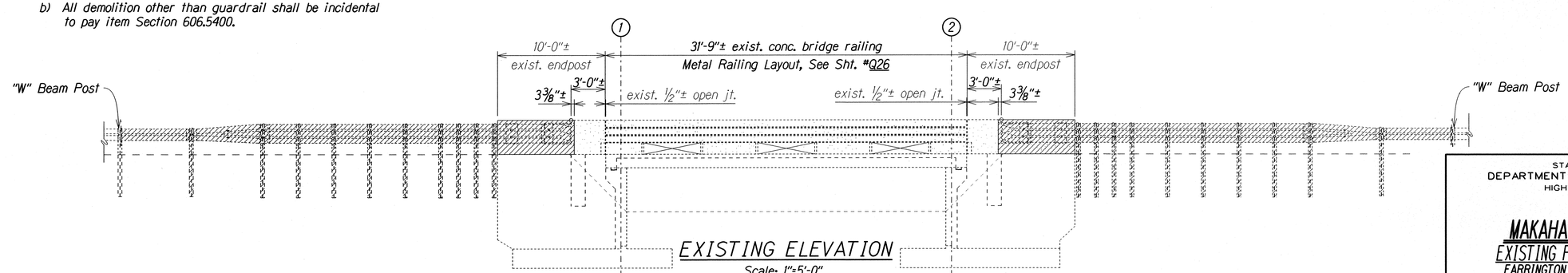

EXISTING ELEVATION

Scale: 1"=5'-0"

LEGEND

Hatched Area Indicates Limits of Removal

MAKAHA BRIDGE NO. 5A

ORIGINAL PLAN	SURVEY PLOTTED BY XXX	DRAWN BY XXX	TRACED BY XXX	DESIGNED BY XXX	QUANTITIES BY XXX	CHECKED BY XXX	DATE XXX XXX
NOTE BOOK	No. 019.dgn						

STATE OF HAWAII
DEPARTMENT OF TRANSPORTATION
HIGHWAYS DIVISION

MAKAHA BRIDGE NO. 5A
EXISTING PLAN AND ELEVATION
FARRINGTON HIGHWAY RESURFACING
Vicinity of Kili Drive to Satellite Tracking Station Road
Federal Aid Project No. STP-093-1(026)

Scale: As Noted Date: Apr, 2016

SHEET No. Q19 OF 34 SHEETS

FED. ROAD DIST. NO.	STATE	FED. AID PROJ. NO.	FISCAL YEAR	SHEET NO.	TOTAL SHEETS
HAWAII	HAW.	STP-093-1(026)	2016	68	110

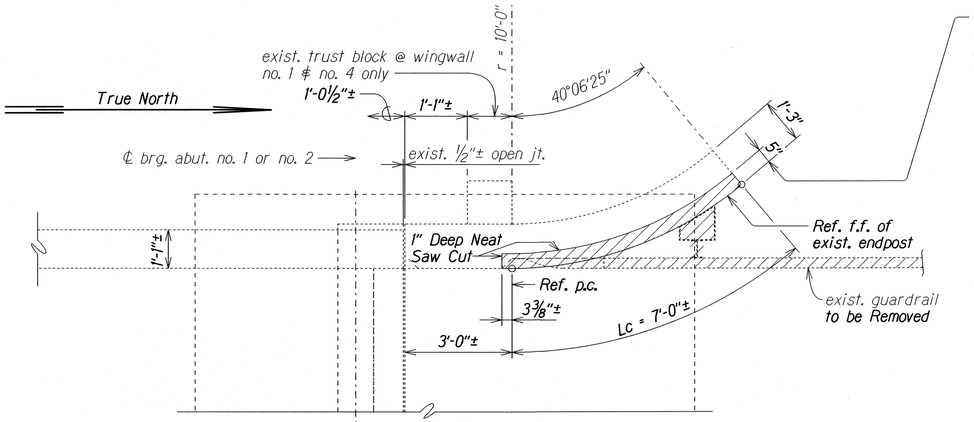

Remove 5" from f.f. of exist. conc. endpost to Top of exist. approach slab & Expose exist. rebars. See Note

PLAN

Scale: ½"=1'-0"

A Q20 Q20 B Q20 Q20

Remove All exist. hardware, exist. terminal connection, exist. metal tapered box spacer block, exist. thrie beam, exist. guardrail post and exist. transition section

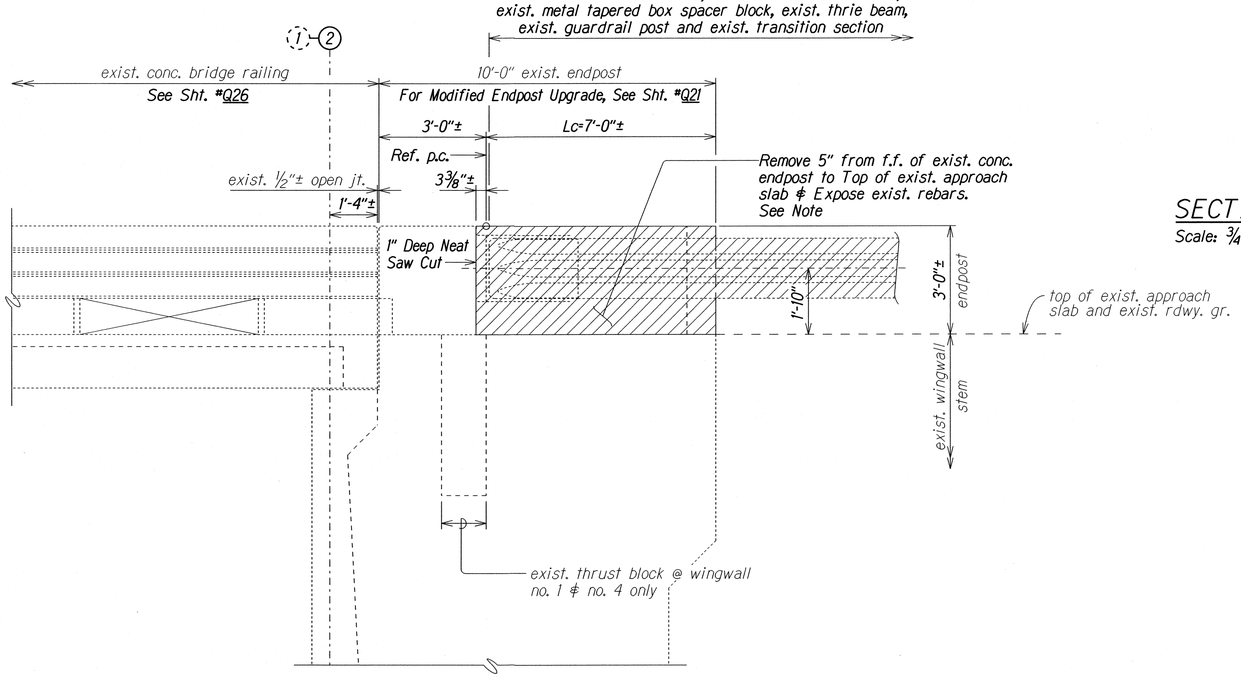

ELEVATION

Scale: ½"=1'-0"

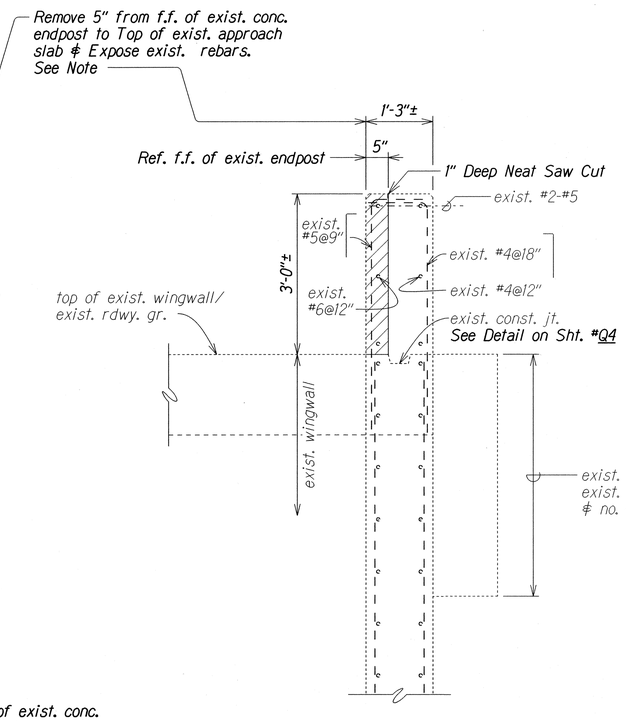

SECTION A

Scale: ¾"=1'-0"

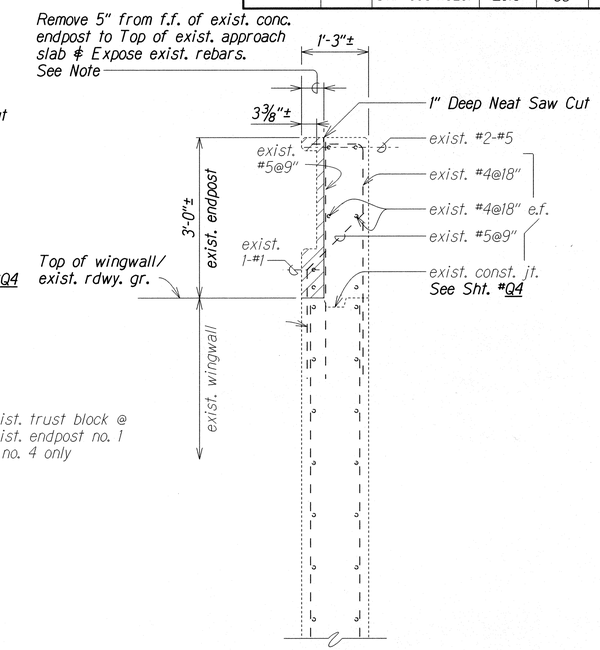

SECTION B

Scale: ¾"=1'-0"

NOTE:

1. Unless otherwise approved by Engineer, existing concrete to be removed shall be with chipping or pneumatic tools weighing 15 lbs. or less. Existing reinforcement to remain undamaged.

2. Pay Items for Makaha Bridge No. 5A:
   a) All guardrail demolition shall be incidental to pay item Section 606.7000.
   b) All demolition other than guardrail shall be incidental to pay item Section 606.5400.

LEGEND

Hatched Area Indicates Limits of Removal

DEMOLITION AT EXISTING ENDPOST NO. 3

ENDPOST NO. 1 SIMILAR

ENDPOST NOS. 2 & 4 SIMILAR EXCEPT OPPOSITE HAND

ORIGINAL PLAN	SURVEY PLOTTED BY XXX	DATE
	DRAWN BY XXX	XXX XXX
	TRACED BY XXX	XXX XXX
NOTE BOOK	DESIGNED BY XXX	XXX XXX
	QUANTITIES BY XXX	XXX XXX
No. Q20.dgn	CHECKED BY XXX	XXX XXX

STATE OF HAWAII
DEPARTMENT OF TRANSPORTATION
HIGHWAYS DIVISION

MAKAHA BRIDGE NO. 5A

DEMOLITION AT EXISTING ENDPOST NOS. 1, 2, 3 & 4

PLAN, ELEVATION AND SECTIONS

FARRINGTON HIGHWAY RESURFACING

Vicinity of Kili Drive to Satellite Tracking Station Road

Federal Aid Project No. STP-093-1(026)

Scale: As Noted Date: Apr. 2016

SHEET No. Q20 OF 34 SHEETS

FED. ROAD DIST. NO.	STATE	FED. AID PROJ. NO.	FISCAL YEAR	SHEET NO.	TOTAL SHEETS
HAWAII	HAW.	STP-093-1(026)	2016	69	110

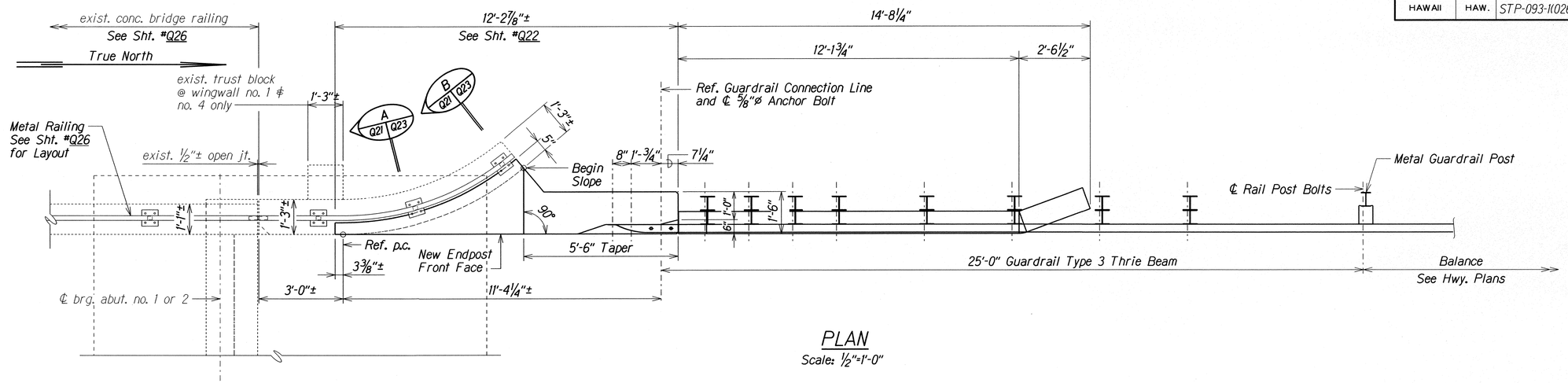

PLAN

Scale: ½"=1'-0"

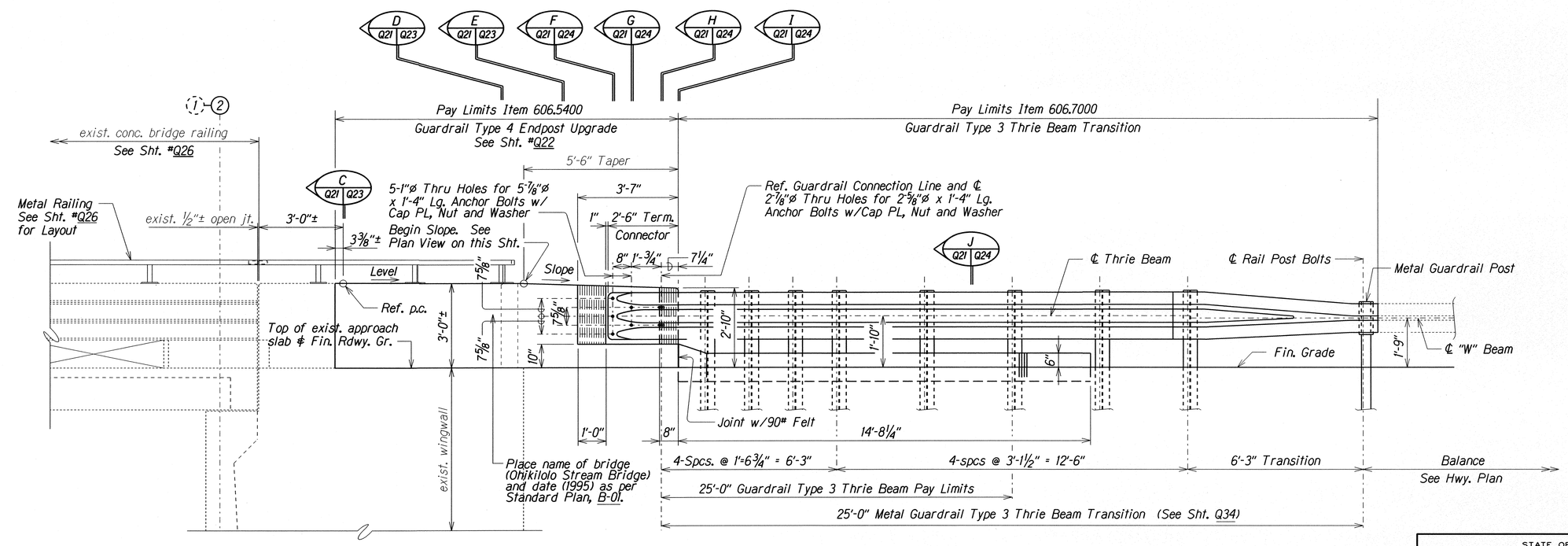

ELEVATION

Scale: ½"=1'-0"

NOTES:

1) See Sht. #Q34 for Metal Guardrail Type 3 Thrie Beam and Appurtenances Details.

2) Adjust Rebar Location to Clear Holes for Metal Guardrail Connection Anchor Bolts.

3) See Sht. #Q22 for Reinforcement in Plan & Elevation. See See Sht. #Q23 and #Q24 for Details.

MODIFIED ENDPOST NO. 3 UPGRADE CONNECTION

ENDPOST NO. 1 SIMILAR

ENDPOST NOS. 2 & 4 SIMILAR EXCEPT OPPOSITE HAND

ORIGINAL PLAN	SURVEY PLOTTED BY XXX	DRAWN BY XXX	TRACED BY XXX	DESIGNED BY XXX	QUANTITIES BY XXX	CHECKED BY XXX	DATE XXX XXX XXX XXX XXX XXX
NOTE BOOK							
No. Q21.dgn							

STATE OF HAWAII
DEPARTMENT OF TRANSPORTATION
HIGHWAYS DIVISION

MAKAHA BRIDGE NO. 5A

MODIFIED ENDPOST NOS. 1, 2, 3 & 4 UPGRADE CONNECTIONS
PLAN AND ELEVATION
FARRINGTON HIGHWAY RESURFACING
Vicinity of Kili Drive to Satellite Tracking Station Road
Federal Aid Project No. STP-093-1(026)

Scale: As Noted Date: Apr. 2015

FED. ROAD DIST. NO.	STATE	FED. AID PROJ. NO.	FISCAL YEAR	SHEET NO.	TOTAL SHEETS
HAWAII	HAW.	STP-093-1(026)	2016	70	110

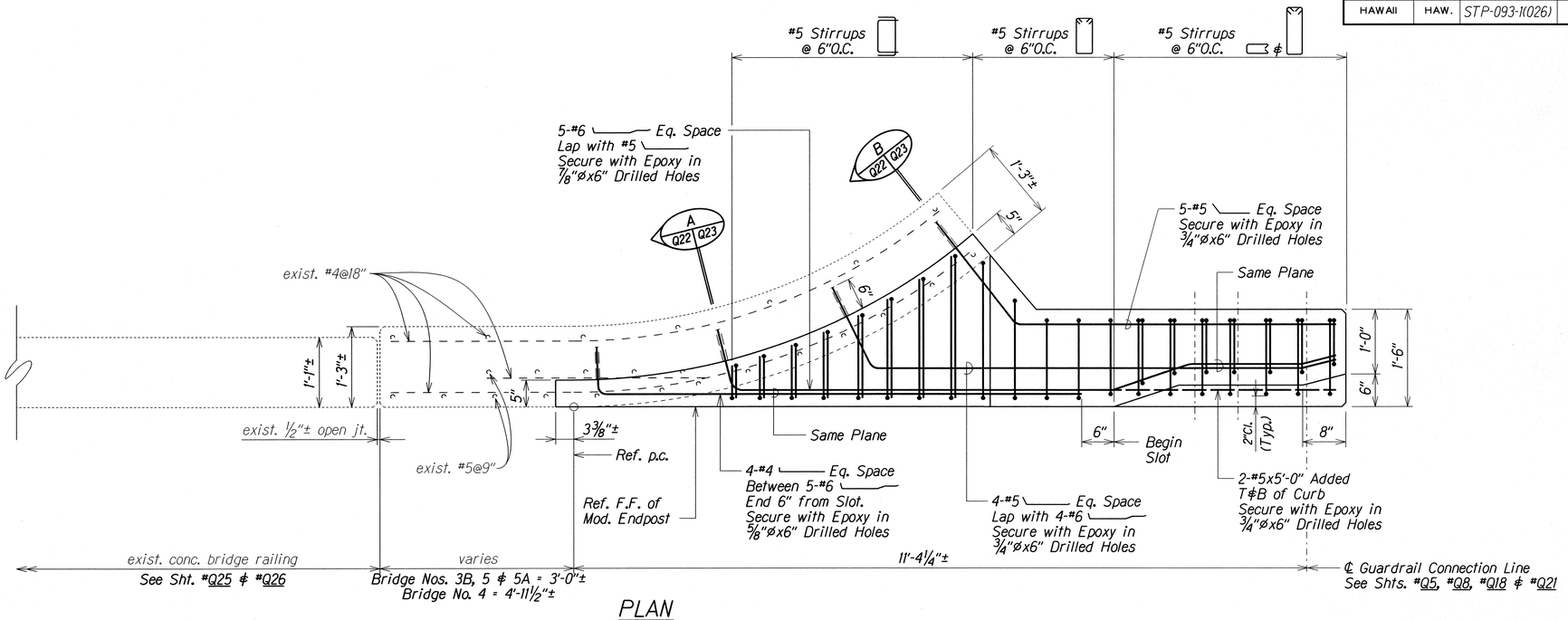

PLAN

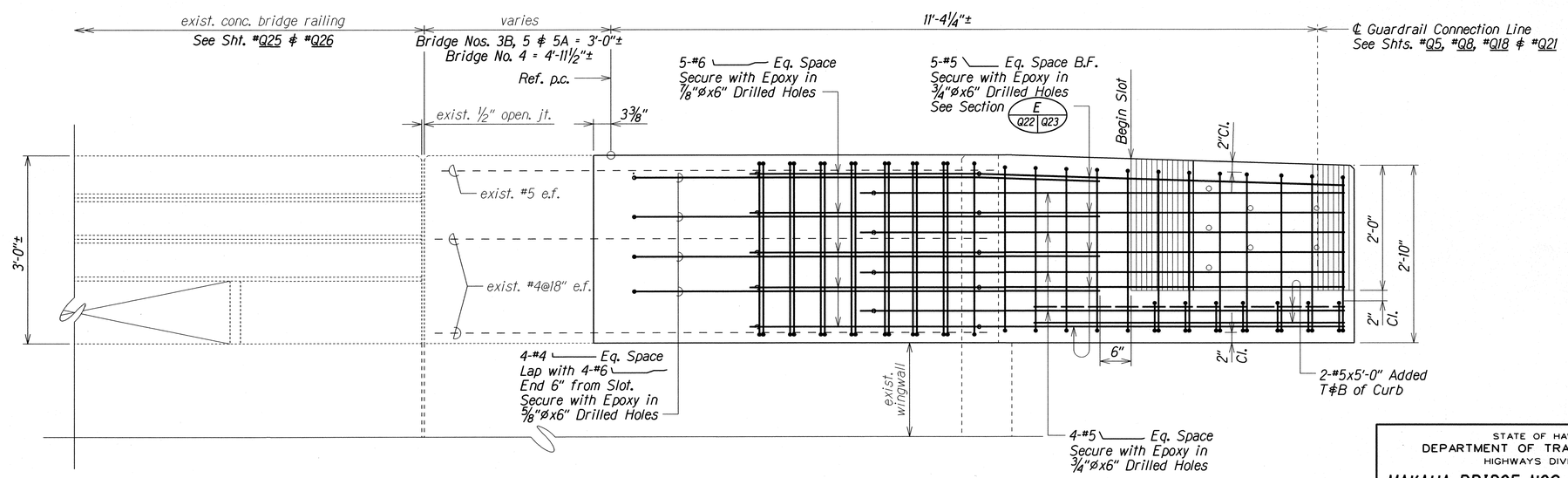

ELEVATION

NOTE:

1) Existing vertical rebars not show in Elevation for Clarity

2) See Sht. #Q34 for Metal Guardrail Type 3 Thrie Beam and Appurtenances Details.

TYPICAL MODIFIED ENDPOST UPGRADE

Scale: 1"=1'-0"

ORIGINAL PLAN	SURVEY PLOTTED BY XXX	DATE
	DRAWN BY	XXX XXX
	TRACED BY	XXX XXX
NOTE BOOK	DESIGNED BY XXX	XXX XXX
	QUANTITIES BY XXX	XXX XXX
No. Q22.dgn	CHECKED BY XXX	XXX XXX

STATE OF HAWAII
DEPARTMENT OF TRANSPORTATION
HIGHWAYS DIVISION

MAKAHA BRIDGE NOS. 3B, 4, 5 AND 5A

TYPICAL MODIFIED ENDPOST UPGRADE
REINFORCEMENT PLAN AND ELEVATION

FARRINGTON HIGHWAY RESURFACING
Vicinity of Kili Drive to Satellite Tracking Station Road
Federal Aid Project No. STP-093-1(026)

Scale: As Noted — Date: Apr, 2016

SHEET No. Q22 OF 34 SHEETS

FED. ROAD DIST. NO.	STATE	FED. AID PROJ. NO.	FISCAL YEAR	SHEET NO.	TOTAL SHEETS
HAWAII	HAW.	STP-093-1(026)	2016	71	110

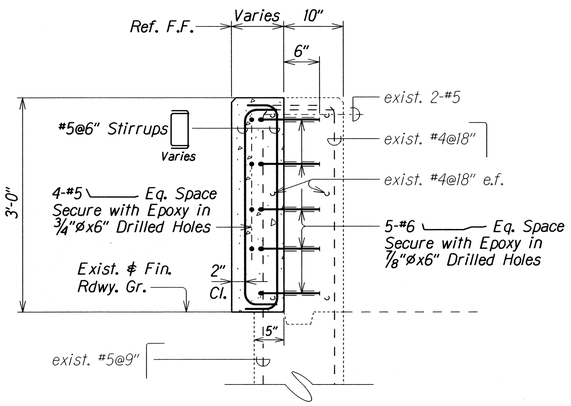

SECTION A
Scale: 1" = 1'-0"
Q5,Q8 | Q23
Q18, Q21 & Q22

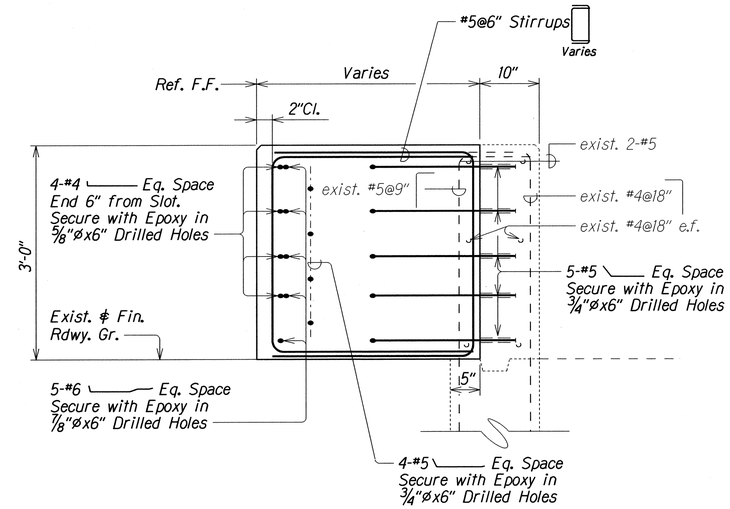

SECTION B
Scale: 1" = 1'-0"
Q5,Q8 | Q23
Q18, Q21 & Q22

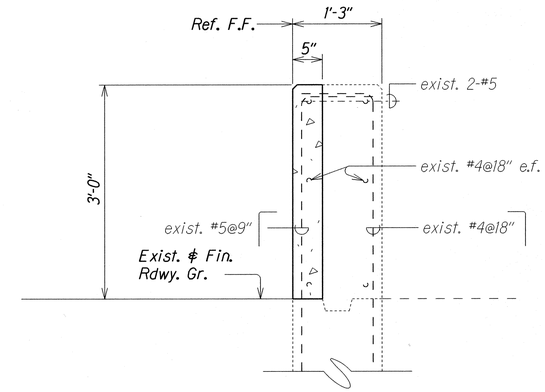

SECTION C
Scale: 1" = 1'-0"
Q5,Q8 | Q23
Q18 & Q21

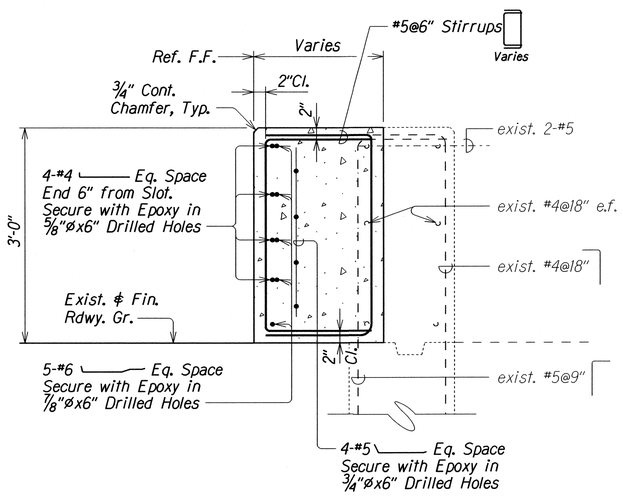

SECTION D
Scale: 1" = 1'-0"
Q5,Q8 | Q23
Q18 & Q21

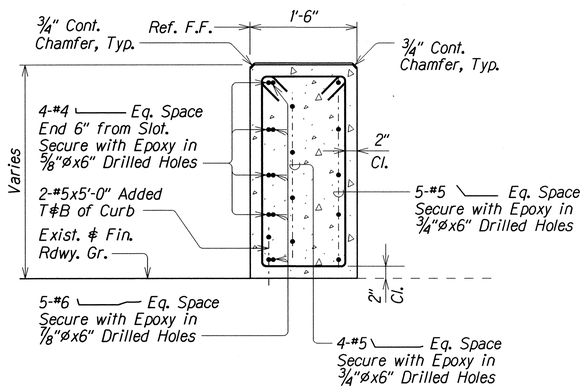

SECTION E
Scale: 1" = 1'-0"
Q5,Q8 | Q23
Q18, Q21 & Q22

TYPICAL MODIFIED ENDPOST UPGRADE

ORIGINAL PLAN	SURVEY PLOTTED BY XXX	DATE XXX XXX
	DRAWN BY	
	TRACED BY XXX	XXX XXX
NOTE BOOK	DESIGNED BY XXX	XXX XXX
	QUANTITIES BY XXX	XXX XXX
No. Q23.dgn	CHECKED BY XXX	XXX XXX

STATE OF HAWAII
DEPARTMENT OF TRANSPORTATION
HIGHWAYS DIVISION

MAKAHA BRIDGE NOS. 3B, 4, 5 AND 5A

TYPICAL MODIFIED ENDPOST UPGRADE SECTIONS

FARRINGTON HIGHWAY RESURFACING
Vicinity of Kili Drive to Satellite Tracking Station Road
Federal Aid Project No. STP-093-1(026)

Scale: As Noted — Date: Apr. 2016

SHEET No. Q23 OF 34 SHEETS

FED. ROAD DIST. NO.	STATE	FED. AID PROJ. NO.	FISCAL YEAR	SHEET NO.	TOTAL SHEETS
HAWAII	HAW.	STP-093-1(026)	2016	72	110

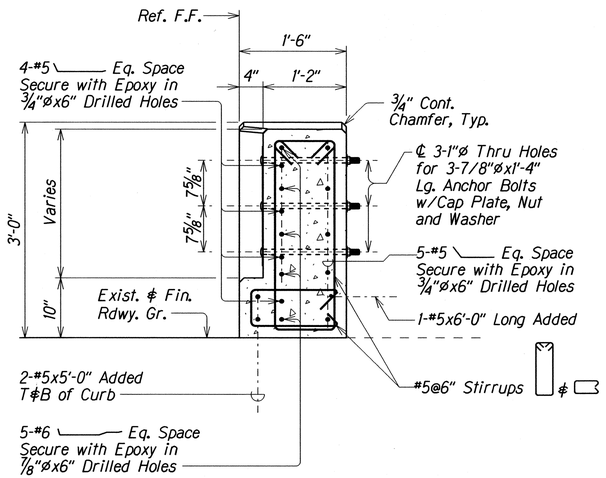

SECTION F
Scale: 1" = 1'-0"
Q5,Q8 | Q24
Q18 ∢ Q21

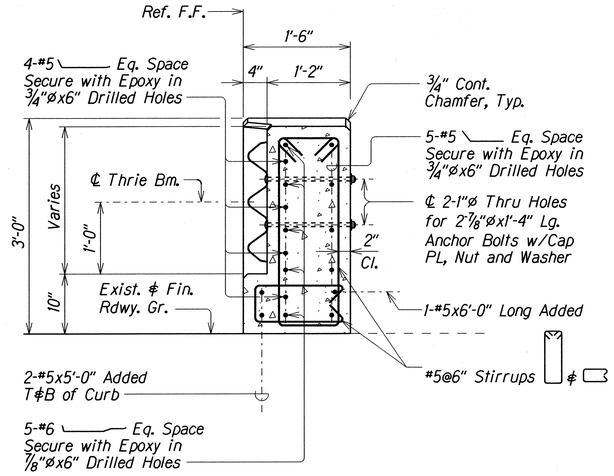

SECTION G
Scale: 1" = 1'-0"
Q5,Q8 | Q24
Q18 ∢ Q21

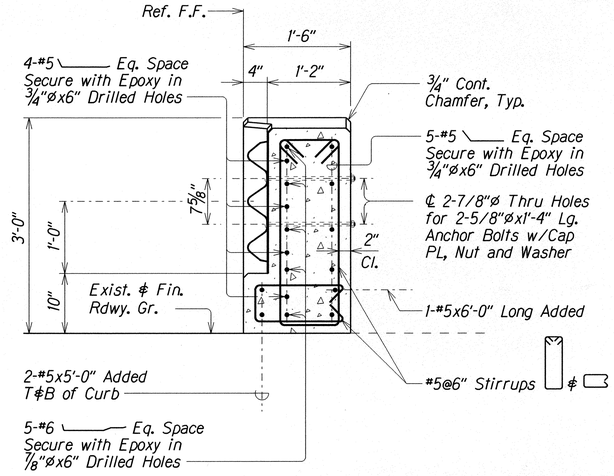

SECTION H
Scale: 1" = 1'-0"
Q5,Q8 | Q24
Q18 ∢ Q21

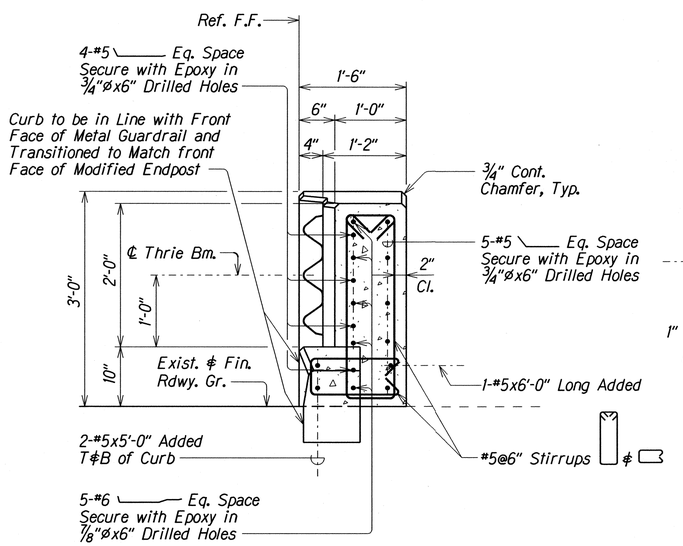

SECTION I
Scale: 1" = 1'-0"
Q5,Q8 | Q24
Q18 ∢ Q21

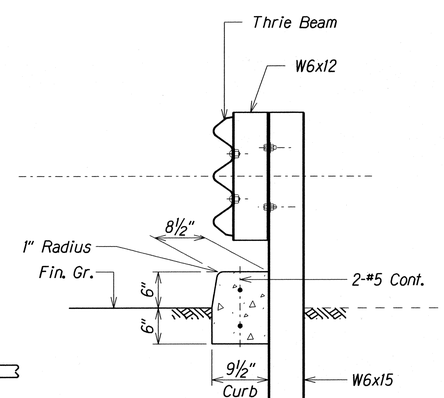

SECTION J
Scale: 1" = 1'-0"
Q5,Q8 | Q24
Q18 ∢ Q21

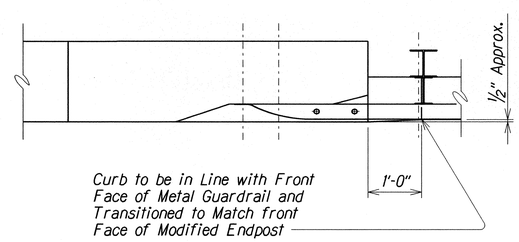

PARTIAL PLAN
Scale: 3/4" = 1'-0"

TYPICAL MODIFIED ENDPOST UPGRADE

ORIGINAL PLAN	SURVEY PLOTTED BY	XXX	DATE
	DRAWN BY		
	TRACED BY	XXX	XXX XXX
NOTE BOOK	DESIGNED BY	XXX	XXX XXX
	QUANTITIES BY	XXX	XXX XXX
N. 024.dgn	CHECKED BY	XXX	XXX XXX

STATE OF HAWAII
DEPARTMENT OF TRANSPORTATION
HIGHWAYS DIVISION

MAKAHA BRIDGE NOS. 3B, 4, 5 AND 5A
TYPICAL MODIFIED ENDPOST UPGRADE
SECTIONS AND PARTIAL PLAN
FARRINGTON HIGHWAY RESURFACING
Vicinity of Kili Drive to Satellite Tracking Station Road
Federal Aid Project No. STP-093-1(026)

Scale: As Noted — Date: Apr. 2016

SHEET No. Q24 OF 34 SHEETS

FED. ROAD DIST. NO.	STATE	FED. AID PROJ. NO.	FISCAL YEAR	SHEET NO.	TOTAL SHEETS
HAWAII	HAW.	STP-093-1(026)	2016	73	110

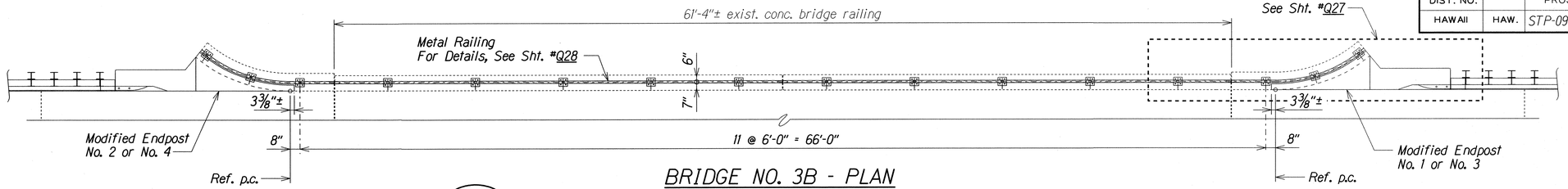

BRIDGE NO. 3B - PLAN

Scale: 1/4"=1'-0"

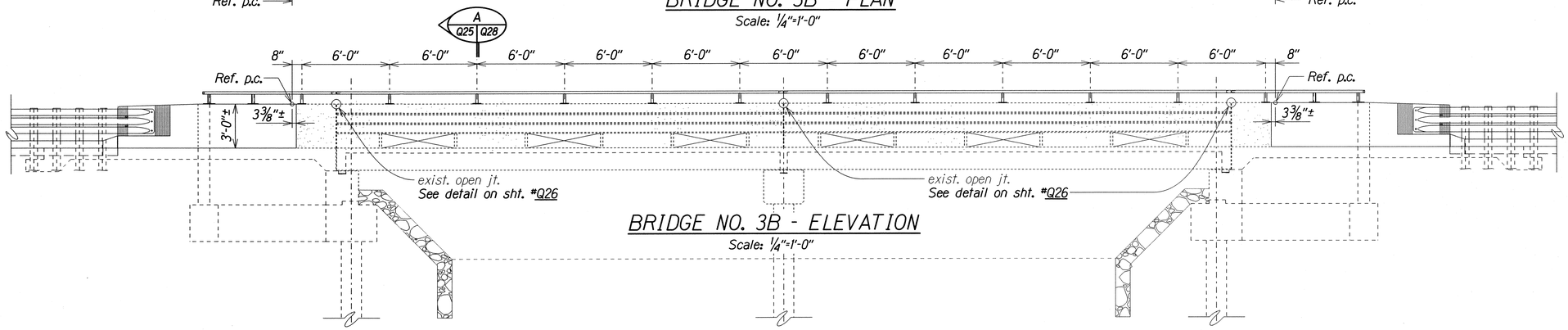

BRIDGE NO. 3B - ELEVATION

Scale: 1/4"=1'-0"

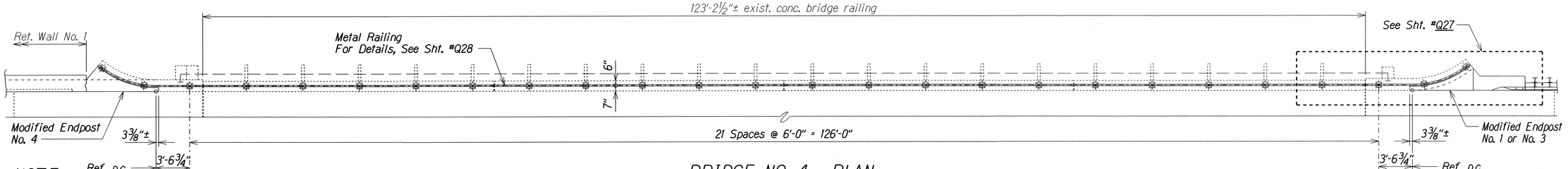

BRIDGE NO. 4 - PLAN

Scale: 3/16"=1'-0"

NOTE:

Endpost No. 2 not shown. Similar to Endpost No. 3 except Opposite Hand.

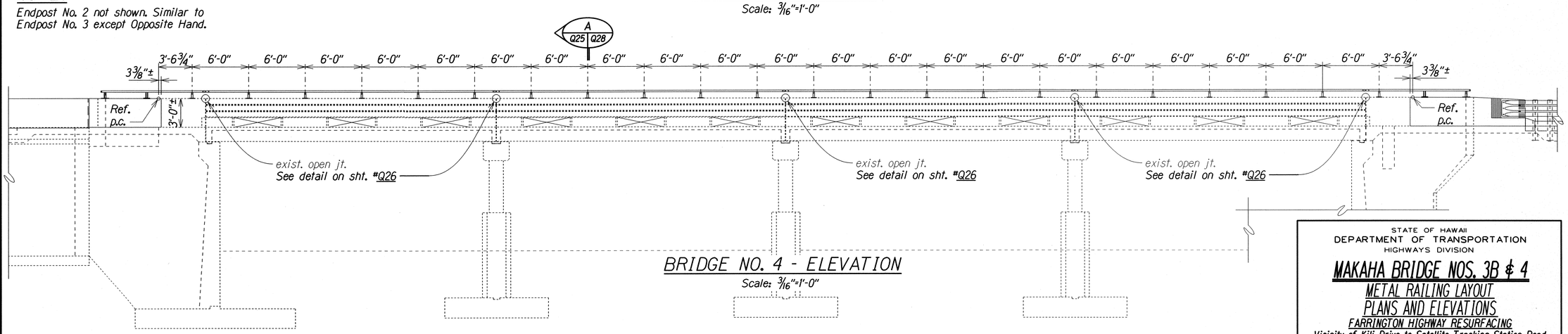

BRIDGE NO. 4 - ELEVATION

Scale: 3/16"=1'-0"

METAL RAILING LAYOUT

ORIGINAL PLAN	SURVEY PLOTTED BY XXX	DRAWN BY XXX	TRACED BY XXX	DESIGNED BY XXX	QUANTITIES BY XXX	CHECKED BY XXX	DATE XXX XXX XXX XXX
NOTE BOOK No. Q25.dgn							

STATE OF HAWAII
DEPARTMENT OF TRANSPORTATION
HIGHWAYS DIVISION

MAKAHA BRIDGE NOS. 3B & 4

METAL RAILING LAYOUT
PLANS AND ELEVATIONS
FARRINGTON HIGHWAY RESURFACING
Vicinity of Kili Drive to Satellite Tracking Station Road
Federal Aid Project No. STP-093-1(026)

Scale: As Noted — Date: Apr. 2016

SHEET No. Q25 OF 34 SHEETS

FED. ROAD DIST. NO.	STATE	FED. AID PROJ. NO.	FISCAL YEAR	SHEET NO.	TOTAL SHEETS
HAWAII	HAW.	STP-093-1(026)	2016	74	110

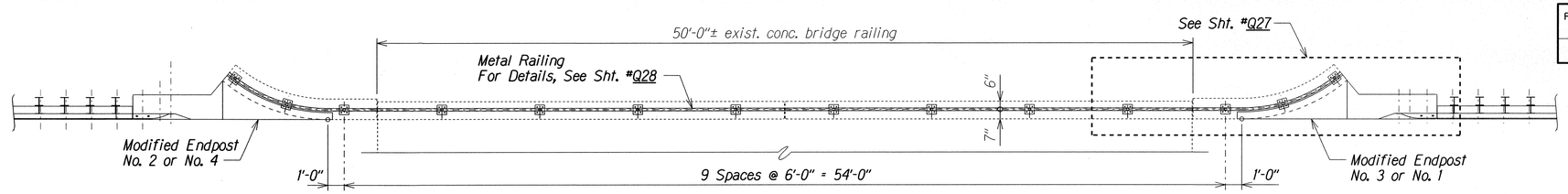

BRIDGE NO. 5 - PLAN

Scale: 1/4"=1'-0"

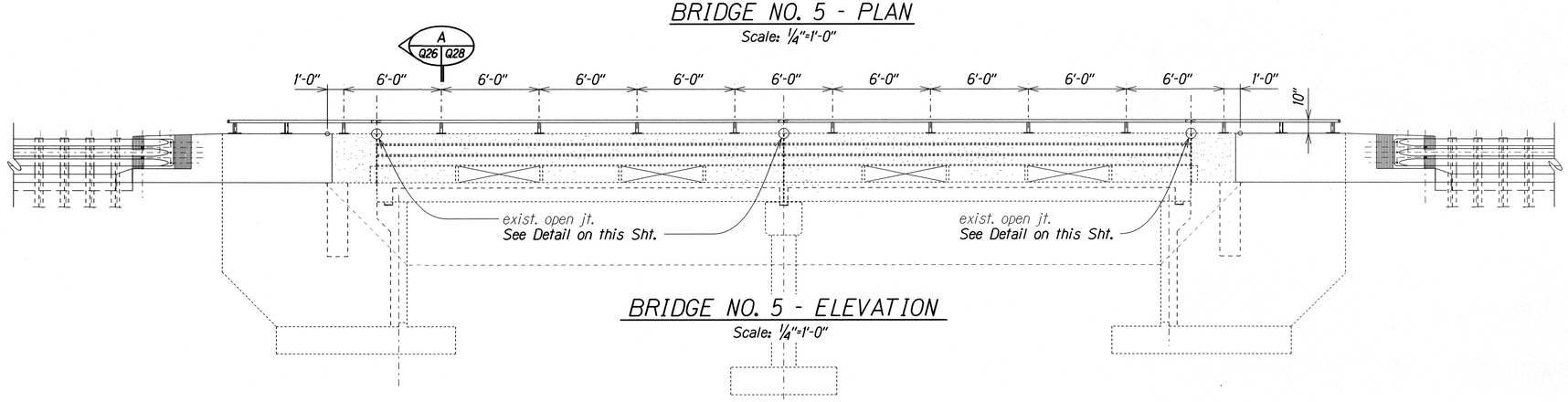

BRIDGE NO. 5 - ELEVATION

Scale: 1/4"=1'-0"

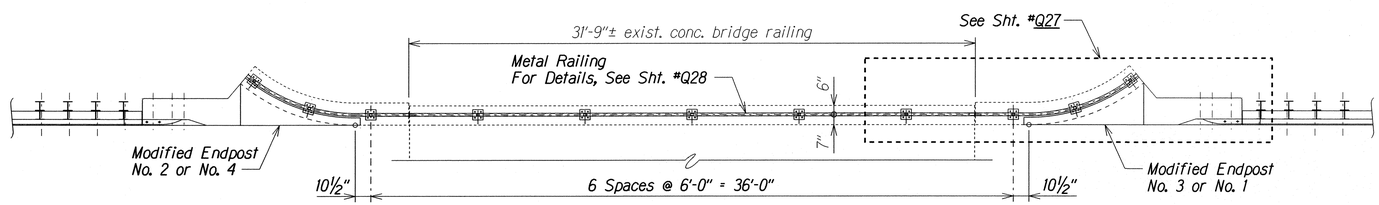

BRIDGE NO. 5A - PLAN

Scale: 1/4"=1'-0"

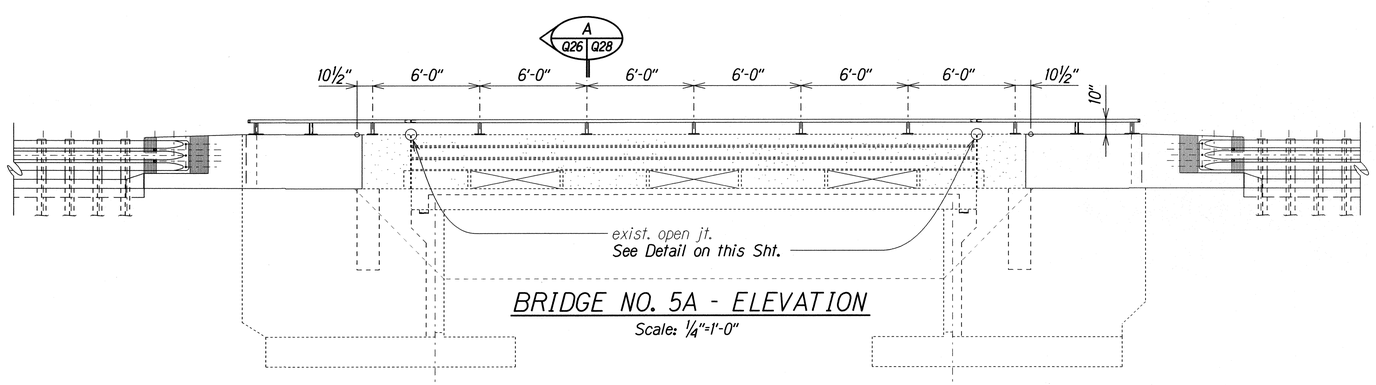

BRIDGE NO. 5A - ELEVATION

Scale: 1/4"=1'-0"

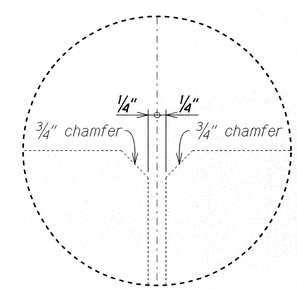

EXISTING OPEN JOINT DETAIL

Scale: 6"=1'-0"

METAL RAILING LAYOUT

ORIGINAL PLAN			
	SURVEY PLOTTED BY	XXX	DATE
	DRAWN BY	XXX	XXX XXX
	TRACED BY	XXX	XXX XXX
NOTE BOOK	DESIGNED BY	XXX	XXX XXX
	QUANTITIES BY	XXX	XXX XXX
No. Q26.dgn	CHECKED BY	XXX	XXX XXX

STATE OF HAWAII
DEPARTMENT OF TRANSPORTATION
HIGHWAYS DIVISION

MAKAHA BRIDGE NOS. 5 & 5A

METAL RAILING LAYOUT
PLANS, ELEVATIONS AND EXISTING OPEN JOINT DETAIL
FARRINGTON HIGHWAY RESURFACING
Vicinity of Kili Drive to Satellite Tracking Station Road
Federal Aid Project No. STP-093-1(026)

Scale: As Noted — Date: Apr. 2016

SHEET No. Q26 OF 34 SHEETS

FED. ROAD DIST. NO.	STATE	FED. AID PROJ. NO.	FISCAL YEAR	SHEET NO.	TOTAL SHEETS
HAWAII	HAW.	STP-093-1(026)	2016	75	110

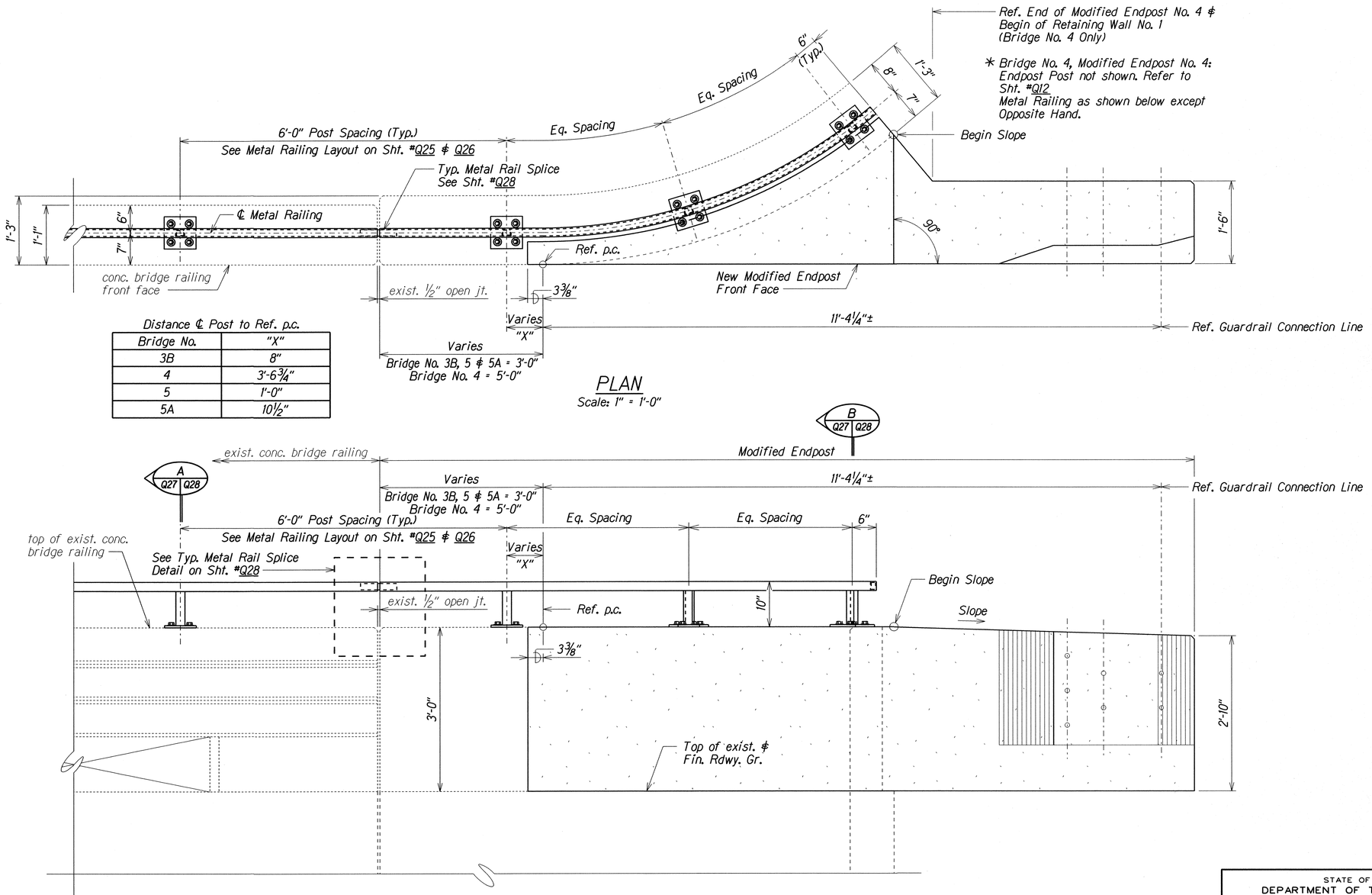

Distance ℄ Post to Ref. p.c.

Bridge No.	"X"
3B	8"
4	3'-6¾"
5	1'-0"
5A	10½"

NOTES:

1) See Sht. #Q34 for Metal Guardrail Type 3 Thrie Beam and Appurtenances Details.

2) Modified Endpost No. 3 as Shown Above for All Bridges. For all other Modified Endpost, Similar except as Noted, Mirrored and/or Opposite Hand.

ELEVATION
Scale: 1" = 1'-0"

TYPICAL METAL RAILINGS AT ENDPOST

ORIGINAL PLAN	SURVEY PLOTTED BY XXX	DATE
	DRAWN BY	XXX XXX
	TRACED BY	XXX XXX
NOTE BOOK	DESIGNED BY XXX	XXX XXX
	QUANTITIES BY XXX	XXX XXX
N. Q27.dgn	CHECKED BY XXX	XXX XXX

STATE OF HAWAII
DEPARTMENT OF TRANSPORTATION
HIGHWAYS DIVISION

MAKAHA BRIDGE NOS. 3B, 4, 5 AND 5A
TYPICAL METAL RAILING AT ENDPOST
PLAN AND ELEVATION
FARRINGTON HIGHWAY RESURFACING
Vicinity of Kili Drive to Satellite Tracking Station Road
Federal Aid Project No. STP-093-1(026)

Scale: As Noted Date: Apr, 2016

SHEET No. Q27 OF 34 SHEETS

FED. ROAD DIST. NO.	STATE	FED. AID PROJ. NO.	FISCAL YEAR	SHEET NO.	TOTAL SHEETS
HAWAII	HAW.	STP-093-1(026)	2016	76	110

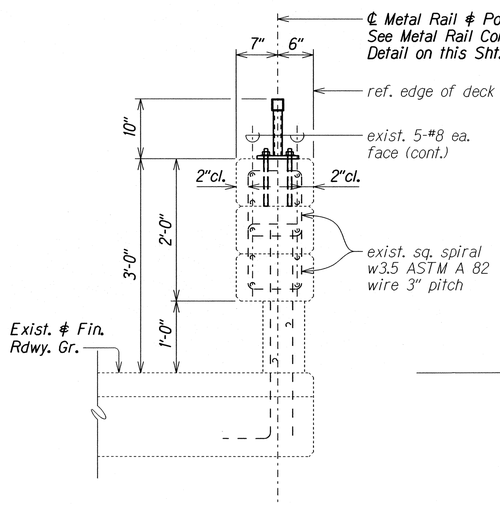

SECTION A (Q25,Q26 | Q28; Q27)
METAL RAIL AT BRIDGE
Scale: 1"=1'-0"

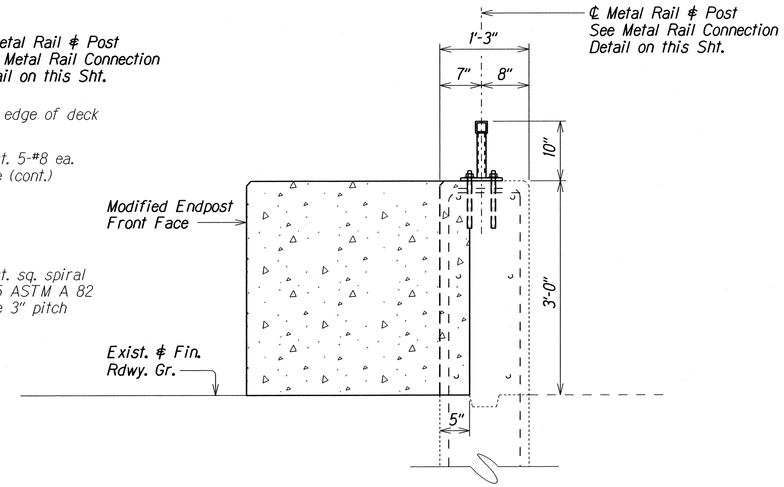

SECTION B (Q27 | Q28)
METAL RAIL AT ENDPOST
Scale: 1"=1'-0"

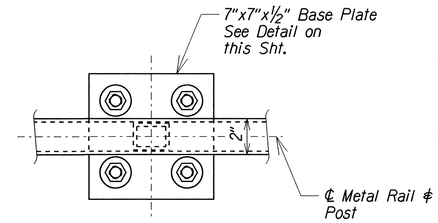

PLAN

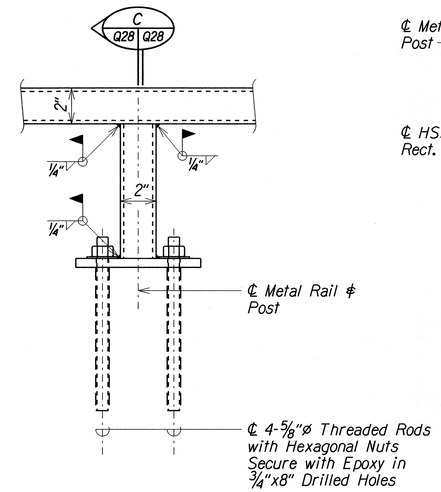

ELEVATION

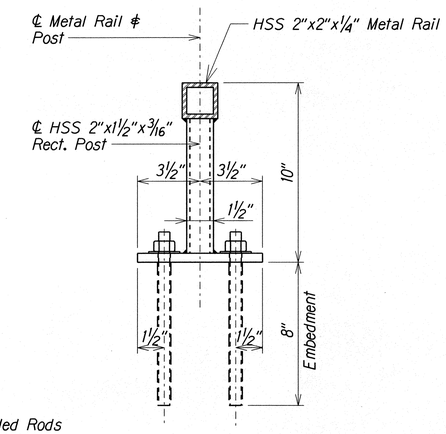

SECTION C (Q28 | Q28)

METAL RAIL CONNECTION DETAILS

Scale: 3"=1'-0"

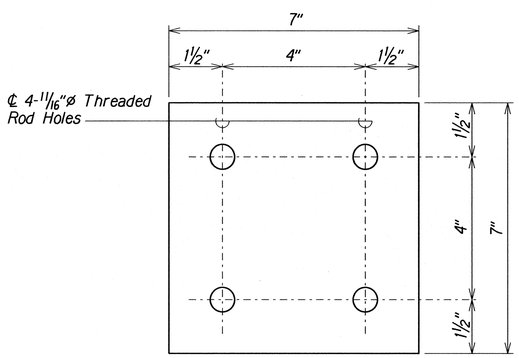

PLAN

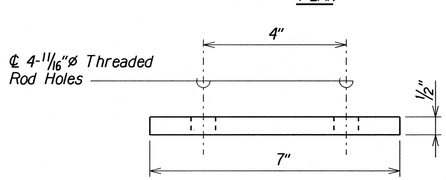

ELEVATION

BASE PLATE

Scale: 6"=1'-0"

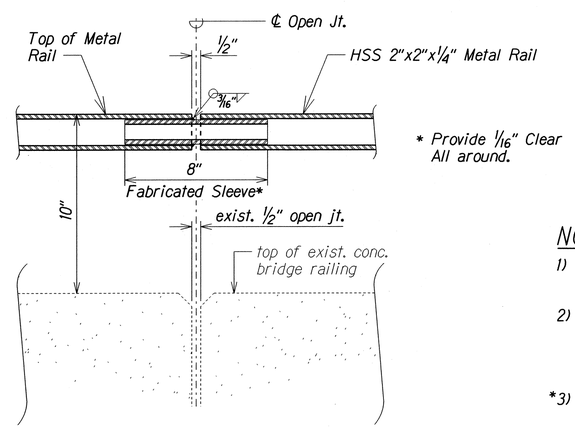

TYPICAL METAL RAIL SPLICE DETAIL

Scale: 3"=1'-0"

NOTES:

1) Contractor to Verify Location of Existing Reinforcing Prior to Fabrication.

2) Tolerance for Threaded Rod Placement as Per AISC Code of Standard Practice for Steel Buildings and Bridges March 18, 2005.

*3) Have Sleeve Welded to One Side Before Hot-dip. Provide 1/16 Clear All Around.

TYPICAL METAL RAILING DETAILS

ORIGINAL PLAN	SURVEY PLOTTED BY XXX	DATE XXX XXX
	DRAWN BY XXX	
	TRACED BY XXX	XXX XXX
NOTE BOOK	DESIGNED BY XXX	XXX XXX
	QUANTITIES BY XXX	XXX XXX
N. Q28.dgn	CHECKED BY XXX	XXX XXX

STATE OF HAWAII
DEPARTMENT OF TRANSPORTATION
HIGHWAYS DIVISION

MAKAHA BRIDGE NOS. 3B, 4, 5 AND 5A

TYPICAL METAL RAILING DETAILS
SECTIONS AND METAL RAIL CONNECTION DETAIL

FARRINGTON HIGHWAY RESURFACING
Vicinity of Kili Drive to Satellite Tracking Station Road
Federal Aid Project No. STP-093-1(026)

Scale: As Noted — Date: Apr. 2016

SHEET No. Q28 OF 34 SHEETS

FED. ROAD DIST. NO.	STATE	FED. AID PROJ. NO.	FISCAL YEAR	SHEET NO.	TOTAL SHEETS
HAWAII	HAW.	STP-093-1(026)	2016	CO 77	110

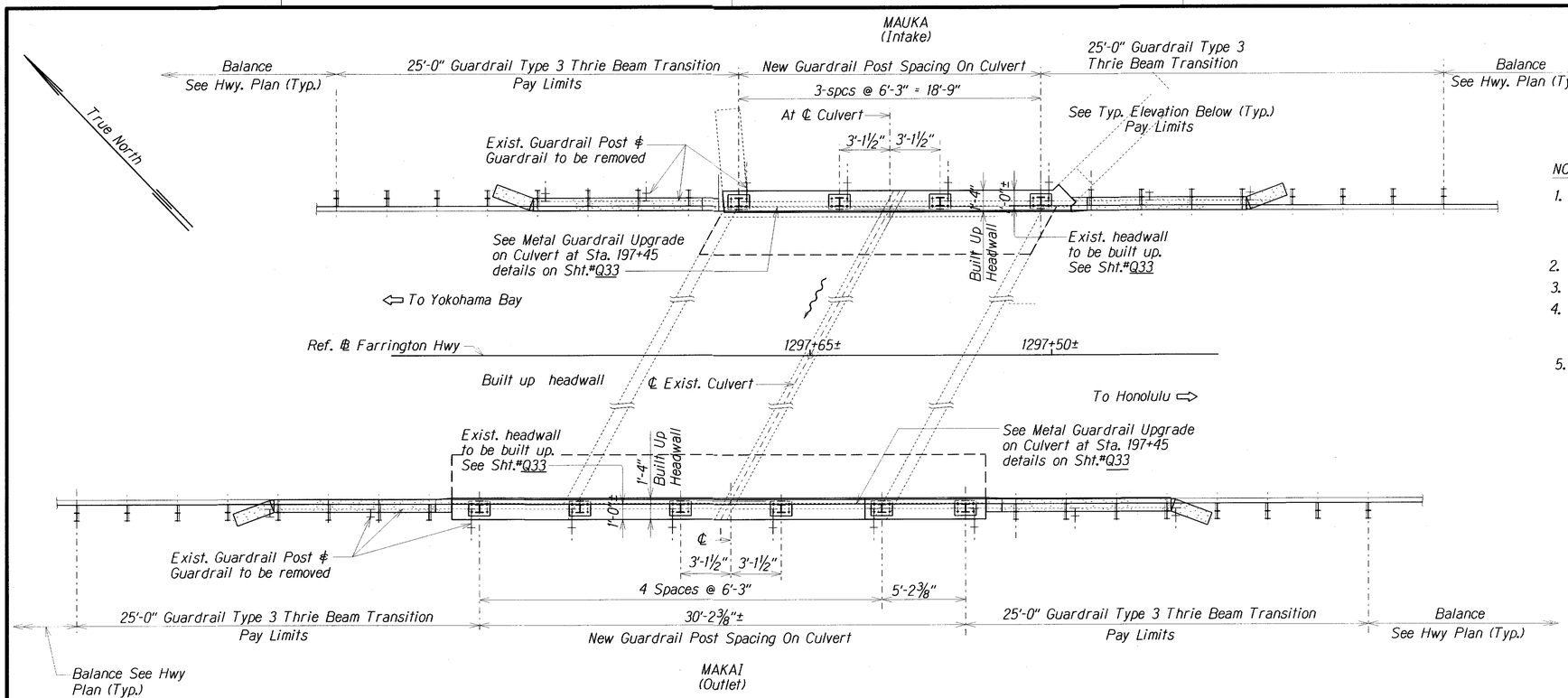

LAYOUT PLAN -- CULVERT at STA. 1297+65± △1

Scale: ¼" = 1'-0"

NOTE:

1. See Sht. No. Q31A for the Elevation that Illustrates the Typical 25'-0" Guardrail Type 3 Thrie Beam Transition from the last post on the Culvert. See the Hwy. Plans for the balance following the transition.
2. For Individual Culvert Details, See Shts. Q29, Q30 and Q31.
3. The Contractor Shall Verify measurements in the field.
4. All existing metal posts and guardrails to be removed within work limits. For removal of existing post and guardrail on existing Headwall, see Sht. Q33.
5. For Headwall Build-up details, see Sht. #Q33.

DATE	REVISION
8/18/16 △1	Changes made to expand ∮ clarify the information of the Thrie Bm. on the Culvert ∮ its transition to connect up with the "W" Bm.

STATE OF HAWAII
DEPARTMENT OF TRANSPORTATION
HIGHWAYS DIVISION

8'X5' TWIN-CELL CULVERT at STA. 1297+65±

LAYOUT PLAN

FARRINGTON HIGHWAY RESURFACING
Vicinity of Kili Drive to Satellite Tracking Station Road
Federal Aid Project No. STP-093-1(026)

Scale: As Noted — Date: Apr, 2016

SHEET No. Q29 OF 34 SHEETS

C.O. 77

ORIGINAL PLAN — NOTE BOOK — No. XXXXXX

		DATE
SURVEY PLOTTED BY	XXX	XXX/XXX
DRAWN BY	XXX	XXX/XXX
TRACED BY	XXX	XXX/XXX
DESIGNED BY	XXX	XXX/XXX
QUANTITIES BY	XXX	XXX/XXX
CHECKED BY	XXX	XXX/XXX

FED. ROAD DIST. NO.	STATE	FED AID PROJ. NO.	FISCAL YEAR	SHEET NO.	TOTAL SHEETS
HAWAII	HAW.	STP-093-1(026)	2016	C.O. 78	110

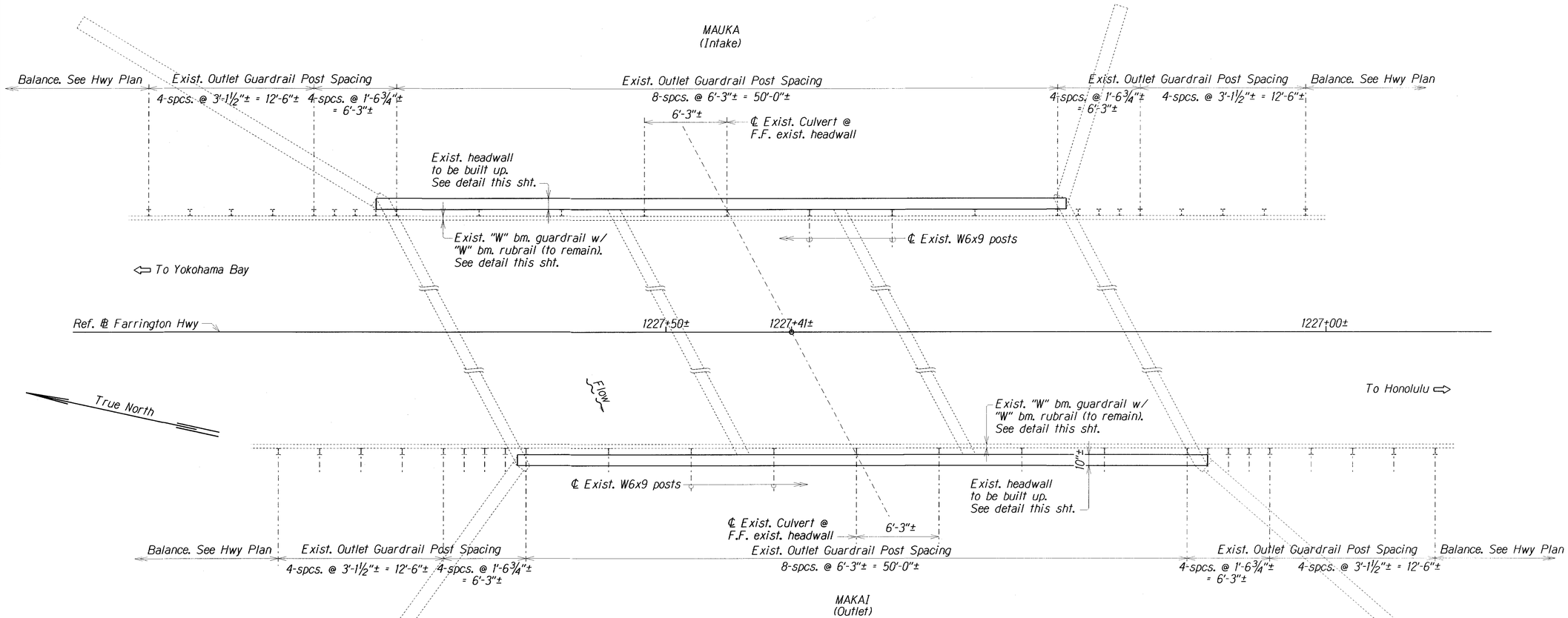

LAYOUT PLAN -- CULVERT at STA. 1227+41±

Scale: ¼" = 1'-0" △1

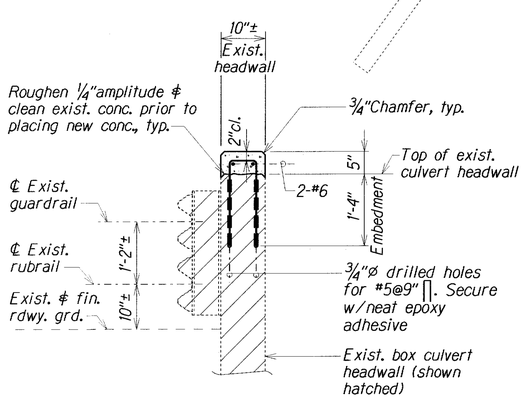

CULVERT HEADWALL BUILD-UP at STA. 1227+41± MAUKA & MAKAI

Scale: ¾" = 1'-0" △1

ORIGINAL PLAN	SURVEY PLOTTED BY	DATE
	DRAWN BY	
	TRACED BY	
NOTE BOOK	DESIGNED BY	
MakaiOnOuly.dgn	QUANTITIES BY	
No.	CHECKED BY	

dh4/dc/usr2/ksg/si/MakaiOnOuly/

DATE	REVISION
8/18/16 △1	Added scale to drawing.

STATE OF HAWAII
DEPARTMENT OF TRANSPORTATION
HIGHWAYS DIVISION

TRIPLE CELL CULVERT at STA. 1227+41±

LAYOUT PLAN and CULVERT HEADWALL BUILD-UP DETAIL

FARRINGTON HIGHWAY RESURFACING
Vicinity of Kili Drive to Satellite Tracking Station Road
Federal Aid Project No. STP-093-1(026)

Scale: As Noted Date: Apr. 2016

SHEET No. Q30 OF 34 SHEETS

C.O. 78

FED. ROAD DIST. NO.	STATE	FED. AID PROJ. NO.	FISCAL YEAR	SHEET NO.	TOTAL SHEETS
HAWAII	HAW.	STP-093-1(026)	2016	C0 79R	110

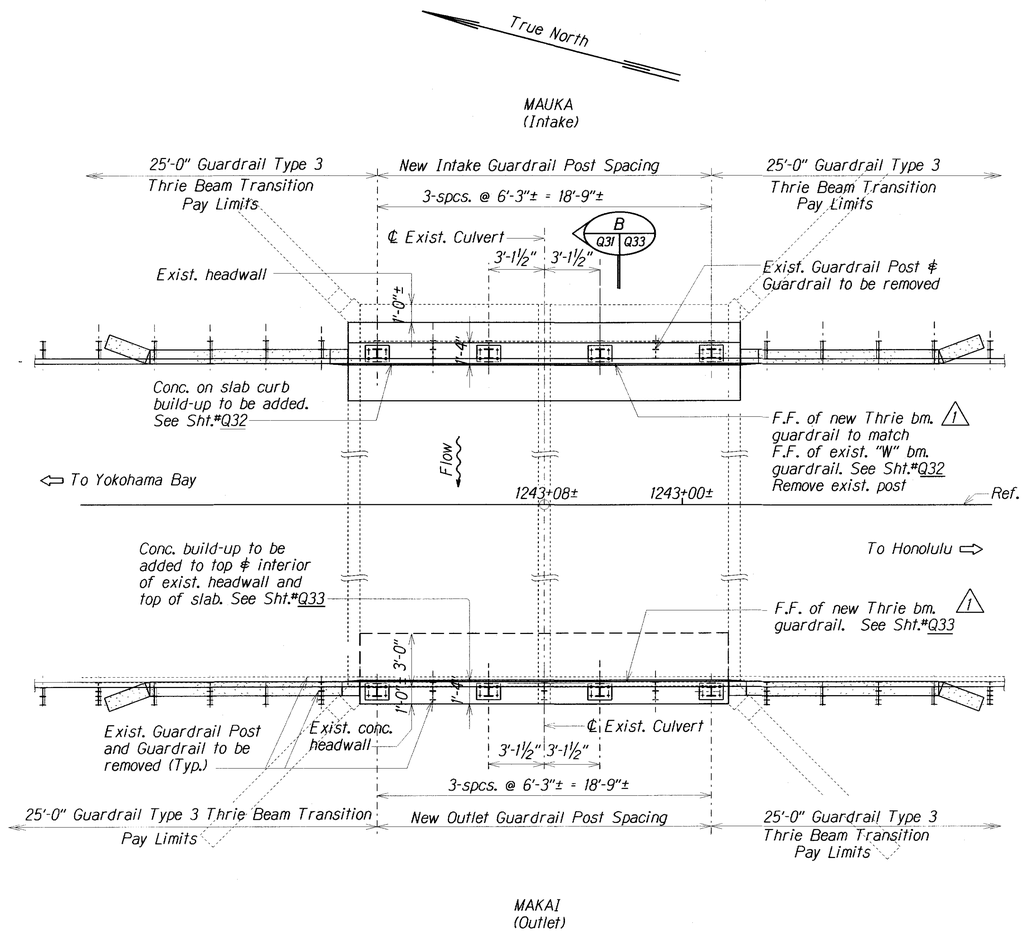

LAYOUT PLAN -- CULVERT at STA. 1243+08± 2

Scale: ¼" = 1'-0"

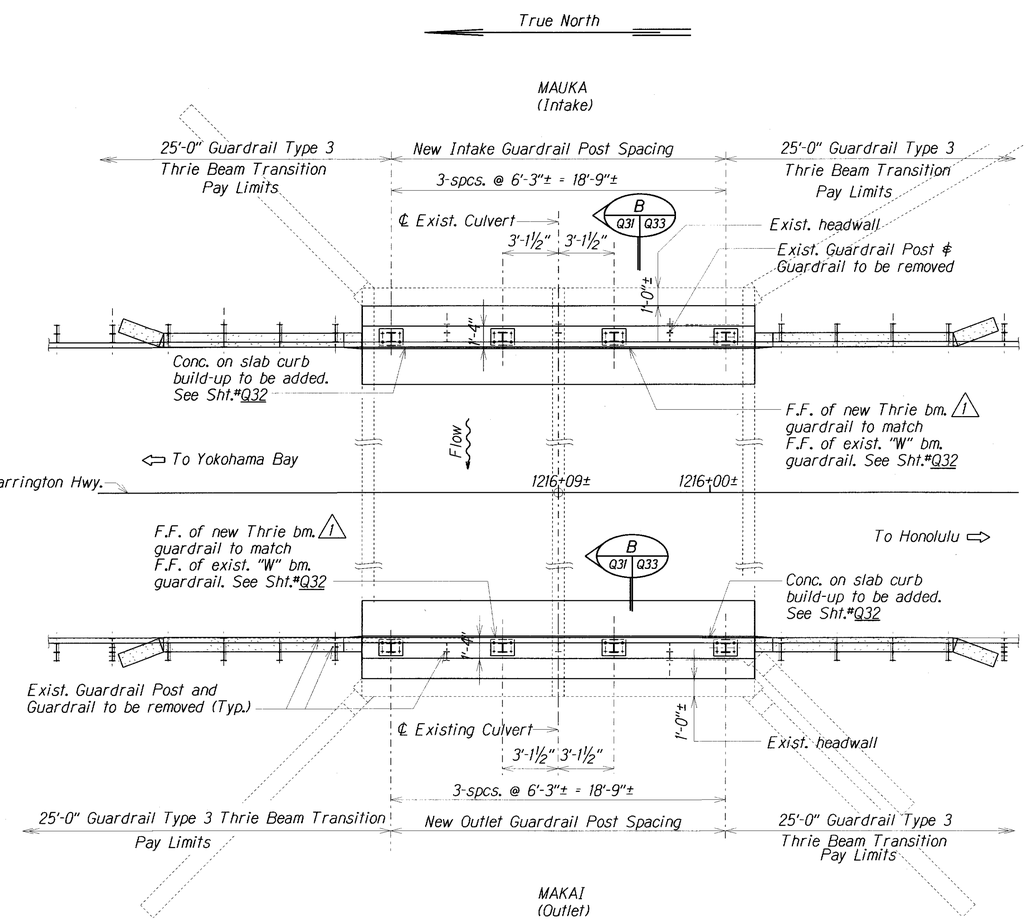

LAYOUT PLAN -- CULVERT at STA. 1216+09± 2

Scale: ¼" = 1'-0"

NOTE:

1. See Sht. No. Q31A for the Plan and Elevation that shows the Typical 25'-0" Guardrail Type 3 Thrie Beam Transition from the last post on the Culvert. See the Hwy. Plans for the balance following the transition.
2. For Individual Culvert Details, See Shts. #Q29, #Q30 and #Q31.
3. The Contractor Shall Verify measurements in the field.
4. All existing metal posts and guardrails to be removed within work limits. It is not shown for clarity. See Sht. #Q33 for removal on concrete parapet.
5. For Culvert at Sta. 1243+08, Makai Headwall Build-up details, see Sht. #Q33.

DATE	REVISION
6/16/16 1	Revised per Addendum #4
8/18/16 2	Changes made to expand & clarify the information of the Thrie Bm. on the Culvert & its transition to connect up with the "W" Bm.

STATE OF HAWAII
DEPARTMENT OF TRANSPORTATION
HIGHWAYS DIVISION

8'X10' TWIN-CELL CULVERTS at STA. 1243+08± & STA. 1216+09±

LAYOUT PLANS

FARRINGTON HIGHWAY RESURFACING
Vicinity of Kili Drive to Satellite Tracking Station Road
Federal Aid Project No. STP-093-1(026)

Scale: As Noted Date: Apr. 2016

SHEET No. Q31 OF 34 SHEETS

C.O. 79R

ORIGINAL PLAN | SURVEY PLOTTED BY | DRAWN BY | TRACED BY | DESIGNED BY | QUANTITIES BY | CHECKED BY | DATE
NOTE BOOK
WaiahoCulv. Q31
dbf/bf/usr2/ksg/s1/WaiahoCulv/

FED. ROAD DIST. NO.	STATE	FED. AID PROJ. NO.	FISCAL YEAR	SHEET NO.	TOTAL SHEETS
HAWAII	HAW.	STP-093-1(026)	2016	C.O. 79 S-1	110

NOTES:

1. ℄ of first post no closer than 9" to end of curb.
2. See Sht. #Q34 for Metal Guardrail Type 3 Thrie Beam and Appurtenances details.
3. For 8x5 Twin Cell Culvert @ Sta. 1279+55, see Sht. #Q29 for post spacing on Makai Side of culvert.

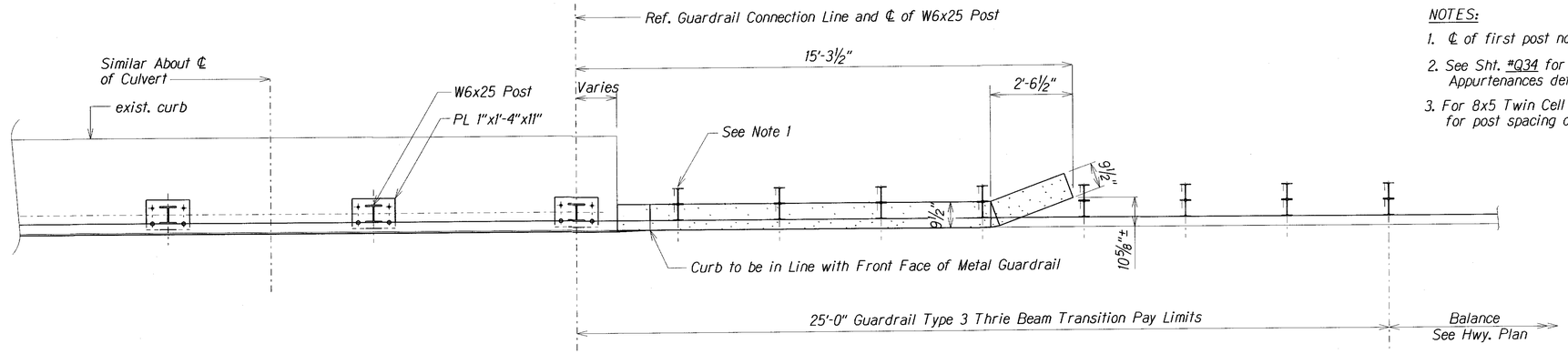

1 PLAN
Scale: ½" = 1'-0"

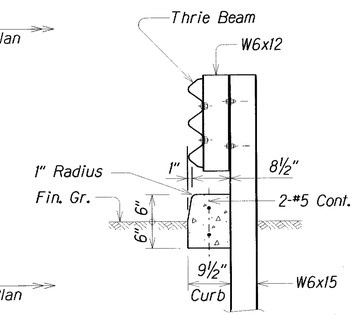

SECTION A Q31A Q31A
Scale: ¾" = 1'-0"

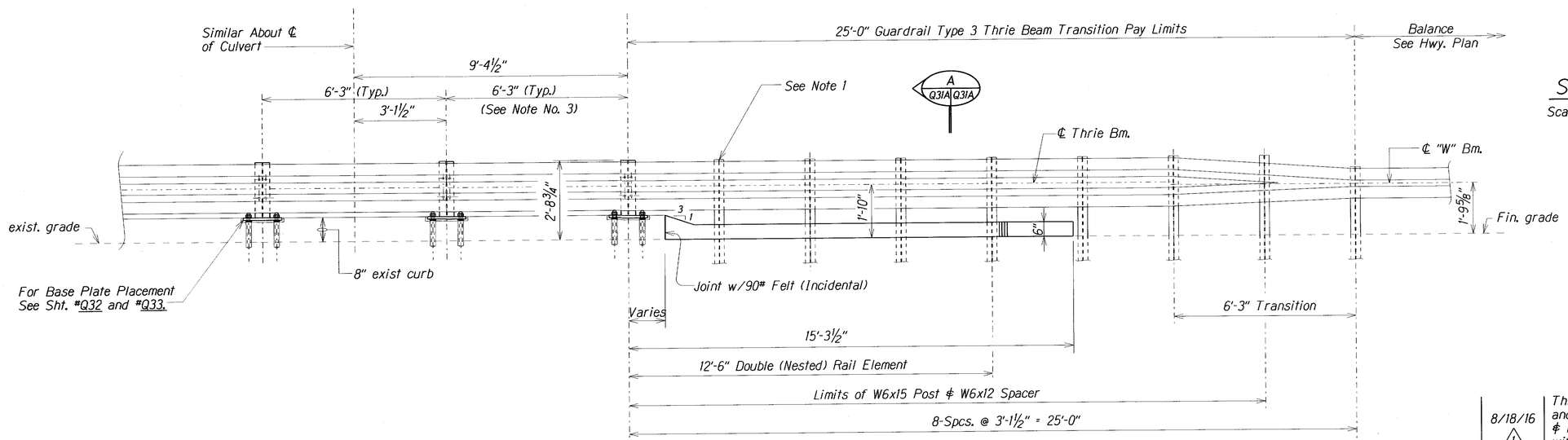

1 TYPICAL ELEVATION
Scale: ½" = 1'-0"

DATE	REVISION
8/18/16 1	This Sht. was added to clarify and show how the Typ. Thrie Bm. & its transition connect up with the "W" Bm.

STATE OF HAWAII
DEPARTMENT OF TRANSPORTATION
HIGHWAYS DIVISION

MODIFIED DELAWARE RETROFIT

PLAN, ELEVATION AND SECTION

FARRINGTON HIGHWAY RESURFACING
Vicinity of Kili Drive to Satellite Tracking Station Road
Project No. STP-093-1(026)

Scale: As Noted — Date: Aug. 2016

SHEET No. Q31A OF 34 SHEETS

C.O. 79 S-1

ORIGINAL PLAN	SURVEY PLOTTED BY	DATE
	DRAWN BY	
	TRACED BY	
NOTE BOOK	DESIGNED BY	
	QUANTITIES BY	
No.	CHECKED BY	

FED. ROAD DIST. NO.	STATE	FED. AID PROJ. NO.	FISCAL YEAR	SHEET NO.	TOTAL SHEETS
HAWAII	HAW.	STP-093-1(026)	2016	C.O. 80	110

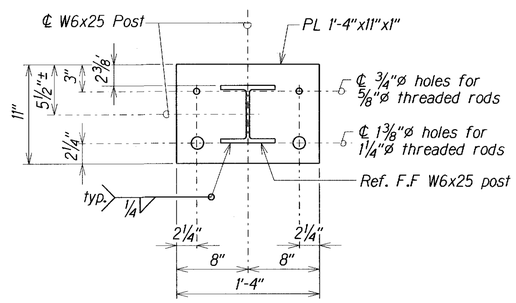

PLAN VIEW -- PL 1'-4"x11"x1"

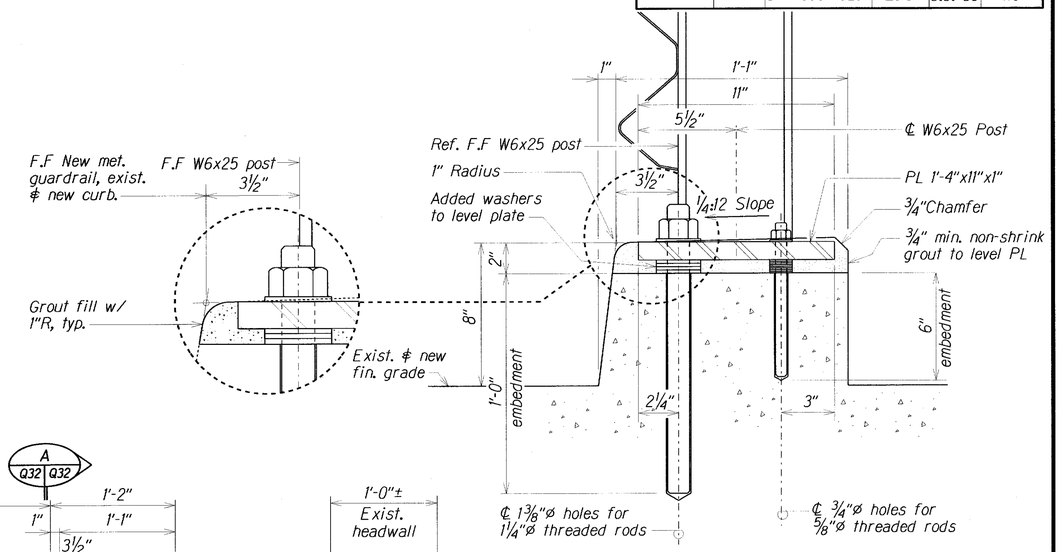

DETAIL 1 (Q32 | Q32)
Not to Scale

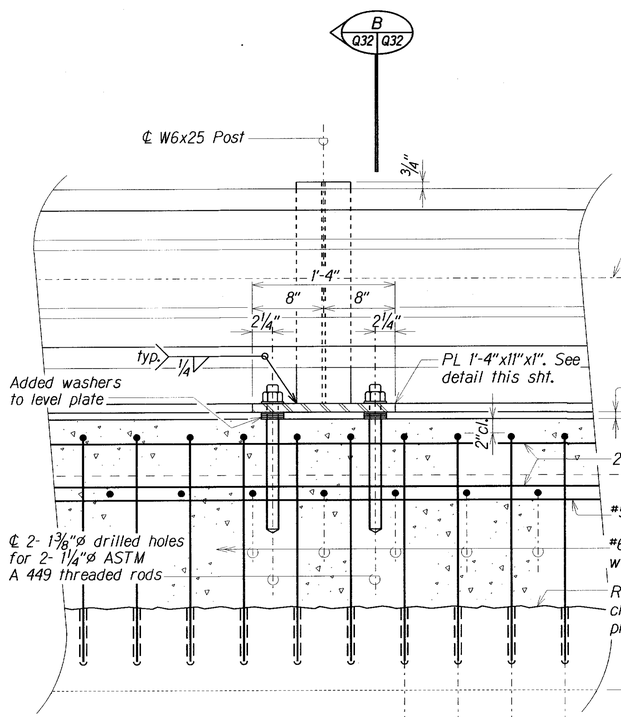

SECTION A (Q32 | Q32)
Scale: 1 1/2" = 1'-0"

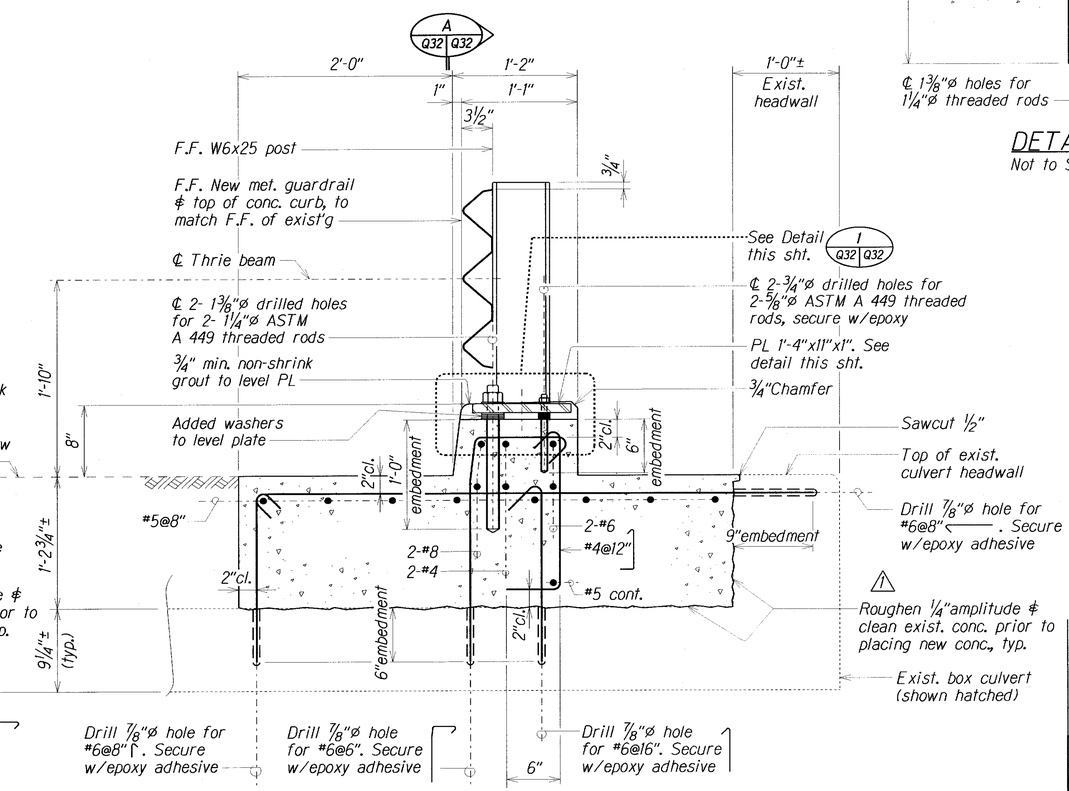

NOTE: Remove existing guardrail post

SECTION B (Q32 | Q32) Q31
Scale: 1 1/2" = 1'-0"

DATE	REVISION
8/18/16	Sht. number added to indicate where that section is cut. Label next to revision block moved to allow more space to place block.

STATE OF HAWAII
DEPARTMENT OF TRANSPORTATION
HIGHWAYS DIVISION

8'X10' TWIN-CELL CULVERTS at STA. 1243+08± & STA. 1216+09±

METAL GUARDRAIL UPGRADE ON SLAB CURB BUILD-UP DETAILS
FARRINGTON HIGHWAY RESURFACING
Vicinity of Kili Drive to Satellite Tracking Station Road
Federal Aid Project No. STP-093-1(026)

Scale: As Noted — Date: Apr, 2016

SHEET No. Q32 OF 34 SHEETS

METAL GUARDRAIL UPGRADES on CULVERT SLAB CURB BUILD-UP at STA. 1243+08± MAUKA and STA. 1216+09± MAUKA & MAKAI

Scale As Shown

ORIGINAL PLAN	SURVEY PLOTTED BY	DATE
	DRAWN BY	
	TRACED BY	
NOTE BOOK	DESIGNED BY	
MaukaCulv_q32	QUANTITIES BY	
MakaiCulv_q32	CHECKED BY	
No.		

d:\4/6/ics2/ksj/s1/MaukaCulv/

C.O. 80

FED. ROAD DIST. NO.	STATE	FED. AID PROJ. NO.	FISCAL YEAR	SHEET NO.	TOTAL SHEETS
HAWAII	HAW.	STP-093-1(026)	2016	81	110

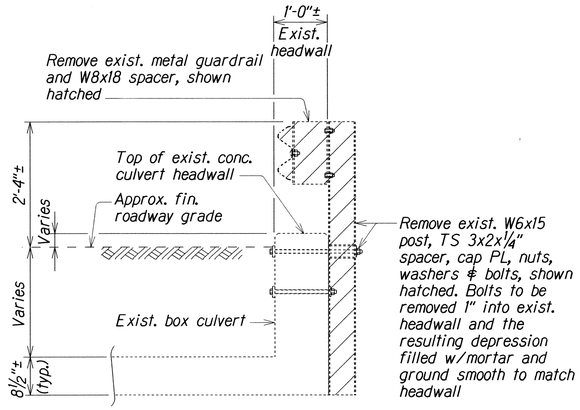

STA. 1297+65± MAUKA & MAKAI

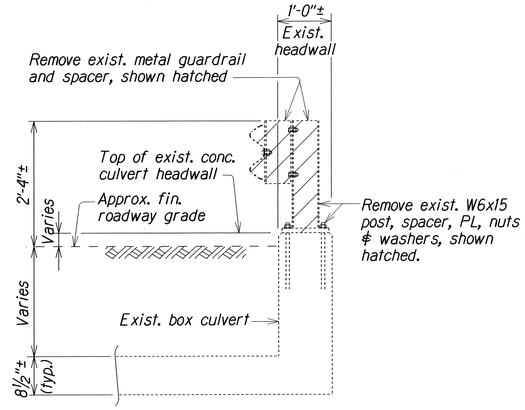

STA. 1243+08± MAKAI

PHASE 1 - REMOVAL of EXISTING RAILING

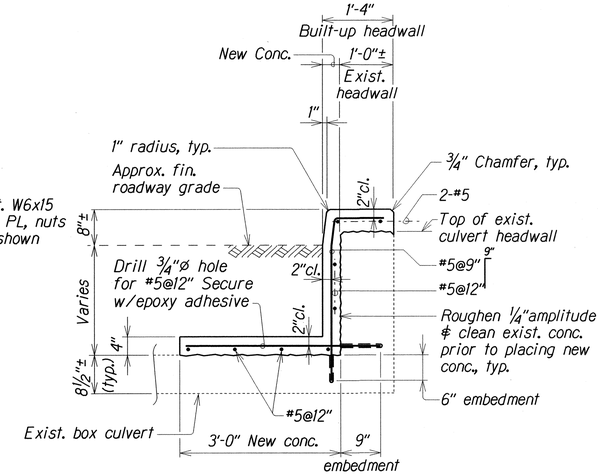

PHASE II - CONCRETE HEADWALL BUILD-UP

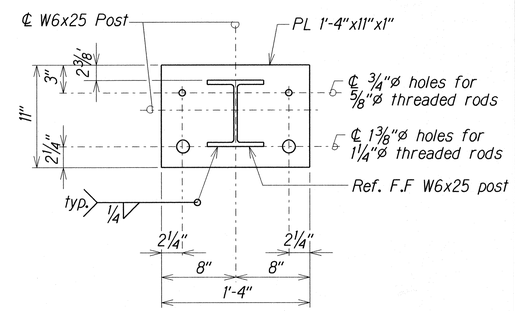

LEVELING PLATE PLAN

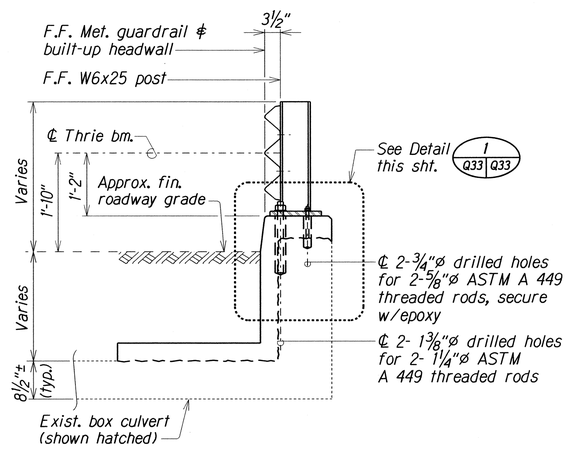

PHASE III - INSTALL NEW METAL RAILING

TYPICAL PHASING

Scale: ¾" = 1'-0"

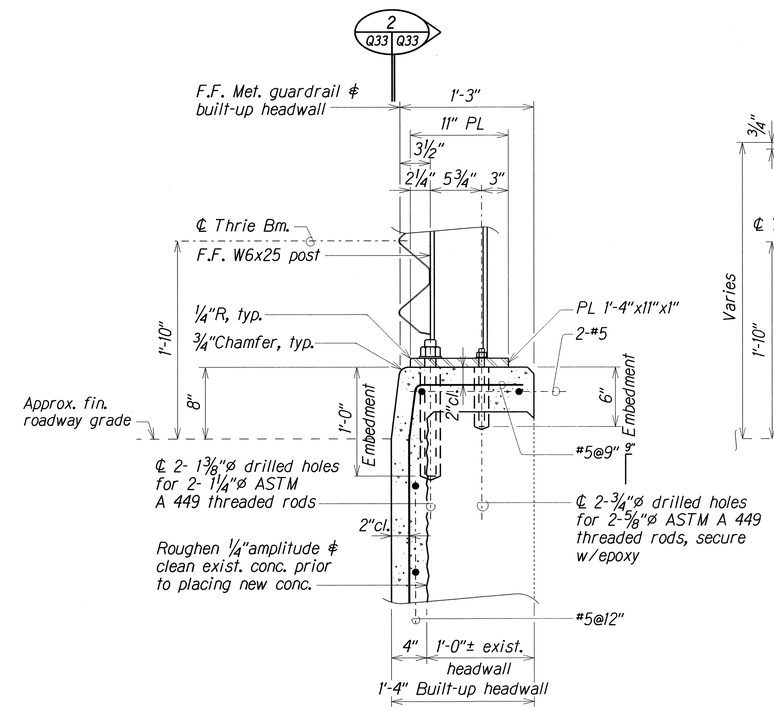

DETAIL 1 Q33 Q33

Scale: 1½" = 1'-0"

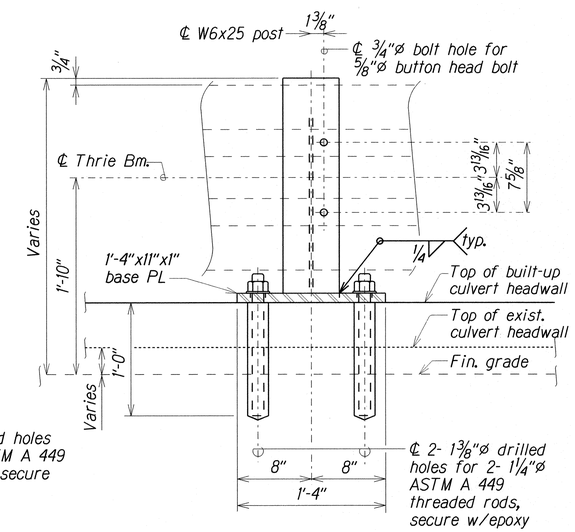

ELEVATION 2 Q33 Q33

METAL GUARDRAIL UPGRADE on CULVERT HEADWALL BUILD-UP at STA. 1297+65± MAUKA & MAKAI and STA. 1243+08± MAKAI

Scale As Shown

STATE OF HAWAII
DEPARTMENT OF TRANSPORTATION
HIGHWAYS DIVISION

8'x5' TWIN-CELL CULVERT at STA. 1297+65±
10'x8' TWIN-CELL CULVERT at STA. 1243+08±

METAL GUARDRAIL UPGRADE
FARRINGTON HIGHWAY RESURFACING
Vicinity Kili Drive to Satellite Tracking Station Road
Federal Aid Project No. STP-093-1(026)

Scale: As Noted — Date: Apr. 2016

SHEET No. Q33 OF 34 SHEETS

ORIGINAL PLAN	SURVEY PLOTTED BY	DATE
	DRAWN BY	
	TRACED BY	
NOTE BOOK	DESIGNED BY	
No.	QUANTITIES BY	
	CHECKED BY	

dgn/dc/usr2/kcq/st/MakahnCulv/MakahnCulv/

FED. ROAD DIST. NO.	STATE	FED. AID PROJ. NO.	FISCAL YEAR	SHEET NO.	TOTAL SHEETS
HAWAII	HAW.	STP-093-1(026)	2016	82	110

NOTES:

A. The work necessary to connect guardrail to concrete end post shall include all labor, materials, tools, equipment and incidentals necessary to complete the work and will not be paid for separately.

B. Lap terminal connector and rail element in direction of traffic to prevent snagging.

C. All anchor bolts shall be high strength bolts conforming to the requirements of ASTM 325 and Standard Specification, Section 713.04.

D. Anchor bolt length shall be such that a snug fit of the elements and full thread engagement plus 1/4" (max) is attained.

E. "Terminal Connector", "Transition Section" and thrie beam shall be fabricated from 10gauge steel conforming to the requirements of AASHTO M 180, Type II, Class B.

F. "Terminal Connector" and standard spacer, including all anchor bolts, cap PL, nuts and washers, shall be hot-dip galvanized after fabrication.

G. Cap PL shall be fabricated from ASTM A 36.

H. First 25'-0" of guardrail adjoining "Terminal Connector" shall be galvanized steel and supports spaced as shown on the detail drawings. This section of rail shall be placed on tangent to end post or parallel to roadway, unless conditions at site renders it impossible to do so. Flare point to be determined in field.

I. Double (nest 1st panel) thrie beam elements at all end post connections, except on highways with one-way traffic pattern, use single thrie beam elements at end post on trailing end only.

J. Where double (nested) beam occur, 12" "Back-up Plate" not required.

K. Heads of through anchor bolts shall be placed on the traffic side of the rail.

L. All steel shapes, rails and plates shall conform to ASTM A 36 specifications.

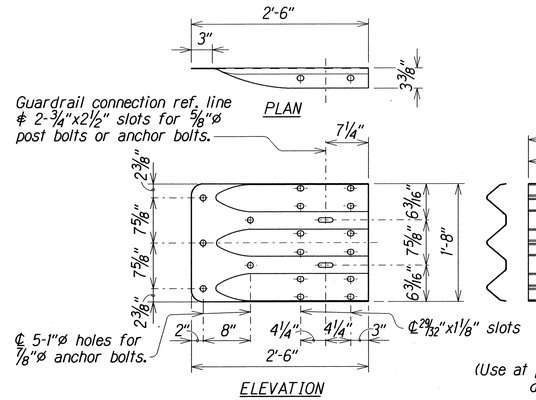

TERMINAL CONNECTOR
Scale: 1" = 1'-0"

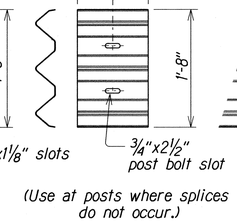

BACKUP PLATE
Scale: 1" = 1'-0"

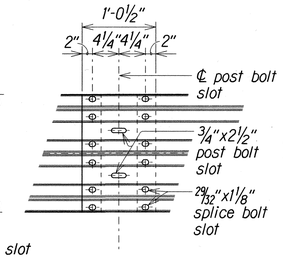

RAIL SPLICE
Scale: 1" = 1'-0"

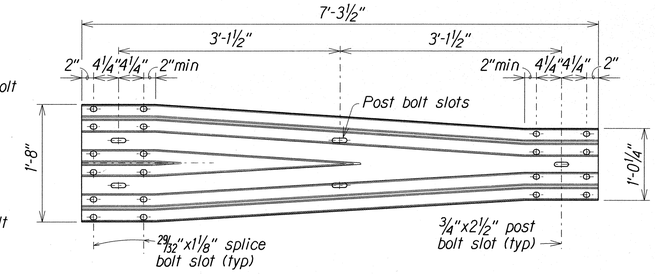

TRANSITION SECTION
Scale: 1" = 1'-0"

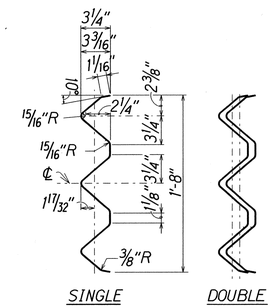

SECTION THRU RAIL ELEMENT
Scale: 1 1/2" = 1'-0"

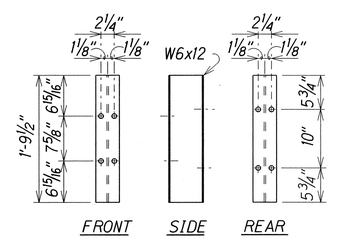

SPACER BLOCK DETAILS
Scale: 1" = 1'-0"

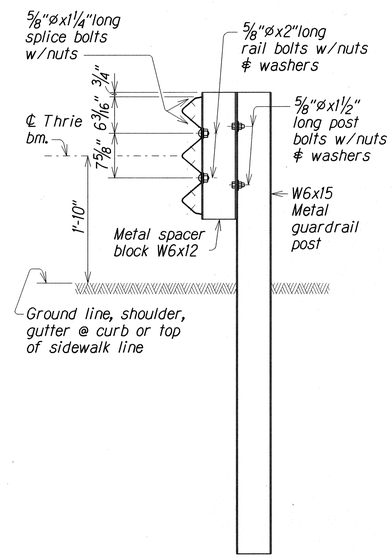

TYPICAL SECTION
METAL GUARDRAIL ON METAL POST WITH METAL SPACER BLOCK
Scale: 1" = 1'-0"

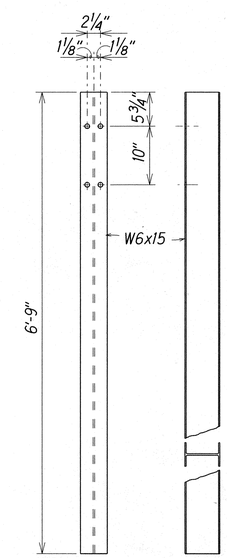

POST DETAILS
Scale: 1" = 1'-0"

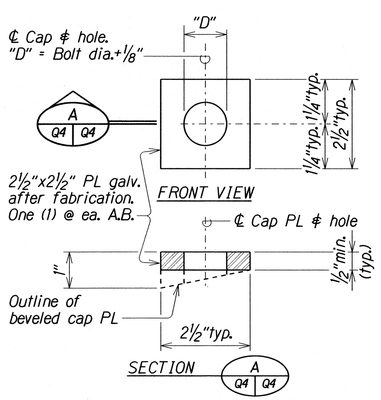

CAP (BEARING) PLATE DETAIL
Scale: 6" = 1'-0"

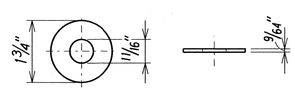

STEEL WASHER FOR 5/8"ø BOLT
Scale: 6" = 1'-0"

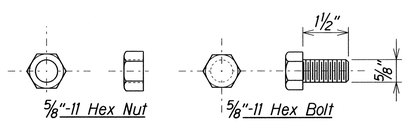

5/8"ø HEX BOLT & NUT
Scale: 6" = 1'-0"

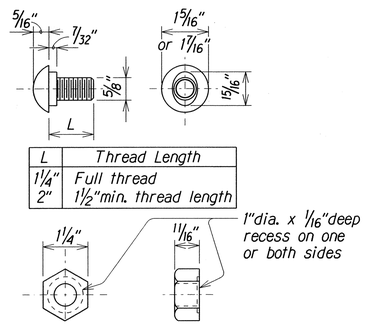

L	Thread Length
1 1/4"	Full thread
2"	1 1/2"min. thread length

5/8"ø BUTTON HEAD BOLT & RECESS NUT
Scale: 6" = 1'-0"

METAL GUARDRAIL TYPE 3 THRIE BEAM AND APPURTENANCES DETAILS

ORIGINAL PLAN	SURVEY PLOTTED BY	XXX	DATE XXX XXX
	DRAWN BY	XXX	
	TRACED BY	XXX	XXX XXX
NOTE BOOK	DESIGNED BY	XXX	XXX XXX
	QUANTITIES BY	XXX	XXX XXX
No. Q34	CHECKED BY	XXX	XXX XXX

STATE OF HAWAII
DEPARTMENT OF TRANSPORTATION
HIGHWAYS DIVISION

MAKAHA BRIDGE NOS. 3B, 4, 5 AND 5A

METAL GUARDRAIL TYPE 3 THRIE BEAM TRANSITION and APPURTENANCES DETAILS

FARRINGTON HIGHWAY RESURFACING
Vicinity of Kili Drive to Satellite Tracking Station Road
Federal Aid Project No. STP-093-1(026)

Scale: As Noted — Date: Apr, 2016

SHEET No. Q34 OF 34 SHEETS