FED. ROAD DIST. NO.	STATE	FED. AID PROJ. NO.	FISCAL YEAR	SHEET NO.	TOTAL SHEETS
HAWAII	HAW.	NH-093-1(19)	1999	27	49

GENERAL NOTES

GENERAL SPECIFICATIONS:

State of Hawaii, Department of Transportation Standard Specifications for Road and Bridge Construction, 1994 and Special Provisions

DESIGN SPECIFICATIONS:

1. AASHTO LRFD Bridge Design Specifications, 1st Edition, 1994, including 1996 and 1997 Interim Revisions

MATERIALS:

A. Reinforced Concrete: Class A, unless otherwise noted
B. Reinforced Steel: ASTM A 615, Grade 60
C. Admixture in concrete: See Special Provisions
D. All expansion and premolded joint filler shall be incidental to concrete and will not be paid for separately.
E. All structural steel shall be ASTM A 36 hot-dip galvanized after fabrication.
F. Metal Thrie Beam, Terminal Connector, Backup Plate and Transition Section shall be fabricated from 10 ga. steel, hot-dip galvanized after fabrication, conforming to requirements of AASHTO M 180.
G. W6x15 metal post and W6x12 metal spacer block shall be hot-dip galvanized after fabrication, unless noted otherwise.
H. All anchor bolts, washers and nuts shall be ASTM A 325 Type I, hot-dip galvanized after fabrication, unless noted otherwise. All threaded rods (studs) shall be ASTM A 449 Type I, hot-dip galvanized after fabrication.
I. All welding shall be in accordance with the current edition of Structural Steel Welding Code AWS D 1.1. Welding electrodes for structural steel shall be E 70.
J. Epoxy shall be "Glass Vial" or "Double Cartridge" type. Epoxies that require manual measuring or mixing will not be allowed. Epoxy shall meet the requirements of ASTM C 881, Type IV, Grade 3, Class C.

CONSTRUCTION METHODS:

A. Refer to Hawaii Standard Specifications for Road, Bridge and Public Works Construction, 1994 Edition and Special Provisions.
B. Except as noted otherwise, all vertical dimensions are measured plumb.
C. For concrete finish, see Standard Specifications and Special Provisions.
D. For steel reinforcing, stagger all splices where possible.
E. Steel reinforcing shall be supported, bent and placed as per the ACI Detailing Manual, 1994.
F. The minimum cover measured from the surface of the concrete to the face of any reinforcing bars shall be as follows, except as noted otherwise:
   a. Concrete cast against a smooth surface or finished to a smooth surface: 2"
   b. Concrete cast against and permanently exposed to earth: 3"
G. At time concrete is placed, reinforcing shall be free from mud, oil, laitance or other coatings adversely affecting bond capacity.
H. Reinforcement, dowels and other embedded items shall be positively secured before pouring.
I. All existing concrete face receiving new concrete in the finish product shall be roughened and cleaned prior to placement of new pour. See Special Provisions for additional requirements.
J. All footings shall bear on firm undisturbed natural soils or properly compacted structural fill.
K. One inch (1") joint to be formed with Premolded Joint Filler. Item is considered incidental and will not be paid for separately. See Special Provisions for additional requirements.
L. Large impacting or vibratory type equipment will not be permitted in the drilling of holes.
M. The holes for anchor bolts shall be drilled as shown into the existing concrete surfaces prior to fabrication of structural steel elements. If the drill contacts any existing rebar, the hole shall be filled with epoxy grout and a replacement hole shall be drilled. The Contractor shall not damage any existing rebars. Any damage by the Contractor shall be repaired at the Contractor's expense and at no cost to the State.

REFERENCE:

A. Refer to Standard Plans for additional details and notes not covered by details and typical drawings.

GENERAL:

A. All items noted incidental will not be paid for separately.
B. The Contractor shall verify the locations of all existing utility lines and notify their respective owners before commencing with any work.
C. The Contractor shall verify all grades and dimensions in the field before commencing with any work.
D. The Contractor shall be solely responsible for the protection of adjacent property, utilities and existing and new structures from damage due to construction. Repairing any damage shall be at the Contractor's own expense and at no cost to the State.
E. Unless noted otherwise, chamfer all exposed concrete edges three-quarters (3/4) of an inch.

SYMBOLS AND ABBREVIATIONS

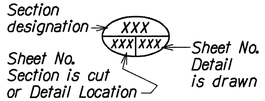

Abut.	Abutment
AB	Anchor Bolt
Alum.	Aluminum
Approx.	Approximate
Bal.	Balance
Beg.	Begin, Beginning
Brg., Brgs.	Bearing, Bearings
℄	Center Line
Cl., Clr.	Clear
Conc.	Concrete
Cont.	Continuous
Det.	Detail
Dia., ø	Diameter
Dim.	Dimension
EA, Ea., ea.	Each
Elev.	Elevation
Exist.	Existing
Exp., (E)	Expansion
F.F.	Front Face
Fin.	Finish
Ga.	Gage, Gauge
Galv.	Galvanized
Gr.	Grade
HS	High Strength
Hwy.	Highway
Jt.	Joint
L.F., Lin. Ft.	Linear Feet
Lg.	Long
L.S.	Lump Sum
Max.	Maximum
Min.	Minimum
No., #	Number
o/s, O/S	Offset
PL	Plate
R	Radius
Rdwy	Roadway
Ref.	Reference
Reinf.	Reinforcement
Req'd	Required
Sect.	Section
Sht.	Sheet
Spcs.	Spaces
Spcd.	Spaced
Spcg.	Spacing
Sta.	Station
Thk.	Thick, Thickness
Typ.	Typical
w/	With

ORIGINAL PLAN	SURVEY PLOTTED BY KSG, LMA	DATE OCT 1998
NOTE BOOK	DRAWN BY • • • • •	
	TRACED BY DKY	OCT 1998
	DESIGNED BY DKY	OCT 1998
No.	QUANTITIES BY DKY	OCT 1998
	CHECKED BY DCO	OCT 1998

STATE OF HAWAII
DEPARTMENT OF TRANSPORTATION
HIGHWAYS DIVISION

KEANANOIO STREAM BRIDGE
GENERAL NOTES, ABBREVIATIONS & SYMBOLS
FARRINGTON HIGHWAY IMPROVEMENTS
VICINITY OF TRACKS BEACH PARK
F.A.P. Project No. NH-093-1(19)

Scale: As Noted Date: Mar. 1999

SHEET No. 01 OF 9 SHEETS

FED. ROAD DIST. NO.	STATE	FED. AID PROJ. NO.	FISCAL YEAR	SHEET NO.	TOTAL SHEETS
HAWAII	HAW.	NH-093-1(19)	1999	28	49

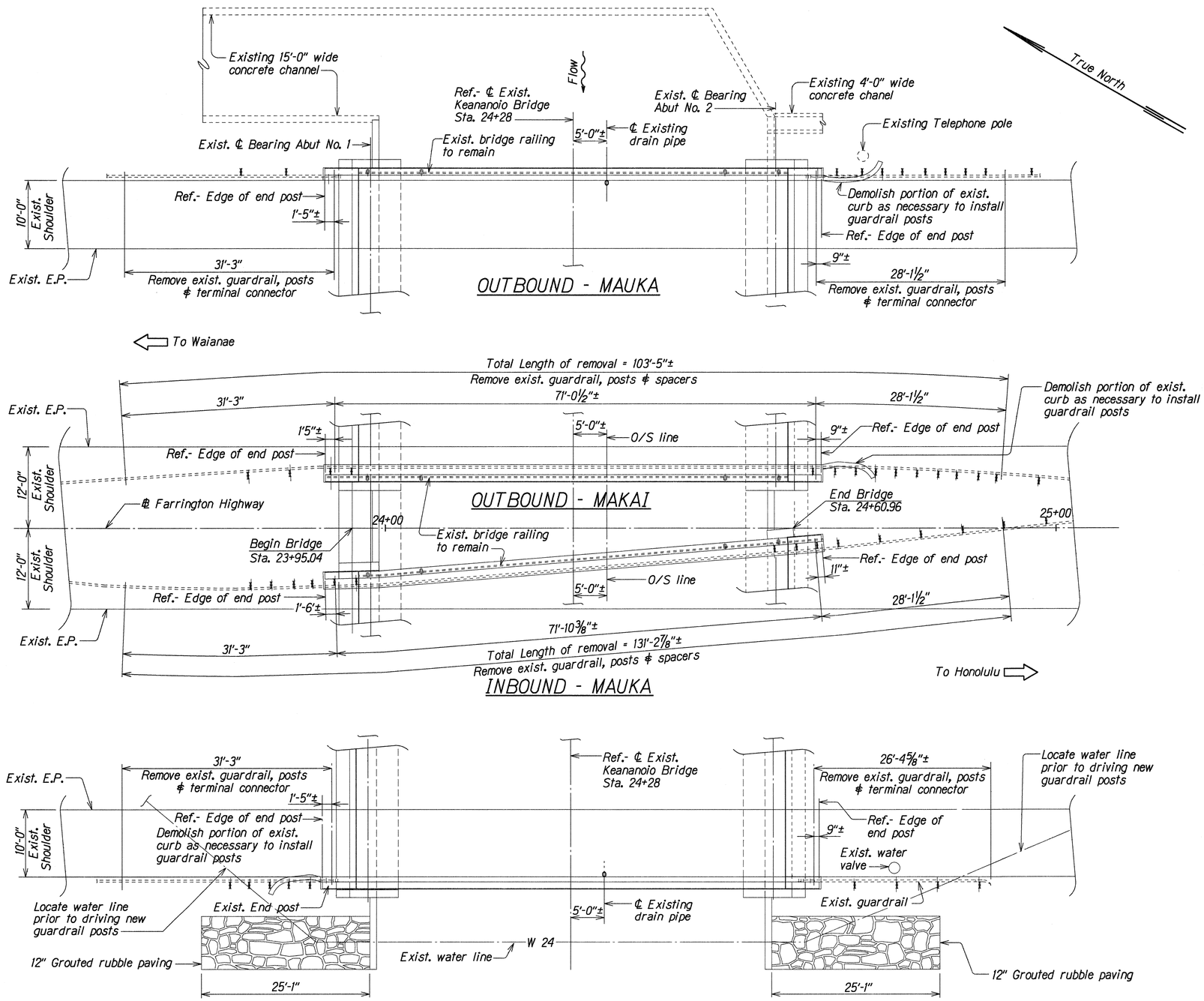

EXISTING PLAN

Scale : ⅛" = 1'-0"

ORIGINAL PLAN	SURVEY PLOTTED BY	LMA, CHO	DATE OCT 1998
	DRAWN BY		
	TRACED BY	DKY	OCT 1998
NOTE BOOK	DESIGNED BY	DKY	OCT 1998
No. (0000)	QUANTITIES BY	DKY	OCT 1998
	CHECKED BY	DCO	OCT 1998

STATE OF HAWAII
DEPARTMENT OF TRANSPORTATION
HIGHWAYS DIVISION

KEANAOIO STREAM BRIDGE

EXISTING PLAN

FARRINGTON HIGHWAY IMPROVEMENTS
VICINITY OF TRACKS BEACH PARK
F.A.P. Project No. NH-093-1(19)

Scale: As Noted — Date: Mar. 1999

SHEET No. Q2 OF 9 SHEETS

FED. ROAD DIST. NO.	STATE	FED. AID PROJ. NO.	FISCAL YEAR	SHEET NO.	TOTAL SHEETS
HAWAII	HAW.	NH-093-1(19)	1999	29	49

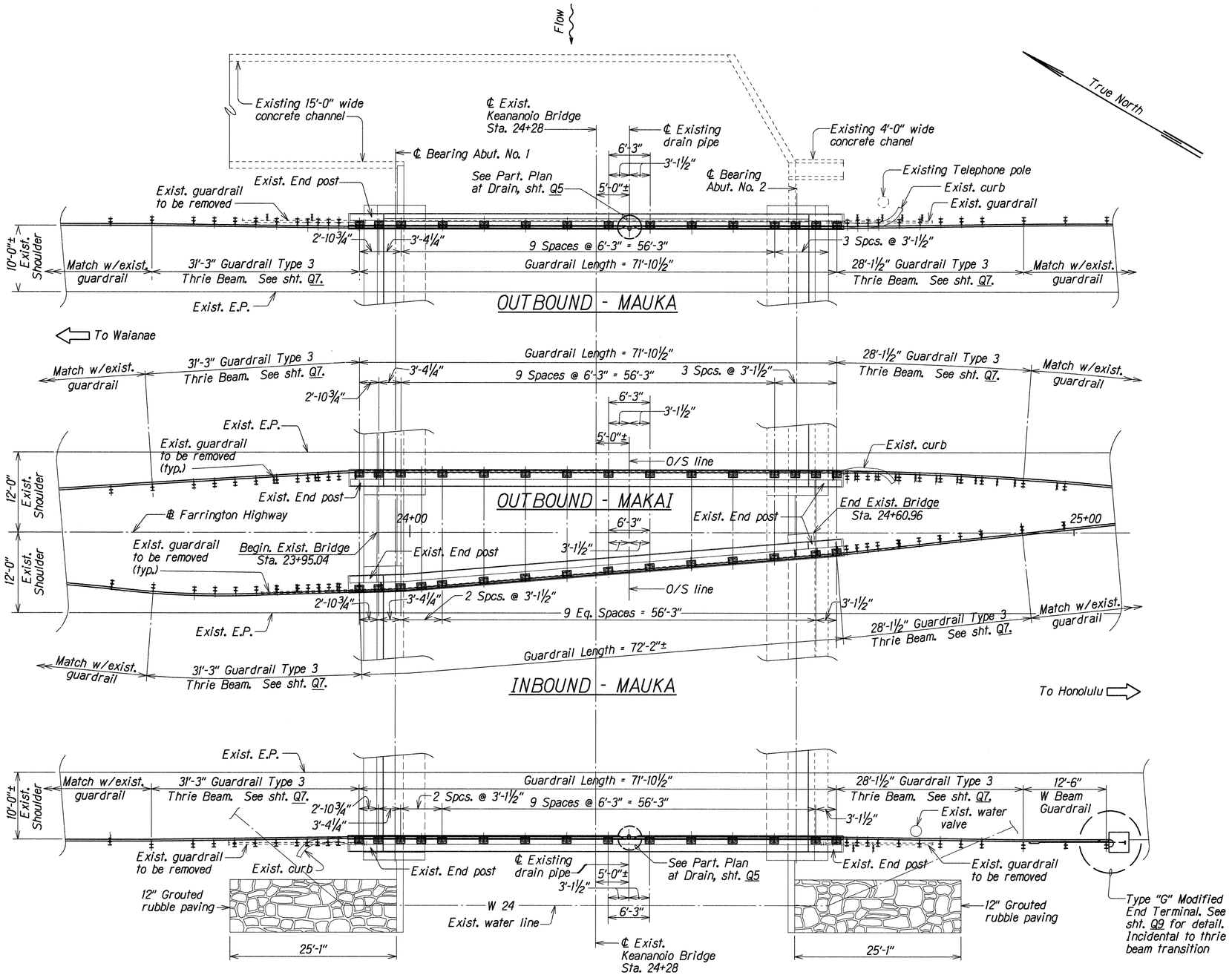

LAYOUT PLAN

Scale : ⅛" = 1'-0"

ORIGINAL PLAN	SURVEY PLOTTED BY LMA, CHO	DATE OCT 1998
	DRAWN BY	OCT 1998
	TRACED BY DKT	OCT 1998
NOTE BOOK	DESIGNED BY DKT	OCT 1998
	QUANTITIES BY DCO	OCT 1998
No. CL0003	CHECKED BY	

STATE OF HAWAII
DEPARTMENT OF TRANSPORTATION
HIGHWAYS DIVISION

KEANAOIO STREAM BRIDGE

LAYOUT PLAN

FARRINGTON HIGHWAY IMPROVEMENTS
VICINITY OF TRACKS BEACH PARK
F.A.P. Project No. NH-093-1(19)

Scale: As Noted — Date: Mar. 1999

SHEET No. Q3 OF 9 SHEETS

FED. ROAD DIST. NO.	STATE	FED. AID PROJ. NO.	FISCAL YEAR	SHEET NO.	TOTAL SHEETS
HAWAII	HAW.	NH-093-1(19)	1999	30	49

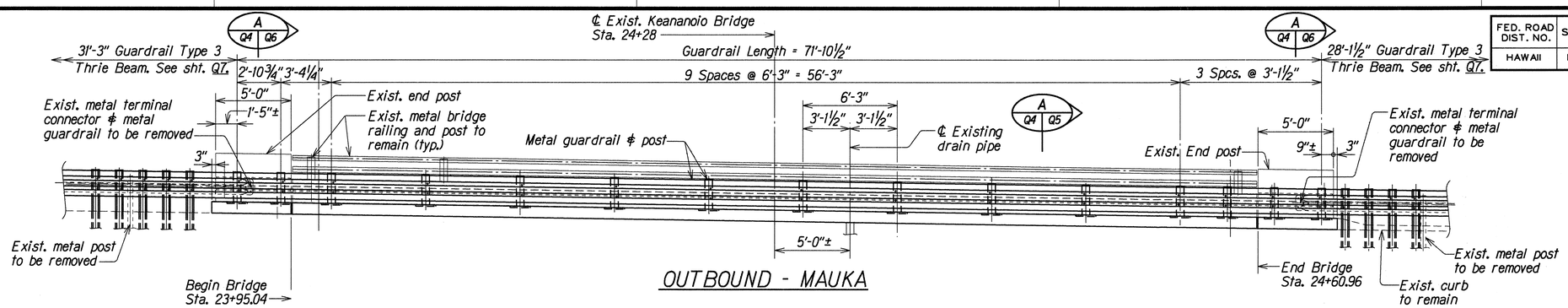

OUTBOUND - MAUKA

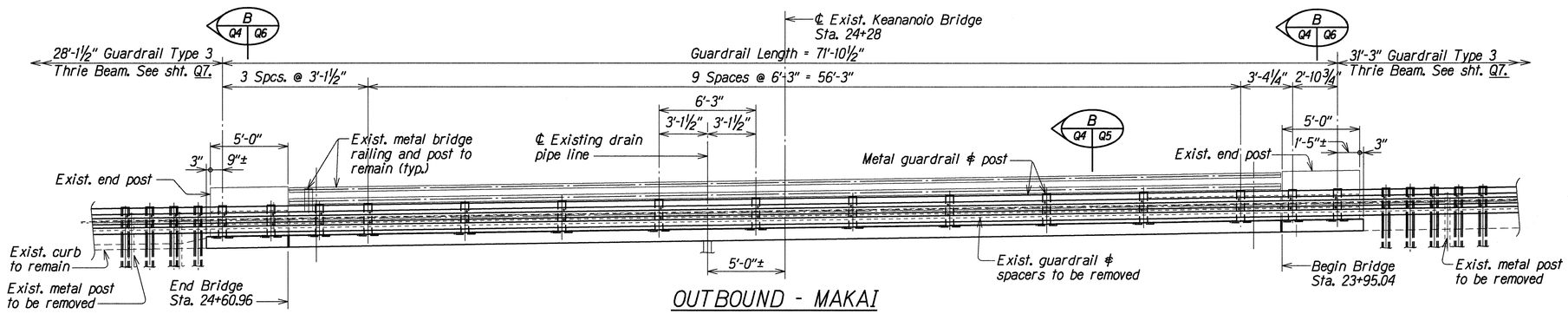

OUTBOUND - MAKAI

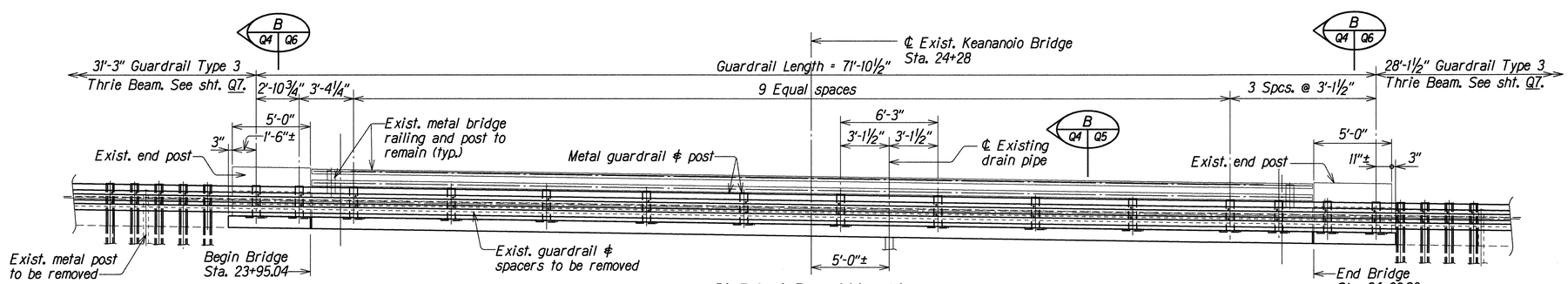

INBOUND - MAUKA

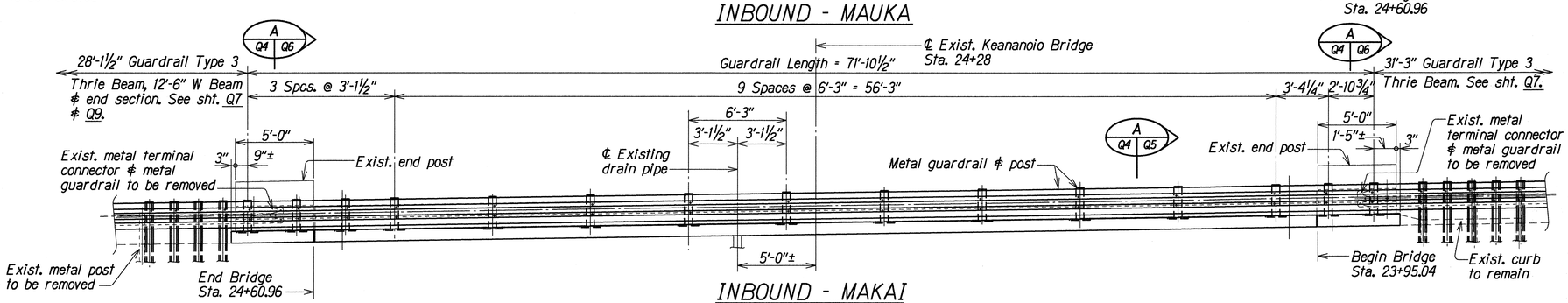

INBOUND - MAKAI

ELEVATIONS

Scale: ¼" = 1'-0"

ORIGINAL PLAN	SURVEY PLOTTED BY	DATE
	DRAWN BY LMA	OCT 1998
	TRACED BY DKY	OCT 1998
NOTE BOOK	DESIGNED BY DKY	OCT 1998
No.	QUANTITIES BY DCO	OCT 1998
	CHECKED BY	

STATE OF HAWAII
DEPARTMENT OF TRANSPORTATION
HIGHWAYS DIVISION

KEANANOIO STREAM BRIDGE
ELEVATIONS

FARRINGTON HIGHWAY IMPROVEMENTS
VICINITY OF TRACKS BEACH PARK
F.A.P. Project No. NH-093-1(19)

Scale: As Noted — Date: Mar. 1999

SHEET No. Q4 OF 9 SHEETS

FED. ROAD DIST. NO.	STATE	FED. AID PROJ. NO.	FISCAL YEAR	SHEET NO.	TOTAL SHEETS
HAWAII	HAW.	NH-093-1(19)	1999	31	49

NOTES:

1. Existing aluminum pipe rail and post to remain.
2. Removal and disposal of exist. W-beam and appurtenances to be considered incidental to Item 606.3111.
3. Existing bolt holes in concrete rail to be filled with non-shrink epoxy grout flush to rail face.
4. Verify curb height prior to fabrication of new rail posts.

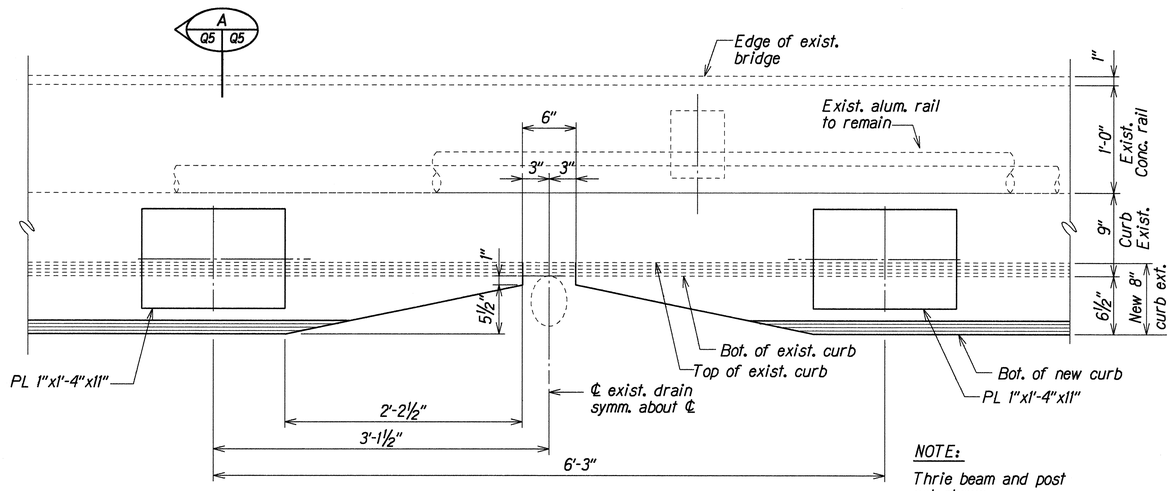

NOTE:

Thrie beam and post not shown

PARTIAL PLAN AT DRAIN

Scale: 1½"=1'-0"

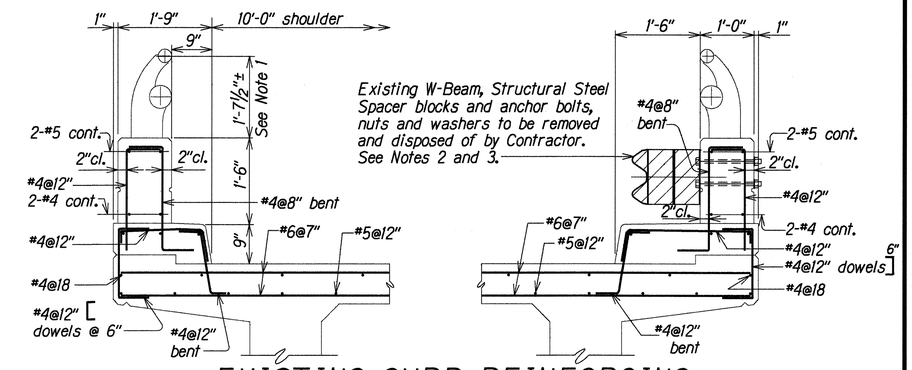

EXISTING CURB REINFORCING

Scale : ¾" = 1'-0"

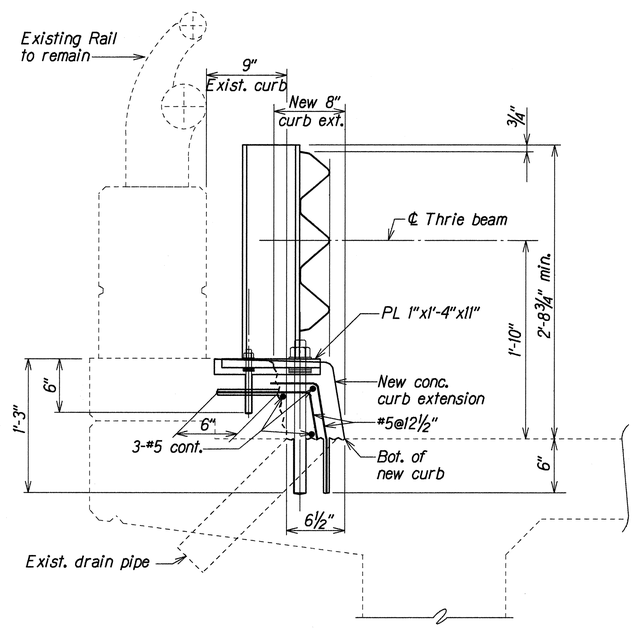

SECTION AT CURB EXTENSION

A Q4 Q5

Q5

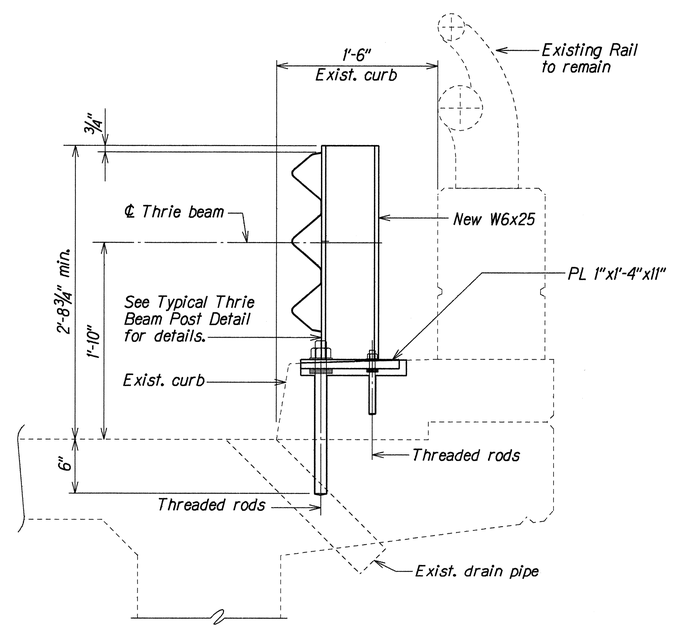

SECTION AT EXISTING CURB

B Q4 Q6

SECTIONS AT BRIDGE RAILING

Scale: 1½"=1'-0"

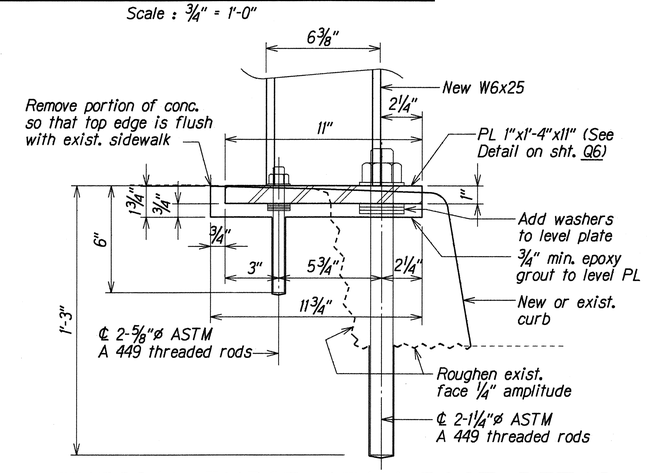

TYPICAL THRIE BEAM POST DETAIL

Scale: 3"=1'-0"

ORIGINAL PLAN	SURVEY PLOTTED BY		DATE
	DRAWN BY	TKM	OCT 1998
	TRACED BY		
NOTE BOOK	DESIGNED BY	DKT	OCT 1998
	QUANTITIES BY	DKT	OCT 1998
No.	CHECKED BY	XXX	OCT 1998

STATE OF HAWAII
DEPARTMENT OF TRANSPORTATION
HIGHWAYS DIVISION

KEANANOIO STREAM BRIDGE

PART. PLAN AT DRAIN; EXIST. CURB REINFORCING
SECTIONS AT CURB & TYP. THRIE BEAM POST DETAIL

FARRINGTON HIGHWAY IMPROVEMENTS
VICINITY OF TRACKS BEACH PARK
F.A.P. Project No. NH-093-1(19)

Scale: As Noted — Date: Mar. 1999

SHEET No. Q5 OF 9 SHEETS

FED. ROAD DIST. NO.	STATE	FED. AID PROJ. NO.	FISCAL YEAR	SHEET NO.	TOTAL SHEETS
HAWAII	HAW.	NH-093-1(19)	1999	32	49

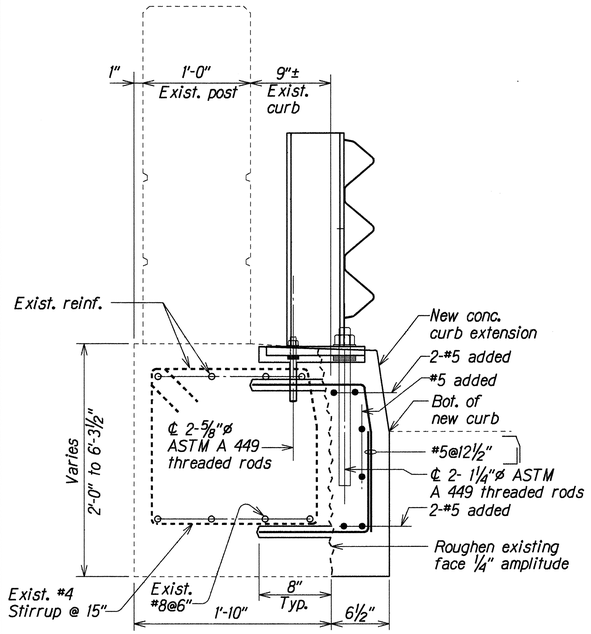

SECTION AT CURB EXTENSION (A Q4 Q6)

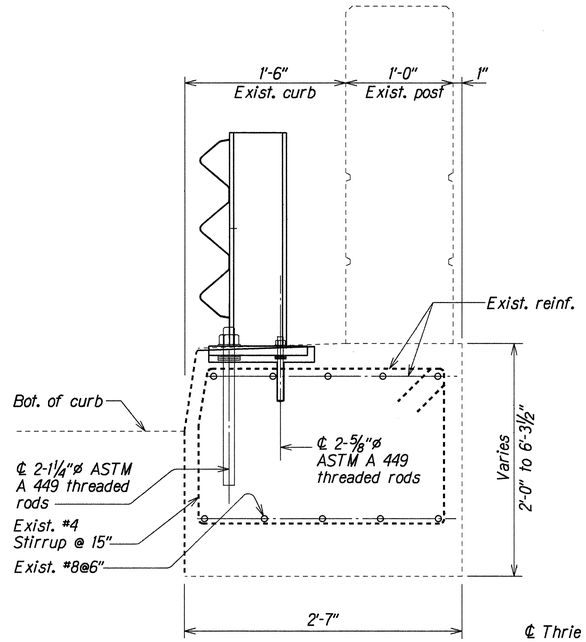

SECTION AT EXISTING CURB (B Q4 Q6)

SECTIONS AT EXISTING END POST

Scale: 1½"=1'-0"

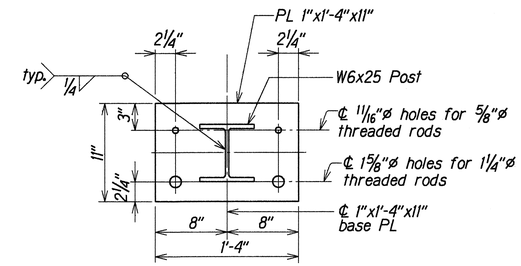

PLAN

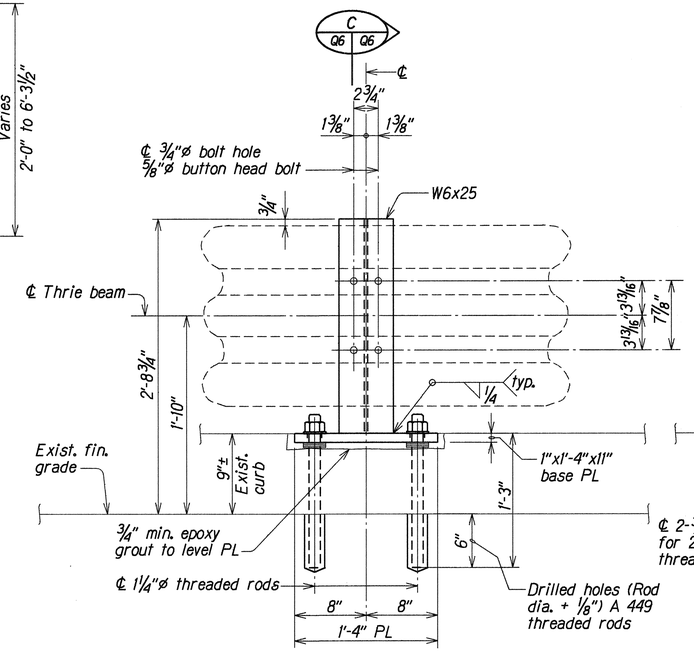

ELEVATION

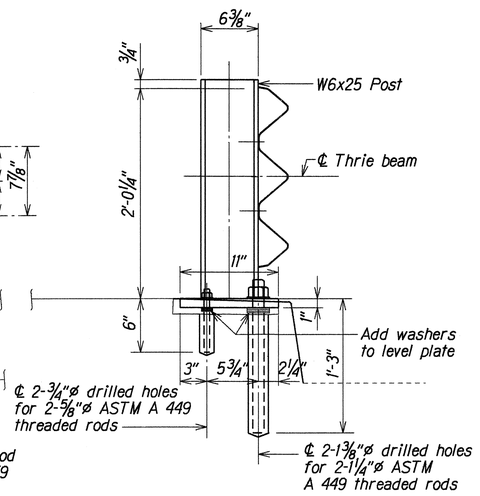

SECTION (C Q6 Q6)

BASE PL DETAIL

Scale: 1½"=1'-0"

ORIGINAL PLAN	SURVEY PLOTTED BY	XXX	DATE
	DRAWN BY	XXX	XXX 1999
	TRACED BY	XXX	XXX 1999
NOTE BOOK	DESIGNED BY	XXX	XXX 1999
N. Clarkson	QUANTITIES BY	XXX	XXX 1999
	CHECKED BY	XXX	XXX 1999

STATE OF HAWAII
DEPARTMENT OF TRANSPORTATION
HIGHWAYS DIVISION

KEANANOIO STREAM BRIDGE
SECTIONS AT EXISTING END POST
BASE PL DETAIL

FARRINGTON HIGHWAY IMPROVEMENTS
VICINITY OF TRACKS BEACH PARK
F.A.P. Project No. NH-093-1(19)

Scale: As Noted — Date: Mar. 1999

SHEET No. Q6 OF 9 SHEETS

FED. ROAD DIST. NO.	STATE	FED. AID PROJ. NO.	FISCAL YEAR	SHEET NO.	TOTAL SHEETS
HAWAII	HAW.	NH-093-1(19)	1999	33	49

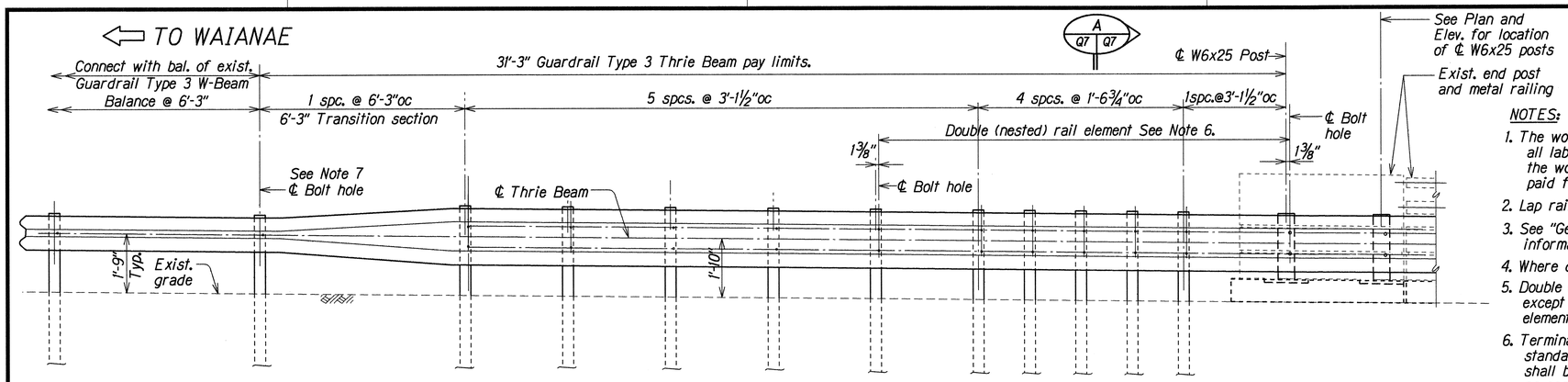

TYPICAL TYPE 3 THRIE BEAM METAL GUARDRAIL UPGRADE (WAIANAE END)

Scale: ½"=1'-0"

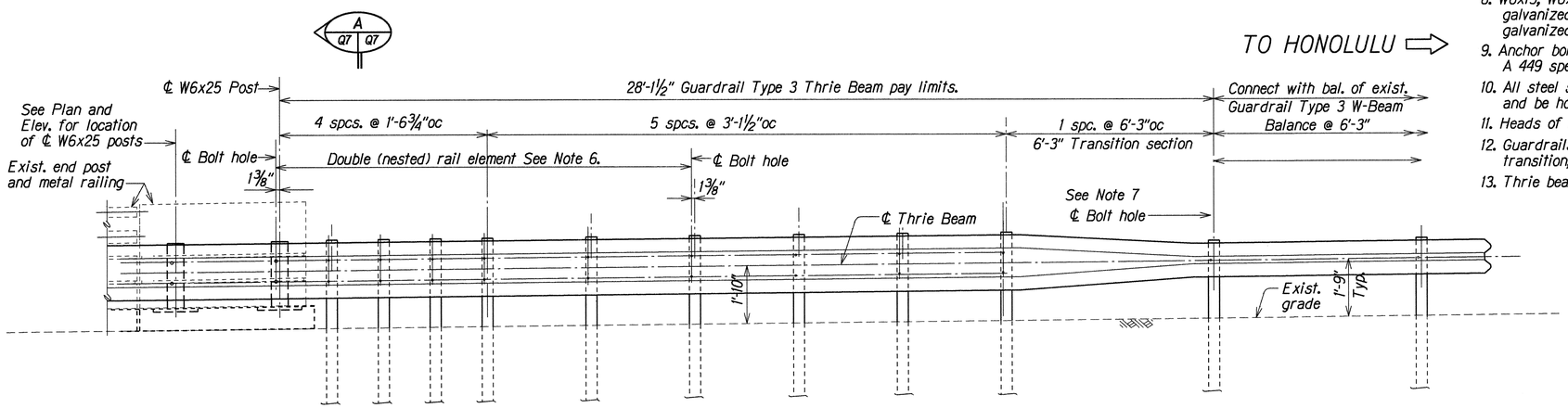

TYPICAL TYPE 3 THRIE BEAM METAL GUARDRAIL UPGRADE (HONOLULU END)

Scale: ½"=1'-0"

NOTES:

1. The work necessary to connect guardrail to concrete end post shall include all labor materials, tools, equipment and incidentals necessary to complete the work and shall be incidental to the metal guardrail and will not be paid for separately.
2. Lap rail elements in direction of traffic to prevent snagging.
3. See "General Notes" on Sht. #Q1 for additional guardrail and drilling information.
4. Where double (nested) beam occur, 12" "Back-up Plate" not required.
5. Double (nest 1st panel) thrie beam elements at all end post connections, except on highways with one-way traffic pattern, use single thrie beam elements at end post on trailing end only.
6. Terminal connector, W6x12 spacer, W6x15 rail post on base pLate and standard spacer including all anchor bolts, cap plates, nuts and washers shall be hot-dip galvanized after fabrication. (Clip washers shall be used as required).
7. Field drilled holes in existing metal railing to match location of metal spacer bolt holes at added W6x15 posts.
8. W6x15, W6x12 spacer and W6x25 rail post on base plate shall be hot-dip galvanized after fabrication. All bolts, nuts and washers shall be hot-dip galvanized.
9. Anchor bolts, which are threaded rods (studs), shall conform to ASTM A 449 specifications and be hot-dip galvanized after fabrication.
10. All steel shapes and plates shall conform to ASTM A 36 specifications and be hot-dip galvanized after fabrication.
11. Heads of through anchor bolts shall be placed on the traffic side of the rail.
12. Guardrails, single thrie beam on bridge and all rail elements in the 25' transition, shall be Class B (10 gage), Type II of AASHTO specification M 180.
13. Thrie beam expansion to be used where rail crosses bridge expansion joint.

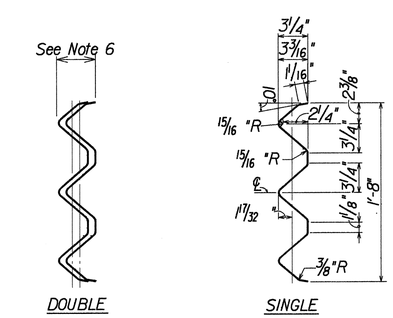

SECTION THRU RAIL ELEMENT

Scale: 1½" = 1'-0"

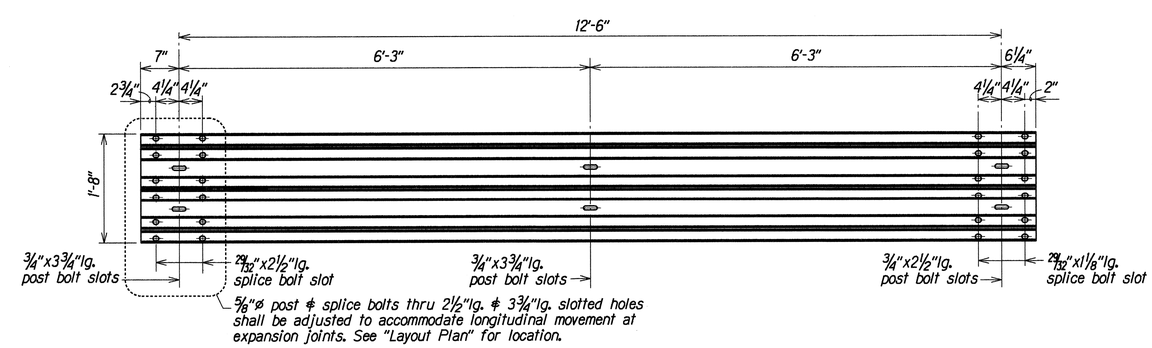

THRIE BEAM EXPANSION SECTION

Scale: 1" = 1'-0"

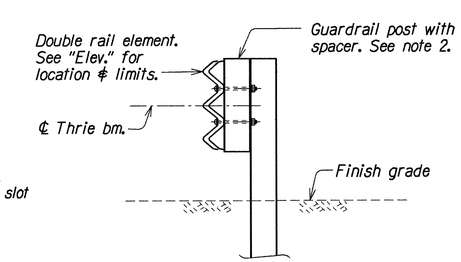

SECTION A Q7 Q7

Scale: ¾"=1'-0"

ORIGINAL PLAN	SURVEY PLOTTED BY		DATE
	DRAWN BY	MA, KSG	OCT 1998
	NOTE BOOK	TRACED BY	DKT OCT 1998
		DESIGNED BY	DKT OCT 1998
	No.	QUANTITIES BY	DKT OCT 1998
		CHECKED BY	DCO OCT 1998

STATE OF HAWAII
DEPARTMENT OF TRANSPORTATION
HIGHWAYS DIVISION

KEANANOIO STREAM BRIDGE
THRIE BEAM TRANSITION DETAILS
FARRINGTON HIGHWAY IMPROVEMENTS
VICINITY OF TRACKS BEACH PARK
F.A.P. Project No. NH-093-1(19)

Scale: As Noted — Date: Mar. 1999

SHEET No. Q7 OF 9 SHEETS

FED. ROAD DIST. NO.	STATE	FED. AID PROJ. NO.	FISCAL YEAR	SHEET NO.	TOTAL SHEETS
HAWAII	HAW.	NH-093-1(19)	1999	34	49

NOTES:

1. Bolt length varies and shall be verified in the field. Dimensions are approximate.

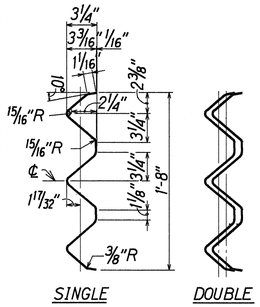

SECTION THRU RAIL ELEMENT
Scale: 1½" = 1'-0"

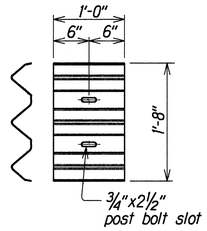

BACKUP PLATE
Scale: 1" = 1'-0"

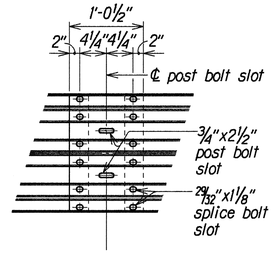

RAIL SPLICE
Scale: 1" = 1'-0"

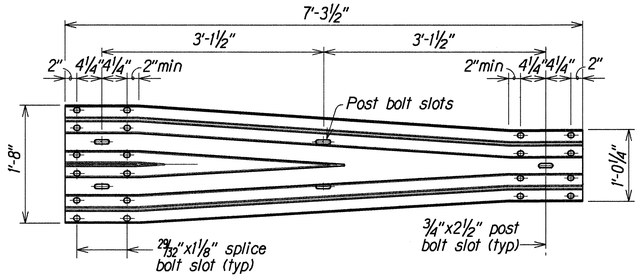

TRANSITION SECTION
Scale: 1" = 1'-0"

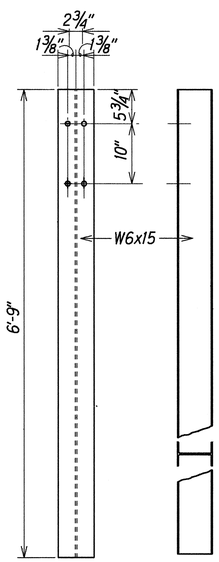

POST DETAILS
Scale: 1" = 1'-0"

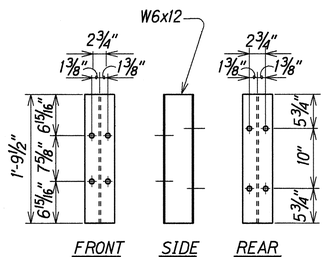

SPACER BLOCK DETAILS
Scale: 1" = 1'-0"

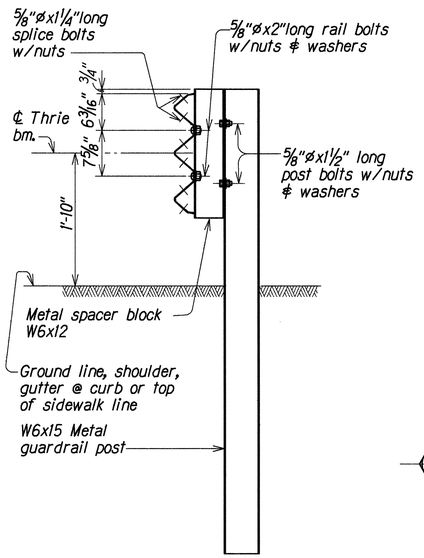

TYPICAL SECTION
METAL GUARDRAIL ON METAL POST WITH METAL SPACER BLOCK
Scale: 1" = 1'-0"

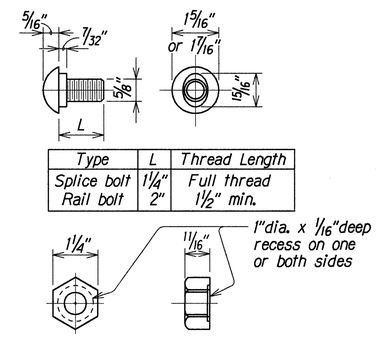

Type	L	Thread Length
Splice bolt	1¼"	Full thread
Rail bolt	2"	1½" min.

⅝"ø BUTTON HEAD BOLT & RECESS NUT
Scale: 6" = 1'-0"

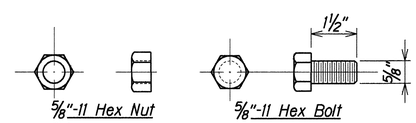

⅝"ø HEX POST BOLT & NUT
Scale: 6" = 1'-0"

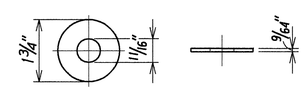

STEEL WASHER FOR ⅝"ø BOLT
Scale: 6" = 1'-0"

METAL GUARDRAIL TYPE 3 THRIE BEAM AND APPURTENANCES DETAILS

ORIGINAL PLAN	SURVEY PLOTTED BY KSG, LMA	DATE OCT 1998
NOTE BOOK	DRAWN BY	
	TRACED BY DKT	OCT 1998
	DESIGNED BY DKT	OCT 1998
	QUANTITIES BY KOO	OCT 1998
No.	CHECKED BY	

STATE OF HAWAII
DEPARTMENT OF TRANSPORTATION
HIGHWAYS DIVISION

KEANAOIO STREAM BRIDGE
METAL GUARDRAIL TYPE 3 THRIE BEAM AND APPURTENANCES DETAILS
FARRINGTON HIGHWAY IMPROVEMENTS
VICINITY OF TRACKS BEACH PARK
F.A.P. Project No. NH-093-1(19)

Scale: As Noted — Date: Mar. 1999

SHEET No. 08 OF 9 SHEETS

FED. ROAD DIST. NO.	STATE	FED. AID PROJ. NO.	FISCAL YEAR	SHEET NO.	TOTAL SHEETS
HAWAII	HAW.	NH-093-1(19)	1999	35	49

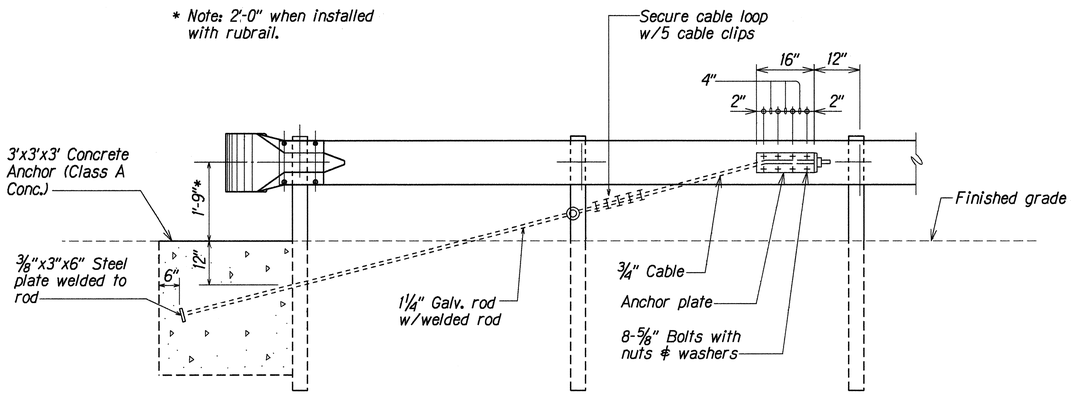

ANCHOR BLOCK DETAIL

1. Concrete, G.R.P., excavation, anchor rod and miscellaneous appurtenances necessary to anchor the guardrail ends shall be incidental to metal guardrail.

NOTE:

Type "G" Modified End Terminal is a site specific end terminal with a a taper and radial termini. A site specific detailed drawing is required for all Type "G" Modified End Terminal and must receive Engineer's approval.

The taper (flare rate) of the guardrail shall follow the latest edition of AASHTO's Roadside Design Guide (currently, Table 5.6 - Suggested Flare Rate for Barrier Design, page 5-21, Jan. 1996 edition).

The radius of the radial termini is an Engineer's judgement based on the site evaluation. The Engineer shall consider safety (minimize the spearing & blunt end situation); degree and potential seriousness of the hazard; bicycle and pedestrian accessibility; maintenance equuipment accessibility; Right-of-Way availability; the smallest radii the metal w-beam/thrie-beam railing can be impact; and aesthetics when designing the Type "G" Modified End Terminal.

During construction, the Contractor shall layout the proposed Type "G" Modified End Terminal and receive approval from the Construction Engineer prior to installation.

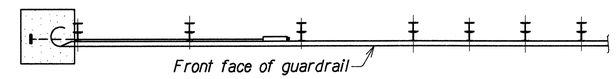

PLAN

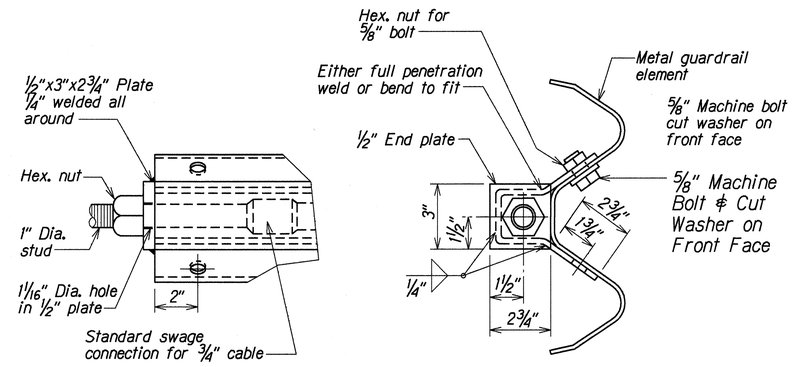

ANCHOR PLATE DETAILS

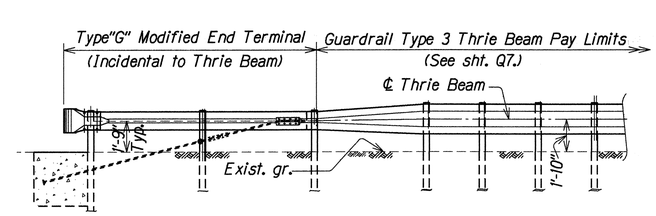

ELEVATION

TYPE "G" MODIFIED END TERMINAL

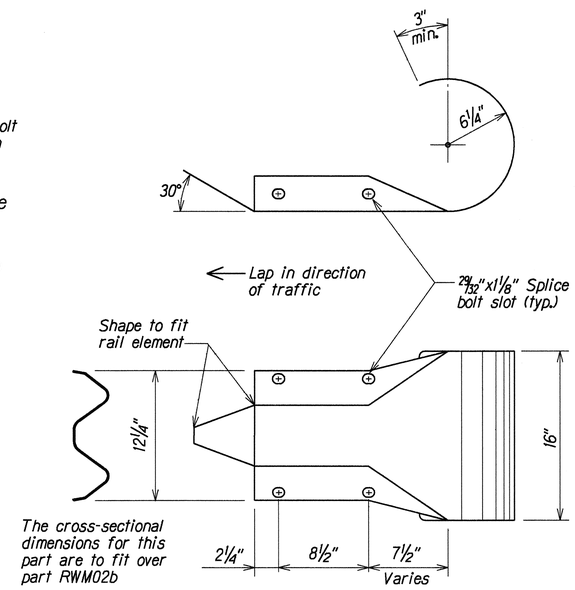

DESIGNATOR	BASE METAL THICKNESS
RWE03a	7/64"

W-BEAM END SECTION (ROUNDED RWE03a)

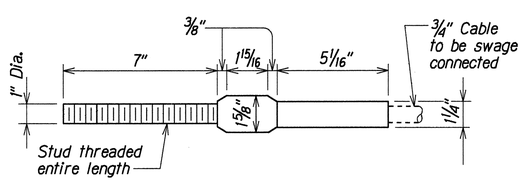

STANDARD SWAGED FITTING AND STUD

ORIGINAL PLAN	SURVEY PLOTTED BY XXX	DATE MAY 1999
	DRAWN BY XXX	MAY 1999
	TRACED BY XXX	MAY 1999
NOTE BOOK	DESIGNED BY XXX	MAY 1999
	QUANTITIES BY XXX	MAY 1999
No.	CHECKED BY XXX	MAY 1999

STATE OF HAWAII
DEPARTMENT OF TRANSPORTATION
HIGHWAYS DIVISION

KEANANOIO STREAM BRIDGE

GUARDRAIL DETAILS

FARRINGTON HIGHWAY IMPROVEMENTS
VICINITY OF TRACKS BEACH PARK
F.A.P. Project No. NH-093-1(19)

Scale: Not to Scale — Date: Mar. 1999

SHEET No. Q9 OF 9 SHEETS