FED. ROAD DIST. NO.	STATE	PROJ. NO.	FISCAL YEAR	SHEET NO.	TOTAL SHEETS
HAWAII	HAW.	93A-02-98M	1998	12S-1	27

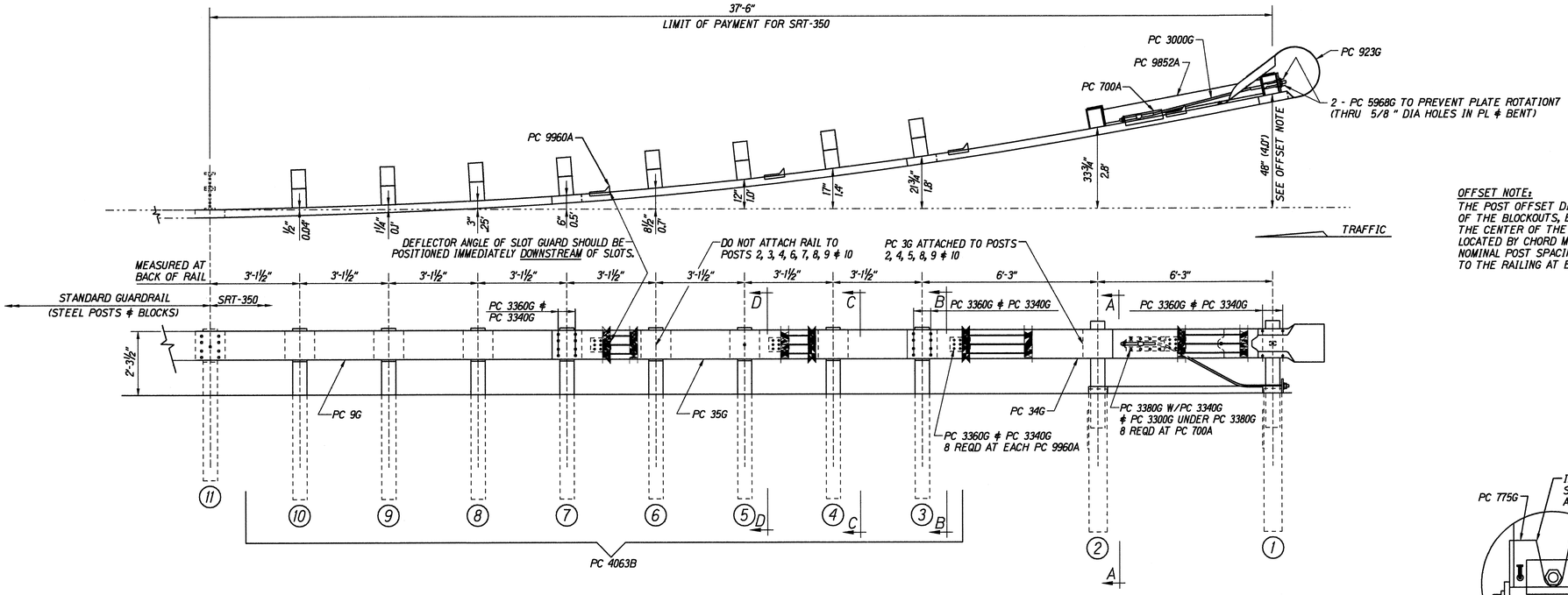

OFFSET NOTE:
THE POST OFFSET DIMENSIONS ARE GIVEN TO THE CENTER OF THE TRAFFIC FACE OF THE BLOCKOUTS, EXCEPT AT THE FIRST TWO POSTS, WHERE THE DIMENSION IS TO THE CENTER OF THE TRAFFIC FACE OF THE POST. OFFSET POINTS ARE TO BE LOCATED BY CHORD MEASUREMENTS AT THE BACK OF THE RAIL EQUAL TO THE NOMINAL POST SPACINGS SHOWN. POSTS ARE TO BE SET APPROXIMATELY RADIAL TO THE RAILING AT EACH POST LOCATION.

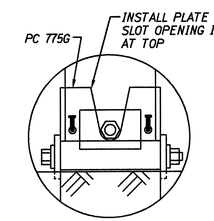

BEARING PLATE ORIENTATION

BILL OF MATERIAL

PC	QTY	DESCRIPTION
3G	7	12/12"/BACKUP (GUARDRAIL)
9G	1	12/12'6"/6'3/S (GUARDRAIL)
34G	1	12/12'6/S SRT-1 (GUARDRAIL)
35G	1	12/12'6/6'3/S SRT-2 (GUARDRAIL)
700A	1	CABLE ANCHOR BRACKET
705G	1	2"ø x 5½" PIPE
736G	2	5'0 TUBE SLEEVE
766G	2	¼x 18 x 24 SOIL PLATE
775G	1	⅝x 6 x 8 BEARING PLATE
923G	1	12/BARRIER/98" (TERMINAL)
3000G	1	¾x 6'6 CABLE
3300G	22	⅝" WASHER
3320G	1	3/16x 1¾x 3 WASHER
3340G	77	⅝" HEX NUT
3360G	53	⅝"ø x 1¼" SPLICE BOLT
3380G	8	⅝"ø x 1½" HEX HD BOLT
3478G	4	⅝"ø x 7½" HEX HD BOLT
3497G	2	⅝"ø x 9½" HEX HD BOLT
3500G	2	⅝"ø x 10" POST BOLT
3580G	8	⅝"ø x 18" POST BOLT
3900G	1	1" WASHER
3910G	2	1" HEX NUT
4063B	8	6'0 POST 6 x 8
4075B	8	14" BLOCK 6 x 8
4147B	2	3' 9 POST 5½x 7½
5968G	2	16d NAIL SRT
9852A	1	STRUT ASSEMBLY
9960A	4	SLOT GUARD
9961G	1	⅜x 3 x 4 PLATE WASHER

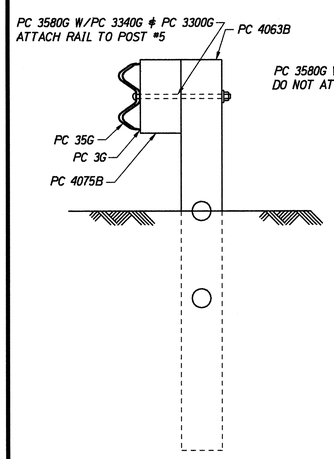

SECTION "D-D"
(@ POST #5)

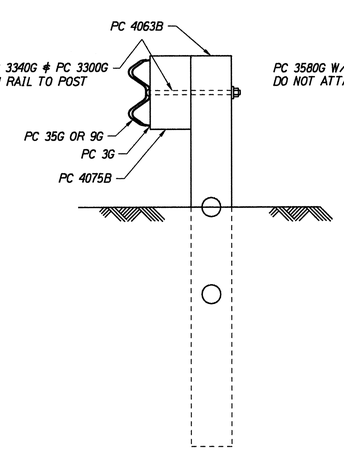

SECTION "C-C"
(@ POSTS #4, #6, #8, #9 & #10)

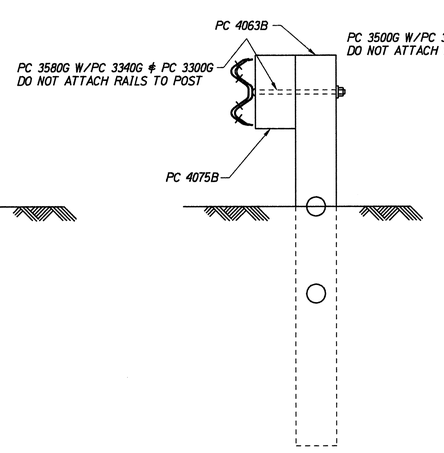

SECTION "B-B"
(@ POSTS #3 & #7)

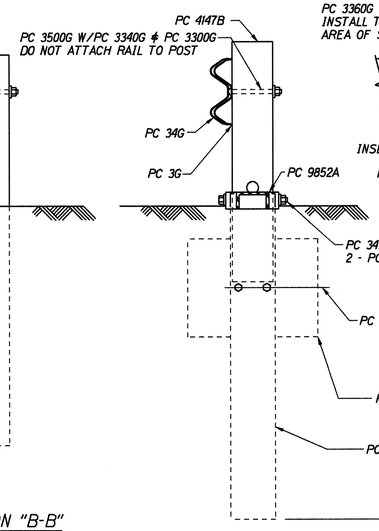

SECTION "A-A"
(@ POST #2)

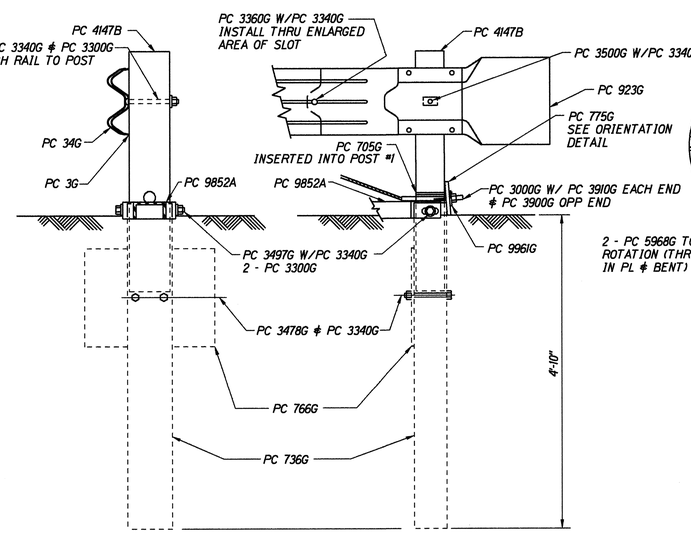

ENLARGED VIEW @ POST #1

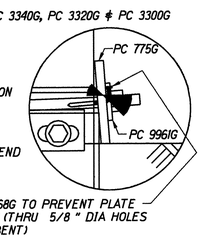

ORIGINAL PLAN	SURVEY PLOTTED BY	DATE 5/29/96
	DRAWN BY Traffic	
NOTE BOOK dd3/nne	TRACED BY	
	DESIGNED BY X	
No. srt350dgn	QUANTITIES BY	
	CHECKED BY	

STATE OF HAWAII
DEPARTMENT OF TRANSPORTATION
HIGHWAYS DIVISION

SRT-350
SLOTTED RAIL TERMINAL

FARRINGTON HIGHWAY RESURFACING
Piliokoe Bridge to Vicinity of Aliinui Drive
Project No. 93A-02-98

Not To Scale — Date: May 1998

SHEET No. 1 OF 1 SHEETS

12S-1

FED. ROAD DIST. NO.	STATE	PROJ. NO.	FISCAL YEAR	SHEET NO.	TOTAL SHEETS
HAWAII	HAW.	93A-02-98M	1998	12S-2	27

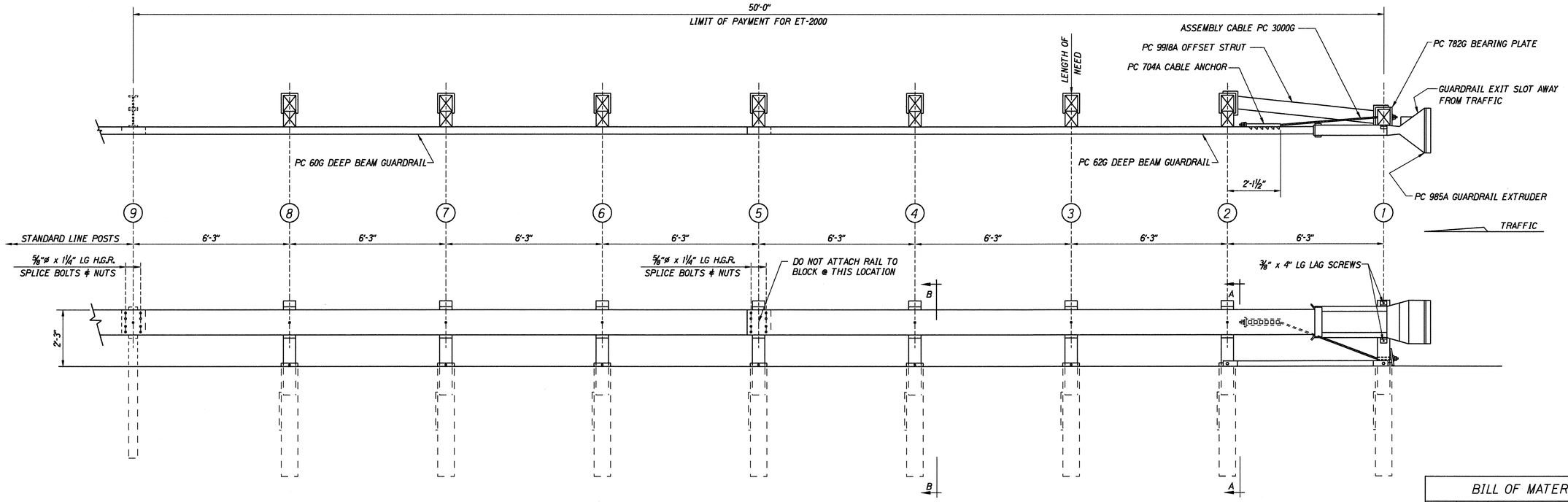

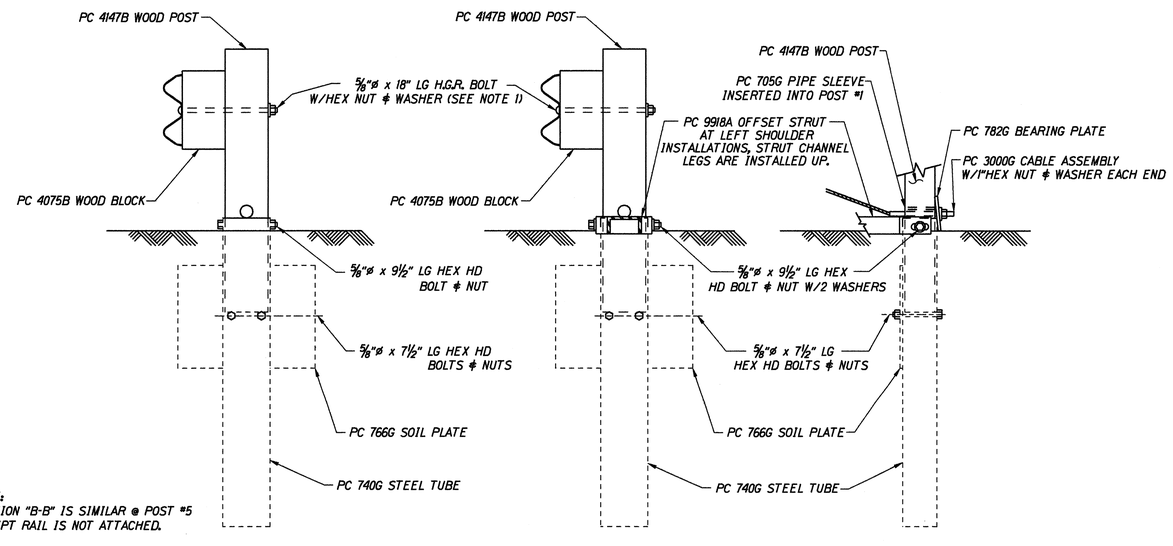

NOTE:
SECTION "B-B" IS SIMILAR @ POST #5 EXCEPT RAIL IS NOT ATTACHED.

SECTION "B-B"
(TYP @ POSTS #3, 4, 6, 7 & 8)

SECTION "A-A"
(@ POST #2)

PARTIAL VIEW @ POST #1

NOTE: THE ⅝" FLAT WASHER IS USED UNDER THE NUT, BEHIND THE POST ONLY. NO WASHER IS USED AT THE RAIL.

BILL OF MATERIAL

PC	QTY	DESCRIPTION
60G	1	12/25/6'3/S (GUARDRAIL)
62G	1	12/25/6'3/S ANC (GUARDRAIL)
704A	1	CABLE ANCHOR BRACKET
705G	1	2" x 5½" PIPE
740G	8	4'6 TUBE SLEEVE
766G	8	¼" x 18" x 24" SOIL PLATE
782G	1	⅝" x 8" x 8" BEARING PLATE
985A	1	ET-2000 EXTRUDER
3000G	1	CABLE ¾" x 6'6
3300G	11	⅝" WASHER
3340G	47	⅝" HEX NUT
3360G	16	⅝"ø x 1¼" SPLICE BOLT
3478G	16	⅝"ø x 7½" HEX HD BOLT
3497G	8	⅝"ø x 9½" HEX HD BOLT
3580G	7	⅝"ø x 18" POST BOLT
3900G	2	1" WASHER
3910G	2	1" HEX NUT
4075B	7	WD BLOCK 1'2 6" x 8" DR
4147B	8	WD 3'9 POST 5½ x 7½
4228G	2	⅜"ø x 4" LAG SCREW
9918A	1	6'3 STRUT

ORIGINAL PLAN	SURVEY PLOTTED BY	DATE 5/29/98
	DRAWN BY Heatlin	
	TRACED BY	
NOTE BOOK	DESIGNED BY L. Nakamoto	
d/13/yrne	QUANTITIES BY	
N. et/2000/dgn	CHECKED BY	

STATE OF HAWAII
DEPARTMENT OF TRANSPORTATION
HIGHWAYS DIVISION

ET-2000

FARRINGTON HIGHWAY RESURFACING
Piliokoe Bridge to Vicinity of Aliinui Drive
Project No. 93A-02-98

Not to Scale — Date: May 1998

SHEET No. 1 OF 1 SHEETS

12S-2