FED. ROAD DIST. NO.	STATE	PROJ. NO.	FISCAL YEAR	SHEET NO.	TOTAL SHEETS
HAWAII	HAW.	93B-02-91	1994	7	122

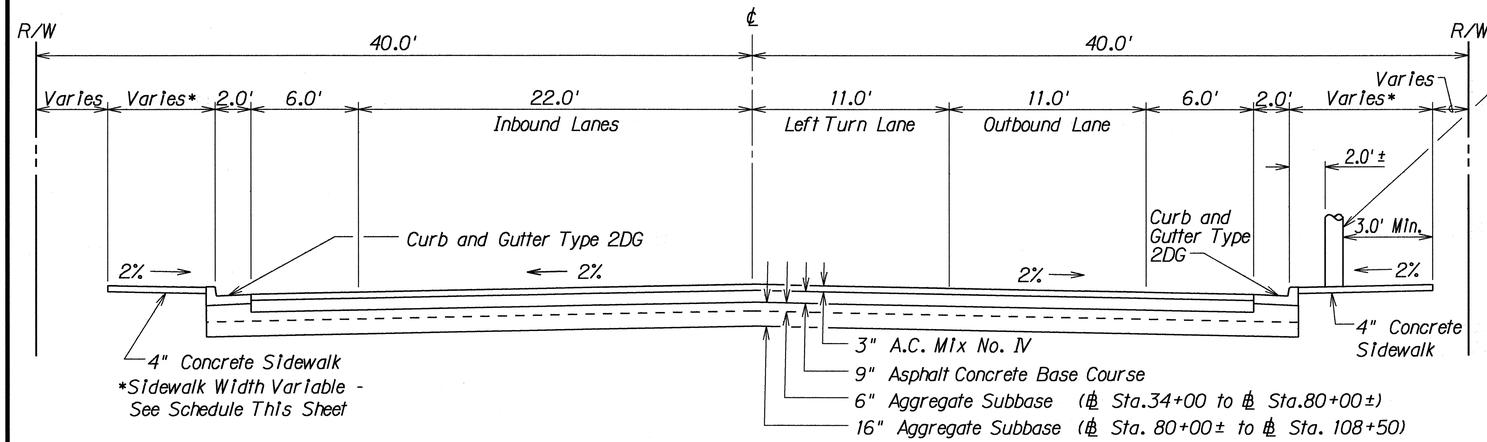

TYPICAL TANGENT SECTION

℄ Sta. 34+00 to ℄ Sta. 108+50

(Except as Noted Below)

Scale: 1/4" = 1'-0"

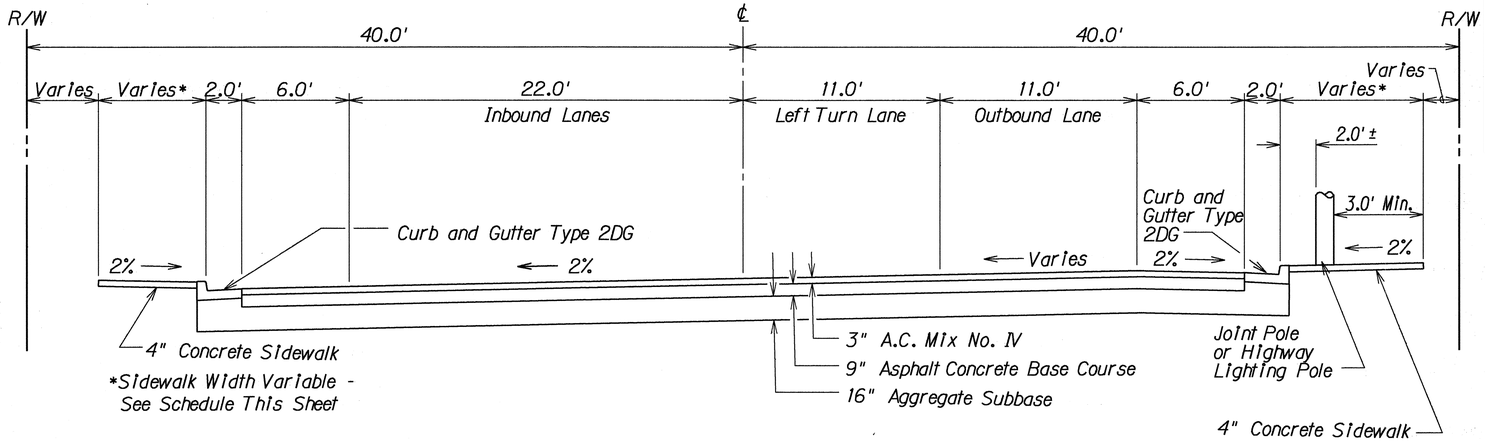

TYPICAL SECTION ON CURVE

℄ Sta. 82+25± to ℄ Sta. 90+75±

Scale: 1/4" = 1'-0"

SIDEWALK WIDTH SCHEDULE

STATION	WIDTH LEFT	STATION	WIDTH RIGHT
34+00		34+90	
	Variable		10'
36+62		54+05	
	8'		8'
57+18		57+18	
	Varies 8' to 10'		Varies 8' to 10'
57+70		57+70	
	8'		8'
65+15		66+05	
	Varies 8' to 10'		10'
66+35		66+40	
	10'		8'
77+75		68+47	
	Varies 8' to 10'		10'
78+45		68+83	
	10'		8'
80+01		80+75	
	6'		6'
93+94		86+09	
	Existing (10')		Varies 10' to 6'
95+05		88+08	
	6'		6'
107+07		93+00	
	Varies 6' to 10'		Varies 6' to 10'
107+27		93+20	
	10'		Existing (10')
107+52		95+14	
	Varies 10' to 6'		6'
107+75		97+77	
	6'		Varies 6' to 10'
108+50		97+97	
			Existing (10')
		99+72	
			Varies 10' to 6'
		101+34	
			6'
		105+87	
			10'
		108+03	

NOTES:

1. For Grade Adjustment Details at the Right-of-Way Line See Plan Sheet Nos. 28 - 41.
2. Sidewalk Width Schedule stations are approximate. The exact stationing is to be determined by the Engineer.
3. There shall be a minimum of 3' clearance at all sidewalk areas as required by the Commission on Persons with Disabilities. The Constractor shall be especially careful to meet this requirement at joint poles, highway lighting poles and other obstructions.
4. Pavement structure for A.C. driveways will be:
   2" A.C. Mix No. IV
   4" Aggregate Base

STATE OF HAWAII
DEPARTMENT OF TRANSPORTATION
HIGHWAYS DIVISION

TYP. SECTION, SIDEWALK WIDTH SCHEDULE & NOTES

FARRINGTON HIGHWAY WIDENING

Ala Hema Street towards Jade Street

Project No. 93B-02-91

Scale: 1/4" = 1'-0" Date: Jan., 1992

SHEET No. 1 OF 1 SHEETS

ORIGINAL PLAN | SURVEY PLOTTED BY | DRAWN BY G. Atiburcio | TRACED BY | DESIGNED BY R. Hironaka | QUANTITIES BY | CHECKED BY | DATE r4-5-94 | NOTE BOOK dd2.george lfardtsl.dgn No.

lfardtsl.dgn login: george r4-5-94