FED. ROAD DIST. NO.	STATE	PROJ. NO.	FISCAL YEAR	SHEET NO.	TOTAL SHEETS
HAWAII	HAW.	01-87A	2002	ADD. 268	268

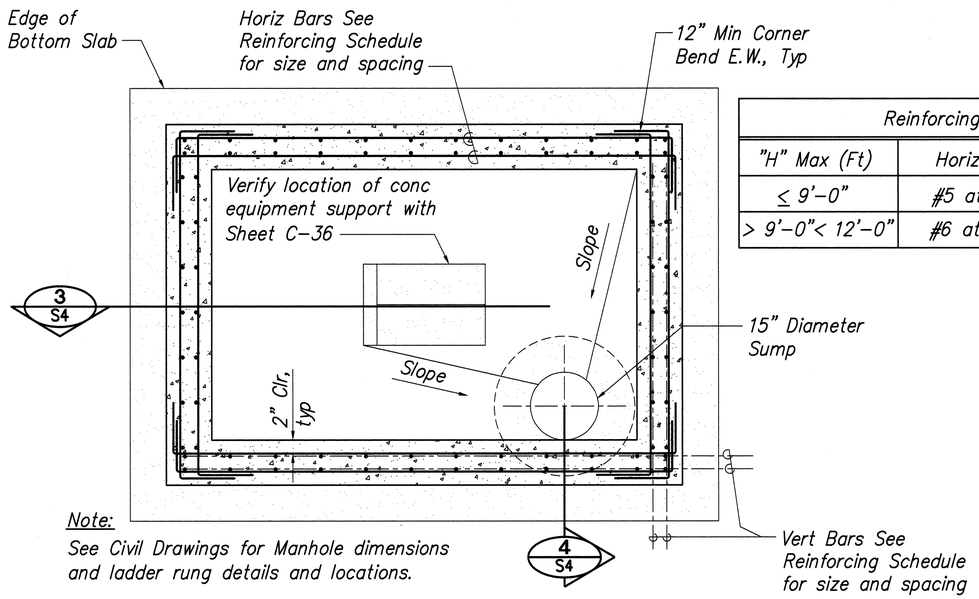

Note:
See Civil Drawings for Manhole dimensions and ladder rung details and locations.

Reinforcing Schedule		
"H" Max (Ft)	Horiz Bars	Vert Bars
≤ 9'-0"	#5 at 12"	#4 at 10"
> 9'-0"< 12'-0"	#6 at 10"	#7 at 10"

PLAN-WALL REINFORCEMENT (1 / S4)
Scale: 3/4" = 1'-0"

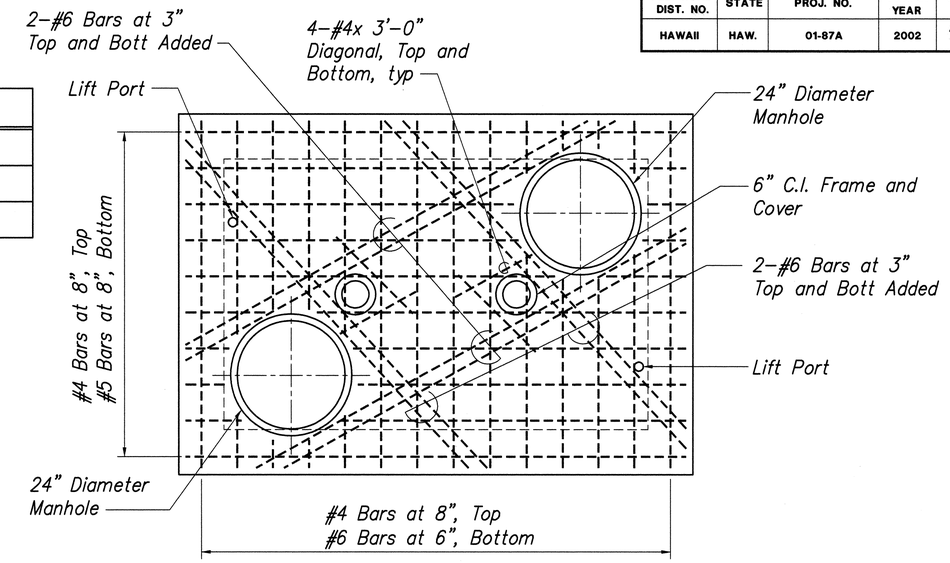

PLAN-TOP SLAB REINFORCEMENT (2 / S4)
Scale: 3/4" = 1'-0"

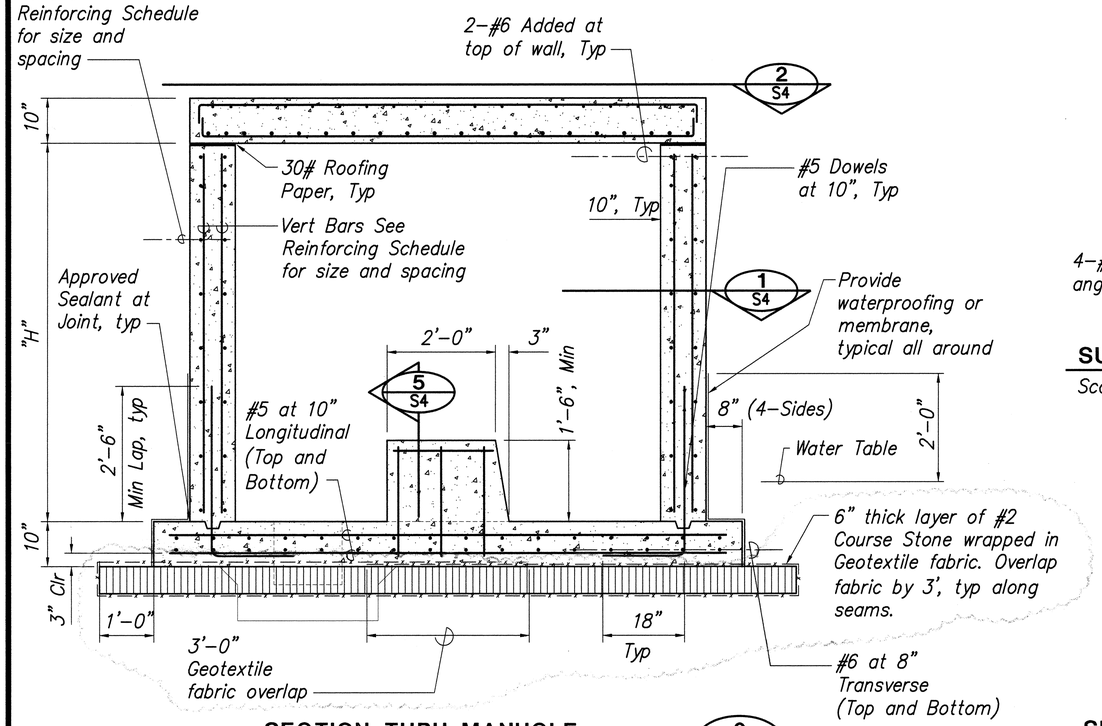

SECTION THRU MANHOLE (3 / S4)
Scale: 3/4" = 1'-0"

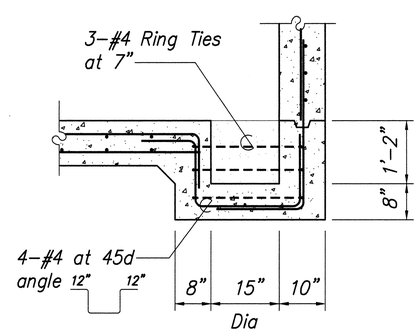

SUMP SECTION (4 / S4)
Scale: 3/4" = 1'-0"

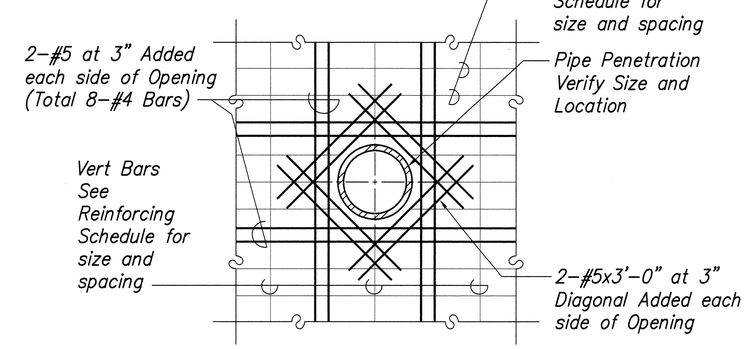

ELEVATION WALL PIPE PENETRATION REINF (6 / S4)
Scale: 3/4" = 1'-0"

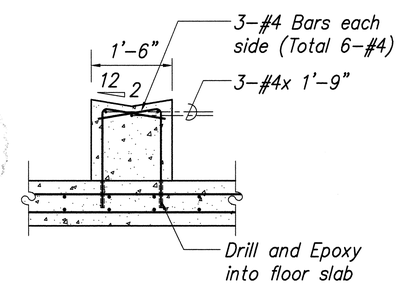

SECTION (5 / S4)
Scale: 3/4" = 1'-0"

ORIGINAL PLAN	SURVEY PLOTTED BY	DATE
	DRAWN BY	
NOTE BOOK	TRACED BY	
	DESIGNED BY	
	QUANTITIES BY	
No.	CHECKED BY	

KEN KAZUO HAYASHIDA LICENSED PROFESSIONAL ENGINEER No. 6818-S HAWAII, U.S.A.

THIS WORK WAS PREPARED BY ME OR UNDER MY SUPERVISION

DATE	REVISION
12/21/01	Added Stone Base

STATE OF HAWAII
DEPARTMENT OF TRANSPORTATION
HIGHWAYS DIVISION

MODIFIED TYPE "A"
MANHOLE DETAILS

NIMITZ HIGHWAY
WATER SYSTEM IMPROVEMENT, PART 1
BWS JOB NO. 01-87A

Scale: As Noted Date: 11/01/01

SHEET No. S4 OF 43 SHEETS

RMTC JOB NO1-18681-0E

ADD. 268