FED. ROAD DIST. NO.	STATE	FED. AID PROJ. NO.	FISCAL YEAR	SHEET NO.	TOTAL SHEETS
HAWAII	HAW.	NH-092-1(25)	2002	59	268

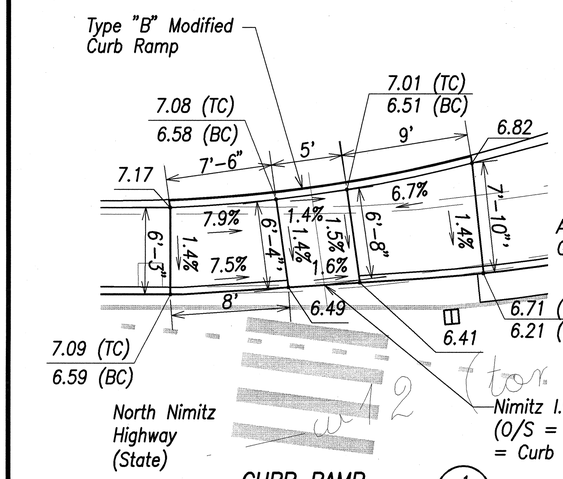

CURB RAMP (1) C-42 C-55
Scale: 1" = 5'-0"

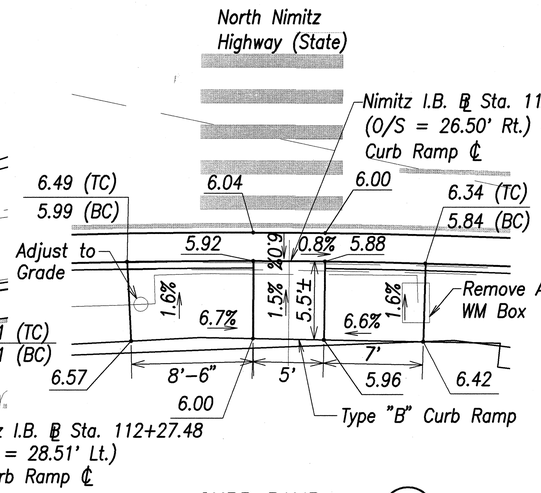

CURB RAMP (2) C-42 C-55
Scale: 1" = 5'-0"

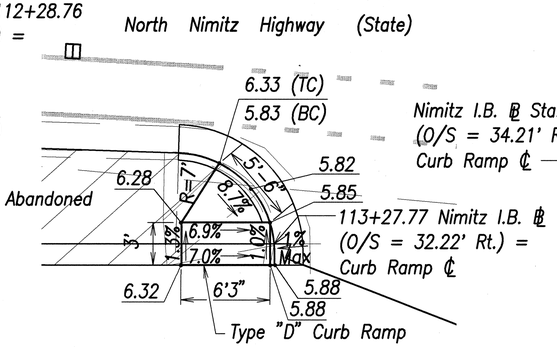

CURB RAMP (3) C-42 C-55
Scale: 1" = 5'-0"

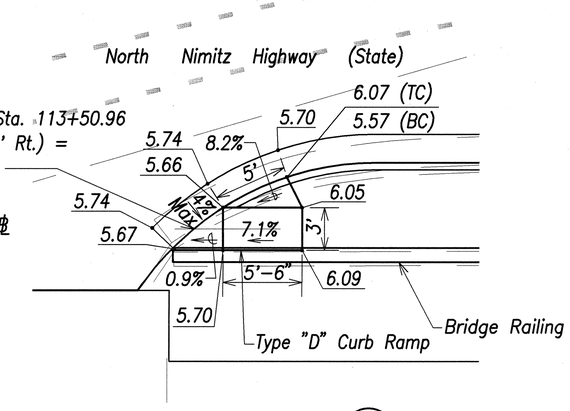

CURB RAMP (4) C-42 C-55
Scale: 1" = 5'-0"

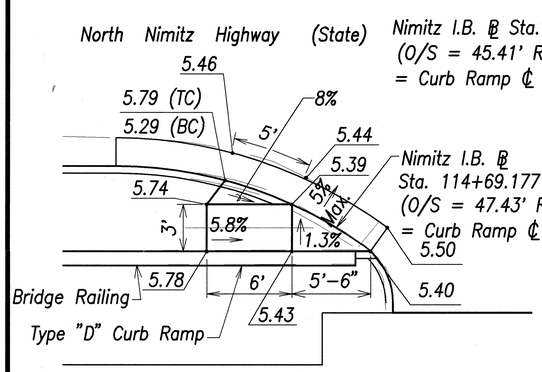

CURB RAMP (5) C-42 C-55
Scale: 1" = 5'-0"

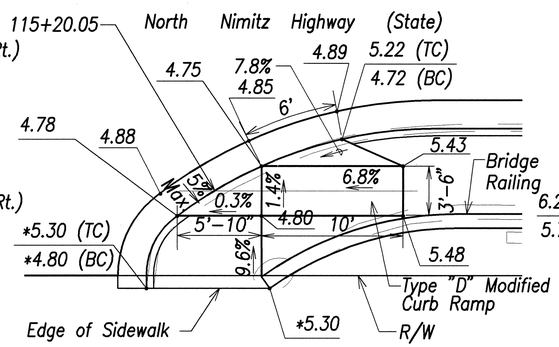

CURB RAMP (6) C-42 C-55
Scale: 1" = 5'-0"

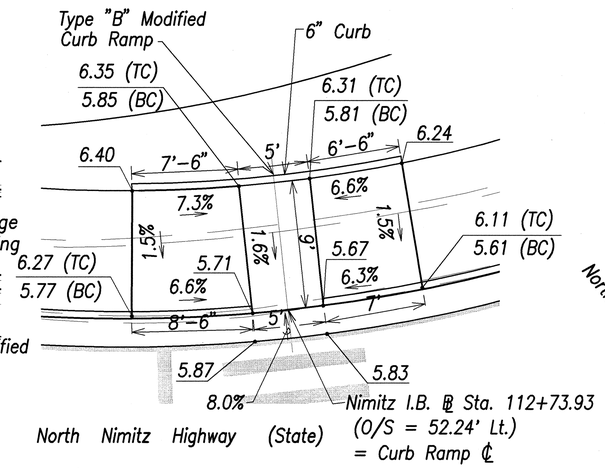

CURB RAMP (7) C-42 C-55
Scale: 1" = 5'-0"

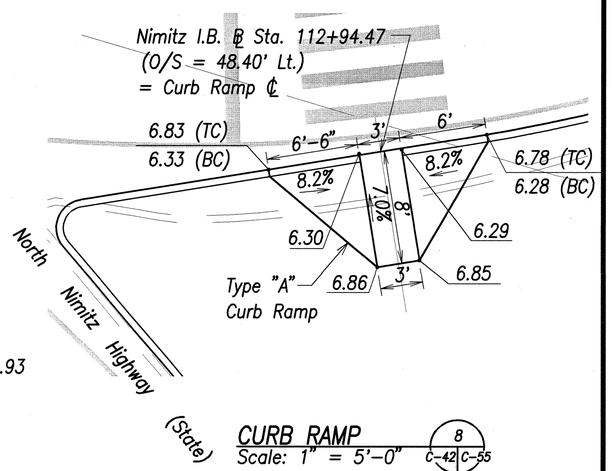

CURB RAMP (8) C-42 C-55
Scale: 1" = 5'-0"

LEGEND:

TC = Top of curb
BC = Bottom of curb

NOTE:

All grades shown are finished grades. The contractor shall verify in the field that the grades shown with an asterisk (*) are consistent with the existing grade at the indicated location and make necessary adjustments to make a smooth connection between new and existing surfaces. All adjusted surfaces shall be in full compliance with the accessibility requirements.

ORIGINAL PLAN	SURVEY PLOTTED BY	DATE
	DRAWN BY	
	TRACED BY	
NOTE BOOK	DESIGNED BY	
	QUANTITIES BY	
No.	CHECKED BY	

GREG H. HIYAKUMOTO
LICENSED PROFESSIONAL ENGINEER
No. 6662-C
HAWAII, U.S.A.

THIS WORK WAS PREPARED BY ME OR UNDER MY SUPERVISION

SIGNATURE 10/19/01 DATE

STATE OF HAWAII
DEPARTMENT OF TRANSPORTATION
HIGHWAYS DIVISION

CURB RAMP GRADING PLAN-1

NIMITZ HIGHWAY REHABILITATION
SUMNER STREET TO QUEEN STREET
F.A.I. Proj. No. NH-092-1(25)

Scale: As shown Date: 10/19/01

SHEET No. C-55 OF 107 SHEETS

(SF) CR-plan1.dwg.DWG
September 16, 2000 12:05PM
RMTC JOB NO.: 1-18681-0E

FED. ROAD DIST. NO.	STATE	FED. AID PROJ. NO.	FISCAL YEAR	SHEET NO.	TOTAL SHEETS
HAWAII	HAW.	NH-092-1(25)	2002	60	268

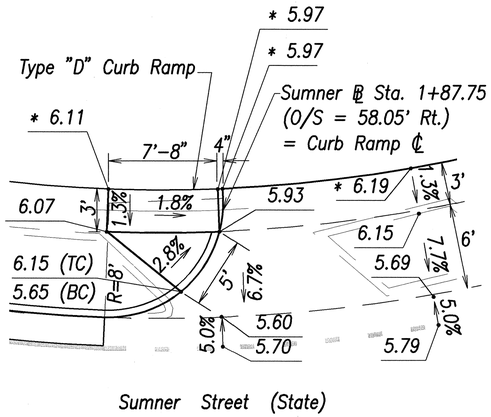

CURB RAMP (9) C-42 C-56
Scale: 1" = 5'-0"

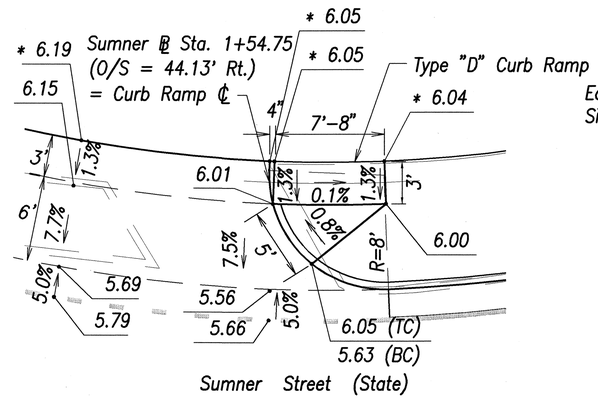

CURB RAMP (10) C-42 C-56
Scale: 1" = 5'-0"

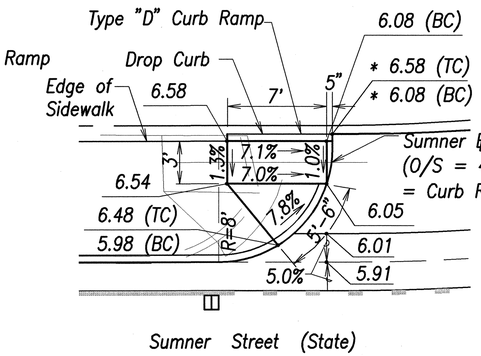

CURB RAMP (11) C-42 C-56
Scale: 1" = 5'-0"

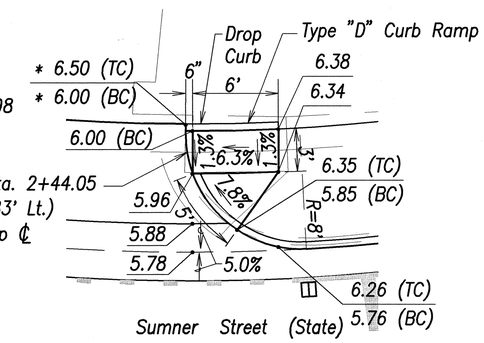

CURB RAMP (12) C-42 C-56
Scale: 1" = 5'-0"

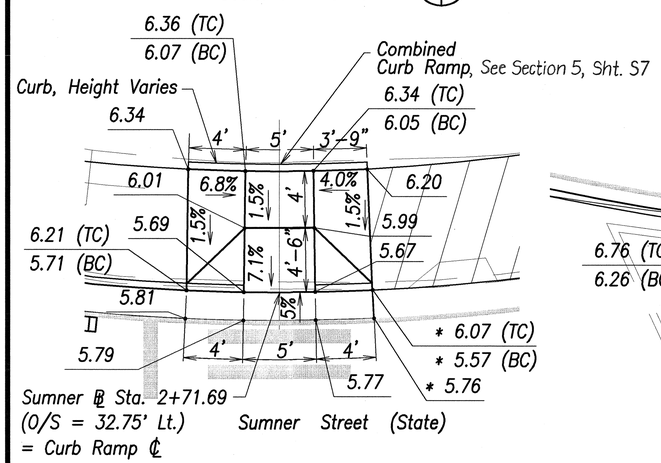

CURB RAMP (13) C-42 C-56
Scale: 1" = 5'-0"

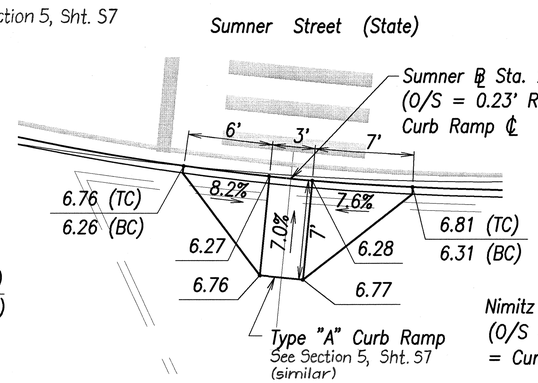

CURB RAMP (14) C-42 C-56
Scale: 1" = 5'-0"

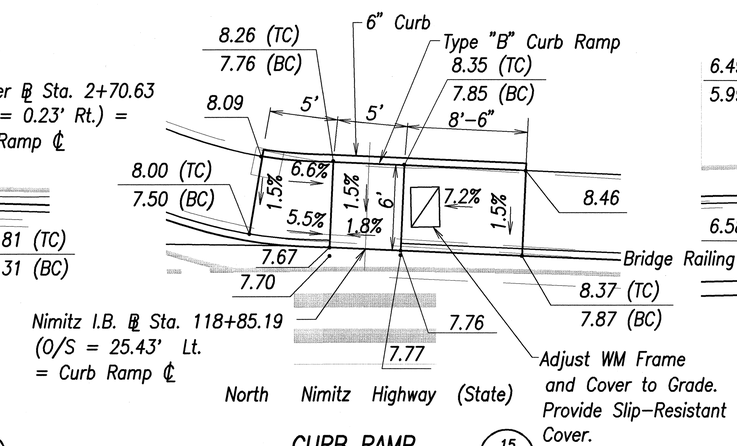

CURB RAMP (15) C-43 C-56
Scale: 1" = 5'-0"

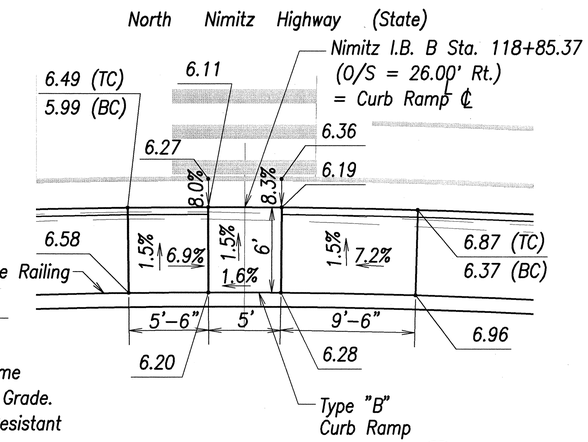

CURB RAMP (16) C-43 C-56
Scale: 1" = 5'-0"

LEGEND:
TC = Top of curb
BC = Bottom of curb

NOTE:
All grades shown are finished grades. The contractor shall verify in the field that the grades shown with an asterisk (*) are consistent with the existing grade at the indicated location and make necessary adjustments to make a smooth connection between new and existing surfaces. All adjusted surfaces shall be in full compliance with the accessibility requirements.

ORIGINAL PLAN
SURVEY PLOTTED BY
SURVEY CHECKED BY
TRACED BY
NOTE BOOK
DESIGNED BY
No.
QUANTITIES BY
CHECKED BY
DATE

GREG H. HIYAKUMOTO
LICENSED PROFESSIONAL ENGINEER
No. 6662-C
HAWAII, U.S.A.

THIS WORK WAS PREPARED BY ME OR UNDER MY SUPERVISION

SIGNATURE DATE

STATE OF HAWAII
DEPARTMENT OF TRANSPORTATION
HIGHWAYS DIVISION

CURB RAMP GRADING PLAN-2

NIMITZ HIGHWAY REHABILITATION
SUMNER STREET TO QUEEN STREET
F.A.I. Proj. No. NH-092-1(25)

Scale: As shown Date: 10/19/01

SHEET No. C-56 OF 107 SHEETS

(SF) CR-plan2.dwg,DWG RMTC JOB NO.: 1-18681-0E
September 16, 2000 10:53AM

FED. ROAD DIST. NO.	STATE	FED. AID PROJ. NO.	FISCAL YEAR	SHEET NO.	TOTAL SHEETS
HAWAII	HAW.	NH-092-1(25)	2002	61	268

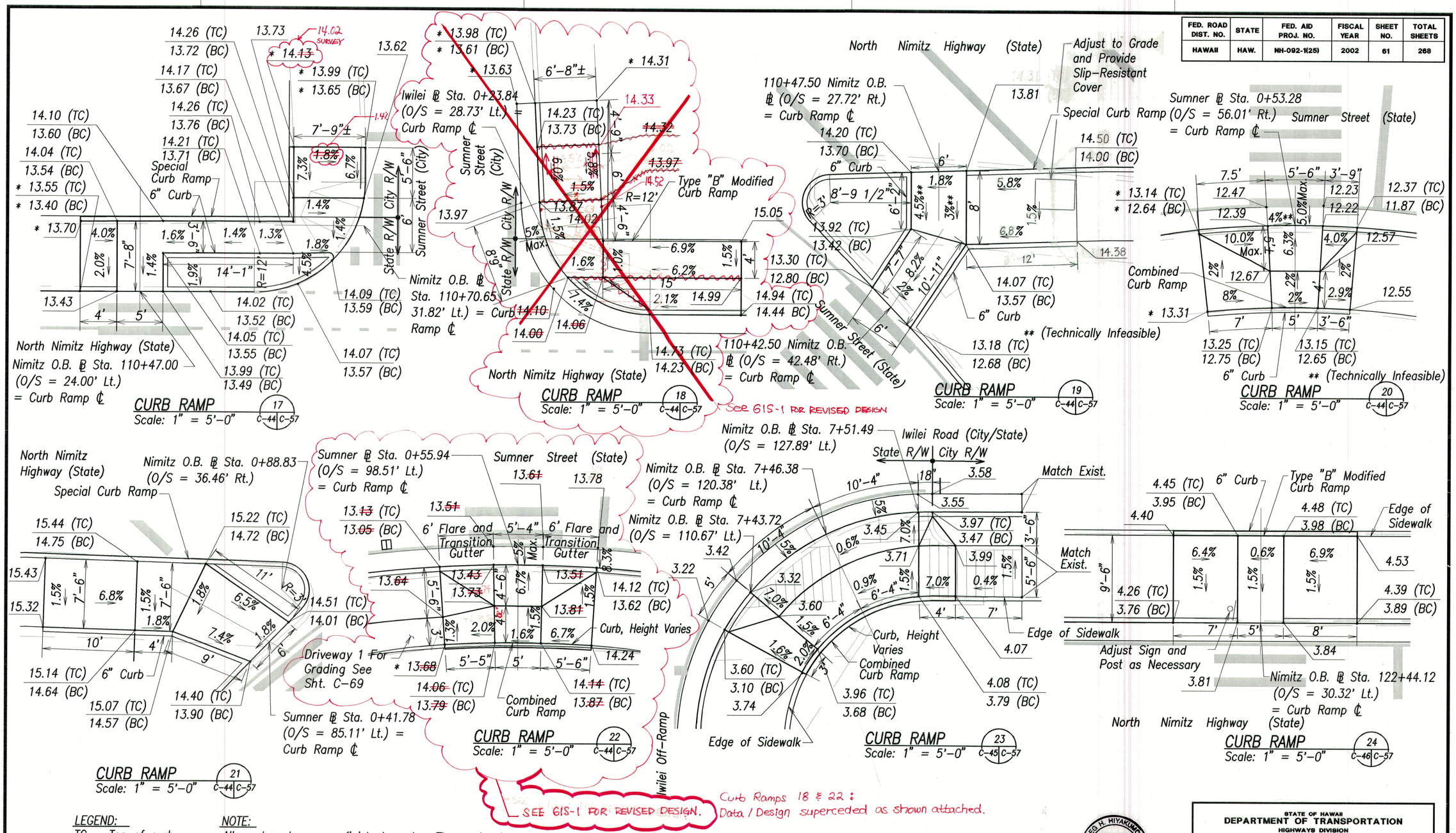

Curb Ramps 18 & 22: Data / Design superceded as shown attached.

LEGEND:
TC = Top of curb
BC = Bottom of curb

NOTE:
All grades shown are finished grades. The contractor shall verify in the field that the grades shown with an asterisk (*) are consistent with the existing grade at the indicated location and make necessary adjustments to make a smooth connection between new and existing surfaces. All adjusted surfaces shall be in full compliance with the accessibility requirements.

APPROVED:

11/2/01
Chief, Civil Engineering Branch, DPP Date
(For Work Within City ROW Only)

GREG H. HIYAKUMOTO LICENSED PROFESSIONAL ENGINEER No. 6662-C HAWAII, U.S.A.

THIS WORK WAS PREPARED BY ME OR UNDER MY SUPERVISION
11/1/01
SIGNATURE DATE

STATE OF HAWAII
DEPARTMENT OF TRANSPORTATION
HIGHWAYS DIVISION

CURB RAMP GRADING PLAN-3

NIMITZ HIGHWAY REHABILITATION
SUMNER STREET TO QUEEN STREET
F.A.I. Proj. No. NH-092-1(25)

Scale: As Shown Date: 10/19/01

SHEET No. C-57 OF 107 SHEETS

ORIGINAL PLAN | SURVEY PLOTTED BY | DRAWN BY | TRACED BY | DESIGNED BY | QUANTITIES BY | CHECKED BY | DATE | NOTE BOOK No.

(SF) CR-plan3.dwg.DWG September 16, 2000 10:50AM RMTC JOB NO.: 1-18681-0E

"AS-BUILT"

FED. ROAD DIST. NO.	STATE	PROJ. NO.	FISCAL YEAR	SHEET NO.	TOTAL SHEETS
HAWAII	HAW.	NH-092-1(25)	2002	61S-1	268

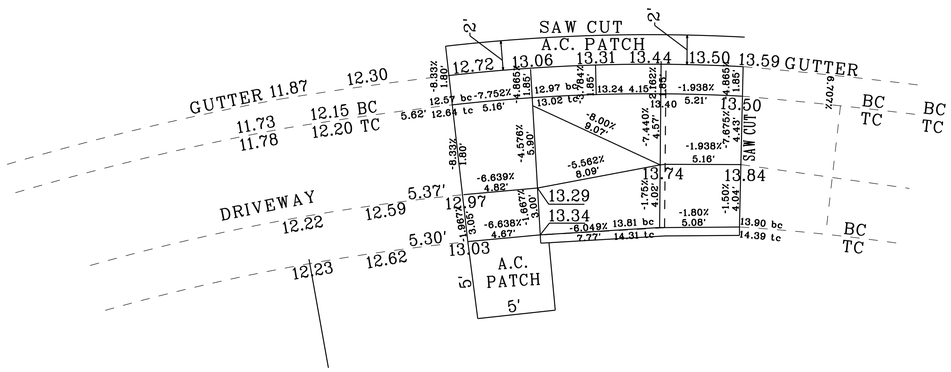

CURB RAMP
SCALE: 1" = 5'-0"
22
C-44 C-57

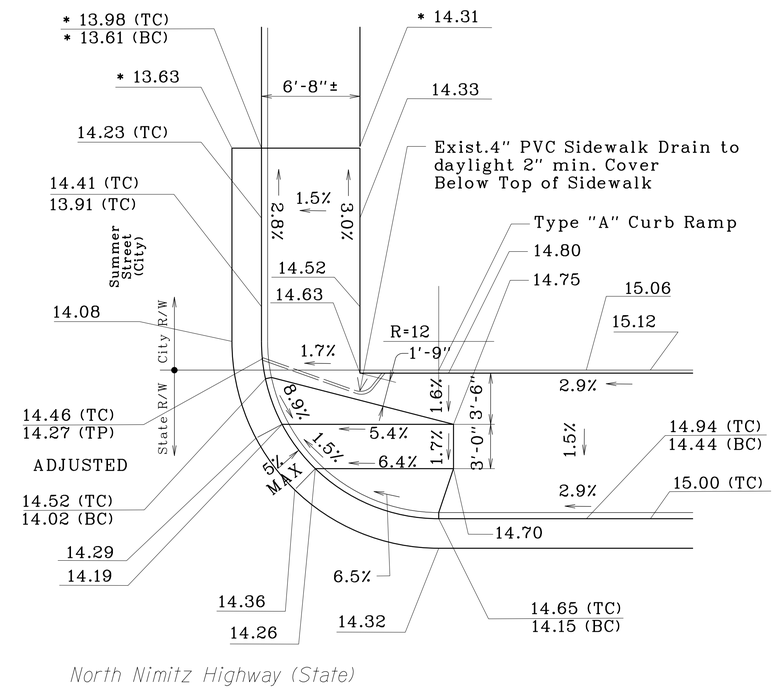

CURB RAMP
SCALE: 1" = 5'-0"
18
C-44 C-57

ORIGINAL PLANS	SURVEY PLOTTED BY	DATE
	DRAWN BY	
	TRACED BY	
NOTE BOOK	DESIGNED BY	
	QUANTITIES BY	
No.	CHECKED BY	

STATE OF HAWAII
DEPARTMENT OF TRANSPORTATION
HIGHWAYS DIVISION

CURB RAMP GRADING PLAN-3

NIMITZ HIGHWAY REHEBILITATION
SUMMER STREET TO QUEEN STREET
F.A.I Proj. No. NH-092-1(25)

Scale: AS SHOWN Date: 10/19/01

SHEET No. 18 OF 20 SHEETS

"AS-BUILT"

61S-1

FED. ROAD DIST. NO.	STATE	FED. AID PROJ. NO.	FISCAL YEAR	SHEET NO.	TOTAL SHEETS
HAWAII	HAW.	NH-092-1(25)	2002	62	268

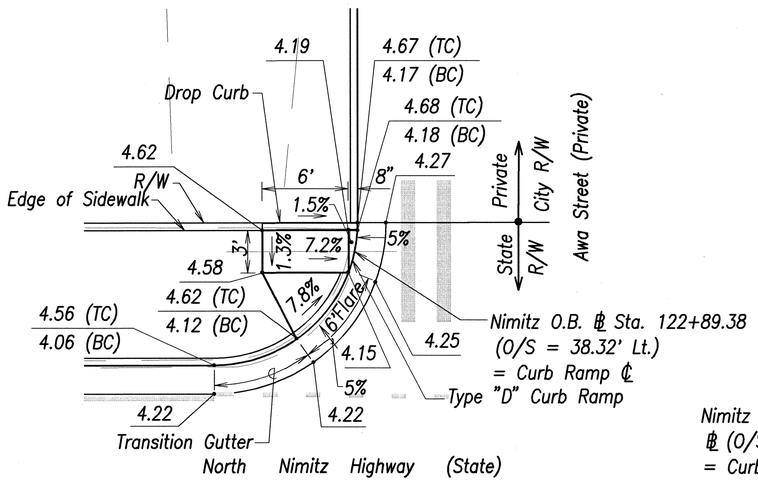

CURB RAMP 25
Scale: 1" = 5'-0" C-46 C-58

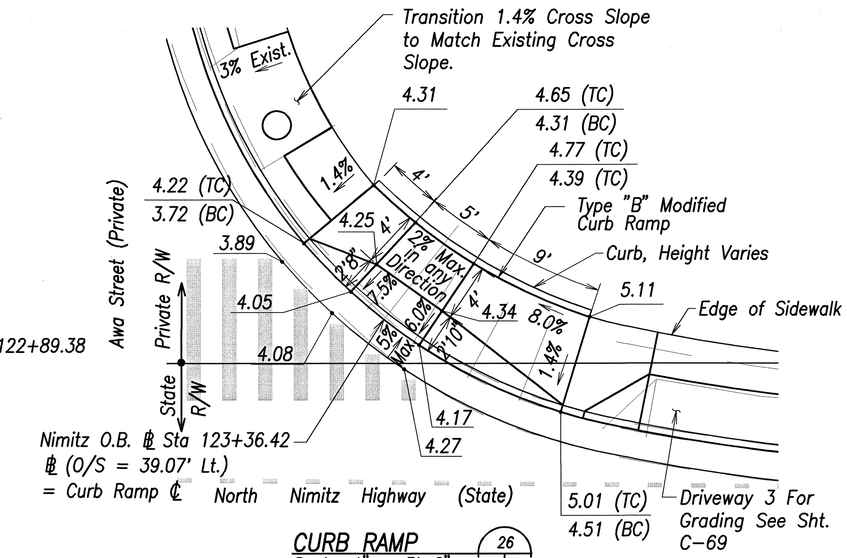

CURB RAMP 26
Scale: 1" = 5'-0" C-46 C-58

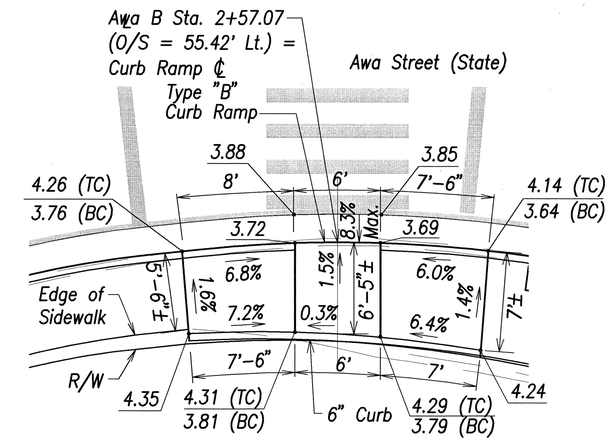

CURB RAMP 27
Scale: 1" = 5'-0" C-46 C-58

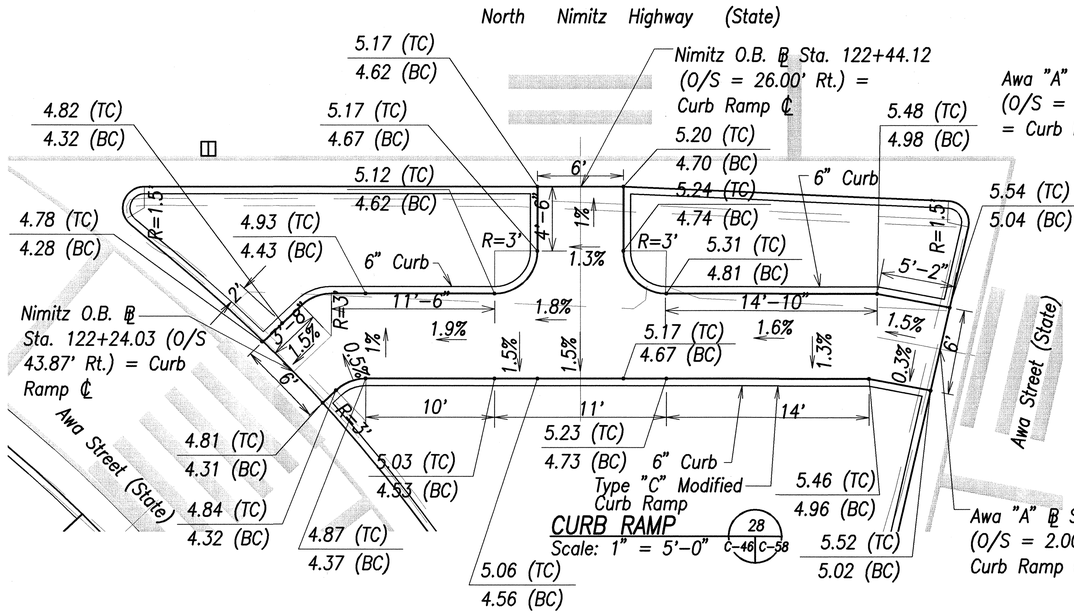

CURB RAMP 28
Scale: 1" = 5'-0" C-46 C-58

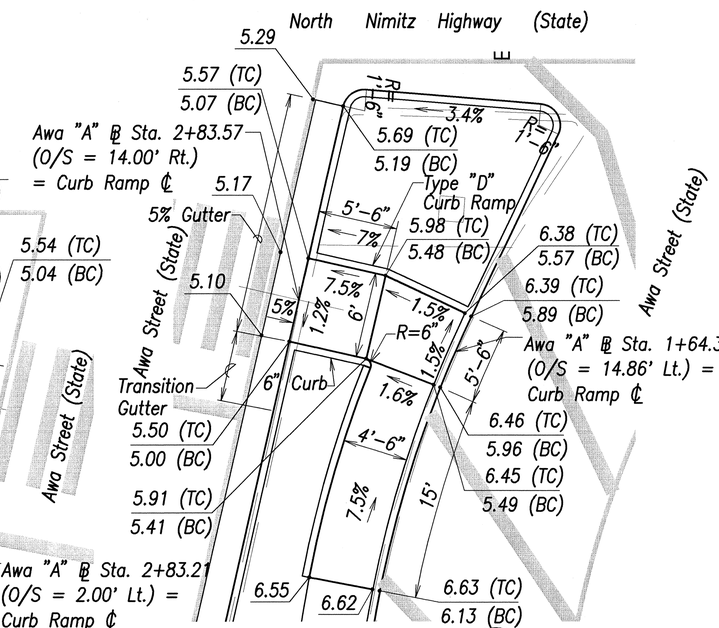

CURB RAMP 29
Scale: 1" = 5'-0" C-46 C-58

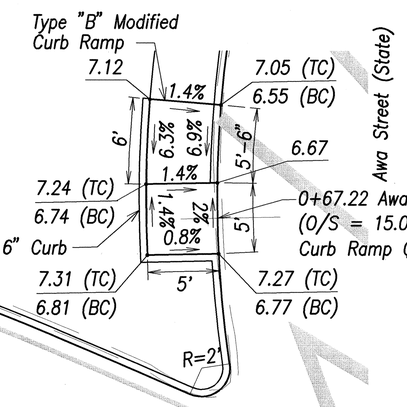

CURB RAMP 30
Scale: 1" = 5'-0" C-43 C-58

LEGEND:
TC = Top of curb
BC = Bottom of Curb

NOTE:
All grades shown are finished grades. The contractor shall verify in the field that the grades shown with an asterisk (*) are consistent with the existing grade at the indicated location and make necessary adjustments to make a smooth connection between new and existing surfaces. All adjusted surfaces shall be in full compliance with the accessibility requirements.

ORIGINAL PLAN	SURVEY PLOTTED BY	DATE
	SURVEY BY	
	TRACED BY	
NOTE BOOK	DESIGNED BY	
	QUANTITIES BY	
No.	CHECKED BY	

GREG H. HIYAKUMOTO
LICENSED PROFESSIONAL ENGINEER
No. 6662-C
HAWAII, U.S.A.

THIS WORK WAS PREPARED BY ME OR UNDER MY SUPERVISION

SIGNATURE 10/19/01 DATE

STATE OF HAWAII
DEPARTMENT OF TRANSPORTATION
HIGHWAYS DIVISION

CURB RAMP GRADING PLAN-4

NIMITZ HIGHWAY REHABILITATION
SUMNER STREET TO QUEEN STREET
F.A.I. Proj. No. NH-092-1(25)

Scale: As Shown Date: 10/19/01

SHEET No. C-58 OF 107 SHEETS

(SF) CR-plan4.dwg,DWG PMTC JOB NO.: 1-18681-0E
September 16, 2000 11:24AM

FED. ROAD DIST. NO.	STATE	FED. AID PROJ. NO.	FISCAL YEAR	SHEET NO.	TOTAL SHEETS
HAWAII	HAW.	NH-092-1(25)	2002	63	268

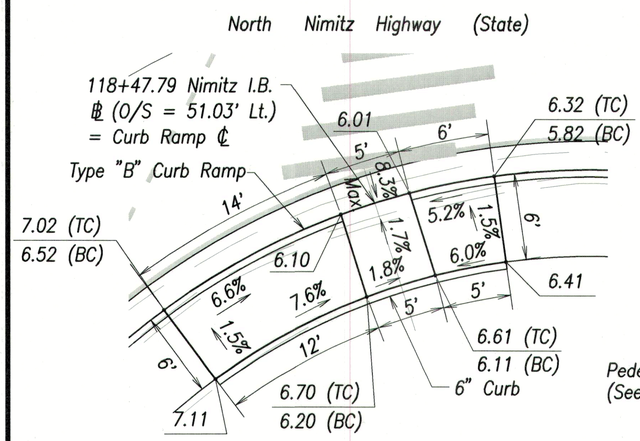

CURB RAMP (31) C-43 C-59
Scale: 1" = 5'-0"

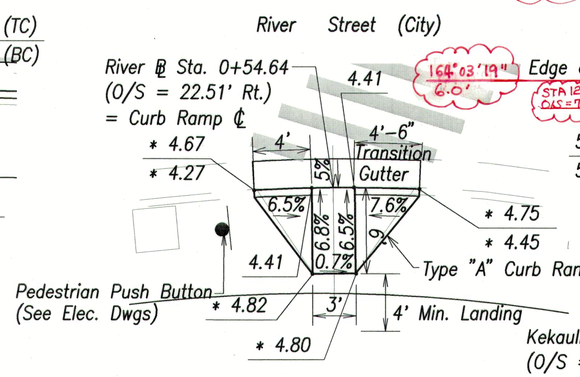

CURB RAMP (32) C-47 C-59
Scale: 1" = 5'-0"

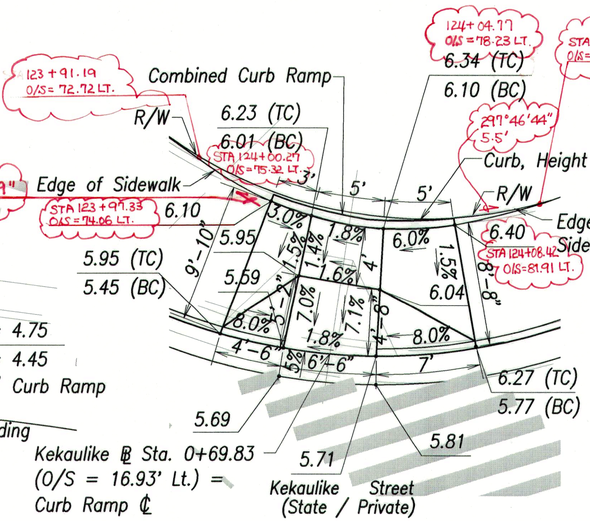

CURB RAMP (33) C-48 C-59
Scale: 1" = 5'-0"

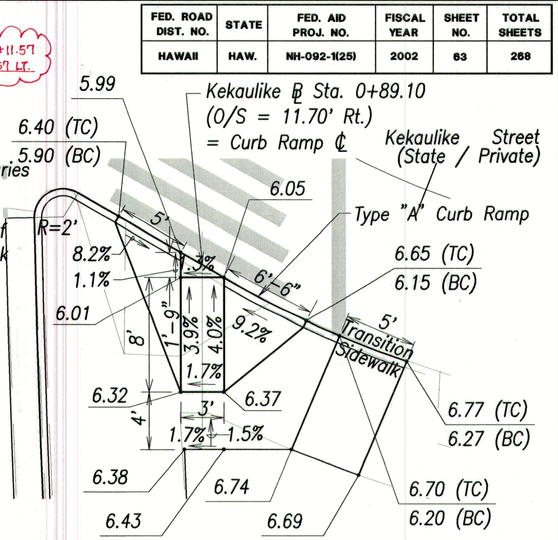

CURB RAMP (34) C-48 C-59
Scale: 1" = 5'-0"

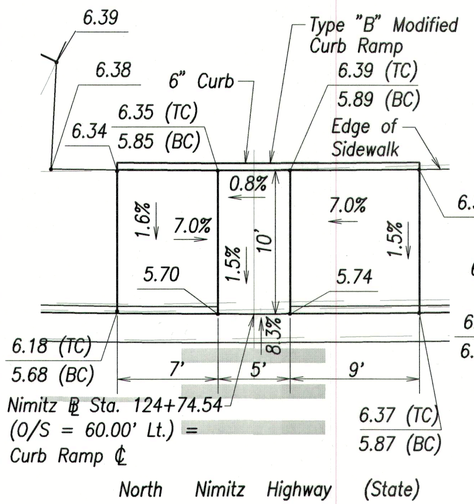

CURB RAMP (35) C-48 C-59
Scale: 1" = 5'-0"

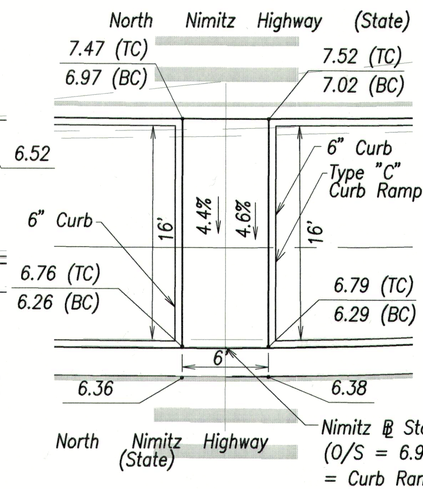

CURB RAMP (36) C-48 C-59
Scale: 1" = 5'-0"

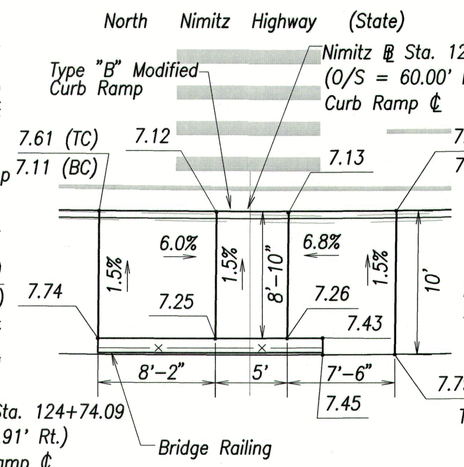

CURB RAMP (37) C-48 C-59
Scale: 1" = 5'-0"

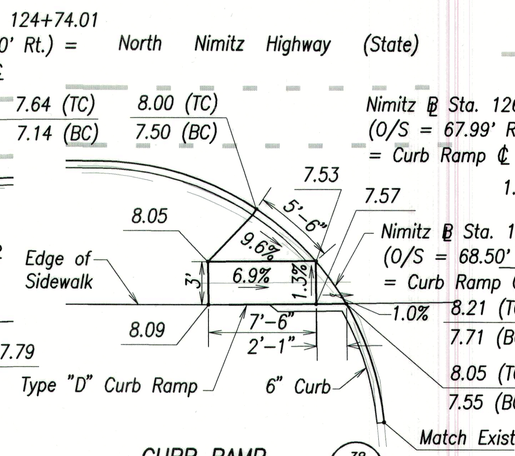

CURB RAMP (38) C-48 C-59
Scale: 1" = 5'-0"

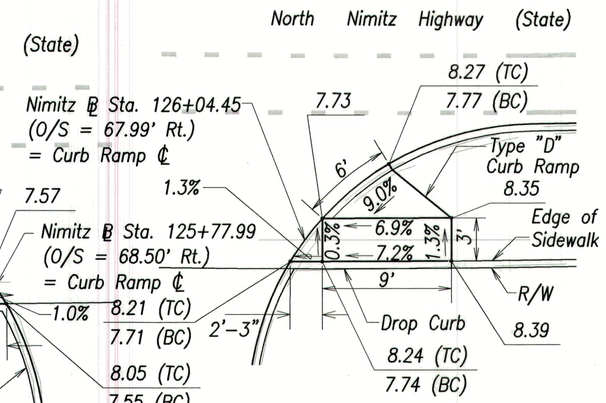

CURB RAMP (39) C-48 C-59
Scale: 1" = 5'-0"

LEGEND:
TC = Top of curb
BC = Bottom of curb

NOTE:
All grades shown are finished grades. The contractor shall verify in the field that the grades shown with an asterisk (*) are consistent with the existing grade at the indicated location and make necessary adjustments to make a smooth connection between new and existing surfaces. All adjusted surfaces shall be in full compliance with the accessibility requirements.

APPROVED:

M. Fujiyoshi 11/2/01
Chief, Civil Engineering Branch, DPP Date
(For Work Within City ROW Only)

GREG H. HIYAKUMOTO
LICENSED PROFESSIONAL ENGINEER
No. 6662-C
HAWAII, U.S.A.

THIS WORK WAS PREPARED BY ME OR UNDER MY SUPERVISION

SIGNATURE 10/19/01 DATE

STATE OF HAWAII
DEPARTMENT OF TRANSPORTATION
HIGHWAYS DIVISION

CURB RAMP GRADING PLAN-5

NIMITZ HIGHWAY REHABILITATION
SUMNER STREET TO QUEEN STREET
F.A.I. Proj. No. NH-092-1(25)

Scale: As shown Date: 10/19/01

SHEET No. C-59 OF 107 SHEETS

ORIGINAL PLAN | SURVEY PLOTTED BY | DRAWN BY | TRACED BY | DESIGNED BY | QUANTITIES BY | CHECKED BY | NOTE BOOK | No. | DATE

(SF) CR-plan5.dwg DWG September 14, 2001 RMTC JOB NO.: 1-18681-0E

"AS-BUILT"

FED. ROAD DIST. NO.	STATE	FED. AID PROJ. NO.	FISCAL YEAR	SHEET NO.	TOTAL SHEETS
HAWAII	HAW.	NH-092-1(25)	2002	64	268

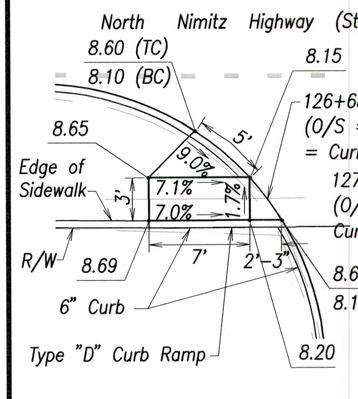

CURB RAMP 40
Scale: 1" = 5'-0"
C-48 C-60

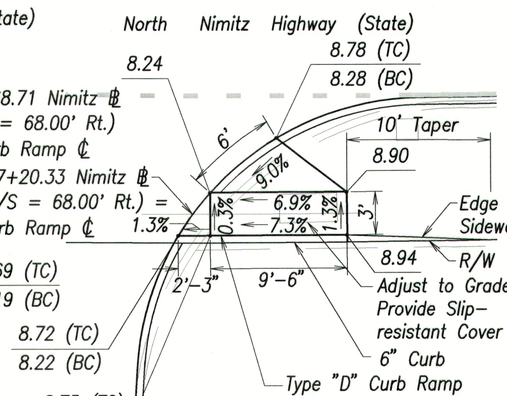

CURB RAMP 41
Scale: 1" = 5'-0"
C-48 C-60

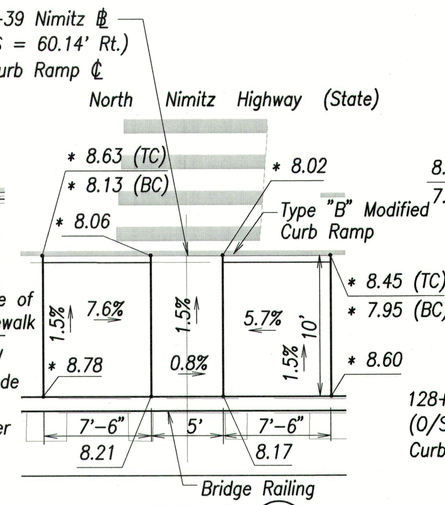

CURB RAMP 42
Scale: 1" = 5'-0"
C-48 C-60

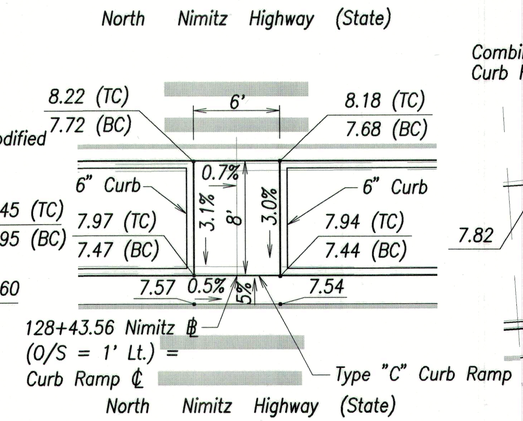

CURB RAMP 43
Scale: 1" = 5'-0"
C-48 C-60

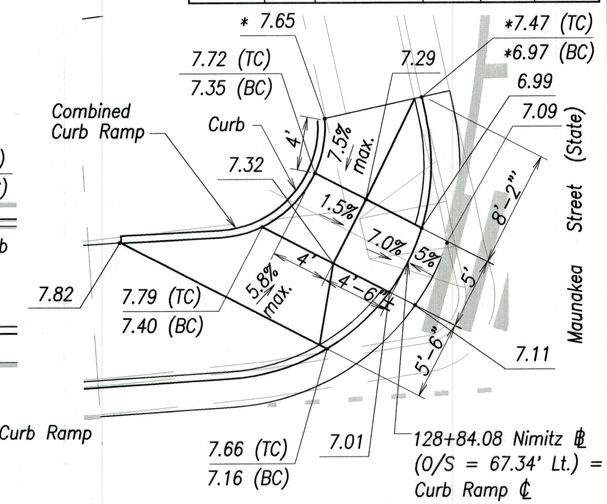

CURB RAMP 44
Scale: 1" = 5'-0"
C-48 C-60

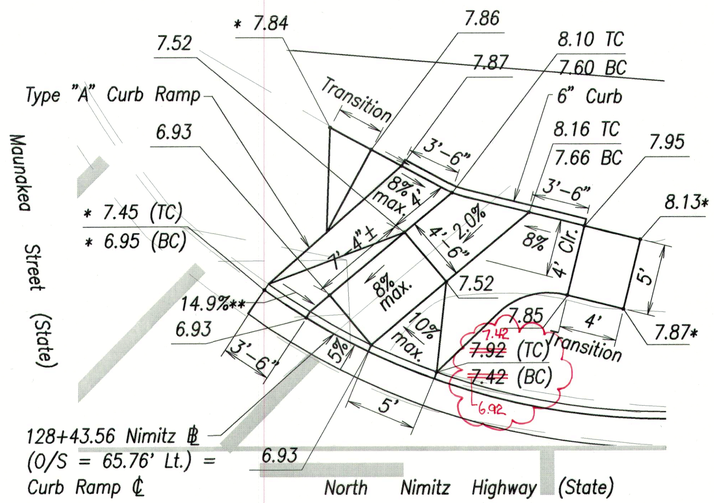

** Technically Infeasible

CURB RAMP 45
Scale: 1" = 5'-0"
C-48 C-60

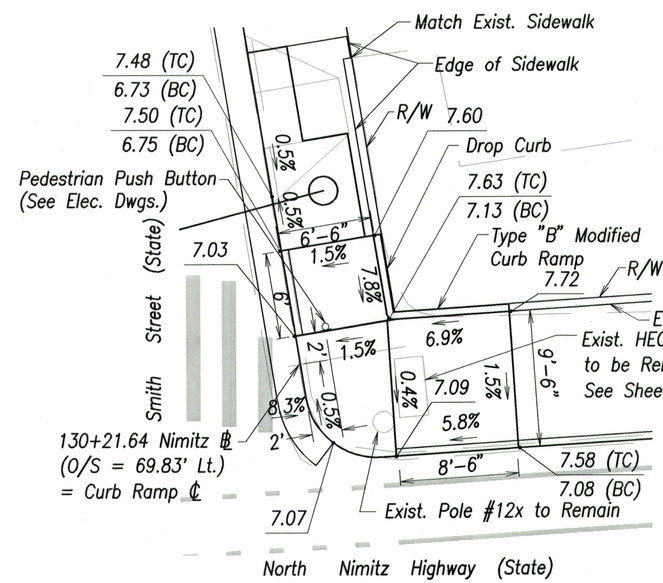

CURB RAMP 46
Scale: 1" = 5'-0"
C-49 C-60

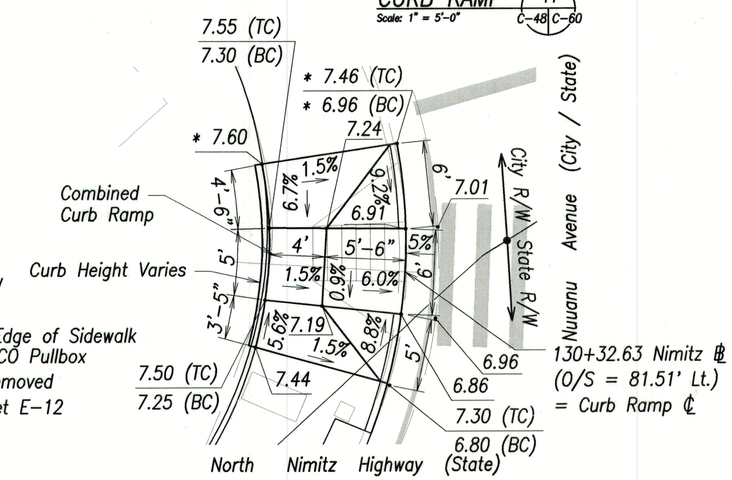

CURB RAMP 47
Scale: 1" = 5'-0"
C-49 C-60

LEGEND:
TC = Top of curb
BC = Bottom of curb

NOTE:
All grades shown are finished grades. The contractor shall verify in the field that the grades shown with an asterisk (*) are consistent with the existing grade at the indicated location and make necessary adjustments to make a smooth connection between new and existing surfaces. All adjusted surfaces shall be in full compliance with the accessibility requirements.

APPROVED:

M. Fujiyoshi 11/2/01
Chief, Civil Engineering Branch, DPP Date
(For Work Within City ROW Only)

GREGG H. HIYAKUMOTO
LICENSED PROFESSIONAL ENGINEER
No. 6662-C
HAWAII, U.S.A.

THIS WORK WAS PREPARED BY ME OR UNDER MY SUPERVISION
SIGNATURE DATE

STATE OF HAWAII
DEPARTMENT OF TRANSPORTATION
HIGHWAYS DIVISION

CURB RAMP GRADING PLAN-6

NIMITZ HIGHWAY REHABILITATION
SUMNER STREET TO QUEEN STREET
F.A.I. Proj. No. NH-092-1(25)

Scale: As shown Date: 10/19/01

SHEET No. C-60 OF 107 SHEETS

ORIGINAL PLAN
SURVEY PLOTTED BY
SURVEY NOTES BY
TRACED BY
NOTE BOOK
DESIGNED BY
QUANTITIES BY
CHECKED BY
DATE
No.

(SF) CR-plan6.dwg,DWG September 14 2001 11:14AM
RMTC JOB NO.: 1-18681-0E

"AS-BUILT"

FED. ROAD DIST. NO.	STATE	FED. AID PROJ. NO.	FISCAL YEAR	SHEET NO.	TOTAL SHEETS
HAWAII	HAW.	NH-092-1(25)	2002	65	268

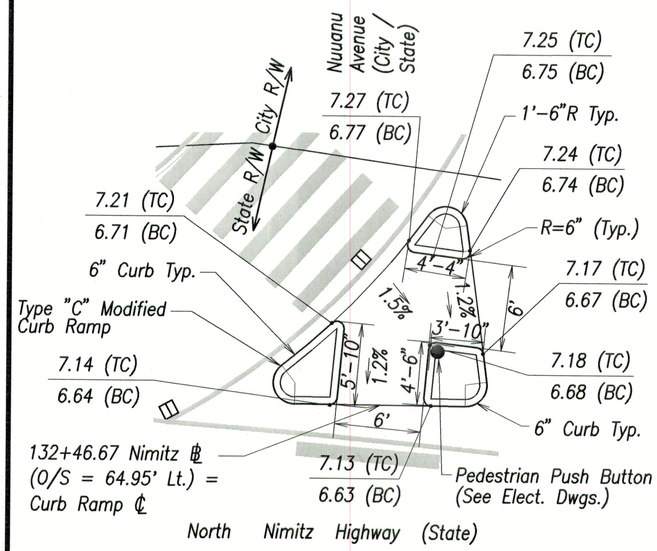

CURB RAMP 48
Scale: 1" = 5'-0"
C-49 C-61

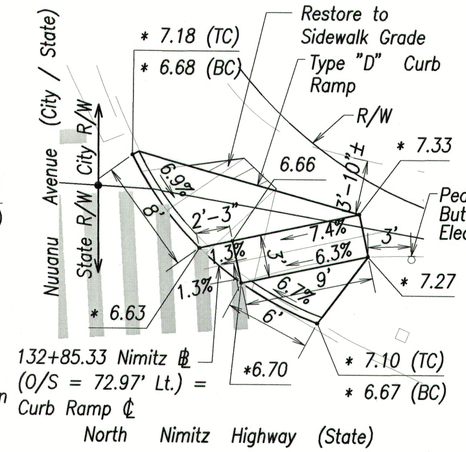

CURB RAMP 49
Scale: 1" = 5'-0"
C-49 C-61

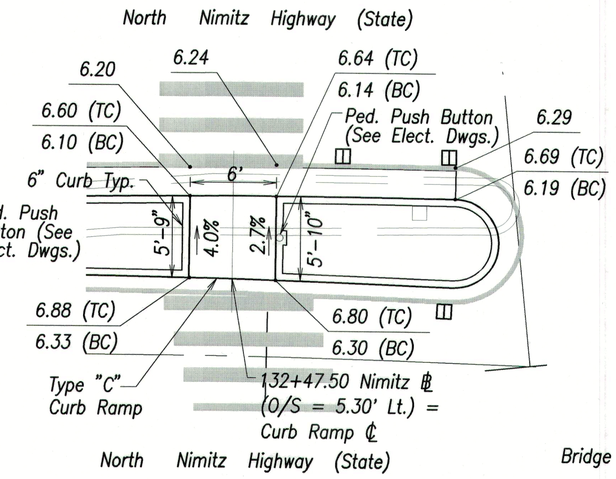

CURB RAMP 50
Scale: 1" = 5'-0"
C-49 C-61

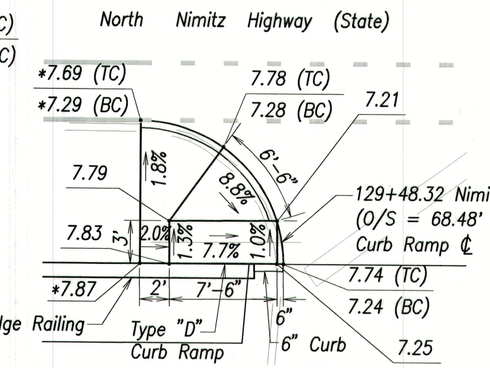

CURB RAMP 51
Scale: 1" = 5'-0"
C-49 C-61

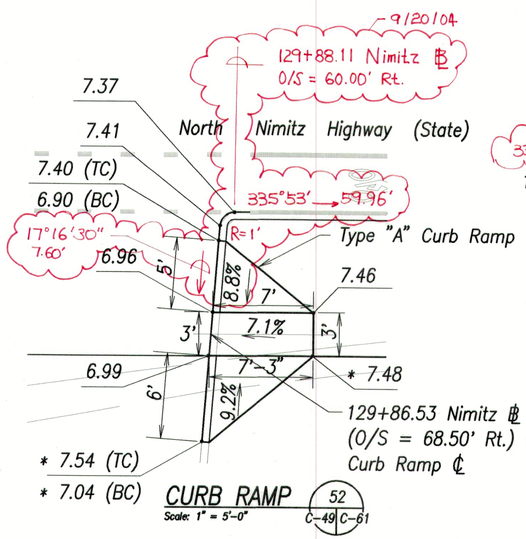

CURB RAMP 52
Scale: 1" = 5'-0"
C-49 C-61

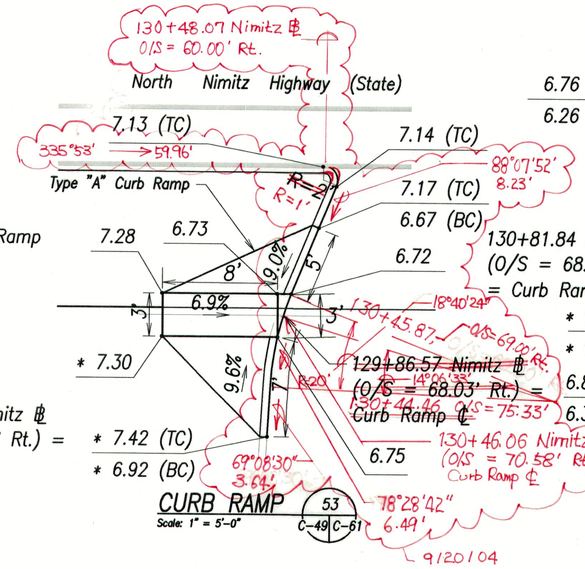

CURB RAMP 53
Scale: 1" = 5'-0"
C-49 C-61

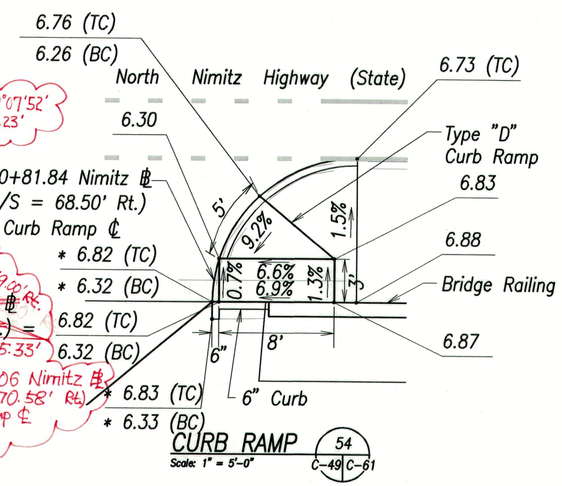

CURB RAMP 54
Scale: 1" = 5'-0"
C-49 C-61

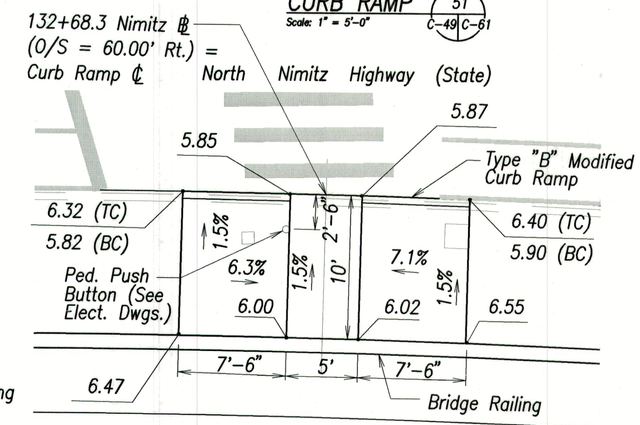

CURB RAMP 55
Scale: 1" = 5'-0"
C-49 C-61

As-Built: Superceded ~~as shown attached.~~
See sheet 65S-1

LEGEND:
TC = Top of curb
BC = Bottom of curb

NOTE:
All grades shown are finished grades. The contractor shall verify in the field that the grades shown with an asterisk (*) are consistent with the existing grade at the indicated location and make necessary adjustments to make a smooth connection between new and existing surfaces. All adjusted surfaces shall be in full compliance with the accessibility requirements.

APPROVED:

M. [illegible] 11/2/01
Chief, Civil Engineering Branch, DPP Date
(For Work Within City ROW Only)

GREG H. HIYAKUMOTO
LICENSED PROFESSIONAL ENGINEER
No. 6662-C
HAWAII, U.S.A.

THIS WORK WAS PREPARED BY ME OR UNDER MY SUPERVISION
SIGNATURE DATE

STATE OF HAWAII
DEPARTMENT OF TRANSPORTATION
HIGHWAYS DIVISION

CURB RAMP GRADING PLAN-7

NIMITZ HIGHWAY REHABILITATION
SUMNER STREET TO QUEEN STREET
F.A.I. Proj. No. NH-092-1(25)

Scale: 1"=5' Date: 10/19/01

SHEET No. C-61 OF 107 SHEETS

ORIGINAL PLAN | SURVEY PLOTTED BY | SURVEY BY | TRACED BY | DESIGNED BY | QUANTITIES BY | CHECKED BY | NOTE BOOK | No. | DATE

"AS-BUILT"

K:\civil\18681\ada plans\CR-plan.dwg Plot Date: Jul 21, 2004 1:16pm suef

FED. ROAD DIST. NO.	STATE	FED. AID PROJ. NO.	FISCAL YEAR	SHEET NO.	TOTAL SHEETS
HAWAII	HAW.	NH-092-1(25)	2002	65S-1	268

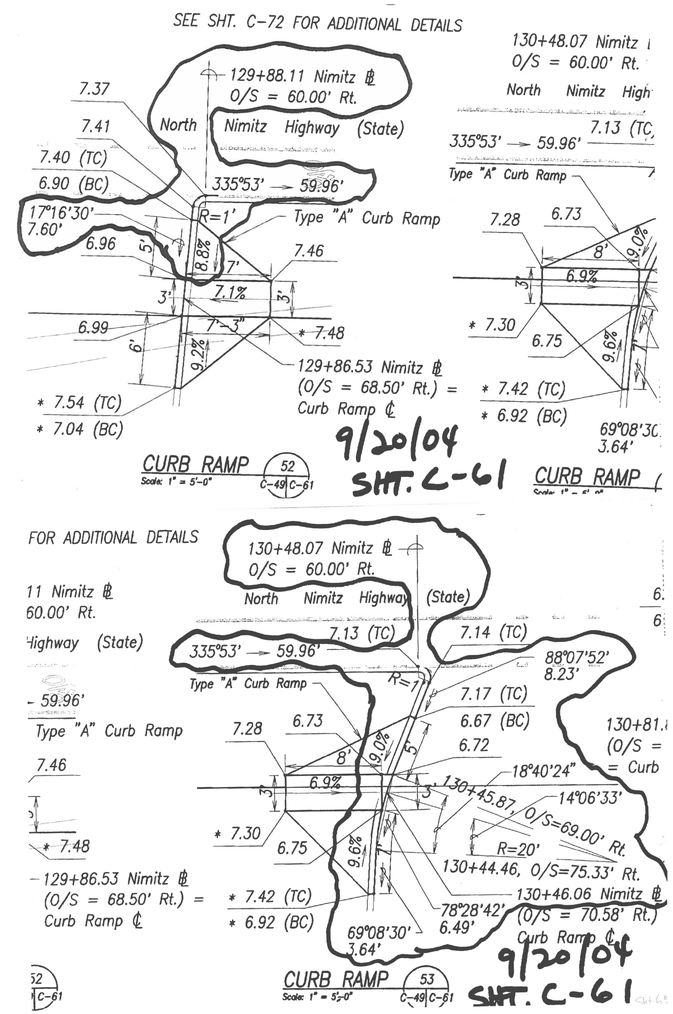

ORIGINAL PLAN	SURVEY PLOTTED BY	DATE
	DRAWN BY	
	TRACED BY	
NOTE BOOK	DESIGNED BY	
	QUANTITIES BY	
No.	CHECKED BY	

STATE OF HAWAII
DEPARTMENT OF TRANSPORTATION
HIGHWAYS DIVISION

CURB RAMP GRADING PLAN-7

NIMITZ HIGHWAY REHEBILITATION
SUMMER STREET TO QUEEN STREET
F.A.I Proj. No. NH-092-1(25)

Scale: 1" = 5' Date: 10/19/01

SHEET No. C-61 OF 107 SHEETS

"AS-BUILT"

65S–1

FED. ROAD DIST. NO.	STATE	FED. AID PROJ. NO.	FISCAL YEAR	SHEET NO.	TOTAL SHEETS
HAWAII	HAW.	NH-092-1(25)	2002	66	268

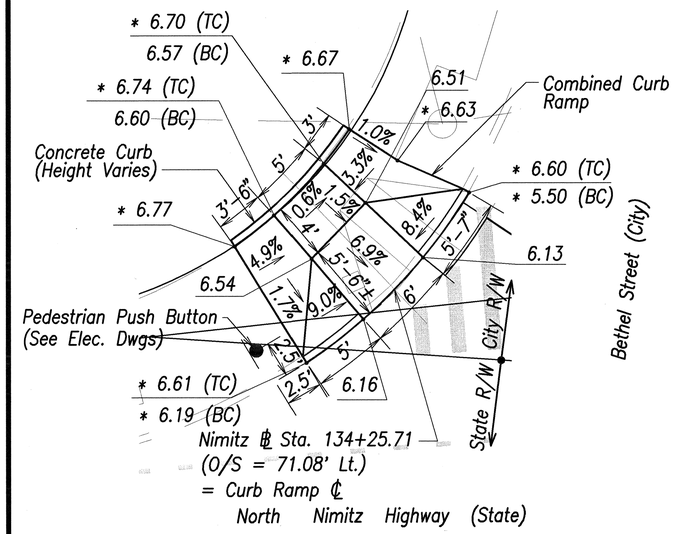

CURB RAMP (56) C-50 C-62
Scale: 1" = 5'-0"

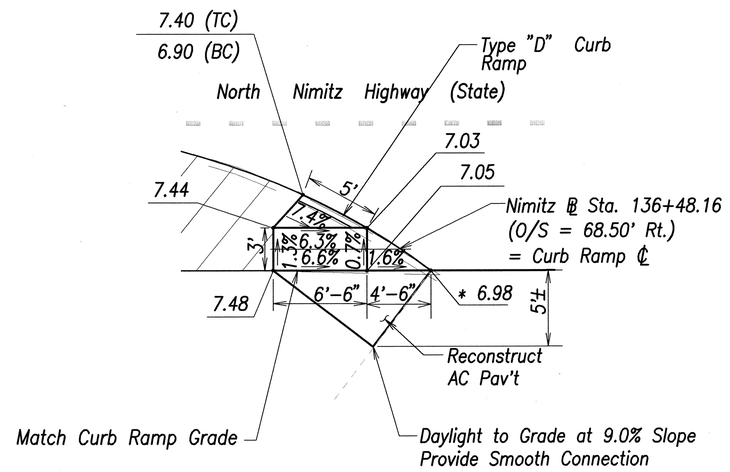

CURB RAMP (57) C-51 C-62
Scale: 1" = 5'-0"

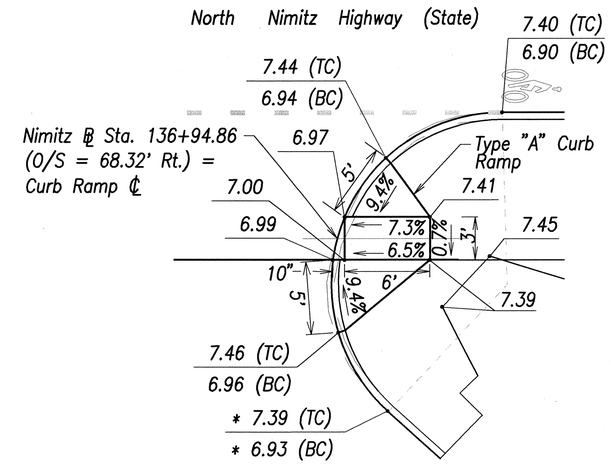

CURB RAMP (58) C-51 C-62
Scale: 1" = 5'-0"

LEGEND:

TC = Top of curb
BC = Bottom of curb

NOTE:

All grades shown are finished grades. The contractor shall verify in the field that the grades shown with an asterisk (*) are consistent with the existing grade at the indicated location and make necessary adjustments to make a smooth connection between new and existing surfaces. All adjusted surfaces shall be in full compliance with the accessibility requirements.

ORIGINAL PLAN	SURVEY PLOTTED BY	DATE
	DRAWN BY	
	TRACED BY	
NOTE BOOK	DESIGNED BY	
	QUANTITIES BY	
No.	CHECKED BY	

APPROVED:

11/2/01
Chief, Civil Engineering Branch, DPP Date
(For Work Within City ROW Only)

GREG H. HIYAKUMOTO
LICENSED PROFESSIONAL ENGINEER
No. 9862-C
HAWAII, U.S.A.

THIS WORK WAS PREPARED BY ME OR UNDER MY SUPERVISION

SIGNATURE 11/1/01 DATE

STATE OF HAWAII
DEPARTMENT OF TRANSPORTATION
HIGHWAYS DIVISION

CURB RAMP GRADING PLAN-8

NIMITZ HIGHWAY REHABILITATION
SUMNER STREET TO QUEEN STREET
F.A.I. Proj. No. NH-092-1(25)

Scale: As shown Date: 10/19/01

SHEET No. C-62 OF 107 SHEETS

K:\civil\18681\ada plans\CR-plan.dwg JOB NO.: 18681-56 pm suef

FED. ROAD DIST. NO.	STATE	FED. AID PROJ. NO.	FISCAL YEAR	SHEET NO.	TOTAL SHEETS
HAWAII	HAW.	NH-092-1(25)	2002	ADD. 67	268

CURB RAMP NOTES:

1. These details are intended as curb ramp guidelines for design and construction.
2. A site specific detail that meets American with Disabilites Act (ADA) requirements shall be shown on the plans.
3. To ensure constructability, spot elevations shall be used in the design. Benchmarks and horizontal ties shall be provided for construction stakeout.
4. A 2% maximum cross slope shall be maintained in the direction of pedestrian traffic.
5. Design slopes of flares and ramps shall be labeled.
6. Curb ramps shall be installed at 90° to the sidewalk or to the maximum extent feasible, in alterations.
7. At intersections for new construction, curb ramps for each crosswalk are preferred and shall be in line and into the crosswalk. However, for existing sites, a single curb ramp (diagonal curb ramp) serving two crosswalks can be approved if the design detail is acceptable by the State.
8. Subject to field conditions, the Engineer shall determine the final location of curb ramps.
9. Prior to construction, if a curb ramp cannot be designed according to DOT, Highways Division curb ramp guidelines, either a "Technically Infeasible" form (for existing construction) or a "Structurally Impracticable" form (for new construction) shall be filled-out and submitted to the DOT, Highways Division for signature which will then be submitted to the Disability and Communication Access Board (DCAB).
10. The maximum slopes of adjoining gutters or road surface immediately fronting the curb ramp shall not exceed 5% for Type A and D ramps and 8.33% for Type B, C, and E ramps. The counterslope may be exceeded when the change of grade does not exceed 13% (11% preferred) over a distance of 2 ft. Exceeding the 13% (11% preferred) change in grade will cause a person in a wheelchair to tip forward and/or fall backward.
11. All pullboxes shall be installed away from the curb ramp and within the sidewalk/unpaved area to the maximum extent feasible.
12. Where necessary, existing pullboxes, handholes, manholes, etc. shall be adjusted to match curb ramp grade. Adjustments shall not be paid for separately but shall be considered incidental to the various curb ramp items unless indicated otherwise.
13. Transitions from ramps to gutters and roadways shall be flush. If needed, a lip with a maximum vertical change in level of 1/4" is allowed.
14. Curb ramps and sidewalks shall be designed and constructed to eliminate ponding to the maximum extent feasible.
15. The pedestrian push button shall meet operational and reach requirements of the American with Disabilities Act Accessibility Guidelines (ADAAG):
    a) Forward Reach. The maximum height for forward reach shall be 48".
    b) Side Reach. The maximum height for side reach shall be 54".
    c) Operation. Controls and operating mechanisms shall be operable with one hand and shall not require tight grasping, pinching, or twisting of the wrist. The force required to activate controls shall be no greater than 5 lbf.
16. There shall be a 30"x48" level ground surface (2% max. cross slope, both directions) for a forward or side approach, as appropriate, to a pedestrian push button.
17. Construction joints are required to join curb ramps with sidewalks.
18. Unless otherwise noted, new gutters are required as shown.
19. All curb ramps shall be reinforced with 6x6 W1.4/W1.4 welded wire fabric.
20. Surface of sidewalks and curb ramps shall be firm, stable, and slip-resistant. This includes the surfaces of pullboxes, valve covers, manhole covers, etc.
21. Bed course material is required for curb ramps, sidewalks, and gutters.
22. Prior to construction, all plans and specifications shall be submitted (for review) to DCAB to ensure conformance with the ADAAG as well as any supplemental design specifications established or adopted by DCAB.
23. If a curb ramp is not constructed according to the plans, the Contractor shall reconstruct the curb ramp at no cost to the State. Construction tolerance for Portland Cement Concrete shall be based on 1/4" inch per 10 ft. (0.2%). Remedial measures will not be accepted.
24. Additional information is available from:
    a) American with Disabilities Act Accessibility Guidelines (ADAAG), September 1998, The Access Board.
    b) Accessible Rights-of-Way: A Design Guide, November 1999, The Access Board.
    c) Designing Sidewalks and Trails for Access, July 1999, FHWA.

SIDEWALK NOTES:

1. All sidewalks shall provide a minimum clear width of 3'-0" (excluding curb) for pedestrian circulation. If this cannot be met, a minimum 32-inch clear width is allowed for a distance of 24-inches.
2. Narrow sidewalks (3'-0" min. width, excluding curb) may prohibit the installation of any sign posts, utility poles, fire hydrants, traffic signal standards, light poles, etc. in the sidewalk.
3. Passing spaces along new sidewalks with 5' clear width or less shall be provided at maximum 200' intervals as required by ADA guidelines. The passing area shall be a minimum 5' wide by 5' long as feasible.
4. For new construction, the minimum sidewalk width shall be 6'-0" (excluding curb). The cross slope shall not exceed 2%.
5. If possible, install utility poles, fire hydrants, light poles, sign posts, pullboxes, etc. off of sidewalk but within the right-of-way.
6. Objects protruding from utility poles and walls adjacent to the sidewalks (i.e. wall mounted fire hydrants, telephones, meters on poles, etc.) shall be mounted to meet the current American with Disabilities Act Accessibility Guidelines (ADAAG) and will be subject to Engineer's approval.
7. All new wheelchair-accessible curb ramps and flares shall be no steeper than 12H:1V. Ramps and flares shall be lengthened as required to achieve this maximum slope.

GREG H. HIYAKUMOTO
LICENSED PROFESSIONAL ENGINEER
No. 6662-C
HAWAII, U.S.A.

THIS WORK WAS PREPARED BY ME OR UNDER MY SUPERVISION

SIGNATURE 1/11/02 DATE

Date	Revision
01/10/02	Deleted Detectable Warnings at Curb Ramps

STATE OF HAWAII
DEPARTMENT OF TRANSPORTATION
HIGHWAYS DIVISION

CURB RAMP DETAILS 1

NIMITZ HIGHWAY REHABILITATION
SUMNER STREET TO QUEEN STREET
F.A.I. Proj. No. NH-092-1(25)

Scale: Not to Scale Date: 10/19/01

SHEET No. C-63 OF 107 SHEETS

ADD.67

ORIGINAL PLAN | SURVEY PLOTTED BY | DRAWN BY | TRACED BY | DESIGNED BY | QUANTITIES BY | CHECKED BY | DATE
NOTE BOOK No.

RMTC JOB NO.: 1-18681-0E

FED. ROAD DIST. NO.	STATE	FED. AID PROJ. NO.	FISCAL YEAR	SHEET NO.	TOTAL SHEETS
HAWAII	HAW.	NH-092-1(25)	2002	68	268

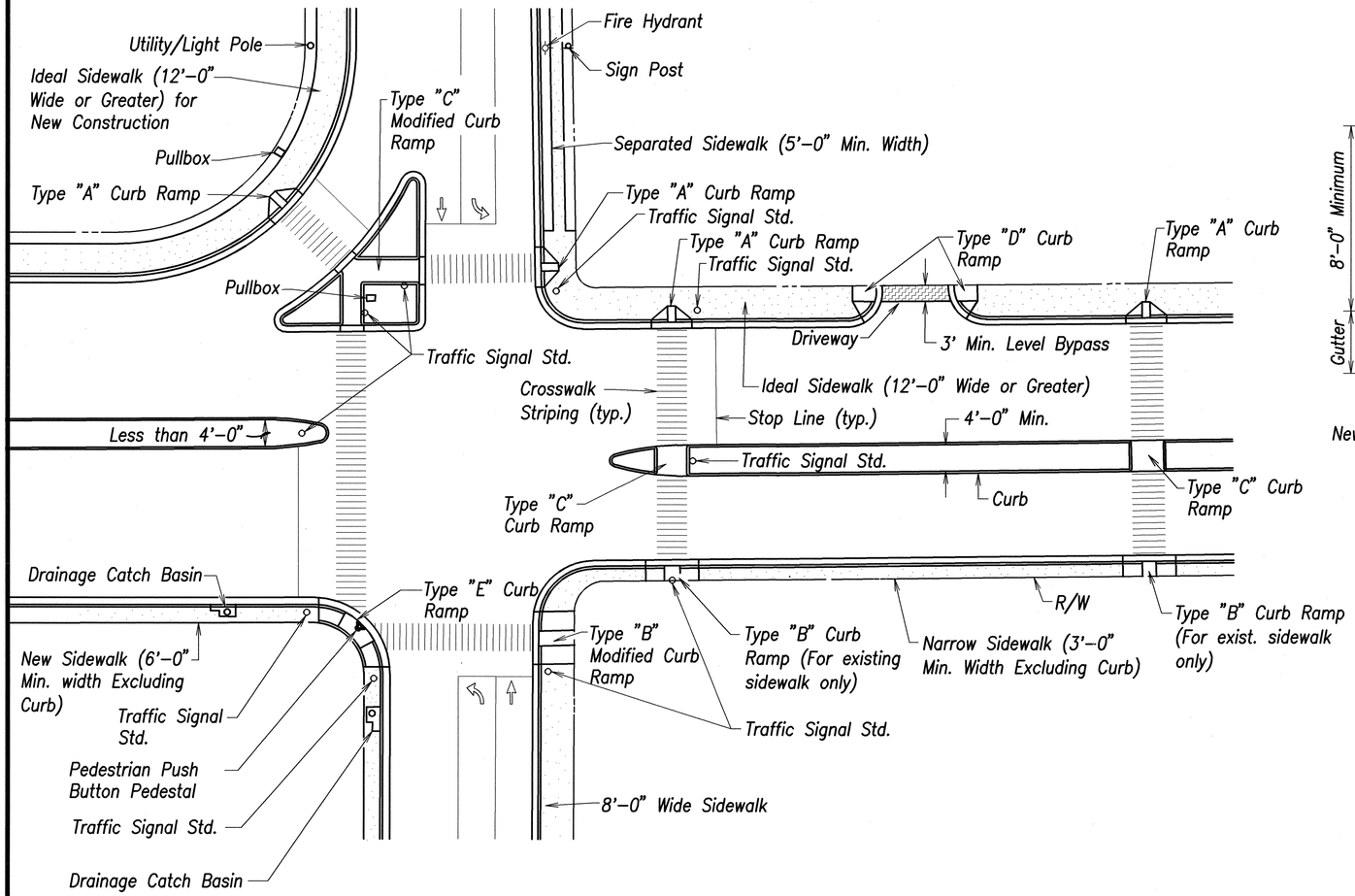

TYPICAL CURB RAMPS
Scale: Not to Scale

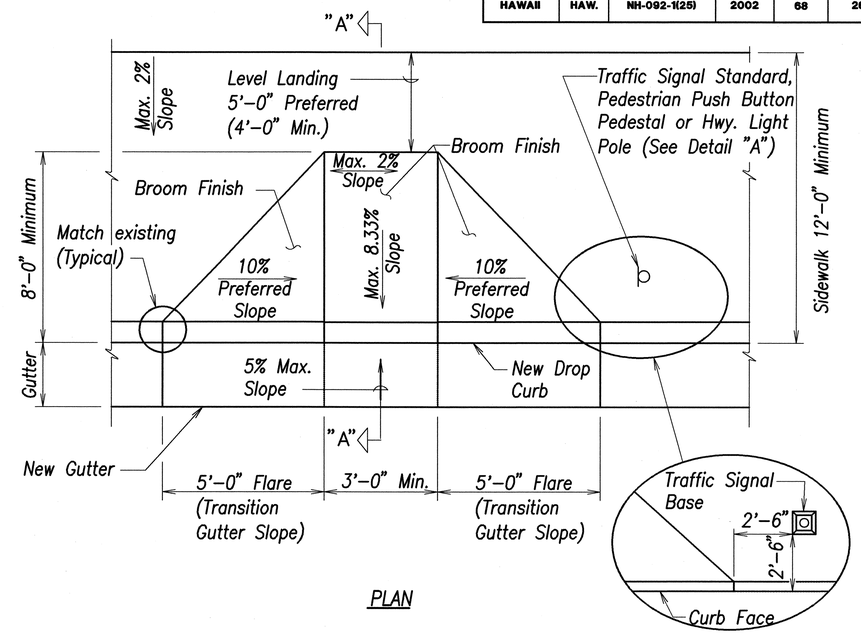

PLAN

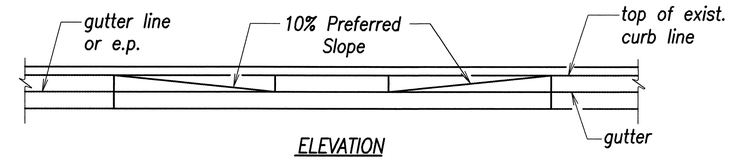

ELEVATION

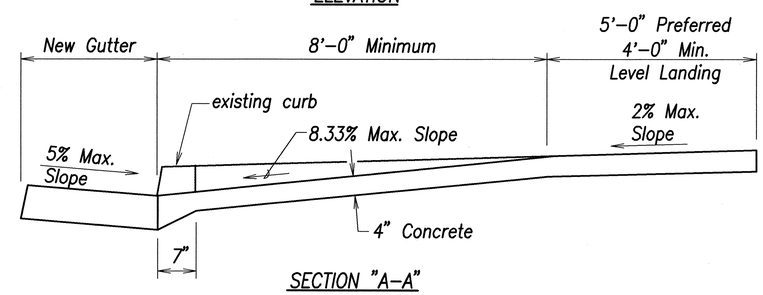

SECTION "A-A"

CURB RAMP - TYPE "A"
SIDEWALK WIDTH 12'-0" OR GREATER

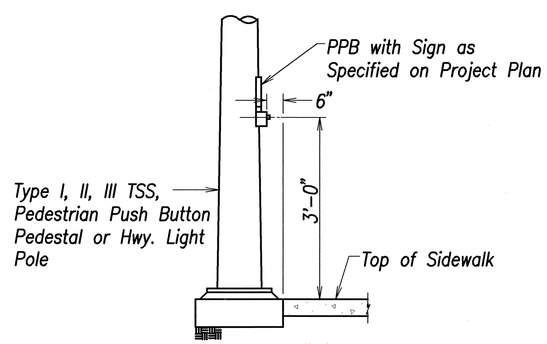

DETAIL "A"
Scale: Not to Scale

ORIGINAL PLAN	SURVEY PLOTTED BY	DATE
	DRAWN BY	
	TRACED BY	
NOTE BOOK	DESIGNED BY	
	QUANTITIES BY	
No.	CHECKED BY	

GREG H. HIYAKUMOTO
LICENSED PROFESSIONAL ENGINEER
No. 6662-C
HAWAII, U.S.A.

THIS WORK WAS PREPARED BY ME OR UNDER MY SUPERVISION

SIGNATURE DATE 10/19/01

STATE OF HAWAII
DEPARTMENT OF TRANSPORTATION
HIGHWAYS DIVISION

CURB RAMP DETAILS - 2

NIMITZ HIGHWAY REHABILITATION
SUMNER STREET TO QUEEN STREET
F.A.I. Proj. No. NH-092-1(25)

Scale: Not to Scale Date: 10/19/01

SHEET No. C-64 OF 107 SHEETS

RMTC JOB NO.: 1-18681-0E

FED. ROAD DIST. NO.	STATE	FED. AID PROJ. NO.	FISCAL YEAR	SHEET NO.	TOTAL SHEETS
HAWAII	HAW.	NH-092-1(25)	2002	69	268

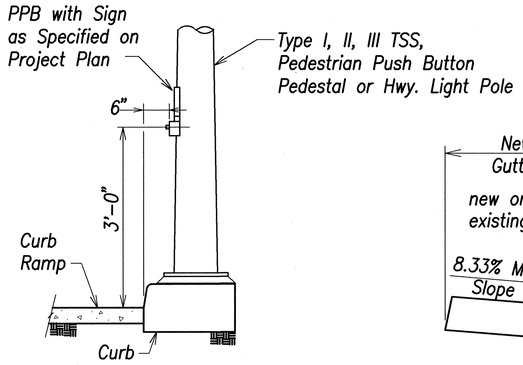

DETAIL "B"

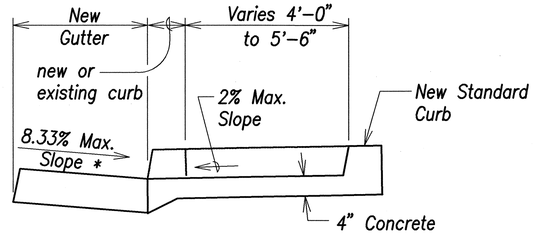

TYPICAL SECTION

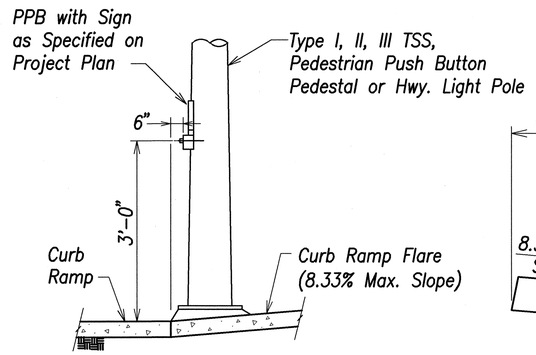

DETAIL "C"

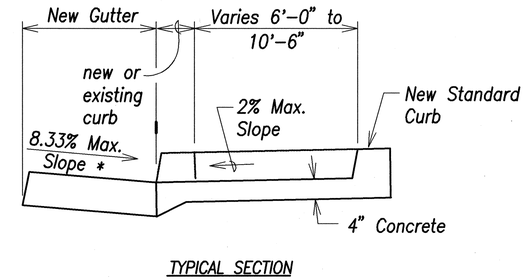

TYPICAL SECTION

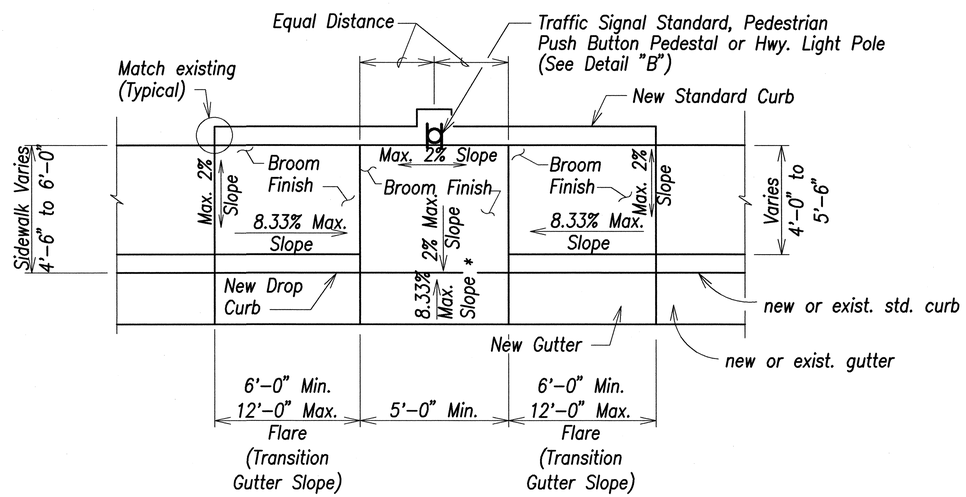

PLAN

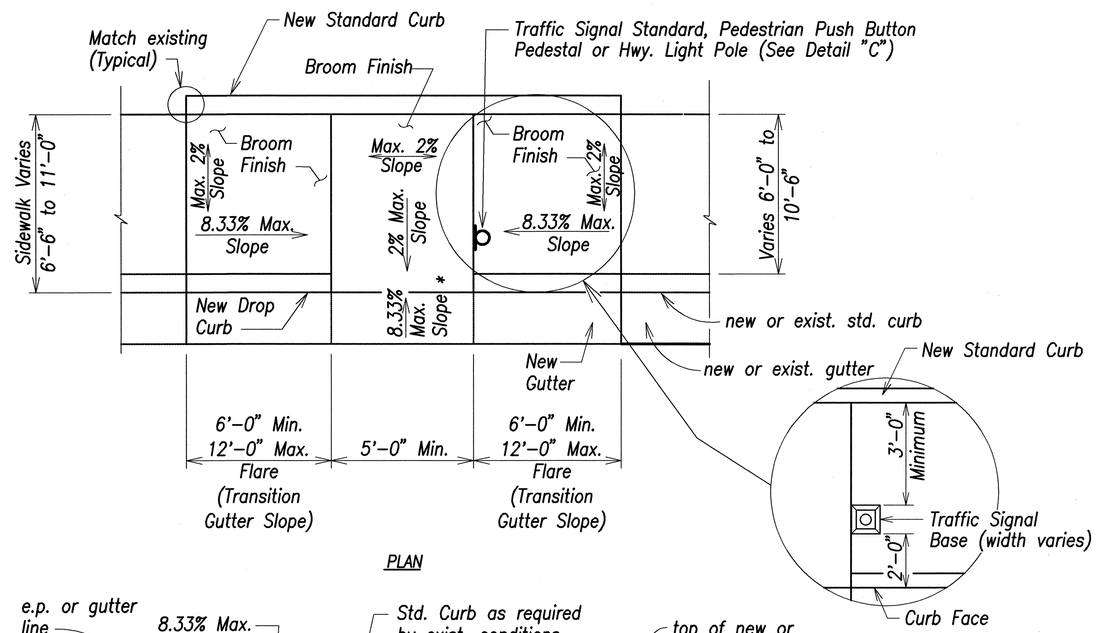

PLAN

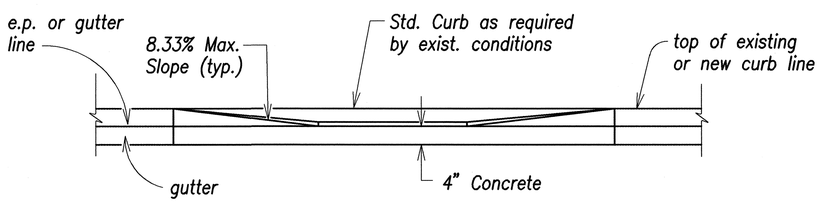

ELEVATION

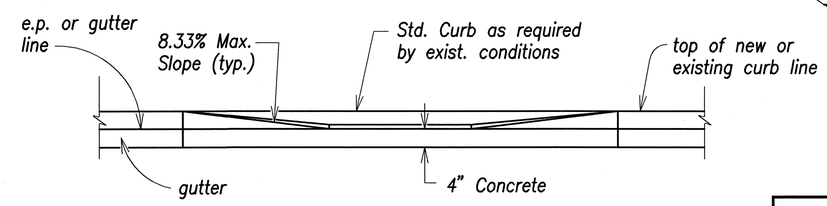

ELEVATION

CURB RAMP – TYPE "B"

SIDEWALK WIDTH 5'-0" OR GREATER
BUT LESS THAN 7'-0" WIDTH

CURB RAMP TYPE "B" MODIFIED

SIDEWALK WIDTH 7'-0" OR GREATER
BUT LESS THAN 12'-0" WIDTH

*See Curb Ramp Note No. 10

ORIGINAL PLAN | SURVEY PLOTTED BY | DRAWN BY | TRACED BY | DESIGNED BY | QUANTITIES BY | CHECKED BY | DATE | NOTE BOOK No.

GREG H. HIYAKUMOTO LICENSED PROFESSIONAL ENGINEER No. 6662-C HAWAII, U.S.A.

THIS WORK WAS PREPARED BY ME OR UNDER MY SUPERVISION

SIGNATURE 10/24/01 DATE

STATE OF HAWAII
DEPARTMENT OF TRANSPORTATION
HIGHWAYS DIVISION

CURB RAMP DETAILS – 3

NIMITZ HIGHWAY REHABILITATION
SUMNER STREET TO QUEEN STREET
F.A.I. Proj. No. NH-092-1(25)

Scale: Not to Scale Date: 10/19/01

SHEET No. C-65 OF 107 SHEETS

RMTC JOB NO.: 1-18681-0E

FED. ROAD DIST. NO.	STATE	FED. AID PROJ. NO.	FISCAL YEAR	SHEET NO.	TOTAL SHEETS
HAWAII	HAW.	NH-092-1(25)	2002	70	268

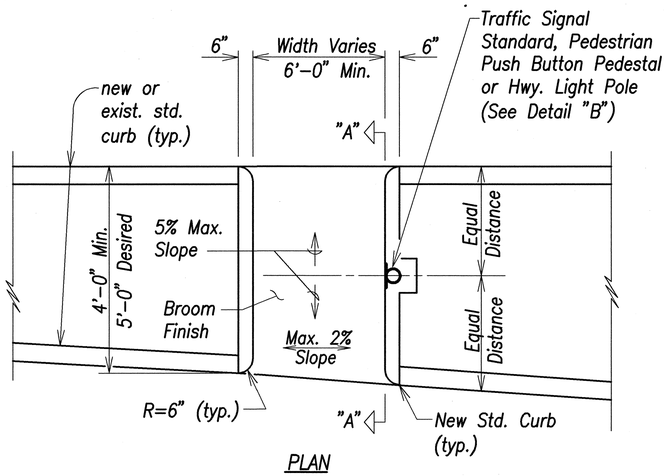

PLAN

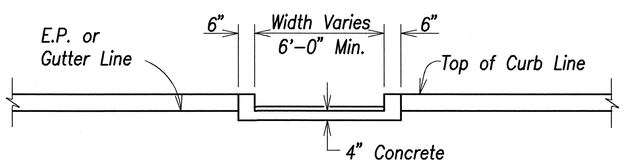

ELEVATION

CURB RAMP – TYPE "C"
USE AT MEDIAN CROSSINGS, ISLANDS

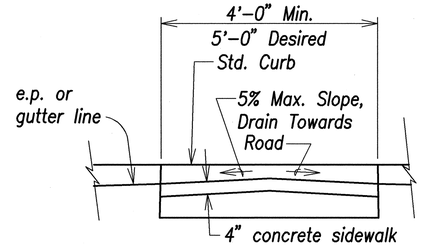

SECTION "A-A"

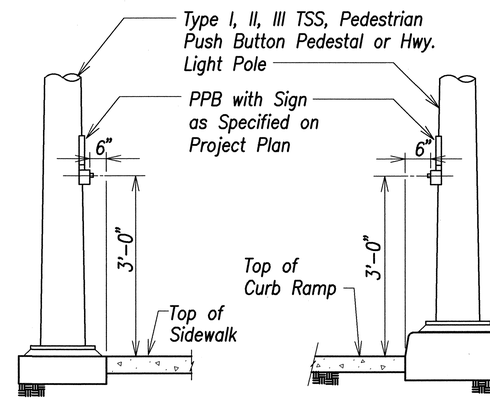

DETAIL "A" DETAIL "B"

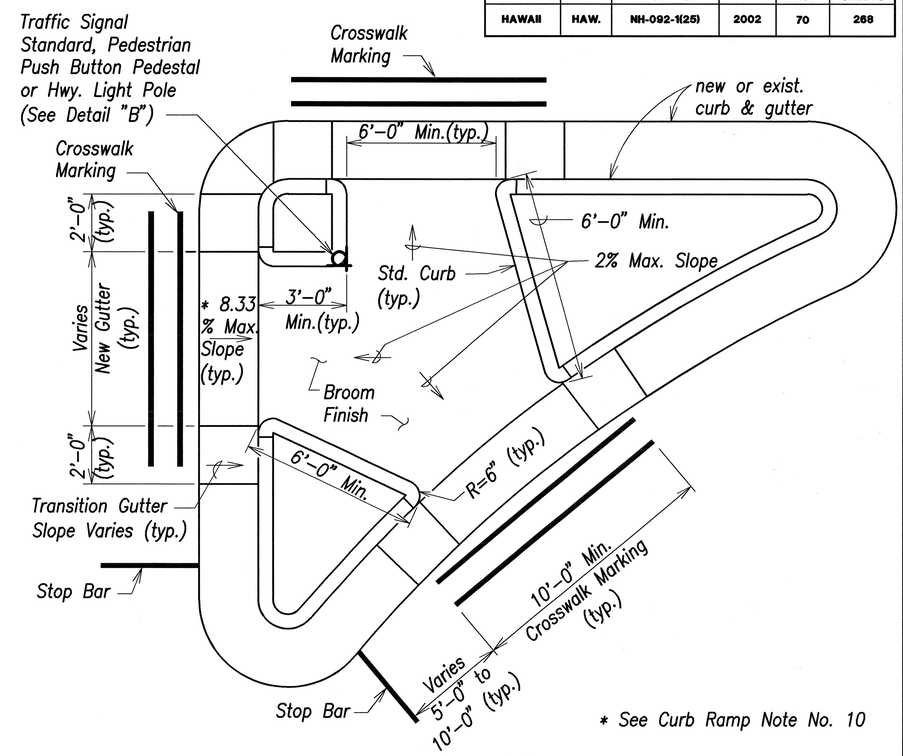

* See Curb Ramp Note No. 10

CURB RAMP – TYPE "C" MODIFIED

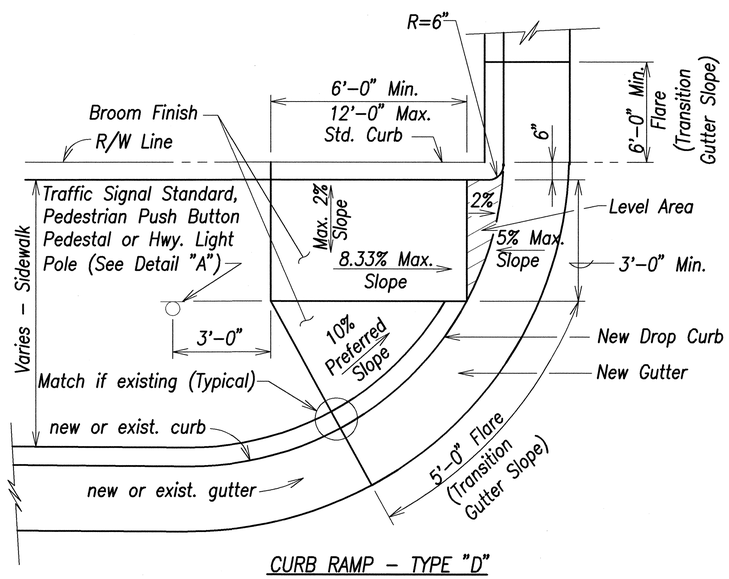

CURB RAMP – TYPE "D"

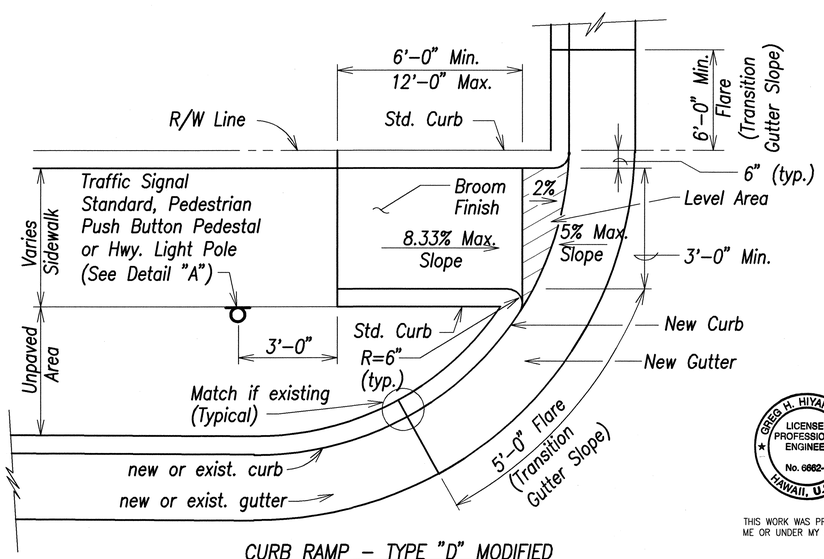

CURB RAMP – TYPE "D" MODIFIED

ORIGINAL PLAN	SURVEY PLOTTED BY	DATE
	DRAWN BY	
NOTE BOOK	TRACED BY	
	DESIGNED BY	
No.	QUANTITIES BY	
	CHECKED BY	

GREG H. HIYAKUMOTO
LICENSED PROFESSIONAL ENGINEER
No. 6662-C
HAWAII, U.S.A.

THIS WORK WAS PREPARED BY ME OR UNDER MY SUPERVISION

SIGNATURE DATE

STATE OF HAWAII
DEPARTMENT OF TRANSPORTATION
HIGHWAYS DIVISION

CURB RAMP DETAILS – 4

NIMITZ HIGHWAY REHABILITATION
SUMNER STREET TO QUEEN STREET
F.A.I. Proj. No. NH-092-1(25)

Scale: Not to Scale Date: 10/19/01

SHEET No. C-66 OF 107 SHEETS

RMTC JOB NO.: 1-18691-0E

FED. ROAD DIST. NO.	STATE	FED. AID PROJ. NO.	FISCAL YEAR	SHEET NO.	TOTAL SHEETS
HAWAII	HAW.	NH-092-1(25)	2002	71	268

* See Curb Ramp Note No. 10

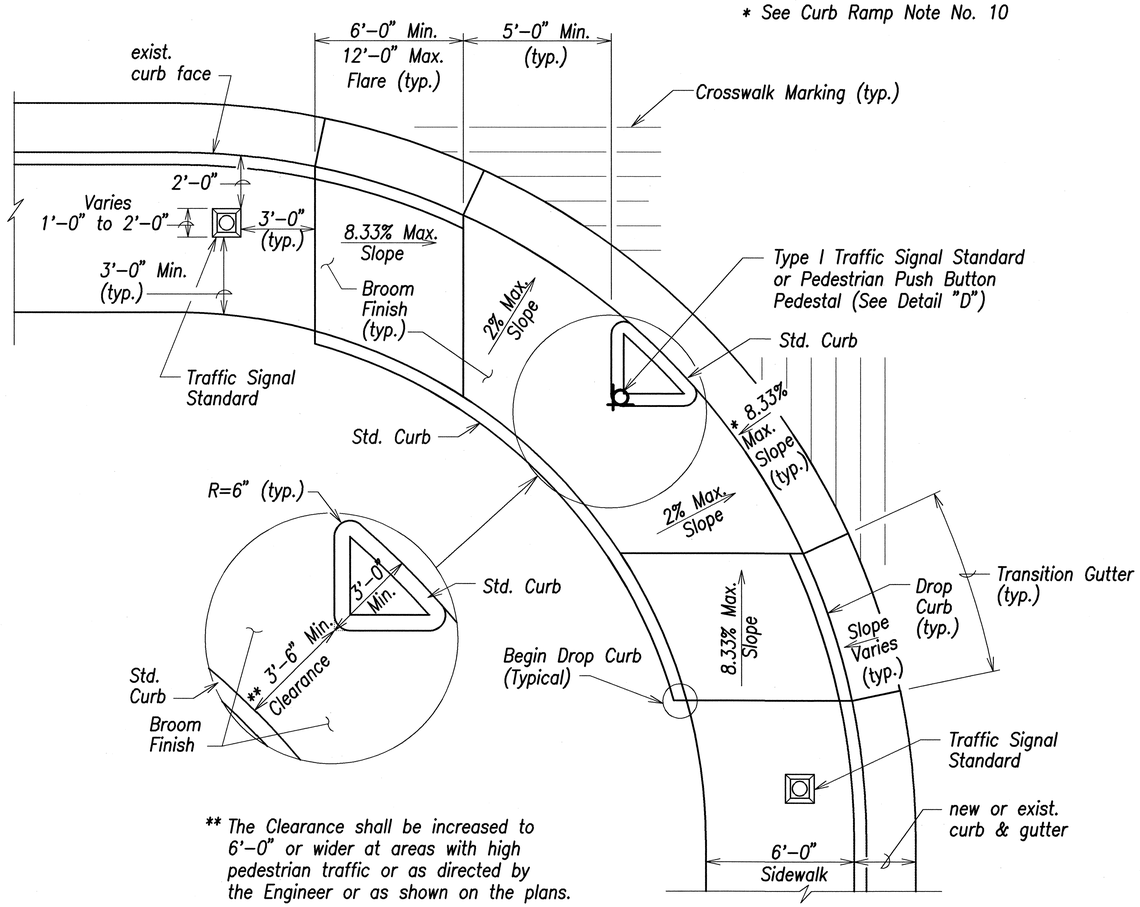

** The Clearance shall be increased to 6'-0" or wider at areas with high pedestrian traffic or as directed by the Engineer or as shown on the plans.

CURB RAMP – TYPE "E"

SIDEWALK WIDTH 7'-0" OR GREATER

(TO BE USED ONLY WITH TRAFFIC SIGNAL STANDARD OR PEDESTRIAN PUSH BUTTON PEDESTAL ON TRIANGULAR "ISLAND")

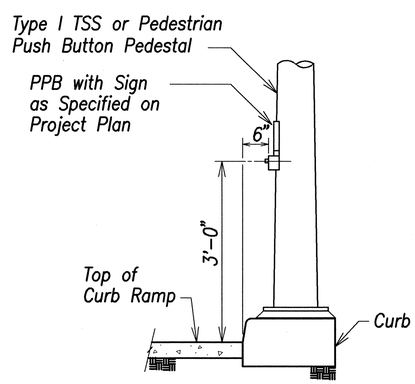

DETAIL "D"

Curb return type driveway may be permitted for parking areas exceeding 100 spaces, fire stations and hospitals.

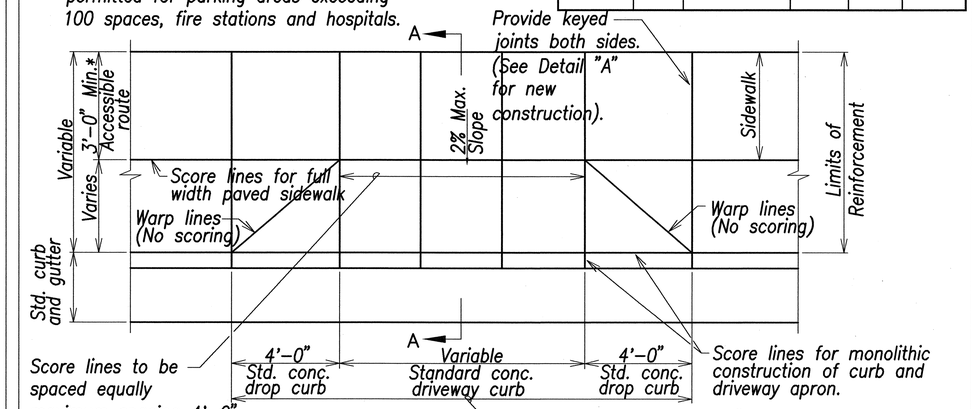

PLAN
NOT TO SCALE

Limits of reinforcement. 4" thick concrete reinforced with 6"x6"–W2.9XW2.9 galv. welded wire fabric for residential districts. 6" thick for all other districts. Surface shall be broom finished.

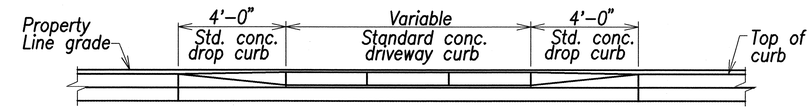

ELEVATION
NOT TO SCALE

* Match width of existing sidewalk whenever possible.
** Breakover and departure angles should not exceed 10 degrees or 17%.

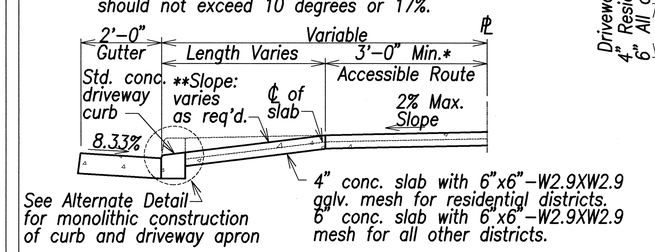

SECTION A–A
NOT TO SCALE

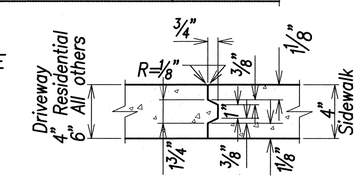

DETAIL "A"
NOT TO SCALE
(NEW CONSTRUCTION)

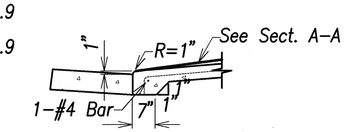

ALTERNATE DETAIL
NOT TO SCALE

DRIVEWAY APRON

NOTE:

For extension to existing driveway, scoring and finish shall match existing scoring and finish. For driveway constructed in built up areas, scoring conforming to scoring at adjacent driveways may be authorized.

GREG H. HIYAKUMOTO
LICENSED PROFESSIONAL ENGINEER
No. 6662-C
HAWAII, U.S.A.

THIS WORK WAS PREPARED BY ME OR UNDER MY SUPERVISION

SIGNATURE 10/19/01 DATE

STATE OF HAWAII
DEPARTMENT OF TRANSPORTATION
HIGHWAYS DIVISION

CURB RAMP DETAILS – 5

NIMITZ HIGHWAY REHABILITATION
SUMNER STREET TO QUEEN STREET
F.A.I. Proj. No. NH–092–1(25)

Scale: Not to Scale Date: 10/19/01

SHEET No. C-67 OF 107 SHEETS

ORIGINAL PLAN | SURVEY PLOTTED BY | DRAWN BY | TRACED BY | DESIGNED BY | QUANTITIES BY | CHECKED BY | DATE | NOTE BOOK No.

RMTC JOB NO.: 1-18681-0E

FED. ROAD DIST. NO.	STATE	FED. AID PROJ. NO.	FISCAL YEAR	SHEET NO.	TOTAL SHEETS
HAWAII	HAW.	NH-092-1(25)	2002	72	268

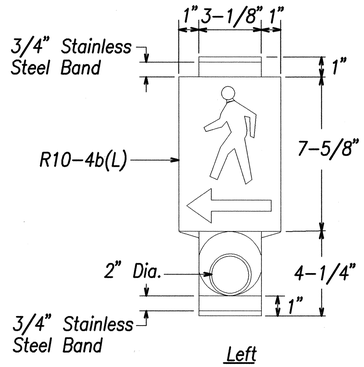

Left

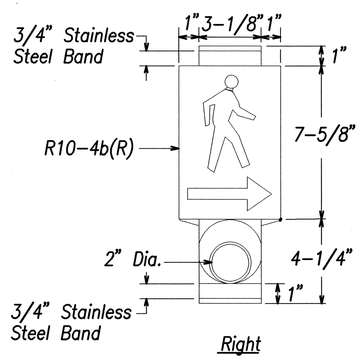

Right

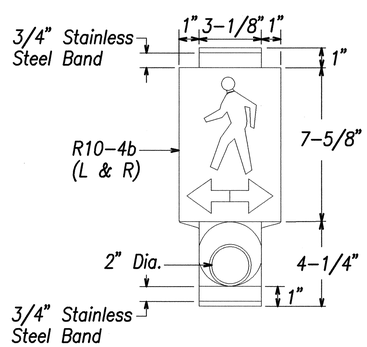

Left & Right

NOTE:
Arrowhead to be installed in proper direction.

PEDESTRIAN PUSH BUTTON WITH SIGN
Man, Arrow & Push Button – White
Background – Black

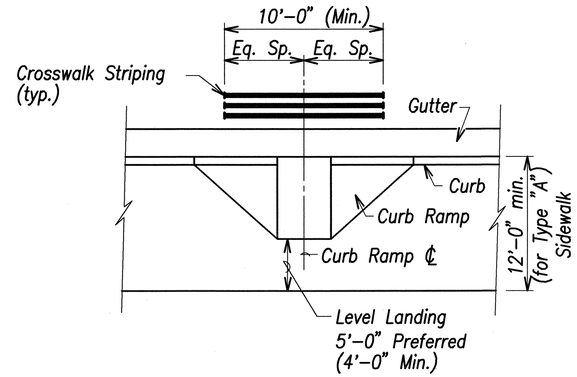

TYPICAL CROSSWALK STRIPING AT CURB RAMP

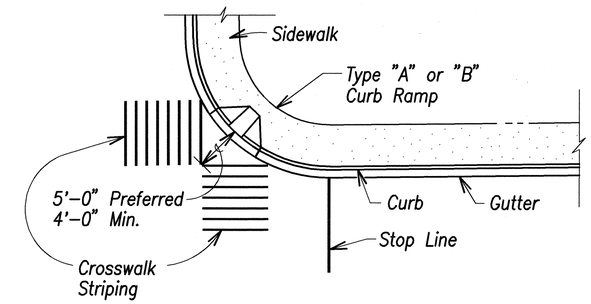

TYPICAL CROSSWALK STRIPING AT DIAGONAL CURB RAMP

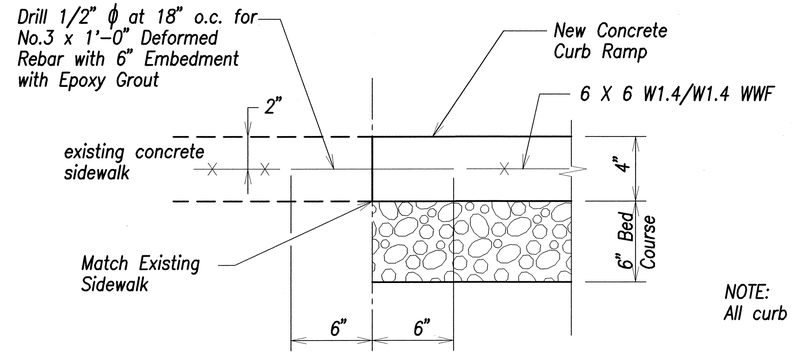

TYPICAL CONSTRUCTION JOINT AT EXISTING SIDEWALK

NOTE:
All curb ramps shall be reinforced.

ORIGINAL PLAN | SURVEY PLOTTED BY | DRAWN BY | TRACED BY | DESIGNED BY | QUANTITIES BY | CHECKED BY | DATE
NOTE BOOK No.

GREG H. HIYAKUMOTO
LICENSED PROFESSIONAL ENGINEER
No. 6662-C
HAWAII, U.S.A.

THIS WORK WAS PREPARED BY ME OR UNDER MY SUPERVISION

SIGNATURE 10/19/01 DATE

STATE OF HAWAII
DEPARTMENT OF TRANSPORTATION
HIGHWAYS DIVISION

CURB RAMP DETAILS – 6

NIMITZ HIGHWAY REHABILITATION
SUMNER STREET TO QUEEN STREET
F.A.I. Proj. No. NH-092-1(25)

Scale: Not to Scale Date: 10/19/01

SHEET No. C-68 OF 107 SHEETS

RMTC JOB NO.: 1-18681-0E