FED. ROAD DIST. NO.	STATE	FED. AID PROJ. NO.	FISCAL YEAR	SHEET NO.	TOTAL SHEETS
HAWAII	HAW.	NH-092-1(23)	1995	6	14

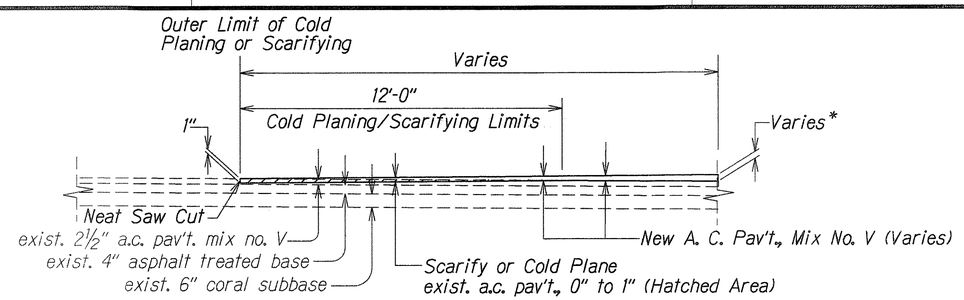

*See This Plan Sheet for New and Exist. Pav't. Elevations

SECTION (C)

Scale: 3/8" = 1'-0"

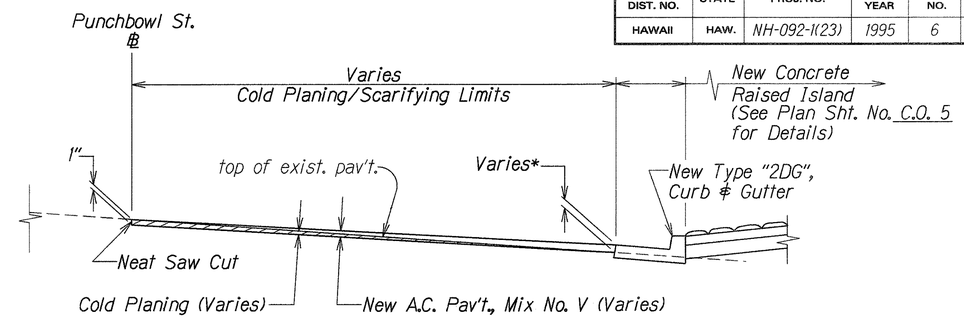

*See This Plan Sheet for New and Exist. Pav't. Elevations

SECTION (D)

Scale: Not to Scale

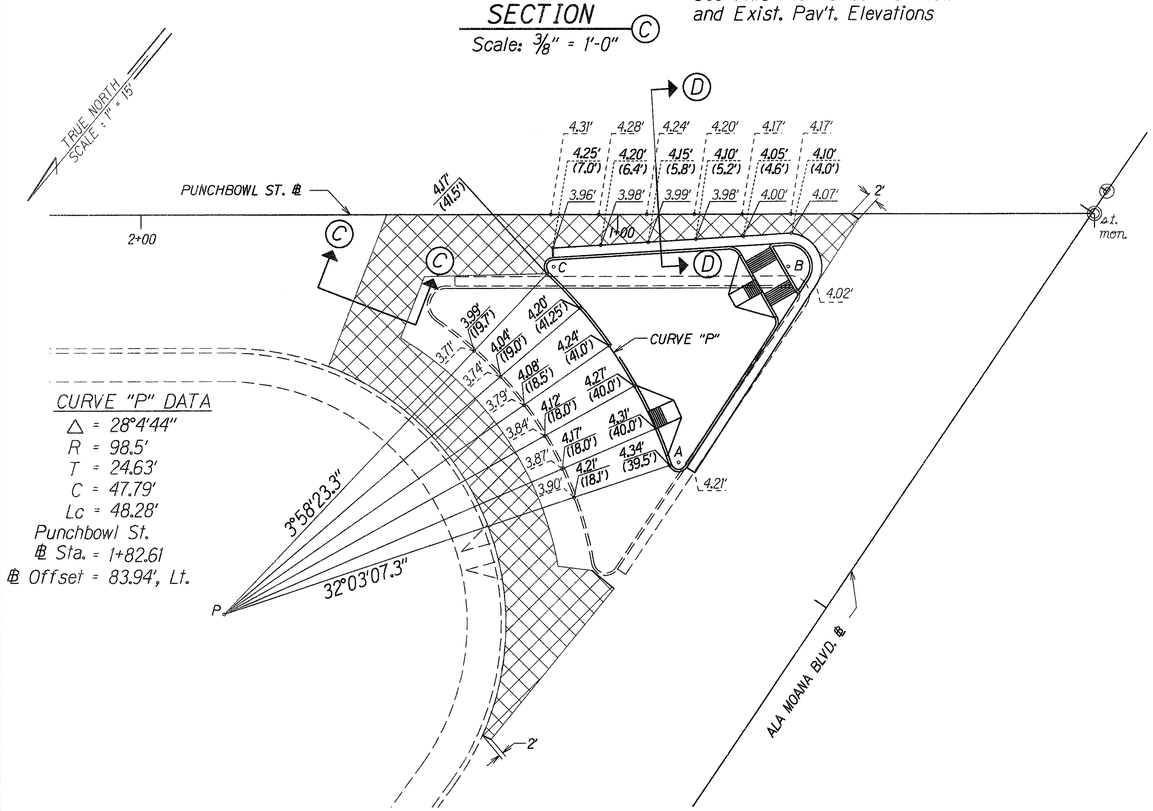

PAVEMENT GRADE PLAN
At Punchbowl St. ℄ Sta. 90+00± Lt.

Scale: 1" = 15.0'

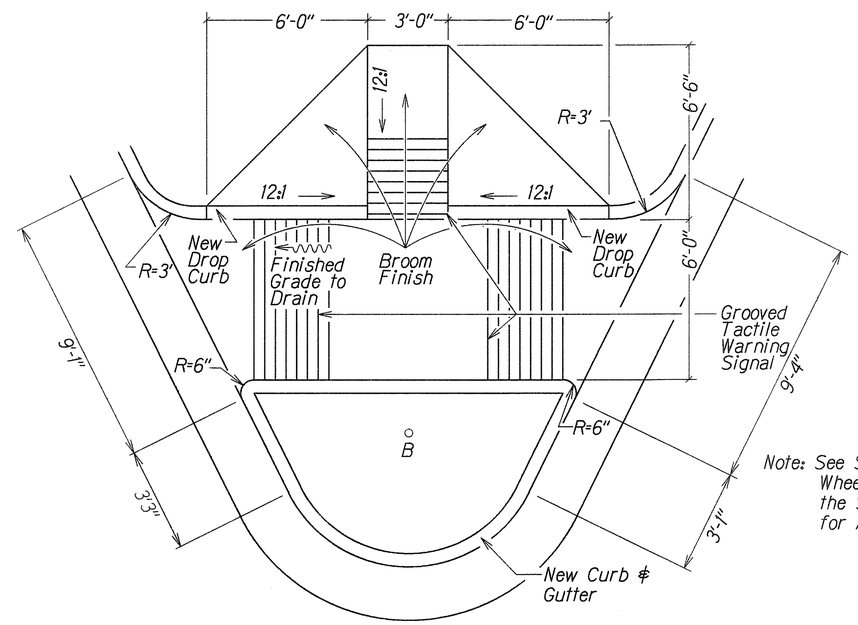

Note: See Section 650 - Wheelchair Ramps of the Special Provisions for Additional Details.

TYPE "AC" WHEELCHAIR RAMP

Scale: 3/8" = 1'-0"

LEGEND:

- Cold Planing or Scarifying Areas
- 4.17' — elevation at exist. top of pav't.
- 4.10' (4.0') — Elevation at New Top of Pav't. / Punchbowl St. Baseline Offset, Left
- 4.10' (4.0') — Elevation at New Top of Pav't. / Exist. Sidewalk Gutter Offset, Left

NEW ISLAND CURVE DATA			
	A	B	C
Δ	128°36'0.3"	126°23'51.6"	133°04'52.1"
R	2.00'	5.00'	2.00'
T	4.16'	9.90'	4.65'
C	3.60'	8.93'	3.67'
Lc	4.49'	11.03'	4.65'
Punchbowl St. ℄ Sta.	0+87.27	0+64.21	1+13.46
℄ Offset	52.14', Lt.	11.05', Lt.	11.01', Lt.

APPROVED FOR CONSTRUCTION WITHIN CITY RIGHT-OF-WAY ONLY

Chief, Division of Engineering, D.P.W. — DATE 3/21/95

DATE	REVISION
5/2/96	Deleted Raised Island Detail and Curb & Gutter Grade Plan. Added Pavement Grade Plan.

STATE OF HAWAII
DEPARTMENT OF TRANSPORTATION
HIGHWAYS DIVISION

ISLAND DETAILS

ALA MOANA BOULEVARD
Install Double Right-Turn Lanes
On Punchbowl Street
F. A. PROJECT NO. NH-092-1(23)

Scale: As Shown — Date: Sept., 1995

SHEET No. 1 OF 1 SHEETS

ORIGINAL PLAN — SURVEY PLOTTED BY — DRAWN BY — TRACED BY — DESIGNED BY — QUANTITIES BY — CHECKED BY — DATE 10/25/95 — NOTE BOOK — NO.

C.O. 6