FED. ROAD DIST. NO.	STATE	FED. AID PROJ. NO.	FISCAL YEAR	SHEET NO.	TOTAL SHEETS
HAWAII	HAW.	HES-002-1(19)	1985	9	22

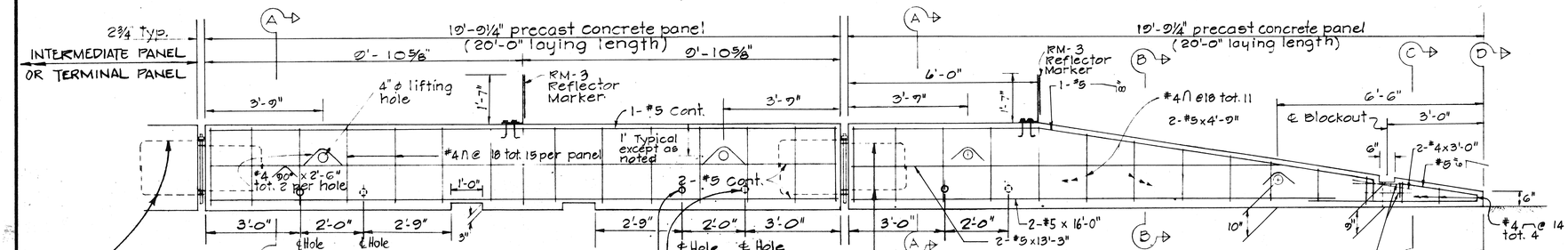

50% of all terminal panels to have connection bar arrangement as shown

TYPICAL INTERMEDIATE PANEL

Concrete: 1.93 c.y. per panel
Reinf: 160 lbs. per panel
Weight 3.9 tons per panel
Ground Anchorage Hole - near side
Ground Anchorage Hole - far side

ELEVATION
Scale: ½" = 1'-0"

TERMINAL PANEL

Concrete: 1.55 c.y. per panel
Reinf: 144 lbs. per panel
Weight: 3.1 tons per panel

50% of all terminal panels to have connection bar arrangement as shown

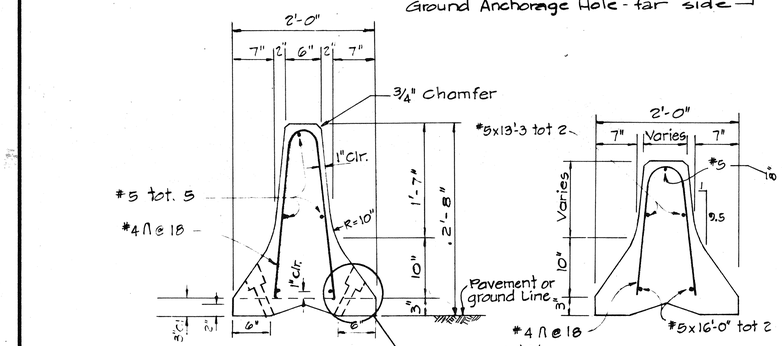

SECTION "A-A"

SECTION "B-B"

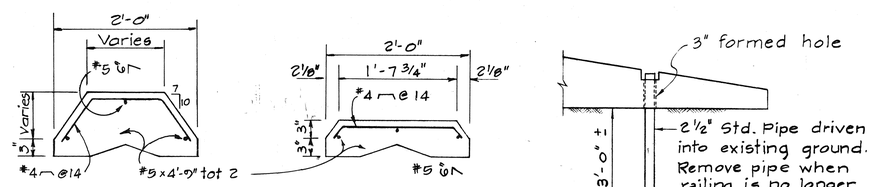

SECTION "C-C"

SECTION "D-D"

GROUND ANCHORAGE FOR RAMPED END OF TERMINAL PANEL
Scale: ½" = 1'-0"

SECTIONS
Scale: 1" = 1'-0"

NOTES

1. For details not shown in Sections B-B, C-C, & D-D, see Section A-A
2. Reflector Marker shall not be paid for separately but shall be considered incidental to "Portable Concrete Guard Rail."
3. Concrete shall be Class "A".
4. All bolts to have cut washers unless otherwise noted.

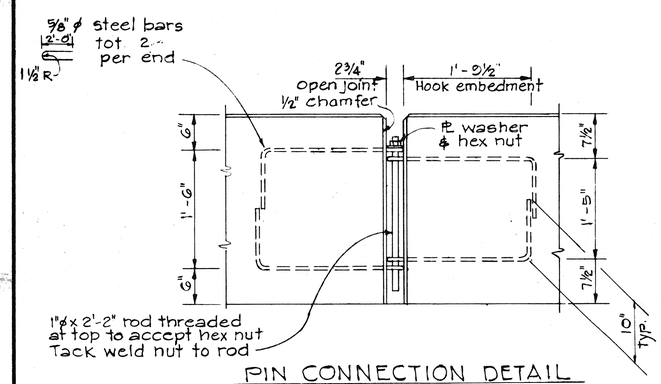

PIN CONNECTION DETAIL
Scale: 1" = 1'-0"

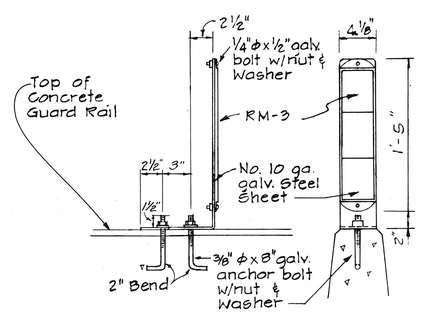

SIDE FRONT

REFLECTOR MARKER MOUNTING DETAIL
Scale: 1½" = 1'-0"

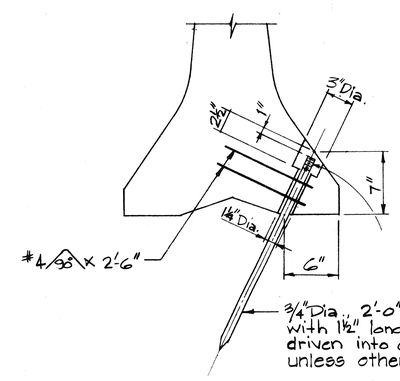

Protect threaded head with cap when driving steel pin. Threaded Head to facilitate pin removal.

DETAIL A - GROUND ANCHORAGE
Scale: 1½" = 1'-0"

STATE OF HAWAII
DEPARTMENT OF TRANSPORTATION
HIGHWAYS DIVISION

PORTABLE CONCRETE GUARD RAIL TYPICAL DETAILS

NIMITZ HIGHWAY
SAFETY IMPROVEMENTS
Westbound Lanes at Iwilei
F.A. Proj. No. HES-002-1(19)

Scale: As Noted Date: July, 1984

SHEET No. OF SHEETS

9

ORIGINAL PLAN	SURVEY PLOTTED BY	DATE
	DRAWN BY	
	TRACED BY	
NOTE BOOK	DESIGNED BY	
	QUANTITIES BY	
No.	CHECKED BY	